Scio Township Planning Commission Agenda
Ann Arbor, MI 48103
December 13, 2021, 7:00 PM

The Township Planning Commission will be meeting via Zoom, only. Members of the public may join via Zoom at https://us02web.zoom.us/j/82506038481 or http://zoom.us and entering Meeting ID 825 0603 8481 or by calling 1 312 626 6799 and entering Meeting ID 825 0603 8481. Persons with disabilities requiring any accommodation for participation in this meeting should contact the Township Clerk at (734) 369-9400 or clerk@sciotownship.org.

1) CALL TO ORDER

2) ROLL CALL

Culbertson, Cheng, Courteau, Hyde, Moore, Sharma, Holland,

3) ADOPTION OF AGENDA

4) COMMUNICATIONS/CORRESPONDENCE

The Commission will be advised of communications and correspondence received.

5) PRESENTATIONS REQUESTED BY THE PLANNING COMMISSION

NONE.

6) PUBLIC COMMENT

Citizens wishing to address the Planning Commission on matters which are not on the public hearing portion of the agenda or seek information on any other matters. Such oral presentations shall be limited to three (3) minutes except a representative or spokesperson of an organization shall have five (5) minutes to address the Commission.

7) BUSINESS SESSION

a) Advertised Public Hearings: The Chairperson will declare such a meeting open and state its purpose and rules of procedure for the hearing. The applicant will be heard first. The Planning Commission may or may not take formal action on this or these matters at this meeting.

None

b) Unfinished Business

1. SP # 19007, ET MacKenzie, site plan amendment,
2. SP# 21016, Scio Retail, new restaurant,
3. OA #21005 PUD/PSP #21012, Knights of Columbus

c) New Business

1. SP # 21019, Belmark/Tesla, dealership and service center,

8) REPORTS / COMMISSION ACTIVITY

1. Engineering Consultant – OHM
2. Planning Consultant – CWA
3. Chair Report – Culbertson
4. BOT Board of Trustees Report - Courteau
5. ZBA Zoning Board of Appeals - Culbertson
6. DDA – Holland
7. Road Commission Advisory Committee – Sharma
8. BOT Board of Trustees Report - Courteau
9. LPC Land Preservation Commission – Courteau
10. ZOA Zoning Ordinance Amendments - Cheng
11. Parks and Rec Advisory Board – Hyde
12. TAP committee – Cheng
13. HRWC – Hyde

9) APPROVAL OF MINUTES

1. Minutes of 2021-11-22, pending,

10) ADJOURNMENT

Specific items may be placed on the agenda by staff after consultation with the Commission Chairperson.

Jan Culbertson, Planning Commission Chair

Persons with disabilities are encouraged to participate. Accommodations, including sign language interpreters, may be arranged by contacting the Scio Township Clerk's Office at 734-369-9400 at least 7 days in advance.

Township of Scio

827 N. Zeeb Road · Ann Arbor, MI 48103
734/369-9400 · 734/665-0825 Fax
www.ScioTownship.org

Applications will not be processed until deemed complete.
Incomplete applications will be destroyed after 90 days.

SITE PLAN 19007

☐ ADMINISTRATIVE SITE PLAN
☒ FULL SITE PLAN
DATE 3-22-2019
PROPERTY ID NO. H-08-19-275-012
ZONING DISTRICT I-1

APPLICANT: RONALD W. CLARK
AGENT/DEVELOPER
4248 W. SAGINAW HWY.
STREET, NUMBER
GRAND LEDGE, MI 48837
CITY, STATE, ZIP
(517) 622-2117
PHONE
(517) 622-3799
FAX
rclark@mackenzieco.com
EMAIL

OWNER: E.T. MACKENZIE CO.
NAME
6400 JACKSON RD.
STREET, NUMBER
ANN ARBOR, MI 48103
CITY, STATE, ZIP
(734) 761-5050
PHONE
(734) 761-5323
FAX
rclark@mackenzieco.com
EMAIL

PROPOSED NAME OF DEVELOPMENT: E.T. MACKENZIE CO. OFFICE & SHOP
ADDRESS OF PROPERTY (OR POPULAR ADDRESS): 8197 JACKSON RD., ANN ARBOR, MI 48103
LEGAL DESCRIPTION: ☐ ATTACHED ☒ ON SITE PLAN
LOT SIZE: 5.43 ACRES (AREA) DEED RESTRICTIONS: ☒ NONE ☐ ATTACHED
DESCRIPTION OF PROPOSED USE: NEW OFFICE BUILDING. SHOP BUILDING & MATERIALS YARD IS EXISTING APPROVED CONDITIONAL USE.
STORIES: ☒ EXISTING ONE ☒ NEW ONE
SQ. FT.: ☐ ADDITION _____ ☒ NEW 2,400

SQ. FT. BY USE:
☐ COMMERCIAL _____
☒ OFFICE NEW 2,400
☐ WAREHOUSE _____
☐ MANUFACTURING _____
☒ OTHER SHOP - EXISTING 4,200

SANITARY FACILITIES: ☒ SEWER ☐ SEPTIC
WATER: ☒ MUNICIPAL ☐ PRIVATE WELL

I AGREE TO GIVE PERMISSION FOR OFFICIALS OF SCIO TOWNSHIP TO ENTER THE PROPERTY SUBJECT TO THIS APPLICATION FOR PURPOSES OF INSPECTION.

☒ *Property owner authorization letter attached.*

Ronald W. Clark — 3-22-19
SIGNATURE OF APPLICANT — DATE

[signature] — 3/22/19
SIGNATURE OF OWNER — DATE

RONALD W. CLARK
PRINT NAME

Michael S. Marks President
PRINT NAME/TITLE

#1 20190417 #134537 $500.00 1/2 **FOR OFFICE USE ONLY** FEES $1620.00 2/2

THIS APPLICATION HAS BEEN REVIEWED FOR COMPLIANCE WITH THE TOWNSHIP ZONING ORDINANCE, AND FOR ACCURACY OF PROPERTY DESCRIPTION:

#5 20211025 #142880 $250 1/2 FEES $275 2/2

#2 7-25-19 #135328 $250 & #810
#3 20190918 #135962 $250.00 FEES $810 2/2
#4 20191101 #136513 $500.00 1/2 1/2 FEES $1996.00 2/2

_____ ORDINANCE ADMINISTRATOR _____ DATE

PLANNING COMMISSION ACTION:
☐ APPROVED, DATE _____
☐ DENIED, DATE _____

TOWNSHIP BOARD:
☐ APPROVED, DATE _____
☐ DENIED, DATE _____

APPLICATION RECEIVED DATE: _____
FEE RECEIVED: CASH _____ CHECK _____
SP _____ DATE _____
SW _____
WA _____

EXPIRATION DATE: _____

E.T. MacKenzie Company
One of The MacKenzie Companies

Contracting & Consulting

RECEIVED BY
AUG 14 2020
SCIO TOWNSHIP

August 11, 2020

Scio Township Board of Trustees and
Scio Township Planning Commission
827 N. Zeeb Road
Ann Arbor, MI 48103-1599

RE: Final Site Plan Approval Extension of Site Plan #19007 for Proposed E. T. MacKenzie Co. Office Building at 8197 Jackson Road, Ann Arbor, MI

Honorable Trustees and Commissioners:

The E. T. MacKenzie Company respectfully requests a one year time extension for the Final Site Plan approval for our proposed new office building at the above address. The Zoning Compliance Certificate #20070 for Commercial/Industrial Construction was issued on March 5, 2020 after our Preconstruction Meeting on 3-4-20. Therefore, our request is to extend the time period to start construction on the project until March 5, 2022.

The reason for our request is due to the economic uncertainty created by the coronavirus pandemic. At this time it impossible to tell what the construction industry will be like after the winter of this year.

We are available to present in person our request to the Commission and the Board at an upcoming meeting if that is required. If you have any questions or need additional information regarding our request, please contact me at your earliest convenience. My direct dial number is (517) 622-2117. Thank you for your assistance in our endeavors to plan for the future of our company in your community.

Sincerely,
E. T. MacKenzie Company

Ronald W. Clark

Ronald W. Clark

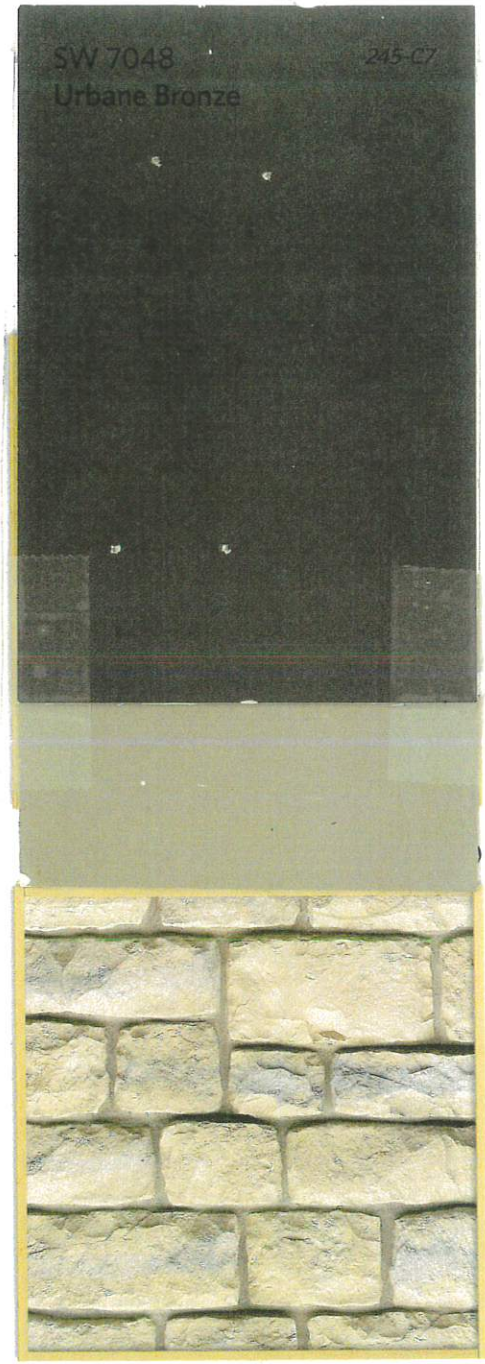

ET MacKenzie + Co

Carlisle | Wortman
ASSOCIATES, INC.

117 NORTH FIRST STREET SUITE 70 ANN ARBOR, MI 48104 734.662.2200 734.662.1935 FAX

MEMORANDUM

TO: Scio Township Planning Commission

FROM: Douglas J. Lewan, Township Planner
Laura K. Kreps, Township Planner

DATE: November 9, 2021

RE: ET Mackenzie Site Plan Revision (SP/DE #19007)

E.T. Mackenzie is requesting review of two (2) amendments to their approved site plan for the new office building located at 8197 Jackson Road.

1. The Planning Commission consider eliminating the screening buffer requirement along the eastern property line. At the time of site plan review, the adjacent agriculturally zoned property was vacant and for sale/rent as a single-family home. Since that time, a landscape contractor is utilizing the site for their business which includes an outdoor storage yard and parking area for cars and construction equipment. A similar use to the use of the subject site. The applicant has provided a revised landscape plan demonstrating the removal of the previously approved fence along the eastern property line. Proposed landscape plantings will remain. Section 36-345(b)(12) allows the Planning Commission to waive or modify landscaping requirements.
2. The applicant is requesting deferment on the installation of the sidewalk across the frontage of the property and the lead walk from the public sidewalk to the main entry of the office building. The Planning Commission may consider the applicant provide payment in lieu of construction of the walk to in an amount provided by the applicant.

Additional discussion on the E.T. Mackenzie site plan amendment requests will be conducted during the Planning Commission meeting.

CARLISLE/WORTMAN ASSOC., INC.
Douglas J. Lewan, AICP
Executive Vice President

CARLISLE/WORTMAN ASSOC., INC.
Laura K. Kreps, AICP
Senior Associate

File: 124-1909

Richard K. Carlisle, *President* Douglas J. Lewan, *Executive Vice President*
John L. Enos, *Principal* David Scurto, *Principal* Benjamin R. Carlisle, *Principal* Sally M. Elmiger, *Principal* Craig Strong, *Principal*
Laura K. Kreps, *Senior Associate* Paul Montagno, *Associate*

OHM
Advancing Communities®

September 16, 2021

John Niemiec **(Via E-mail)**
ET MacKenzie Company
4248 W Saginaw Highway
Grand Ledge, MI 48837

Regarding: ET MacKenzie Office Building
OHM Job No. 0159-19-1063
Record Plan Request

Dear Mr. Niemiec:

The preparation and submittal of record plans for the referenced project is now being requested from your engineer. Construction Daily Reports, Grading Certificate form, and record plan check list are attached to this email for the engineer's use.

Additionally, as-built GIS data points have also been included for the engineer's use in preparing record plans. It is recommended the engineer topographically verify the GIS elevation data for all visible structures, appurtenances, and site features. To ensure the timely completion of close out items, the design engineer is requested to forward the initial record plan to our office by November 16, 2021, for review.

The initial submittal shall consist of:

- one (1) record plan bond set along with one (1) USB flash drive containing both AutoCAD and pdf formats. *The design engineer shall note that AutoCAD drawings shall be in state-plane coordinates.*
- applicable easements
- return of the signed and sealed Grading Certificate.

If there are any questions or comments, please contact this office at the number shown below.

Sincerely,
OHM Advisors

Chris S. Donajkowski
Field Representative

P:\0126_0165\SITE_ScioTwp\2019\0159191060_ET Mackenzie_CONST\Record Plans\Review 1\Submittal

OHM Advisors
34000 PLYMOUTH ROAD
LIVONIA, MICHIGAN 48150
T 734.522.6711
F 734.522.6427
OHM-Advisors.com

cc: Will Hathaway, Scio Township Supervisor (via e-mail)
Steve Wyzgoski, Scio Township, Utilities Director (via e-mail)
Rich Hughes, Scio Township, Utilities Field Supervisor (via e-mail)
Frances Szuma, Scio Township Planning Coordinator (via e-mail)
Kristy Aiken, Scio Township Office Coordinator (via e-mail)
Jessica Flintoft, Scio Township Clerk (via e-mail)
Donna Palmer, Scio Township Treasurer (via e-mail)
Shawn Slane, Scio Township Utilities (via e-mail)
Doug Lewan, CWA, Scio Township Planner (via e-mail)
Laura Kreps, CWA, Scio Township Planner (via e-mail)
Greg Petru, KEBS Inc, Design Engineer (via e-mail)
Matt Parks, P.E., OHM (via e-mail)
Sally Bos, P.E., OHM (via e-mail)
File

Frances Szuma

From: Jon Ichesco
Sent: Tuesday, September 24, 2019 3:42 PM
To: Frances Szuma; Kristy Aiken; Doug Lewan; Sally Bos; Laura Kreps @CWA; Matt Parks
Cc: Bryce Kelley; Scott D. Martin; Doug Armstrong
Subject: SP#19007 ET Mackenzie 2019-09-18

Frances,

Fire Services approved SP#19007 E T Mackenzie submitted on 09-18-2019.

Jon Ichesco
Director of Fire Services

CONSULTING GROUP

June 28, 2019

Mr. John Niemiec
E.T. MacKenzie Company
6400 Jackson Road
Ann Arbor, Michigan 48103

RE: Letter of Infiltration Evaluation
Proposed Scio Township Infiltration Testing
8197 Jackson Road
Scio Township, Washtenaw County, Michigan
G2 Project No. 193146

Dear Mr. Niemiec,

In accordance with your request, we have completed the infiltration evaluation for the proposed development to be constructed at the aforementioned address. The proposed project includes the construction of a single-story office as well as associated pavements and utilities. To accommodate the increase in collected stormwater as a result of the new impervious areas, a stormwater management area will be used to reintroduce the collected stormwater into the natural water cycle by means of subsurface infiltration.

We conducted our infiltration evaluation in general accordance with the Washtenaw County Water Resource Commissioner (WCWRC) revised "Rules and Guidelines – Procedures & Design Criteria for Stormwater Management Systems" dated October 17, 2016. The purpose of our infiltration investigation is to determine the infiltration rates within the area of the proposed stormwater management structures for use in design.

FIELD OPERATIONS

E.T. MacKenzie Company selected the number, depth, and location of the test pits. The locations of the test pits were verified in the field by a G2 engineer. The approximate locations of the test pits are shown in Test Pit Location Plan, Plate, No. 1. The ground surface elevation at the test pit locations was approximated based on the topographic site plan provided by John Niemiec in an email dated June 25, 2019. The longitude and latitudes indicated in the Test Pit Logs, Figures 1 through 7, were approximated using Google Earth.

The test pits were excavated by E.T. MacKenzie Company using a backhoe with a 42-inch bucket. Within each test pit, Ryan Carpus of G2 Consulting Group, LLC maintained logs of the encountered subsurface conditions including changes in stratigraphy and observed groundwater levels. The test pit logs are based on the results of the field and laboratory soil classification and testing.

FIELD AND LABORATORY TESTING

Due to the presence of cohesive soils and shallow water table levels at the anticipated base elevation of the proposed detention basin, no infiltration testing was performed during our field investigation. Representative soil samples were subjected to laboratory testing to determine soil parameters pertinent to on-site infiltration. Soil samples obtained in the field were stored in sealed bags and transported to

our Ann Arbor office for laboratory testing and classification. An experienced geotechnical engineer classified the soils in general conformance with the Unified Soil Classification System. Laboratory testing included natural moisture content and unconfined compressive strength determinations. The unconfined compressive strengths were determined by using a spring-loaded hand penetrometer. The hand penetrometer estimates the unconfined compressive strength to a maximum of 4-1/2 tons per square foot (tsf) by measuring the resistance of the soil sample to the penetration of a calibrated spring-loaded cylinder.

The results of the field and laboratory testing are indicated on the test pit logs at the depths samples were taken. The test pit logs are presented on Figure Nos. 1 through 5. We will hold the soil samples for a period of 60 days following the issuance of this report. If you would like the samples retained beyond this period, or if you would like the samples returned to you, please let us know.

SITE CONDITIONS

The site is a commercially developed property, mostly consisting of gravel roads and a garage, with a few other small structures. The property lies within the Honey Creek Basin and is part of the Huron watershed. Site grades are generally flat with slight variances, except for a drainage ditch on the west side of the property roughly 2 to 3 feet deep. Beyond the development limits, the surrounding properties are commercial to the north-east, agricultural to the south, west, and north, and undeveloped to the east.

SOIL AND GROUNDWATER CONDITIONS

Approximately 4 to 8 inches of sandy clay topsoil are present at the ground surface of test pits TP-1 through TP-5. Granular soils consisting of gravelly sand and clayey sand underlie the topsoil in test pits TP-2 through TP-5 to depths between 1-1/2 and 2-1/2 feet. Cohesive soils consisting of sandy clay and silty clay underlie the topsoil in TP-1 and the granular material in TP-2 through TP-5 to depths between 4 and 6 feet. The native cohesive soils are medium to hard in consistency with natural moisture contents ranging from 11 to 18 percent and unconfined compressive strengths ranging from 1000 to 9000 pounds per square foot (psf). Granular soils consisting of clayey sand, silty sand, and sandy silt are present below the clay soils within test pits TP-1 through TP-4 and extend to the explored depths between 5 and 7-1/2 feet.

Groundwater was observed during excavation operations within test pits TP-1 through TP-4 between 4 and 7 feet below the ground surface. Fluctuations in long-term groundwater levels should be anticipated due to seasonal variations and following periods of prolonged precipitation.

INFILTRATION CONSIDERATIONS

The following table provides the results of our observations during test pit operations:

Test Pit No.	Soil Type (USCS)	Excavation Depth (ft)	Groundwater Depth (ft)	Infiltration Rate (iph)
TP-1	CLS	5	4	‡---
TP-2	CL-ML	5.5	5	‡---
TP-3	CLS	5	4	‡---
TP-4	CLS	7.5	7	‡---
TP-5	CLS	6	---	‡---

Notes: ‡Due to the presence of cohesive soils near the test elevation, no infiltration testing was conducted.

The soils present at the anticipated base elevation of the proposed detention basin are not conducive to infiltration; therefore, we recommend an alternative approach to on-site stormwater management be evaluated or that the stormwater management structures be sized properly to accommodate the stormwater flow associated with the design rainfall event.

GENERAL COMMENTS

If changes occur in the design, location, or concept of the project, conclusions and recommendations contained in this report are not valid unless G2 Consulting Group, LLC reviews the changes. G2 Consulting Group, LLC will then confirm any assumptions regarding the project scope presented herein or make changes in writing. The scope of the present investigation was limited to evaluation of subsurface conditions at the proposed test pit locations. No chemical or environmental testing or analyses were included in the scope of this investigation.

We base the analyses and recommendations submitted in this report upon the data from the test pits performed at the approximate locations shown on the Test Pit Location Plan, Plate No. 1. This report does not reflect variations that may occur between the actual test pit location and the actual infiltration basin location. The nature and extent of any such variations may not become clear until the time of construction. We recommend G2 Consulting Group, LLC observe all geotechnical related work, including subgrade preparation and engineered fill placement.

We appreciate the opportunity to be of service to you on this project and look forward to discussing the results presented. In the meantime, if you have any questions regarding this report or any other matter pertaining to the project, please call us.

Sincerely,

G2 Consulting Group, LLC

Ryan Carpus
Staff Engineer

Jason B. Stoops, P.E.
Office Manager / Project Manager

Encl:
- Test Pit Location Plan — Plate No. 1
- Test Pit Logs — Figure Nos. 1-5
- General Notes Terminology — Figure No. 6

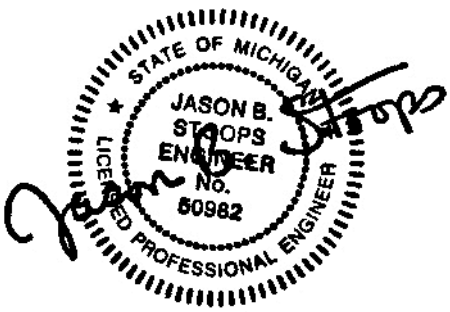



Legend

Test Pits Performed by E.T. Mackenzie Company on June 27, 2019

Test Pit Location Plan		
Scio Twp Infiltration Testing 8197 Jackson Road Scio Township, Michigan 48103		
2G CONSULTING GROUP	Project No. 193146	
	Drawn by: RPC	
	Date:6-27-2019	Plate No. 1
	Scale: NTS	

Project Name: Proposed Scio Twp Infiltration Testing

Project Location: 8197 Jackson Road
Scio Twp, Washtenaw County, Michigan

G2 Project No. 193146

Latitude: 42.290363° Longitude: -83.891121°

Test Pit No. TP-1

CONSULTING GROUP

SUBSURFACE PROFILE

SOIL SAMPLE DATA

ELEV. (ft)	PRO-FILE	GROUND SURFACE ELEVATION: 890.0 ft ±	DEPTH (ft)	SAMPLE TYPE/NO.	DRY DENSITY (PCF)	MOISTURE CONTENT (%)	PERCENT COMPACTION	UNCOF. COMP. ST. (PSF)
		Topsoil: Brown Sandy Clay (8 inches)						
		0.7						
		Medium Brown Sandy Clay with trace gravel		S-1		17.1		1500*
		4.0						
		Wet Brown Clayey Sand		S-2				
885.0		5.0	5					
		End of Test Pit @ 5 ft						
880.0			10					

Total Depth: 5 ft
Excavation Date: June 27, 2019
Inspector: R. Carpus
Contractor: E.T. Mackenzie Company
Operator: Ron

Excavation Equipment:
Excavator equipped with 42-inch bucket

Water Level Observation:
Groundwater encountered at 4 feet during and upon completion of excavation operations

Notes:
* Calibrated Hand Penetrometer

Excavation Backfilling Procedure:
Test pit backfilled with excavated soil

TEST PIT 193146.GPJ 20150116 G2 CONSULTING DATA TEMPLATE.GDT 6/28/19

Figure No. 1

Project Name: Proposed Scio Twp Infiltration Testing

Project Location: 8197 Jackson Road
Scio Twp, Washtenaw County, Michigan

G2 Project No. 193146

Latitude: 42.290899° Longitude: -83.891191°

Test Pit No. TP-2

G2 CONSULTING GROUP

SUBSURFACE PROFILE

SOIL SAMPLE DATA

ELEV. (ft)	PRO-FILE	GROUND SURFACE ELEVATION: 894.0 ft ±	DEPTH (ft)	SAMPLE TYPE/NO.	DRY DENSITY (PCF)	MOISTURE CONTENT (%)	PERCENT COMPACTION	UNCOF. COMP. ST. (PSF)
		Topsoil: Brown Sandy Clay (8 inches)						
		0.7						
		Brown Gravelly Sand with trace silt		S-1				
		1.5						
		Hard Brown Silty Clay		S-2		12.5		8000*
		3.0						
		Stiff Brown Silty Clay		S-3				2000*
889.0		5.0	5					
		Wet Brown Silty Sand		S-4				
		5.5						
		End of Test Pit @ 5.5 ft						
884.0			10					

Total Depth: 5.5 ft
Excavation Date: June 27, 2019
Inspector: R. Carpus
Contractor: E.T. Mackenzie Company
Operator: Ron

Excavation Equipment:
Excavator equipped with 42-inch bucket

Water Level Observation:
Groundwater encountered at 4 feet during and upon completion of excavation operations

Notes:
* Calibrated Hand Penetrometer

Excavation Backfilling Procedure:
Test pit backfilled with excavated soil

TEST PIT 193146.GPJ 20150116 G2 CONSULTING DATA TEMPLATE.GDT 6/28/19

Figure No. 2

Project Name: Proposed Scio Twp Infiltration Testing

Project Location: 8197 Jackson Road
Scio Twp, Washtenaw County, Michigan

G2 Project No. 193146

Latitude: 42.291391° Longitude: -83.891166°

Test Pit No. TP-3

G2 CONSULTING GROUP

SUBSURFACE PROFILE

SOIL SAMPLE DATA

ELEV. (ft)	PRO-FILE	GROUND SURFACE ELEVATION: 897.0 ft ±	DEPTH (ft)	SAMPLE TYPE/NO.	DRY DENSITY (PCF)	MOISTURE CONTENT (%)	PERCENT COMPACTION	UNCOF. COMP. ST. (PSF)
		Topsoil: Brown Sandy Clay (6 inches)						
		0.5						
		Brown Clayey Sand		S-1				
		2.5						
		Medium Brown Sandy Clay		S-2		17.8		1000*
		4.0						
		Wet Brown Sand with trace silt		S-3				
892.0		5.0	5					
		End of Test Pit @ 5 ft						
887.0			10					

Total Depth: 5 ft
Excavation Date: June 27, 2019
Inspector: R. Carpus
Contractor: E.T. Mackenzie Company
Operator: Ron

Excavation Equipment:
Excavator equipped with 42-inch bucket

Water Level Observation:
Groundwater encountered at 4 feet during and upon completion of excavation operations

Notes:
* Calibrated Hand Penetrometer

Excavation Backfilling Procedure:
Test pit backfilled with excavated soil

TEST PIT 193146.GPJ 20150116 G2 CONSULTING DATA TEMPLATE.GDT 6/28/19

Figure No. 3

Project Name: Proposed Scio Twp Infiltration Testing

Project Location: 8197 Jackson Road
Scio Twp, Washtenaw County, Michigan

G2 Project No. 193146

Latitude: 42.291939° Longitude: -83.891193°

Test Pit No. TP-4

G2 CONSULTING GROUP

SUBSURFACE PROFILE

SOIL SAMPLE DATA

ELEV. (ft)	PRO-FILE	GROUND SURFACE ELEVATION: 901.0 ft ±	DEPTH (ft)	SAMPLE TYPE/NO.	DRY DENSITY (PCF)	MOISTURE CONTENT (%)	PERCENT COMPACTION	UNCOF. COMP. ST. (PSF)
		Topsoil: Brown Sandy Clay (6 inches)						
			0.5					
		Brown Gravelly Sand with trace silt		S-1				
			2.5	S-2		11.2		9000*
		Hard Brown Sandy Clay						
			3.5	S-3				1000*
		Medium Brown Sandy Clay						
			4.5					
896.0			5	S-4				
		Brown Sandy Silt						
			7.5					
891.0		End of Test Pit @ 7.5 ft	10					

Total Depth: 7.5 ft
Excavation Date: June 27, 2019
Inspector: R. Carpus
Contractor: E.T. Mackenzie Company
Operator: Ron

Excavation Equipment:
Excavator equipped with 42-inch bucket

Water Level Observation:
Groundwater encountered at 7 feet during and upon completion of excavation operations

Notes:
* Calibrated Hand Penetrometer

Excavation Backfilling Procedure:
Test pit backfilled with excavated soil

TEST PIT 193146.GPJ 20150116 G2 CONSULTING DATA TEMPLATE.GDT 6/28/19

Figure No. 4

Project Name: Proposed Scio Twp Infiltration Testing

Project Location: 8197 Jackson Road
Scio Twp, Washtenaw County, Michigan

G2 Project No. 193146

Latitude: 42.292625° Longitude: -83.891220°

Test Pit No. TP-5

G2 CONSULTING GROUP

ELEV. (ft)	PRO-FILE	GROUND SURFACE ELEVATION: 906.0 ft ±	DEPTH (ft)	SAMPLE TYPE/NO.	DRY DENSITY (PCF)	MOISTURE CONTENT (%)	PERCENT COMPACTION	UNCOF. COMP. ST. (PSF)
		Topsoil: Brown Sandy Clay (4 inches)						
			0.3					
		Dark Brown Silty Sand		S-1				
			1.5					
		Very Stiff Brown Sandy Clay		S-2		14.0		5000*
901.0			5					
			6.0					
		End of Test Pit @ 6 ft						
896.0			10					

SUBSURFACE PROFILE

SOIL SAMPLE DATA

Total Depth: 6 ft
Excavation Date: June 27, 2019
Inspector: R. Carpus
Contractor: E.T. Mackenzie Company
Operator: Ron

Excavation Equipment:
Excavator equipped with 42-inch bucket

Water Level Observation:
Dry during and upon completion of excavation operations

Notes:
* Calibrated Hand Penetrometer

Excavation Backfilling Procedure:
Test pit backfilled with excavated soil

TEST PIT 193146.GPJ 20150116 G2 CONSULTING DATA TEMPLATE.GDT 6/28/19

Figure No. 5

GENERAL NOTES TERMINOLOGY

Unless otherwise noted, all terms herein refer to the Standard Definitions presented in ASTM 653.

PARTICLE SIZE

Boulders		- greater than 12 inches
Cobbles		- 3 inches to 12 inches
Gravel	- Coarse	- 3/4 inches to 3 inches
	- Fine	- No. 4 to 3/4 inches
Sand	- Coarse	- No. 10 to No. 4
	- Medium	- No. 40 to No. 10
	- Fine	- No. 200 to No. 40
Silt		- 0.005mm to 0.074mm
Clay		- Less than 0.005mm

CLASSIFICATION

The major soil constituent is the principal noun, i.e. clay, silt, sand, gravel. The second major soil constituent and other minor constituents are reported as follows:

Second Major Constituent (percent by weight)	Minor Constituent (percent by weight)
Trace - 1 to 12%	Trace - 1 to 12%
Adjective - 12 to 35%	Little - 12 to 23%
And - over 35%	Some - 23 to 33%

COHESIVE SOILS

If clay content is sufficient so that clay dominates soil properties, clay becomes the principal noun with the other major soil constituent as modifier, i.e. sandy clay. Other minor soil constituents may be included in accordance with the classification breakdown for cohesionless soils, i.e. silty clay, trace sand, little gravel.

Consistency	Unconfined Compressive Strength (psf)	Approximate Range of (N)
Very Soft	Below 500	0 - 2
Soft	500 - 1,000	3 - 4
Medium	1,000 - 2,000	5 - 8
Stiff	2,000 - 4,000	9 - 15
Very Stiff	4,000 - 8,000	16 - 30
Hard	8,000 - 16,000	31 - 50
Very Hard	Over 16,000	Over 50

Consistency of cohesive soils is based upon an evaluation of the observed resistance to deformation under load and not upon the Standard Penetration Resistance (N).

COHESIONLESS SOILS

Density Classification	Relative Density %	Approximate Range of (N)
Very Loose	0 - 15	0 - 4
Loose	16 - 35	5 - 10
Medium Compact	36 - 65	11 - 30
Compact	66 - 85	31 - 50
Very Compact	86 - 100	Over 50

Relative Density of cohesionless soils is based upon the evaluation of the Standard Penetration Resistance (N), modified as required for depth effects, sampling effects, etc.

SAMPLE DESIGNATIONS

AS - Auger Sample – Cuttings directly from auger flight
BS - Bottle or Bag Samples
S - Split Spoon Sample - ASTM D 1586
LS - Liner Sample with liner insert 3 inches in length
ST - Shelby Tube sample - 3 inch diameter unless otherwise noted
PS - Piston Sample - 3 inch diameter unless otherwise noted
RC - Rock Core - NX core unless otherwise noted

STANDARD PENETRATION TEST (ASTM D 1586) - A 2.0 inch outside-diameter, 1-3/8 inch inside-diameter split barrel sampler is driven into undisturbed soil by means of a 140-pound weight falling freely through a vertical distance of 30 inches. The sampler is normally driven three successive 6-inch increments. The total number of blows required for the final 12 inches of penetration is the Standard Penetration Resistance (N).

Figure No. 6



19



20




734-406-1531

E.T. MacKenzie Company
One of The MacKenzie Companies

Contracting & Consulting

October 31, 2019

Scio Township
827 N. Zeeb Road
Ann Arbor, MI 48103-1599

HAND DELIVERED

RE: Detailed Engineering submittal for Site Plan #19007
Proposed E. T. MacKenzie Co. Office at 8197 Jackson Road, Ann Arbor, MI

To Whom It May Concern:

The E. T. MacKenzie Company respectfully requests the review and approval of the Detailed Engineering plans for our proposed new office building at the above address. Please find enclosed the Township's DE application. Also attached is our check number 136513 in the amount of $2,496.00 for the Township's DE Application Fees along with nine 24" x 36" copies + one 11" x 17" copy of the proposed site plan, and 2 separate flash drives containing copies of all submittal items.

Additionally, OHM asked for the submittal of the Stormwater Infiltration Report prepared by G2 Consulting Group which indicates the site soils will not provide any stormwater infiltration values acceptable to the standards of the Washtenaw County Water Resources Commissioner. The Report is attached to the Engineers' copy of the Detailed Engineering Plans along with the Standard Scio Township Engineering Detail drawings but not the other eight requested copies. OHM also asked for a revised Engineer's Estimate of the project costs which is also attached to the referenced Engineer's copy of the Detailed Engineering Plans. These three items are also included on the flash drives.

If you have any questions regarding our request, please contact me at your earliest convenience. My direct dial number is (517) 622-2117. We would very much like to start on the construction of this very small project by late fall of 2019. Thank you for your assistance in our endeavors to plan for the future of our company in your community.

Sincerely,
E. T. MacKenzie Company

Ronald W. Clark

Ronald W. Clark

Attachments:
Detailed Engineering Application/Fee Quote
Detailed Engineering Site Plans dated 10-24-19
Revised Engineer's Estimate of Project Costs
Stormwater Infiltration Report prepared by G2 Consulting Group
Two Flash Drives with copies of all submitted materials

E.T. MacKenzie Company - Ann Arbor

One of The MacKenzie Companies

6400 Jackson Road
Ann Arbor, MI 48103
Phone: (734) 761.5050 Fax: (734) 761.5323
www.mackenzieco.com

Equal Opportunity Employer

To:	E.T. MacKenzie Company	**Contact:**	
Address:	4248 West Saginaw Hwy	**Phone:**	(517) 627-8408
	Grand Ledge, MI 48837	**Fax:**	(517) 627-4470
Project Name:	8197 Jackson Road Site Development	**Bid Number:**	2019999
Project Location:	8197 Jackson Road, Scio Township, MI	**Bid Date:**	10/30/2019
Addendum #:	NA		

Line #	Item Description	Estimated Quantity	Unit	Unit Price	Total Price
010	Silt Fence	450.00	LF	$1.00	$450.00
020	Riprap, Flared End Section Protection	25.00	SY	$35.00	$875.00
030	Riprap, Forebay Filter	20.00	CY	$35.00	$700.00
040	Tree Removal	1.00	EACH	$150.00	$150.00
050	Mass Grading	1.00	LS	$15,000.00	$15,000.00
060	Fine Grading	1.00	LS	$2,500.00	$2,500.00
070	4" SCH40 PVC Sanitary Lead W/ Cleanout	150.00	LF	$22.00	$3,300.00
080	15" C76 CLIV RCP Storm Sewer	65.00	LF	$35.00	$2,275.00
090	12" C76 CLIV RCP Storm Sewer	26.00	LF	$30.00	$780.00
100	8" SCH40 PVC Storm Sewer	20.00	LF	$20.00	$400.00
110	48" CMP Outlet Control Structure	1.00	EACH	$3,500.00	$3,500.00
120	15" RCP Flared End Section	2.00	EACH	$750.00	$1,500.00
130	12" RCP Flared End Section	1.00	EACH	$500.00	$500.00
140	1" Type K Copper Water Service	163.00	LF	$25.00	$4,075.00
150	1" Corporation And Tap	1.00	EACH	$150.00	$150.00
160	1" Curb Stop And Box	1.00	EACH	$350.00	$350.00
170	Aggregate Base, MDOT 22A, 8.0"	840.00	SY	$8.50	$7,140.00
180	Aggregate Base, MDOT CLII Sand, 4.0"	245.00	SY	$4.00	$980.00
190	Concrete Curb, Integral	80.00	LF	$10.00	$800.00
200	Concrete Sidewalk, 4.0"	2,200.00	SF	$2.50	$5,500.00
210	Concrete Slab, Dumpster Enclosure	1.00	EACH	$500.00	$500.00
220	Bike Hoop, Surface Mount	2.00	EACH	$450.00	$900.00
230	HMA, MDOT 13A, 3.5"	165.00	TON	$85.00	$14,025.00
240	Pavement Markings	1.00	LS	$250.00	$250.00
250	Wheel Stops	8.00	EACH	$50.00	$400.00
260	Site Signage	1.00	LS	$75.00	$75.00



Total Bid Price: $67,075.00

ACCEPTED:

The above prices, specifications and conditions are satisfactory and are hereby accepted.

Buyer: _____

Signature: _____

Date of Acceptance: _____

CONFIRMED:

E.T. MacKenzie Company - Ann Arbor Division

Authorized Signature: _____

Estimator: John Niemiec
(734) 761.5050 jniemiec@mackenzieco.com

CONSULTING
GROUP

June 28, 2019

Mr. John Niemiec
E.T. MacKenzie Company
6400 Jackson Road
Ann Arbor, Michigan 48103

RE: Letter of Infiltration Evaluation
Proposed Scio Township Infiltration Testing
8197 Jackson Road
Scio Township, Washtenaw County, Michigan
G2 Project No. 193146

Dear Mr. Niemiec,

In accordance with your request, we have completed the infiltration evaluation for the proposed development to be constructed at the aforementioned address. The proposed project includes the construction of a single-story office as well as associated pavements and utilities. To accommodate the increase in collected stormwater as a result of the new impervious areas, a stormwater management area will be used to reintroduce the collected stormwater into the natural water cycle by means of subsurface infiltration.

We conducted our infiltration evaluation in general accordance with the Washtenaw County Water Resource Commissioner (WCWRC) revised "Rules and Guidelines - Procedures & Design Criteria for Stormwater Management Systems" dated October 17, 2016. The purpose of our infiltration investigation is to determine the infiltration rates within the area of the proposed stormwater management structures for use in design.

FIELD OPERATIONS

E.T. MacKenzie Company selected the number, depth, and location of the test pits. The locations of the test pits were verified in the field by a G2 engineer. The approximate locations of the test pits are shown in Test Pit Location Plan, Plate, No. 1. The ground surface elevation at the test pit locations was approximated based on the topographic site plan provided by John Niemiec in an email dated June 25, 2019. The longitude and latitudes indicated in the Test Pit Logs, Figures 1 through 7, were approximated using Google Earth.

The test pits were excavated by E.T. MacKenzie Company using a backhoe with a 42-inch bucket. Within each test pit, Ryan Carpus of G2 Consulting Group, LLC maintained logs of the encountered subsurface conditions including changes in stratigraphy and observed groundwater levels. The test pit logs are based on the results of the field and laboratory soil classification and testing.

FIELD AND LABORATORY TESTING

Due to the presence of cohesive soils and shallow water table levels at the anticipated base elevation of the proposed detention basin, no infiltration testing was performed during our field investigation. Representative soil samples were subjected to laboratory testing to determine soil parameters pertinent to on-site infiltration. Soil samples obtained in the field were stored in sealed bags and transported to

our Ann Arbor office for laboratory testing and classification. An experienced geotechnical engineer classified the soils in general conformance with the Unified Soil Classification System. Laboratory testing included natural moisture content and unconfined compressive strength determinations. The unconfined compressive strengths were determined by using a spring-loaded hand penetrometer. The hand penetrometer estimates the unconfined compressive strength to a maximum of 4-1/2 tons per square foot (tsf) by measuring the resistance of the soil sample to the penetration of a calibrated spring-loaded cylinder.

The results of the field and laboratory testing are indicated on the test pit logs at the depths samples were taken. The test pit logs are presented on Figure Nos. 1 through 5. We will hold the soil samples for a period of 60 days following the issuance of this report. If you would like the samples retained beyond this period, or if you would like the samples returned to you, please let us know.

SITE CONDITIONS

The site is a commercially developed property, mostly consisting of gravel roads and a garage, with a few other small structures. The property lies within the Honey Creek Basin and is part of the Huron watershed. Site grades are generally flat with slight variances, except for a drainage ditch on the west side of the property roughly 2 to 3 feet deep. Beyond the development limits, the surrounding properties are commercial to the north-east, agricultural to the south, west, and north, and undeveloped to the east.

SOIL AND GROUNDWATER CONDITIONS

Approximately 4 to 8 inches of sandy clay topsoil are present at the ground surface of test pits TP-1 through TP-5. Granular soils consisting of gravelly sand and clayey sand underlie the topsoil in test pits TP-2 through TP-5 to depths between 1-1/2 and 2-1/2 feet. Cohesive soils consisting of sandy clay and silty clay underlie the topsoil in TP-1 and the granular material in TP-2 through TP-5 to depths between 4 and 6 feet. The native cohesive soils are medium to hard in consistency with natural moisture contents ranging from 11 to 18 percent and unconfined compressive strengths ranging from 1000 to 9000 pounds per square foot (psf). Granular soils consisting of clayey sand, silty sand, and sandy silt are present below the clay soils within test pits TP-1 through TP-4 and extend to the explored depths between 5 and 7-1/2 feet.

Groundwater was observed during excavation operations within test pits TP-1 through TP-4 between 4 and 7 feet below the ground surface. Fluctuations in long-term groundwater levels should be anticipated due to seasonal variations and following periods of prolonged precipitation.

INFILTRATION CONSIDERATIONS

The following table provides the results of our observations during test pit operations:

Test Pit No.	Soil Type (USCS)	Excavation Depth (ft)	Groundwater Depth (ft)	Infiltration Rate (iph)
TP-1	CLS	5	4	‡---
TP-2	CL-ML	5.5	5	‡---
TP-3	CLS	5	4	‡---
TP-4	CLS	7.5	7	‡---
TP-5	CLS	6	---	‡---

Notes: ‡Due to the presence of cohesive soils near the test elevation, no infiltration testing was conducted.

The soils present at the anticipated base elevation of the proposed detention basin are not conducive to infiltration; therefore, we recommend an alternative approach to on-site stormwater management be evaluated or that the stormwater management structures be sized properly to accommodate the stormwater flow associated with the design rainfall event.

GENERAL COMMENTS

If changes occur in the design, location, or concept of the project, conclusions and recommendations contained in this report are not valid unless G2 Consulting Group, LLC reviews the changes. G2 Consulting Group, LLC will then confirm any assumptions regarding the project scope presented herein or make changes in writing. The scope of the present investigation was limited to evaluation of subsurface conditions at the proposed test pit locations. No chemical or environmental testing or analyses were included in the scope of this investigation.

We base the analyses and recommendations submitted in this report upon the data from the test pits performed at the approximate locations shown on the Test Pit Location Plan, Plate No. 1. This report does not reflect variations that may occur between the actual test pit location and the actual infiltration basin location. The nature and extent of any such variations may not become clear until the time of construction. We recommend G2 Consulting Group, LLC observe all geotechnical related work, including subgrade preparation and engineered fill placement.

We appreciate the opportunity to be of service to you on this project and look forward to discussing the results presented. In the meantime, if you have any questions regarding this report or any other matter pertaining to the project, please call us.

Sincerely,

G2 Consulting Group, LLC

Ryan Carpus
Staff Engineer

Jason B. Stoops, P.E.
Office Manager / Project Manager

Encl:
- Test Pit Location Plan — Plate No. 1
- Test Pit Logs — Figure Nos. 1-5
- General Notes Terminology — Figure No. 6



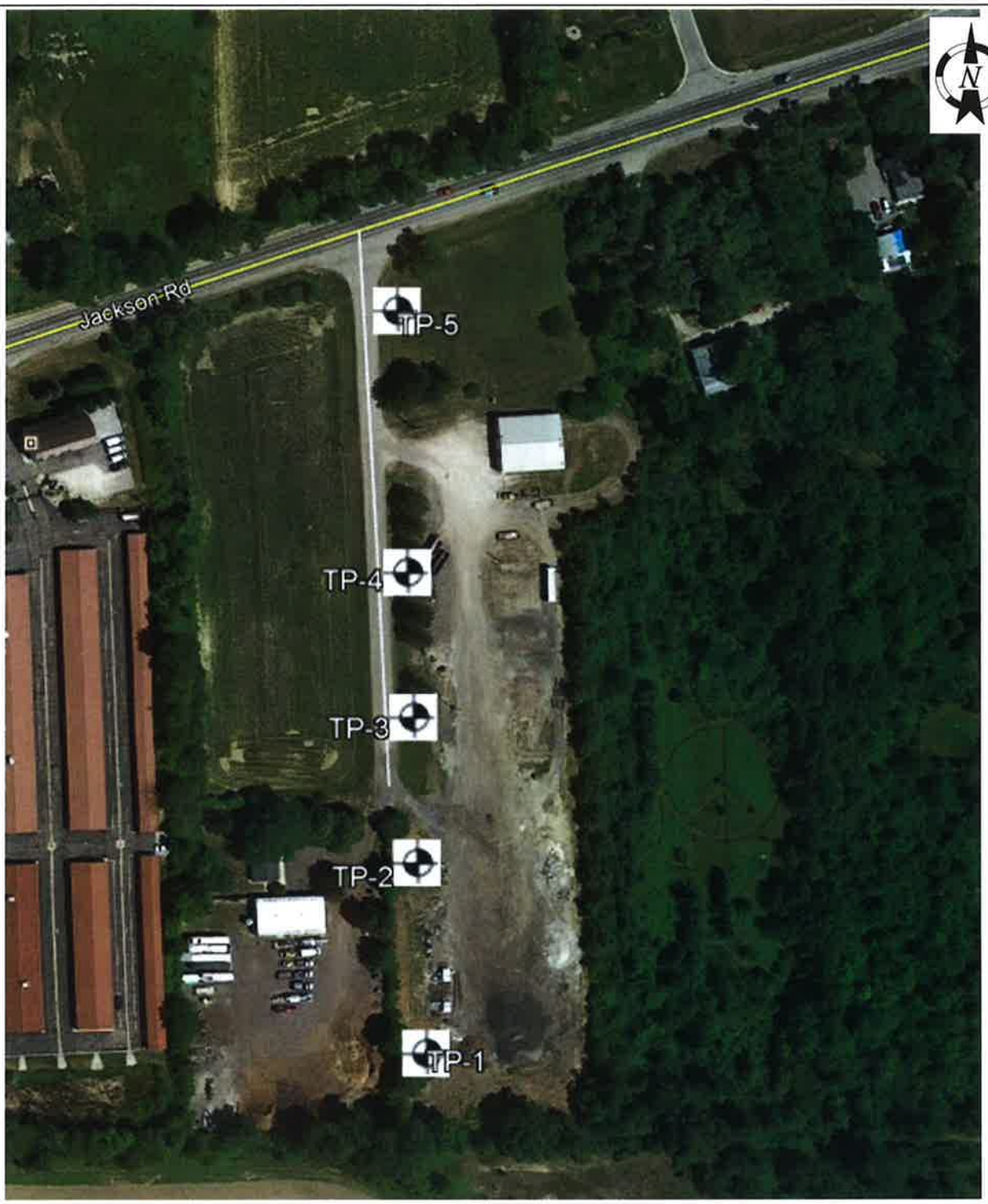

Legend

Test Pits Performed by E.T. Mackenzie Company on June 27, 2019

Test Pit Location Plan

Scio Twp Infiltration Testing
8197 Jackson Road
Scio Township, Michigan 48103

CONSULTING GROUP

Project No. 193146	
Drawn by: RPC	
Date:6-27-2019	Plate No. 1
Scale: NTS	

Project Name: Proposed Scio Twp Infiltration Testing

Project Location: 8197 Jackson Road
Scio Twp, Washtenaw County, Michigan

G2 Project No. 193146

Latitude: 42.290363° Longitude: -83.891121°

Test Pit No. TP-1

G2 CONSULTING GROUP

SUBSURFACE PROFILE				SOIL SAMPLE DATA				
ELEV. (ft)	PRO-FILE	GROUND SURFACE ELEVATION: 890.0 ft ±	DEPTH (ft)	SAMPLE TYPE/NO.	DRY DENSITY (PCF)	MOISTURE CONTENT (%)	PERCENT COMPACTION	UNCOF. COMP. ST. (PSF)
		Topsoil: Brown Sandy Clay (8 inches)						
		0.7						
		Medium Brown Sandy Clay with trace gravel		S-1		17.1		1500*
		4.0 ▼						
		Wet Brown Clayey Sand		S-2				
885.0		5.0	5					
		End of Test Pit @ 5 ft						
880.0			10					

Total Depth: 5 ft
Excavation Date: June 27, 2019
Inspector: R. Carpus
Contractor: E.T. Mackenzie Company
Operator: Ron

Excavation Equipment:
Excavator equipped with 42-inch bucket

Water Level Observation:
Groundwater encountered at 4 feet during and upon completion of excavation operations

Notes:
* Calibrated Hand Penetrometer

Excavation Backfilling Procedure:
Test pit backfilled with excavated soil

Figure No. 1

TEST PIT 193146.GPJ 20150116 G2 CONSULTING DATA TEMPLATE.GDT 6/28/19

Project Name: Proposed Scio Twp Infiltration Testing

Project Location: 8197 Jackson Road
Scio Twp, Washtenaw County, Michigan

G2 Project No. 193146

Latitude: 42.290899° Longitude: -83.891191°

Test Pit No. TP-2

G2 CONSULTING GROUP

SUBSURFACE PROFILE				SOIL SAMPLE DATA				
ELEV. (ft)	PRO-FILE	GROUND SURFACE ELEVATION: 894.0 ft ±	DEPTH (ft)	SAMPLE TYPE/NO.	DRY DENSITY (PCF)	MOISTURE CONTENT (%)	PERCENT COMPACTION	UNCOF. COMP. ST. (PSF)
		Topsoil: Brown Sandy Clay (8 inches) 0.7						
		Brown Gravelly Sand with trace silt 1.5		S-1				
		Hard Brown Silty Clay 3.0		S-2		12.5		8000*
		Stiff Brown Silty Clay		S-3				2000*
889.0		5.0	5					
		Wet Brown Silty Sand 5.5		S-4				
		End of Test Pit @ 5.5 ft						
884.0			10					

Total Depth: 5.5 ft
Excavation Date: June 27, 2019
Inspector: R. Carpus
Contractor: E.T. Mackenzie Company
Operator: Ron

Excavation Equipment:
Excavator equipped with 42-inch bucket

Water Level Observation:
Groundwater encountered at 4 feet during and upon completion of excavation operations

Notes:
* Calibrated Hand Penetrometer

Excavation Backfilling Procedure:
Test pit backfilled with excavated soil

Figure No. 2

TEST PIT 193146.GPJ 20150116 G2 CONSULTING DATA TEMPLATE.GDT 6/28/19

Project Name: Proposed Scio Twp Infiltration Testing

Project Location: 8197 Jackson Road
Scio Twp, Washtenaw County, Michigan

G2 Project No. 193146

Latitude: 42.291391° Longitude: -83.891166°

Test Pit No. TP-3

G2 CONSULTING GROUP

SUBSURFACE PROFILE				SOIL SAMPLE DATA				
ELEV. (ft)	PRO-FILE	GROUND SURFACE ELEVATION: 897.0 ft ±	DEPTH (ft)	SAMPLE TYPE/NO.	DRY DENSITY (PCF)	MOISTURE CONTENT (%)	PERCENT COMPACTION	UNCOF. COMP. ST. (PSF)
		Topsoil: Brown Sandy Clay (6 inches) 0.5						
		Brown Clayey Sand		S-1				
		2.5						
		Medium Brown Sandy Clay		S-2		17.8		1000*
		4.0 ▼						
		Wet Brown Sand with trace silt		S-3				
892.0		5.0	5					
		End of Test Pit @ 5 ft						
887.0			10					

Total Depth: 5 ft
Excavation Date: June 27, 2019
Inspector: R. Carpus
Contractor: E.T. Mackenzie Company
Operator: Ron

Excavation Equipment:
Excavator equipped with 42-inch bucket

Water Level Observation:
Groundwater encountered at 4 feet during and upon completion of excavation operations

Notes:
* Calibrated Hand Penetrometer

Excavation Backfilling Procedure:
Test pit backfilled with excavated soil

Figure No. 3

TEST PIT 193146.GPJ 20150116 G2 CONSULTING DATA TEMPLATE.GDT 6/28/19

Project Name: Proposed Scio Twp Infiltration Testing

Project Location: 8197 Jackson Road
Scio Twp, Washtenaw County, Michigan

G2 Project No. 193146

Latitude: 42.291939° Longitude: -83.891193°

Test Pit No. TP-4

G2 CONSULTING GROUP

SUBSURFACE PROFILE				SOIL SAMPLE DATA				
ELEV. (ft)	PRO-FILE	GROUND SURFACE ELEVATION: 901.0 ft ±	DEPTH (ft)	SAMPLE TYPE/NO.	DRY DENSITY (PCF)	MOISTURE CONTENT (%)	PERCENT COMPACTION	UNCOF. COMP. ST. (PSF)
		Topsoil: Brown Sandy Clay (6 inches) 0.5						
		Brown Gravelly Sand with trace silt 2.5		S-1				
		Hard Brown Sandy Clay 3.5		S-2		11.2		9000*
		Medium Brown Sandy Clay 4.5		S-3				1000*
896.0			5	S-4				
		Brown Sandy Silt 7.5						
891.0		End of Test Pit @ 7.5 ft	10					

Total Depth: 7.5 ft
Excavation Date: June 27, 2019
Inspector: R. Carpus
Contractor: E.T. Mackenzie Company
Operator: Ron

Excavation Equipment:
Excavator equipped with 42-inch bucket

Water Level Observation:
Groundwater encountered at 7 feet during and upon completion of excavation operations

Notes:
* Calibrated Hand Penetrometer

Excavation Backfilling Procedure:
Test pit backfilled with excavated soil

Figure No. 4

TEST PIT 193146.GPJ 20150116 G2 CONSULTING DATA TEMPLATE.GDT 6/28/19

Project Name: Proposed Scio Twp Infiltration Testing

Project Location: 8197 Jackson Road
Scio Twp, Washtenaw County, Michigan

G2 Project No. 193146

Latitude: 42.292625° Longitude: -83.891220°

Test Pit No. TP-5

G2 CONSULTING GROUP

SUBSURFACE PROFILE				SOIL SAMPLE DATA				
ELEV. (ft)	PRO-FILE	GROUND SURFACE ELEVATION: 906.0 ft ±	DEPTH (ft)	SAMPLE TYPE/NO.	DRY DENSITY (PCF)	MOISTURE CONTENT (%)	PERCENT COMPACTION	UNCOF. COMP. ST. (PSF)
		Topsoil: Brown Sandy Clay (4 inches) 0.3						
		Dark Brown Silty Sand 1.5		S-1				
		Very Stiff Brown Sandy Clay		S-2		14.0		5000*
901.0			5					
		6.0 End of Test Pit @ 6 ft						
896.0			10					

Total Depth: 6 ft
Excavation Date: June 27, 2019
Inspector: R. Carpus
Contractor: E.T. Mackenzie Company
Operator: Ron

Excavation Equipment:
Excavator equipped with 42-inch bucket

Water Level Observation:
Dry during and upon completion of excavation operations

Notes:
* Calibrated Hand Penetrometer

Excavation Backfilling Procedure:
Test pit backfilled with excavated soil

Figure No. 5

TEST PIT 193146.GPJ 20150116 G2 CONSULTING DATA TEMPLATE.GDT 6/28/19

CONSULTING GROUP

GENERAL NOTES TERMINOLOGY

Unless otherwise noted, all terms herein refer to the Standard Definitions presented in ASTM 653.

PARTICLE SIZE

Boulders		- greater than 12 inches
Cobbles		- 3 inches to 12 inches
Gravel	- Coarse	- 3/4 inches to 3 inches
	- Fine	- No. 4 to 3/4 inches
Sand	- Coarse	- No. 10 to No. 4
	- Medium	- No. 40 to No. 10
	- Fine	- No. 200 to No. 40
Silt		- 0.005mm to 0.074mm
Clay		- Less than 0.005mm

CLASSIFICATION

The major soil constituent is the principal noun, i.e. clay, silt, sand, gravel. The second major soil constituent and other minor constituents are reported as follows:

Second Major Constituent (percent by weight)	Minor Constituent (percent by weight)
Trace - 1 to 12%	Trace - 1 to 12%
Adjective - 12 to 35%	Little - 12 to 23%
And - over 35%	Some - 23 to 33%

COHESIVE SOILS

If clay content is sufficient so that clay dominates soil properties, clay becomes the principal noun with the other major soil constituent as modifier, i.e. sandy clay. Other minor soil constituents may be included in accordance with the classification breakdown for cohesionless soils, i.e. silty clay, trace sand, little gravel.

Consistency	Unconfined Compressive Strength (psf)	Approximate Range of (N)
Very Soft	Below 500	0 - 2
Soft	500 - 1,000	3 - 4
Medium	1,000 - 2,000	5 - 8
Stiff	2,000 - 4,000	9 - 15
Very Stiff	4,000 - 8,000	16 - 30
Hard	8,000 - 16,000	31 - 50
Very Hard	Over 16,000	Over 50

Consistency of cohesive soils is based upon an evaluation of the observed resistance to deformation under load and not upon the Standard Penetration Resistance (N).

COHESIONLESS SOILS

Density Classification	Relative Density %	Approximate Range of (N)
Very Loose	0 - 15	0 - 4
Loose	16 - 35	5 - 10
Medium Compact	36 - 65	11 - 30
Compact	66 - 85	31 - 50
Very Compact	86 - 100	Over 50

Relative Density of cohesionless soils is based upon the evaluation of the Standard Penetration Resistance (N), modified as required for depth effects, sampling effects, etc.

SAMPLE DESIGNATIONS

AS - Auger Sample – Cuttings directly from auger flight
BS - Bottle or Bag Samples
S - Split Spoon Sample - ASTM D 1586
LS - Liner Sample with liner insert 3 inches in length
ST - Shelby Tube sample - 3 inch diameter unless otherwise noted
PS - Piston Sample - 3 inch diameter unless otherwise noted
RC - Rock Core - NX core unless otherwise noted

STANDARD PENETRATION TEST (ASTM D 1586) - A 2.0 inch outside-diameter, 1-3/8 inch inside-diameter split barrel sampler is driven into undisturbed soil by means of a 140-pound weight falling freely through a vertical distance of 30 inches. The sampler is normally driven three successive 6-inch increments. The total number of blows required for the final 12 inches of penetration is the Standard Penetration Resistance (N).

Figure No. 6

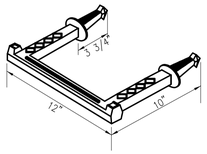

MANHOLE STEP
M.A. PSI-375

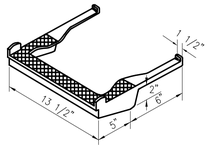

STANDARD MANHOLE STEP
E.J.I.W. 8502

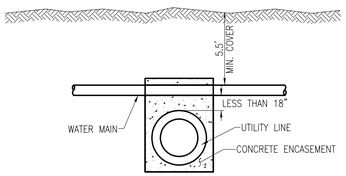

UTILITY CROSSING WITH LESS THAN 18" CLEARANCE

NOTE:
WHERE CONCRETE ENCASEMENT IS SPECIFIED FOR NEW UTILITY A 6" MINIMUM LAYER OF MECHANICALLY COMPACTED SAND SHALL BE MAINTAINED BETWEEN EX. UTILITY & TOP OF CONCRETE ENCASEMENT

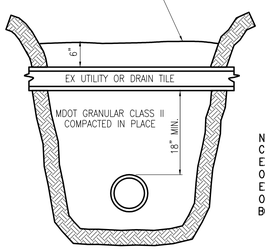

NOTE:
COMPACTED SAND SHALL EXTEND FOR 9" EACH SIDE OF EXISTING PIPE, AT 6" ABOVE EXISTING PIPE & SHALL SLOPE OUT AT A 1:1 (45°) SLOPE TO THE BOTTOM OF THE TRENCH

STANDARD PIPE SUPPORT

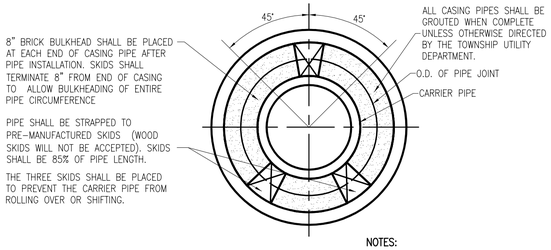

DIA. OF CARRIER PIPE "A"	MIN. (I.D.) "A"	ROAD CROSSING MIN."B"	RAILROAD CROSSING MIN."B"
6"	16"	.312	.312
8"	16"	.312	.375
12"	20"	.312	.438
16"	24"	.375	.500
20"	30"	.375	.500
24"	36"	.375	.500

A=INSIDE DIAMETER
B=WALL THICKNESS

4" MINIMUM CLEARANCE BETWEEN MAX. O.D. AT A JOINT OF THE PIPE AND THE I.D. OF THE CASING PIPE FOR THE TOP 90° OF THE CASING

NOTES:
DETAILS ARE TYPICAL FOR WATER PIPE CONSTRUCTED IN CASING PIPE

THE CONTRACTOR SHALL SUBMIT IN WRITING THE DETAILS OF THE APPROPRIATE PIPE CASING INSTALLATION FOR THE REVIEW AND APPROVAL BY THE ENGINEER BEFORE INSTALLATION OF ANY CASING STARTS

CASING SHALL BE SPIRAL WELDED STEEL PIPE A.S.T.M. A-252, GR. 2.

ALL CASING PIPE JOINTS SHALL BE FULLY WELDED

PIPE BARREL SUPPORT FOR WATER MAIN CONSTRUCTED IN CASING PIPE

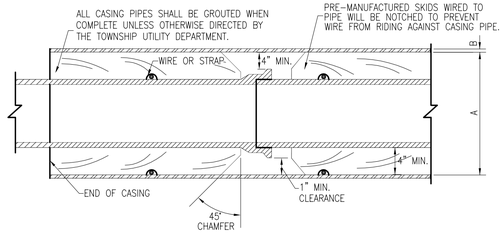

STANDARD CASING SECTION

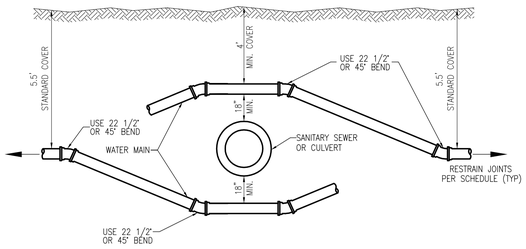

SEWER OR CULVERT CROSSING

NOTE:
BENDS CAN BE ELIMINATED FOR MINOR VERTICAL DEFLECTIONS IN DUCTILE IRON PIPE (1' OR LESS). IN THIS CASE, THE PIPE MAY BE DEFLECTED UP TO 4' PER JOINT.

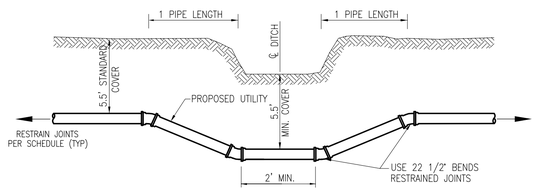

DITCH OR STREAM CROSSING

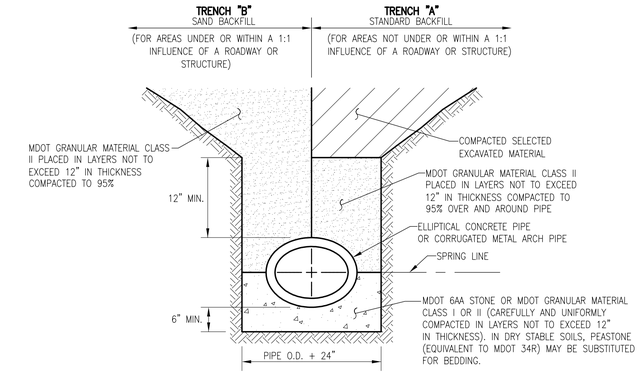

ELLIPTICAL CONCRETE PIPE OR CORRUGATED METAL ARCH PIPE

NOTES:
THE MAXIMUM PARTICLE SIZE ALLOWED IN THE EMBEDMENT ZONE IS 1.5 INCHES.

THERE SHALL BE NO DEBRIS, FROZEN MATERIAL, OR ORGANIC MATERIAL WITHIN 2 FEET OF THE TOP OF THE PIPE.

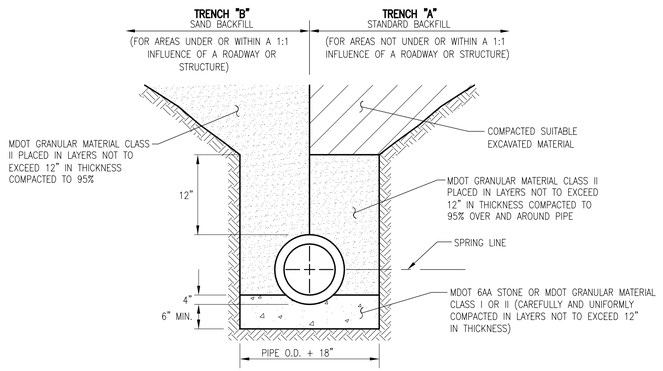

24" DIAMETER AND SMALLER PIPE
(CONCRETE AND METAL PIPE)

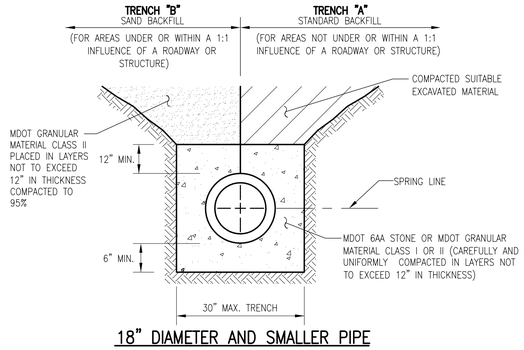

18" DIAMETER AND SMALLER PIPE
(PVC PIPE)

NOTES:
THE MAXIMUM PARTICLE SIZE ALLOWED IN THE EMBEDMENT ZONE IS 1.5 INCHES.

THERE SHALL BE NO DEBRIS, FROZEN MATERIAL, OR ORGANIC MATERIAL WITHIN 2 FEET OF THE TOP OF THE PIPE.

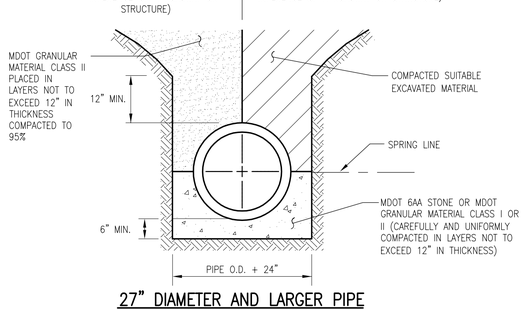

27" DIAMETER AND LARGER PIPE
(CONCRETE AND METAL PIPE)

OHM

VERT DATUM ####
HORZ DATUM ####
SCALE H: 1"=40' V: 1"=4'
JOB # ####
CITY/VILLAGE/TOWNSHIP #####
COUNTY #####
TOWN ####
RANGE ####
SECTION ####
PROJ MGR ####
ENGINEER ####
CADD ####
BID DATE ####
DATE

DATE:
REVISIONS:
DATE:
REVISIONS:
DATE:
REVISIONS:
CLIENT: ####

34000 Plymouth Road | Livonia, MI 48150 | P (734) 522-6711 | F (734) 522-6427 | WWW.OHM-ADVISORS.COM

COPYRIGHT 2007 OHM
ALL DRAWINGS AND WRITTEN MATERIALS APPEARING HEREIN CONSTITUTE THE ORIGINAL AND UNPUBLISHED WORK OF OHM AND THE SAME MAY NOT BE DUPLICATED, DISTRIBUTED, OR DISCLOSED WITHOUT PRIOR WRITTEN CONSENT OF OHM

SCIO TOWNSHIP
GENERAL DETAILS

SHEET
#####
OF ####

DRAWING PATH: S:\CVTS\ScioTwp\Standards\CADD\STD_GEN\GENERAL DETAILS.DWG May 29, 2007 - 3:03pm

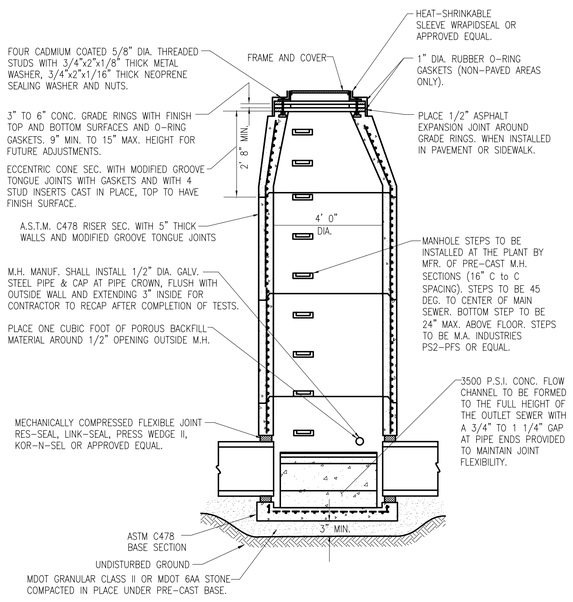

STANDARD MANHOLE
8" DIAMETER THROUGH 21" DIAMETER PIPE

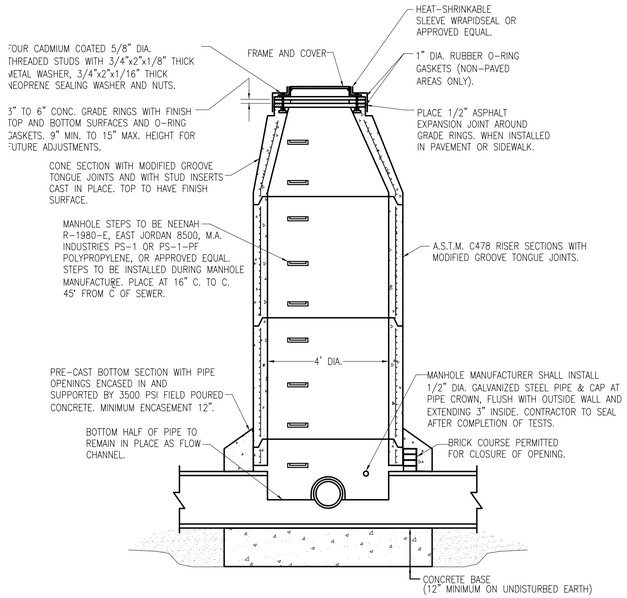

NOTE:
FOR LOCAL SANITARY SEWER EXTENSIONS CONNECTING DIRECTLY OR INDIRECTLY TO SCIO TOWNSHIP PUBLIC WORKS

MANHOLE CONSTRUCTED OVER EXISTING SEWER

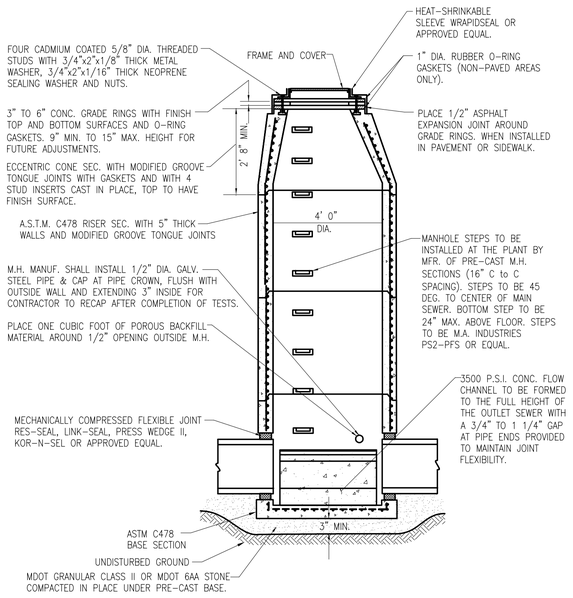

STANDARD MONITORING MANHOLE
6" DIAMETER PIPE OR SMALLER

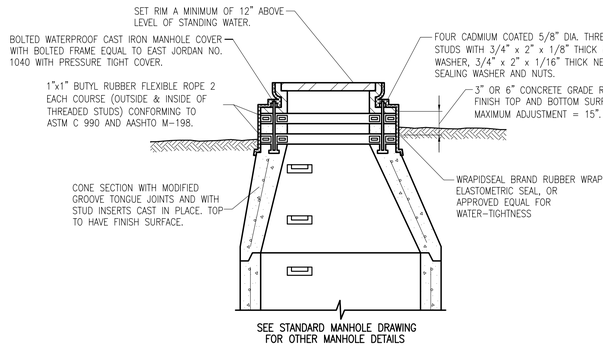

MANHOLE TOP WITHIN FLOOD PRONE AREA

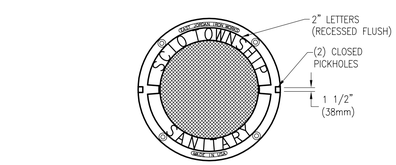

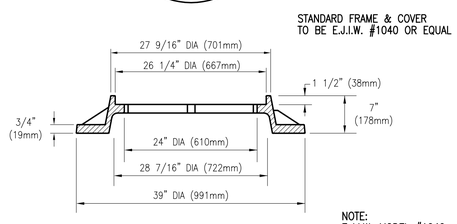

NOTE:
E.J.I.W. MODEL #1040

MANHOLE FRAME AND COVER

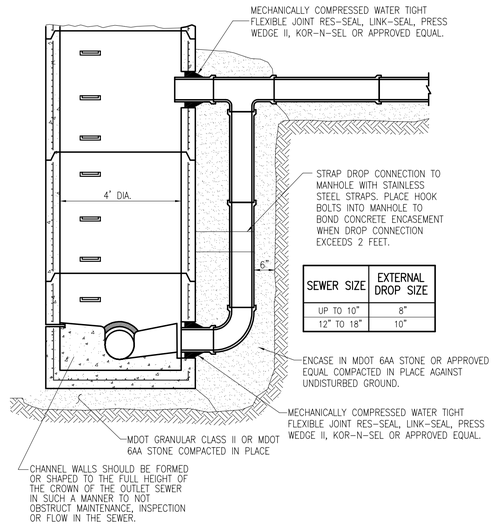

SEWER SIZE	EXTERNAL DROP SIZE
UP TO 10"	8"
12" TO 18"	10"

EXTERNAL DROP CONNECTION

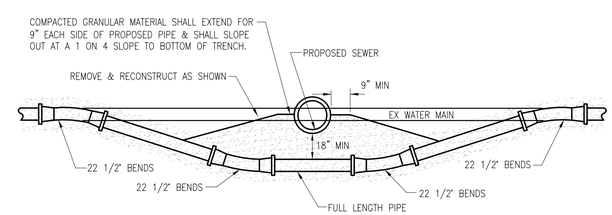

UTILITY RELOCATION

DRAWING PATH: S:\CVTSsdoTwp\Standards\CADD\STD_SAN\SAN DETAILS.DWG May 29, 2007 - 3:20pm

OHM

COUNTY	####
CITY/VILLAGE/TOWNSHIP	####
SCALE	H: 1"=40' V: 1"=4'
JOB #	####
HORZ DATUM	####
VERT DATUM	####
DATE	
REVISIONS:	
DATE:	
REVISIONS:	
DATE:	
CLIENT:	####
SECTION	####
TOWN	####
RANGE	####
PROJ MGR.	####
ENGINEER	####
CADD	####
BID DATE	####
DATE	

34000 Plymouth Road | Livonia, MI 48150 | P (734) 522-6711 | F (734) 522-6427 | WWW.OHM-ADVISORS.COM

COPYRIGHT 2007 OHM ALL DRAWINGS AND WRITTEN MATERIALS APPEARING HEREIN CONSTITUTE THE ORIGINAL AND UNPUBLISHED WORK OF OHM AND THE SAME MAY NOT BE DUPLICATED, DISTRIBUTED, OR DISCLOSED WITHOUT PRIOR WRITTEN CONSENT OF OHM

SCIO TOWNSHIP
SANITARY DETAILS

SHEET
#####
OF #####

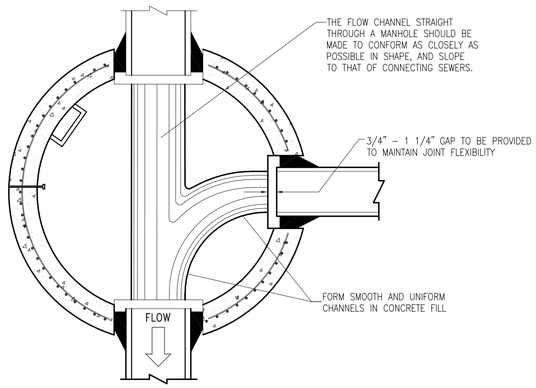

FLOW LINE

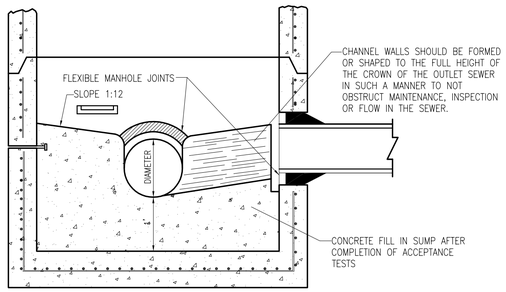

MANHOLE FLOW CHANNEL

NOTE:
PROVIDE EXPANSION JOINT
AROUND PERIMETER

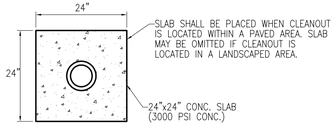

TOP VIEW

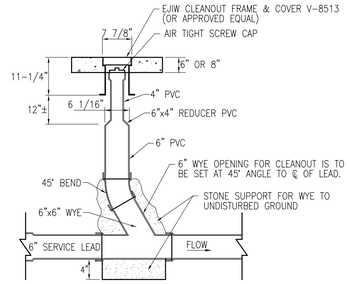

ELEVATION

SANITARY SEWER CLEANOUT

NOTE:
IN THE EVENT THAT OTHER UTILITIES ARE TO BE INSTALLED IN THE EASEMENT ADJACENT TO THE THE PROPERTY LINE, THE SEWER LEAD SHALL BE EXTENDED A SUFFICIENT DISTANCE BEYOND THE OTHER UTILITIES.

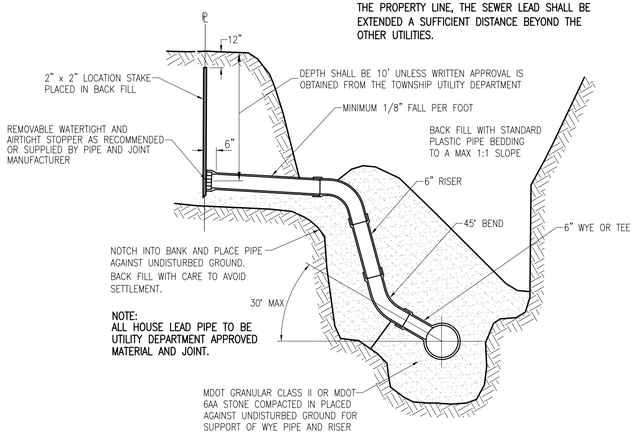

HOUSE SERVICE LEAD CONNECTION

NOTE:
CONTRACTOR SHALL EXCAVATE ON
BOTH SIDES OF SANITARY SEWER TO
EQUALIZE PRESSURE IF SO
DIRECTED BY THE ENGINEER.

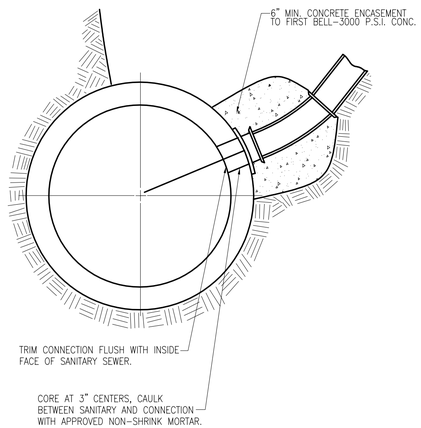

SADDLE CONNECTION

SCIO TOWNSHIP
STANDARD SANITARY SEWER CONSTRUCTION NOTES

1. ALL CONSTRUCTION PROCEDURES AND MATERIALS USED ON ALL SANITARY SEWER PROJECTS SHALL CONFORM TO THE CURRENT SCIO TOWNSHIP ENGINEERING STANDARDS AND DESIGN SPECIFICATIONS MANUAL.
2. ALL MANHOLE RIMS SHALL BE SET TO GRADE AS FURNISHED BY THE ENGINEER.
3. RISERS ON SANITARY SEWERS LEADS SHALL BE INSTALLED WHERE SEWER IS MORE THAN 10 FEET DEEP IN ORDER TO ACHIEVE A LEAD DEPTH OF 10 FEET.
4. PLACE ONE 6 INCH WYE FOR EACH LOT ON SANITARY SEWERS UNLESS OTHERWISE SPECIFIED.
5. ALL MANHOLES SHALL USE ECCENTRIC CONES PLACED TOWARD THE PROPERTY LINE UNLESS OTHERWISE SPECIFIED.
6. INFILTRATION FOR ANY SECTION OF SEWERS BETWEEN MANHOLES SHALL NOT EXCEED 100 GALLONS PER INCH IN DIAMETER PER MILE OF SEWER PER 24 HOURS.
7. NO FOOTING OR ROOF DRAINS SHALL BE CONNECTED TO THE PROPOSED SEWER.
8. NO CONNECTION RECEIVING STORM WATER, SURFACE WATER, OR GROUND WATER SHALL BE MADE TO SANITARY SEWERS.
9. ALL SEWERS SHALL BE SUBJECT TO INFILTRATION, EXFILTRATION, OR LOW-PRESSURE AIR TESTS, OR A COMBINATION THEREOF, PRIOR TO FINAL ACCEPTANCE BY THE TOWNSHIP. ALL SEWERS OVER 24 INCH DIAMETER SHALL BE SUBJECTED TO INFILTRATION TESTS. ALL SEWERS OF 24 INCH DIAMETER OR SMALLER, WHERE THE GROUND WATER LEVEL ABOVE THE TOP OF THE SEWER IS OVER 2 FEET, SHALL BE SUBJECTED TO INFILTRATION TESTS. ALL SEWERS OF 24 INCH DIAMETER OR LESS, WHERE THE GROUND WATER LEVEL ABOVE THE TOP OF THE SEWER IS 2 FEET OR LESS, SHALL BE SUBJECTED TO A LOW-PRESSURE AIR TEST, OR EXFILTRATION TEST WHERE APPROVED BY THE ENGINEER.
10. ALL PVC AND ABS PLASTIC SEWERS SHALL BE SUBJECTED TO DEFLECTION TESTING BY MEANS OF A NINE-POINT DEFLECTION TEST MANDREL, PULLED MANUALLY (BY HAND). THE MAXIMUM ALLOWED DEFLECTION SHALL BE 5%.
11. ALL SEWERS 36 INCH DIAMETER AND SMALLER SHALL BE VIDEOTAPED, WITH TEST RESULTS APPROVED BY THE TOWNSHIP UTILITY DEPARTMENT PRIOR TO PLACING THE SEWER IN SERVICE. WATER SHALL BE PLACED IN THE SEWER AT ALL UPSTREAM MANHOLES PRIOR TO VIDEOTAPING AS DIRECTED BY THE ENGINEER.
12. ALL SEWER SYSTEM CONSTRUCTION SHALL CONFORM TO THE CURRENT STANDARDS AND GENERAL SPECIFICATIONS OF SCIO TOWNSHIP AND ANY OTHER AGENCY HAVING JURISDICTION OVER THE CONSTRUCTION AREA.
13. ALL STUBS SHALL HAVE A WATER AND AIR TIGHT BULKHEAD.
14. NO SEWER SHALL BE CONSTRUCTED LESS THAN 8 INCH IN DIAMETER.
15. THE MINIMUM DEPTH TO TOP OF PIPE SHALL BE 5 FEET.
16. PIPE BEDDING MATERIAL SHALL BE COMPACTED TO 95% OF MAXIMUM DRY DENSITY.
17. THE MAXIMUM DEPTH TO INVERT OF ANY SANITARY SEWER SHALL NOT EXCEED THE DEPTH RECOMMENDED BY THE PIPE MANUFACTURER FOR EACH SIZE AND CLASS OF PIPE.

SANITARY SEWER MATERIALS

18. PLASTIC SANITARY SEWERS SHALL BE EITHER PVC SDR 26 (MINIMUM) (ASTM D-3034) OR PVC/ABS TRUSS PIPE AS MANUFACTURED BY CONTECH CONSTRUCTION PRODUCTS OR EQUAL (ASTM D-2680). ALL WYES, RISERS AND BUILDING SERVICE LEADS SHALL BE 6" PVC SDR 26 (ASTM D-3034). REINFORCED CONCRETE SEWER PIPE SHALL CONFORM TO ASTM C-76. DUCTILE IRON SANITARY SEWER SHALL MEET THE REQUIREMENTS OF ANSI/AWWA C151/A21.51 CLASS 52. WHERE THE SCIO TOWNSHIP SPECIFICATIONS DIFFER WITH ANSI/AWWA C151/A21.51, THE SPECIFICATIONS WILL PREVAIL.
19. FORCE MAIN PIPE SHALL BE DUCTILE IRON PIPE CONFORMING TO THE SCIO TOWNSHIP WATER MAIN STANDARDS OR PVC SDR 11 (MINIMUM) PRESSURE PIPE CONFORMING TO ASTM D-3034
20. JOINTS FOR PVC PIPE SHALL BE PUSH-ON TYPE (ASTM D-3212) OR SOLVENT-CEMENTED JOINTS (ASTM D-2680) IN SPECIAL APPLICATIONS AS SPECIFIED BY THE TOWNSHIP ENGINEER. JOINTS FOR ABS TRUSS PIPE SHALL CONSIST OF ABS COUPLINGS CHEMICALLY CEMENTED TO THE ENDS OF THE PIPE BEING CONNECTED. SOLVENTS AND METHODS SHALL CONFORM TO ASTM D-2680. MODIFIED GROOVED TONGUE (MGT) JOINTS FOR CONCRETE PIPE SHALL HAVE A RUBBER GASKET SNAPPED INTO A GROOVE CAST IN TO THE TONGUE. RUBBER GASKET JOINTS FOR CONCRETE PIPE SHALL BE IN ACCORDANCE WITH ASTM 443 SPECIFICATION. THE JOINTS SHALL BE LUBRICATED AND COUPLED IN ACCORDANCE WITH THE PIPE MANUFACTURER'S PRINTED INSTRUCTIONS.
21. FOR DUCTILE IRON PIPE, THE BELL OF EACH PIPE SHALL PROVIDE FOR THE SEATING OF A RUBBER GASKET SUITABLE FOR USE WITH SANITARY SEWAGE. SUFFICIENT NON-TOXIC LUBRICANT SHALL BE APPLIED AND SHALL HAVE NO DELETERIOUS EFFECT ON THE RUBBER GASKET.
22. MANHOLES SHALL BE PRE-CAST AND SHALL CONFORM TO ASTM C478, LATEST REVISION. FRAME AND CHIMNEY SECTIONS OF ALL SANITARY MANHOLES SHALL BE WRAPPED WITH WRAPIDSEAL HEAT-SHRINKABLE WRAP PRODUCED BY CANUSA-CPS OR APPROVED EQUAL.
23. FRAMES AND COVERS SHALL BE WATERPROOF, CAST IRON COVERS EQUAL TO EAST JORDAN IRON WORKS NO. 1040AGS HEAVY DUTY OR APPROVED EQUAL. BOLT DOWN COVERS (ONLY AS APPROVED BY TOWNSHIP UTILITIES DEPARTMENT) SHALL BE BOLTED DOWN WITH FOUR (4) CADMIUM COATED 5/8 INCH DIAMETER THREADED STUDS WITH 3/4" X 2" X 1/8" THICK, METAL WASHERS AND 3/4" X 2" X 1/16" THICK NEOPRENE SEALING WASHERS AND NUTS.

OHM

DATE | BID DATE | CADD | ENGINEER | PROJ MGR | SECTION | TOWN | RANGE | COUNTY | CITY/VILLAGE/TOWNSHIP | SCALE | HORZ DATUM | VERT DATUM
| #### | #### | #### | #### | #### | #### | #### | #### | #### | H: 1"=40' V: 1"=4' | #### |

CLIENT: #####
JOB # #####

REVISIONS: | DATE:
REVISIONS: | DATE:
REVISIONS: | DATE:

34000 Plymouth Road | Livonia, MI 48150 | P (734) 522-6711 | F (734) 522-6427 | WWW.OHM-ADVISORS.COM

COPYRIGHT 2007 OHM ALL DRAWINGS AND WRITTEN MATERIALS APPEARING HEREIN CONSTITUTE THE ORIGINAL AND UNPUBLISHED WORK OF OHM AND THE SAME MAY NOT BE DUPLICATED, DISTRIBUTED, OR DISCLOSED WITHOUT PRIOR WRITTEN CONSENT OF OHM

SCIO TOWNSHIP
SANITARY DETAILS

SHEET
#####
OF #####

DRAWING PATH: S:\CVT\ScioTwp\Standards\CADD\STD_SAN\SAN DETAILS.DWG May 29, 2007 - 3:19pm

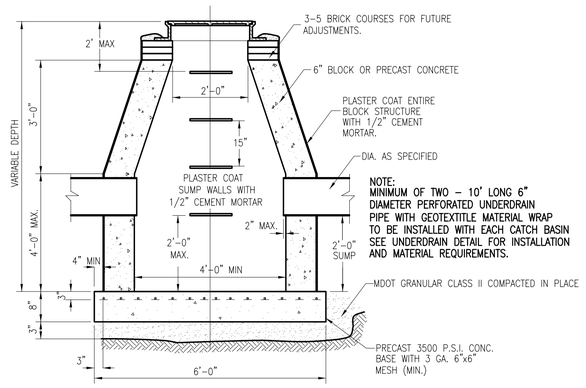

NOTE:
MINIMUM OF TWO - 10' LONG 6" DIAMETER PERFORATED UNDERDRAIN PIPE WITH GEOTEXTITLE MATERIAL WRAP TO BE INSTALLED WITH EACH CATCH BASIN SEE UNDERDRAIN DETAIL FOR INSTALLATION AND MATERIAL REQUIREMENTS.

SHALLOW CATCH BASIN

M.H. STEP SPACING:
CONC. BLK. M.H. ..... 18" CENTERS
PRECAST M.H. ..... 16" CENTERS
TOP STEP TO BE 21" BELOW TOP OF FRAME

MIN. CONE HEIGHTS:
BLOCK CONCENTRIC 3'-0"
PRECAST ECCENTRIC 2'-8" OR 3'-4"

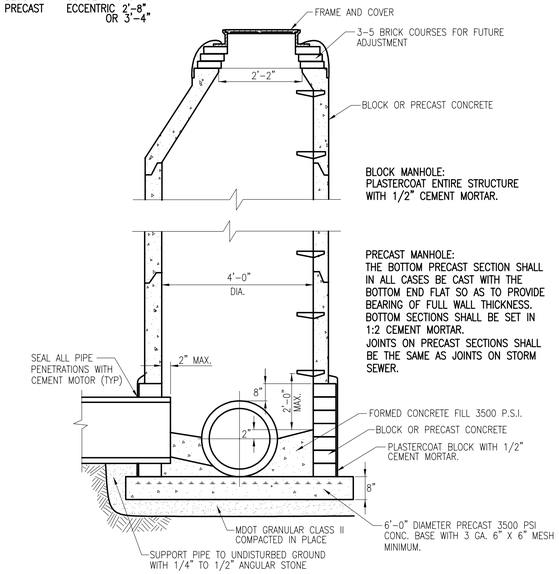

BLOCK MANHOLE:
PLASTERCOAT ENTIRE STRUCTURE WITH 1/2" CEMENT MORTAR.

PRECAST MANHOLE:
THE BOTTOM PRECAST SECTION SHALL IN ALL CASES BE CAST WITH THE BOTTOM END FLAT SO AS TO PROVIDE BEARING OF FULL WALL THICKNESS. BOTTOM SECTIONS SHALL BE SET IN 1:2 CEMENT MORTAR.
JOINTS ON PRECAST SECTIONS SHALL BE THE SAME AS JOINTS ON STORM SEWER.

STANDARD STORM MANHOLE

CONC. BLOCK MANHOLE:
APPROVED CONC. BLOCK
USE 6" OR 8" THICK BLOCK TO 16' DEPTH
USE 12" THICK BLOCK TO 24' DEPTH
16" BLOCK WALL BELOW 24' DEPTH

PRECAST MANHOLE:
C-478 UP TO 32' DEPTH
WITH 5" THICK WALL.

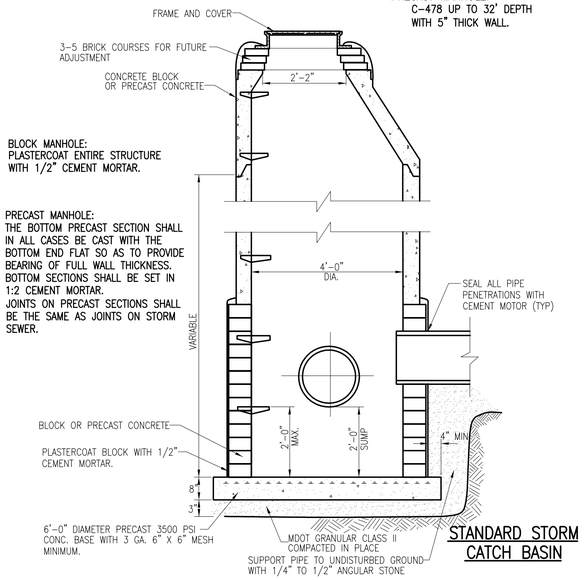

BLOCK MANHOLE:
PLASTERCOAT ENTIRE STRUCTURE WITH 1/2" CEMENT MORTAR.

PRECAST MANHOLE:
THE BOTTOM PRECAST SECTION SHALL IN ALL CASES BE CAST WITH THE BOTTOM END FLAT SO AS TO PROVIDE BEARING OF FULL WALL THICKNESS. BOTTOM SECTIONS SHALL BE SET IN 1:2 CEMENT MORTAR.
JOINTS ON PRECAST SECTIONS SHALL BE THE SAME AS JOINTS ON STORM SEWER.

STANDARD STORM CATCH BASIN

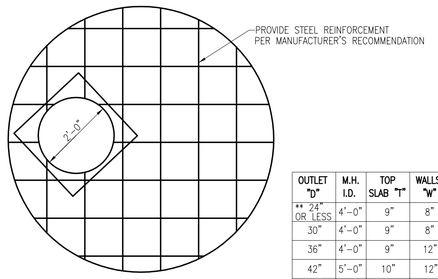

TOP SLAB

OUTLET "D"	M.H. I.D.	TOP SLAB "T"	WALLS "W"	REINF. STEEL *
** 24" OR LESS	4'-0"	9"	8"	#6 @ 9" EA. WAY
30"	4'-0"	9"	8"	#6 @ 9" EA. WAY
36"	4'-0"	9"	12"	#6 @ 9" EA. WAY
42"	5'-0"	10"	12"	#6 @ 9" EA. WAY
48" 54"	6'-0"	11"	12"	#7 @ 9" EA. WAY

* TOP SLAB
** 2' SUMP REQ. FOR MANHOLE WITH OUTLETS OF 18" AND UNDER.

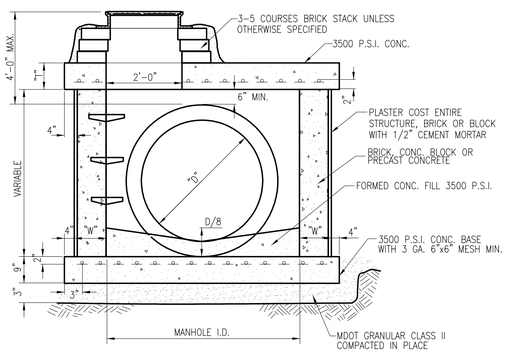

TYPICAL SECTION MANHOLE "D" (LOW HEAD)

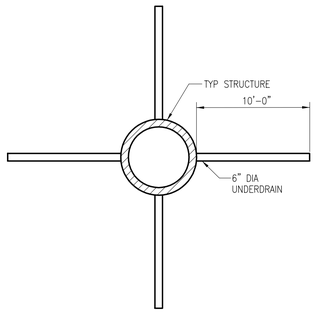

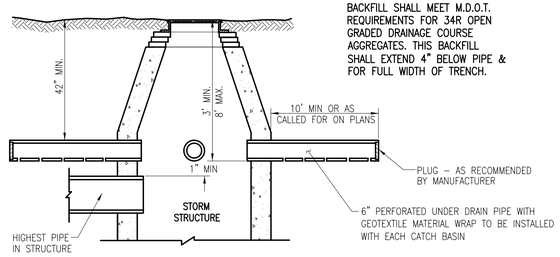

NOTE:
BACKFILL SHALL MEET M.D.O.T. REQUIREMENTS FOR 34R OPEN GRADED DRAINAGE COURSE AGGREGATES. THIS BACKFILL SHALL EXTEND 4" BELOW PIPE & FOR FULL WIDTH OF TRENCH.

MANHOLE WITH UNDERDRAIN

NOTE:
OIL/WATER SEPARATOR MANHOLE SHALL BE 5'DIAMETER STRUCTURE WITH 4' SUMP AND 6" OF EXTENSION OF SUBMERGED TEE. PROVIDE MANHOLE TOP.

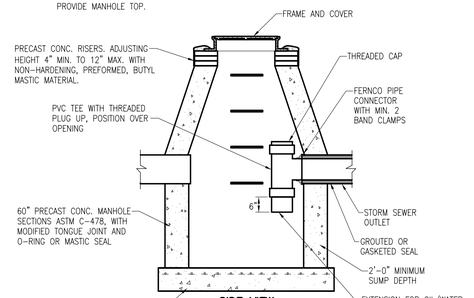

SIDE VIEW

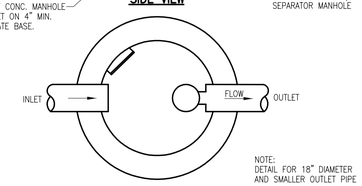

NOTE:
DETAIL FOR 18" DIAMETER AND SMALLER OUTLET PIPE

PLAN VIEW

ENVIRONMENTAL CATCH BASIN/MANHOLE

OHM

DATE	BID DATE	CADD	ENGINEER	PROJ MGR	SECTION	TOWN	RANGE
	####	####	####	####	####	####	####

CLIENT: ####
COUNTY: ####
CITY/VILLAGE/TOWNSHIP: ####
JOB #: ####
SCALE: H: 1"=40' V: 1"=4'
HORZ DATUM: ####
VERT DATUM: ####
DATE:
REVISIONS:
DATE:
REVISIONS:
DATE:
REVISIONS:

34000 Plymouth Road | Livonia, MI 48150 | P (734) 522-6711 | F (734) 522-6427 | WWW.OHM-ADVISORS.COM

COPYRIGHT 2007 OHM ALL DRAWINGS AND WRITTEN MATERIALS APPEARING HEREIN CONSTITUTE THE ORIGINAL AND UNPUBLISHED WORK OF OHM AND THE SAME MAY NOT BE DUPLICATED, DISTRIBUTED, OR DISCLOSED WITHOUT PRIOR WRITTEN CONSENT OF OHM

SCIO TOWNSHIP
STORM SEWER DETAILS

SHEET
#####
OF ####

DRAWING PATH: S:\CVT\Scio\Twp\Standards\CADD\STD_STM\STM DETAILS.DWG May 29, 2007 - 3:14pm

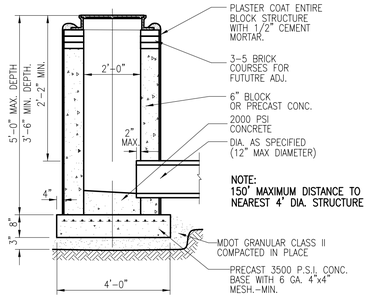

STANDARD INLET

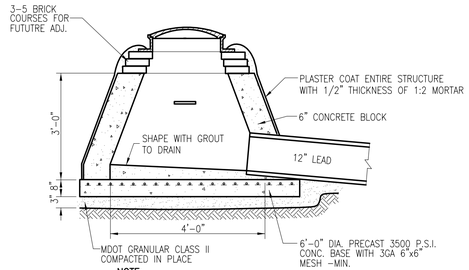

NOTE:
THIS STRUCTURE MAY ONLY BE USED APON APPROVAL FROM SCIO TOWNSHIP OR TOWNSHIP ENGINEER.

YARD BASIN

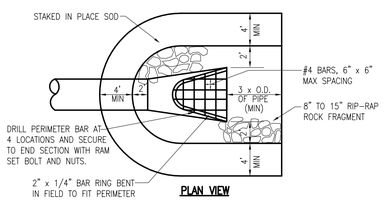

PLAN VIEW

NOTE:
MINIMUM REQUIREMENTS FOR RIP-RAP MATERIAL SHALL MEET MDOT SPECIFICATION 8.19.02

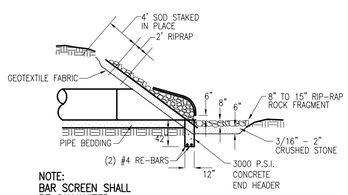

NOTE:
BAR SCREEN SHALL BE GALVANIZED

PROFILE VIEW

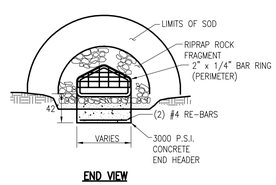

END VIEW

RIP RAP SCHEDULE

PIPE DIA	SY
12"	4
15"	4
18"	4
21"	5
24"	6
27"	7
30"	8
36"	10
42"	12
48"	14

GRATE & END SECTION

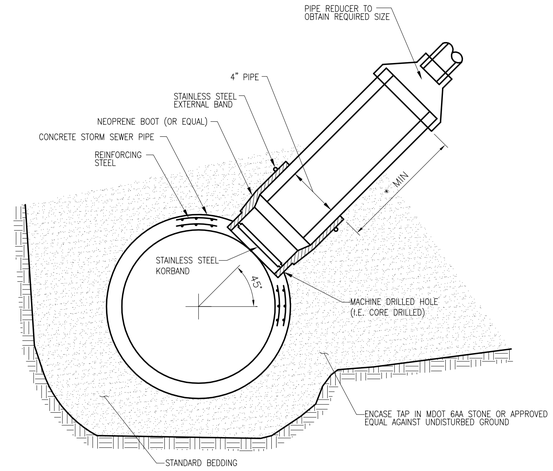

NOTE:
CONNECTION DETAIL FOR DIRECTLY TAPING A SUMP INTO THE PIPE WALL OF EXISTING OR PROPOSED CONCRETE SEWER

SUMP TAP FOR
FOR CONCRETE PIPE

SCIO TOWNSHIP
STANDARD STORM SEWER CONSTRUCTION NOTES

1. ALL CONSTRUCTION PROCEDURES AND MATERIALS USED ON ALL STORM SEWER PROJECTS SHALL CONFORM TO THE CURRENT SCIO TOWNSHIP ENGINEERING STANDARDS AND DESIGN SPECIFICATIONS MANUAL.

2. ALL MANHOLE RIMS SHALL BE SET TO GRADE AS FURNISHED BY THE ENGINEER.

3. THE MINIMUM ALLOWABLE COVERAGE OVER PIPE IS 3 FEET. LOW-HEAD STRUCTURES SHALL BE INSTALLED IN LOCATIONS WHERE THE COVER OVER TOP OF PIPE IS 4 FEET OR LESS.

4. ALL STORM SEWER SHALL BE INSTALLED TO THE GRADE SPECIFIED ON THE PLANS.

5. SUMP PUMP LEADS SHALL BE CONNECTED INTO AN ENCLOSED SYSTEM AND SHALL BE TAPPED DIRECTLY INTO THE STORM SEWER OR A STORM SEWER STRUCTURE. AT A MINIMUM, A 4 INCH CONNECTION WITH A BOOT SHALL BE USED AND WILL BE ALLOWED TO DISCHARGE UNRESTRICTED.

STORM SEWER MATERIALS

6. STORM SEWER PIPE SHALL BE REINFORCED CONCRETE PIPE CONFORMING TO THE CURRENT ASTM "SPECIFICATIONS FOR REINFORCED CONCRETE CULVERT, STORM DRAIN AND SEWER PIPE, ASTM C-76 FOR CIRCULAR PIPE OR ASTM C-507 FOR ELLIPTICAL PIPE, LATEST REVISION. IF OTHER MATERIALS ARE PROPOSED FOR USE, THE DESIGN ENGINEER WILL FURNISH LOAD CARRYING DESIGN ANALYSIS FOR THE PIPE FOR THE PROPOSED DEPTH AND CONDITIONS.

7. CORRUGATED METAL PIPE CULVERTS SHALL CONFORM TO AASHTO M36 OR ASTM A760, LATEST REVISION. PIPE SHALL BE GALVANIZED UNLESS OTHERWISE NOTED ON THE DRAWINGS.

8. MODIFIED GROOVE TONGUE PIPE JOINTS SHALL HAVE A RUBBER GASKET SNAPPED INTO A GROOVE CAST INTO THE TONGUE. RUBBER GASKET JOINTS SHALL BE LUBRICATED AND COUPLED IN ACCORDANCE WITH PIPE MANUFACTURER'S PRINTED INSTRUCTIONS. CORRUGATED METAL PIPE JOINTS SHALL BE CORRUGATED COUPLING TYPE WITH ALL MATERIALS GALVANIZED IN ACCORDANCE WITH AASHTO M36, LATEST REVISION.

9. MANHOLES AND CATCH BASINS SHALL BE CONSTRUCTED IN ACCORDANCE WITH THE ACCOMPANYING SCIO TOWNSHIP STANDARD DETAILS. PRECAST REINFORCED CONCRETE MANHOLE/CATCH BASIN SECTIONS SHALL CONFORM TO THE REQUIREMENTS OF ASTM C-478, LATEST REVISION. BRICK FOR CASTING ADJUSTMENTS OR CONCRETE BLOCK FOR MANHOLE, INLET, OR CATCH BASIN CONSTRUCTION SHALL CONFORM TO THE REQUIREMENTS OF THE MDOT STANDARD SPECIFICATIONS FOR CONSTRUCTION, LATEST REVISION. A MINIMUM OF THREE TO A MAXIMUM OF SIX ADJUSTMENT COURSES SHALL BE PLACED ABOVE THE TOP OF THE CONE SECTION ON ALL PRECAST OR BLOCK MANHOLES/CATCH BASINS.

10. MANHOLE COVERS AND FRAMES SHALL BE EAST JORDAN IRON WORKS #1040 WITH TYPE "B" COVER OR APPROVED EQUAL. PAVEMENT CATCH BASIN AND INLET FRAMES AND GRATES SHALL BE IN ACCORDANCE WITH THE REQUIREMENTS OF THE WASHTENAW COUNTY ROAD COMMISSION. LAWN CATCH BASIN AND INLET FRAMES AND GRATES SHALL BE EAST JORDAN IRON WORKS #1000 WITH TYPE "N" GRATE OR APPROVED EQUAL. DITCH CATCH BASIN FRAMES AND GRATES SHALL BE EAST JORDAN IRON WORKS #1000 WITH TYPE 01 BEEHIVE GRATE OR APPROVED EQUAL.

OHM
34000 Plymouth Road | Livonia, MI 48150 | P (734) 522-6711 | F (734) 522-6427 | WWW.OHM-ADVISORS.COM

COPYRIGHT 2007 OHM ALL DRAWINGS AND WRITTEN MATERIALS APPEARING HEREIN CONSTITUTE THE ORIGINAL AND UNPUBLISHED WORK OF OHM AND THE SAME MAY NOT BE DUPLICATED, DISTRIBUTED, OR DISCLOSED WITHOUT PRIOR WRITTEN CONSENT OF OHM

DATE | BID DATE #### | CADD #### | ENGINEER #### | PROJ MGR. #### | SECTION #### | TOWN #### | RANGE ####
REVISIONS: | DATE: | CLIENT: #### | VERT DATUM ####
REVISIONS: | DATE: | JOB # ##### | HORZ DATUM #### | SCALE H: 1"=40' V: 1"=4'
REVISIONS: | DATE: | COUNTY #### | CITY/VILLAGE/TOWNSHIP ####

SCIO TOWNSHIP
STORM SEWER DETAILS

SHEET
#####
OF #####

DRAWING PATH: S:\CVTSsdoTwp\Standards\CADD\STD_STM\STM DETAILS.DWG May 29, 2007 - 3:17pm

DIA. OF WATER MAIN	THRUST BLOCK		
D	A	B	C
6"	1'8"	1'8"	9"
8"	2'0"	2'0"	12"
12"	3'0"	3'0"	15"
16"	4'0"	4'0"	18"
20"	6'0"	4'0"	21"
24"	7'0"	5'0"	2'0"

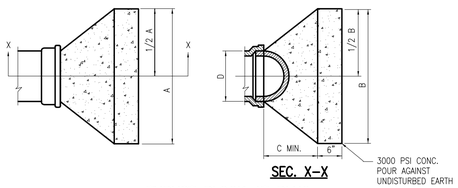

SEC. X–X

THRUST BLOCK AT PLUG

THRUST BLOCKS ALLOWED ONLY WITH APPROVAL OF UTILITIES DIRECTOR

DIA. OF WATER MAIN	THRUST BLOCK		
D	A	B	C
8"	2'0"	1'8"	15"
12"	3'3"	2'0"	18"
16"	4'0"	3'0"	21"

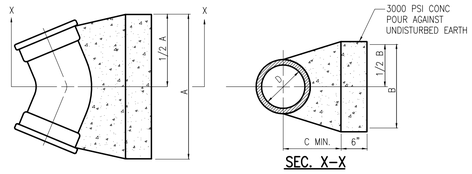

SEC. X–X

THRUST BLOCK AT 45° BEND

THRUST BLOCKS ALLOWED ONLY WITH APPROVAL OF UTILITIES DIRECTOR

DIA. OF WATER MAIN	THRUST BLOCK		
D	A	B	C
16"	2'0"	1'8"	12"
20"	2'6"	2'0"	15"
24"	2'9"	2'6"	18"

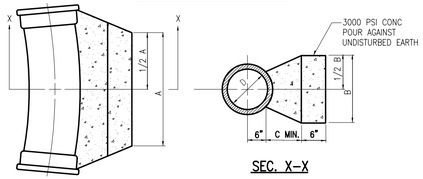

SEC. X–X

THRUST BLOCK AT 11 1/4° BEND

THRUST BLOCKS ALLOWED ONLY WITH APPROVAL OF UTILITIES DIRECTOR

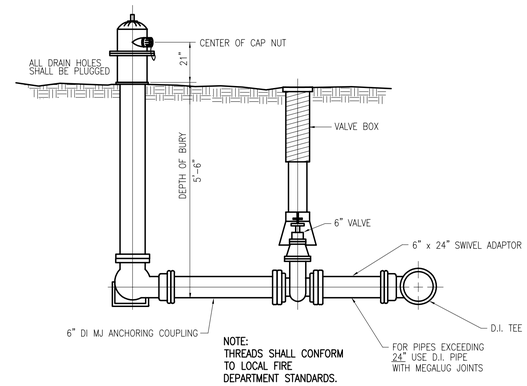

DIA. OF WATER MAIN		THRUST BLOCK	
D		A	C
8"	8"	2'0"	21"
12"	8"	2'0"	21"
16"	8"	2'0"	21"
12"	12"	3'0"	2'0"
16"	12"	3'0"	2'0"
20"	12"	3'0"	2'0"
24"	12"	3'0"	2'0"
16"	16"	4'0"	2'3"
20"	16"	4'0"	2'3"
24"	16"	4'0"	2'3"

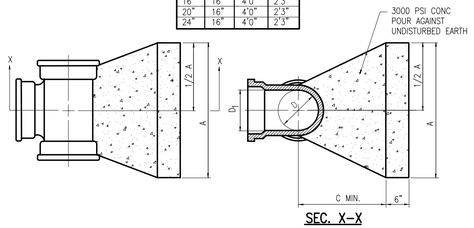

SEC. X–X

THRUST BLOCK AT TEE

THRUST BLOCKS ALLOWED ONLY WITH APPROVAL OF UTILITIES DIRECTOR

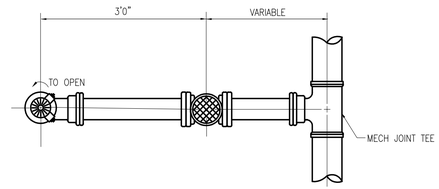

FIRE HYDRANT ASSEMBLY

DIA. OF WATER MAIN	THRUST BLOCK		
D	A	B	C
6"	2'0"	1'8"	9"
8"	2'9"	2'0"	12"
12"	4'0"	3'0"	15"
16"	5'6"	4'0"	18"

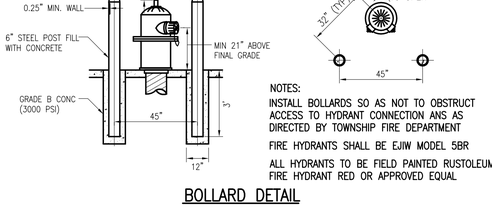

SEC. X–X

THRUST BLOCK AT 90° BEND

THRUST BLOCKS ALLOWED ONLY WITH APPROVAL OF UTILITIES DIRECTOR

DIA. OF WATER MAIN	THRUST BLOCK		
D	A	B	C
12"	2'0"	2'1"	18"
16"	3'0"	2'0"	21"
20"	3'9"	2'6"	2'0"

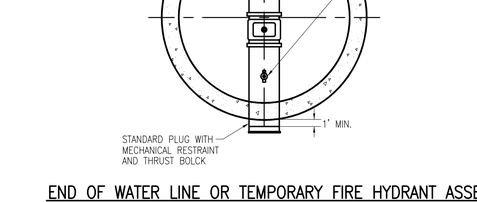

SEC. X–X

THRUST BLOCK AT 22 1/2° BEND

THRUST BLOCKS ALLOWED ONLY WITH APPROVAL OF UTILITIES DIRECTOR

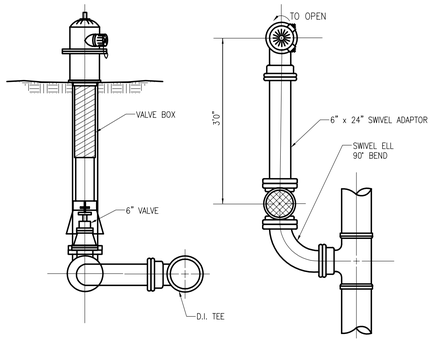

CLOSE COUPLE HYDRANT SETTING

NOTES:

INSTALL BOLLARDS SO AS NOT TO OBSTRUCT ACCESS TO HYDRANT CONNECTION ANS AS DIRECTED BY TOWNSHIP FIRE DEPARTMENT

FIRE HYDRANTS SHALL BE EJIW MODEL 5BR

ALL HYDRANTS TO BE FIELD PAINTED RUSTOLEUM FIRE HYDRANT RED OR APPROVED EQUAL

BOLLARD DETAIL

NOTES:

INSTALL ADDITIONAL FITTINGS PIPE AS NECESSARY BETWEEN WATER MAIN & VALVE BOX TO ADJUST FOR PROPER LOCATION & GRADE OF HYDRANT ALL JOINTS ARE TO BE RESTRAINED WITH SWIVEL GLANDS.

HYDRANTS SHALL BE SUPPLIED WITH THE "HYDRA STORZ" NOZZLE OR APPROVED EQUAL

END OF WATER LINE OR TEMPORARY FIRE HYDRANT ASSEMBLY

NOTE:

END OF WATER LINE OR TEMPORARY FIRE HYDRANT ASSEMBLY ONLY USED AS APPROVED BY SCIO TOWNSHIP UTILITIES DEPARTMENT OR TOWNSHIP ENGINEER.

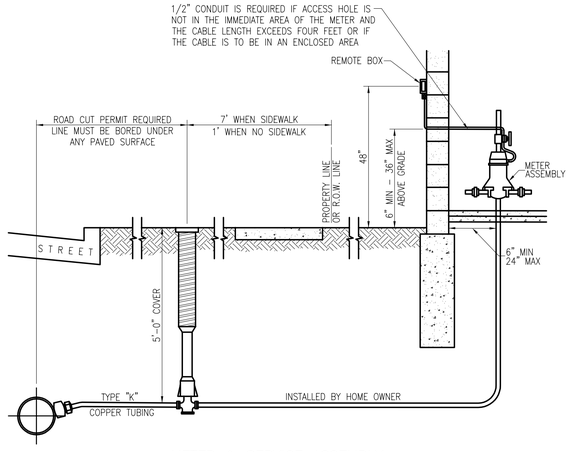

METER & SERVICE ASSEMBLY

NOTES:

NO WINDOW OR OBSTRUCTIONS ALLOWED ON OUTSIDE WALL ABOVE CONDUIT TO 4' ABOVE FINISHED GRADE.

REMOTE READER SHOULD BE LOCATED OUTSIDE OF ANY FENCED–IN AREA AND AWAY FROM BUSHES OR ANY OBSTRUCTIONS FOR EASY METER READER ACCESS.

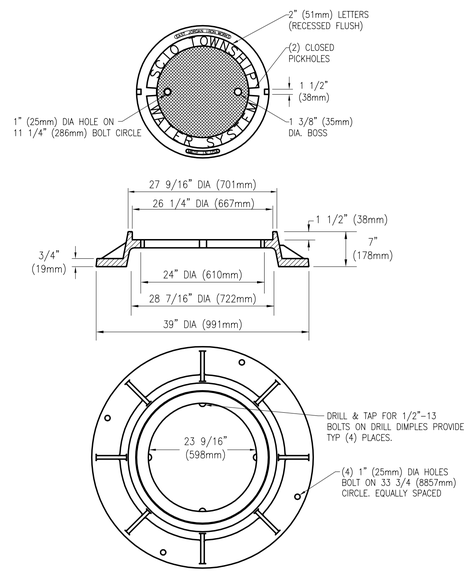

CAST IRON GATE WELL COVER AND GRADE RING

OHM

VERT DATUM ####
HORZ DATUM ####
SCALE H: 1"=40' V: 1"=4'
JOB # ####
CITY/VILLAGE/TOWNSHIP ####
COUNTY ####
DATE:
REVISIONS:
DATE:
REVISIONS:

34000 Plymouth Road | Livonia, MI 48150 | P (734) 522-6711 | F (734) 522-6427 | WWW.OHM-ADVISORS.COM

THE ORIGINAL AND UNPUBLISHED WORK OF OHM AND THE SAME MAY NOT BE DUPLICATED, DISTRIBUTED, OR DISCLOSED WITHOUT PRIOR WRITTEN CONSENT OF OHM
COPYRIGHT 2007 OHM ALL DRAWINGS AND WRITTEN MATERIALS APPEARING HEREIN CONSTITUTE THE ORIGINAL,

DESIGNED: ####
DRAWN: ####
CHECKED: ####
APPROVED: ####
DATE: ####
TOWN ####
RANGE ####
SECTION ####
PROJ MGR ####
ENGINEER ####
CADD ####
BID DATE ####
DATE

SCIO TOWNSHIP
WATER MAIN DETAILS

SHEET
#####
OF ####

DRAWING PATH: S:\CVT\ScioTwp\Standards\CADD\STD_WM\WM DETAILS.DWG May 29, 2007 - 3:11pm

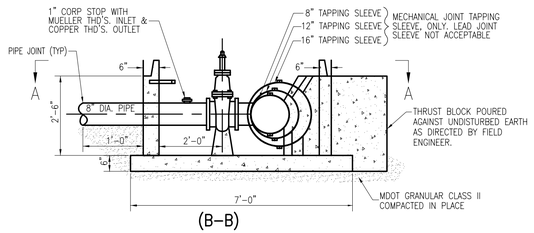

(B–B)

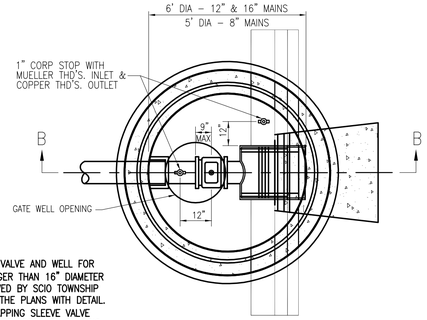

(PLAN VIEW, A–A)

NOTES:
TAPPING SLEEVE VALVE AND WELL FOR WATER MAIN LARGER THAN 16" DIAMETER MUST BE APPROVED BY SCIO TOWNSHIP AND SHOWN ON THE PLANS WITH DETAIL.
USE OF 8"x8" TAPPING SLEEVE VALVE AND WELL MUST BE APPROVED BY SCIO TOWNSHIP D.P.W.

8" TAPPING SLEEVE, VALVE & WELL

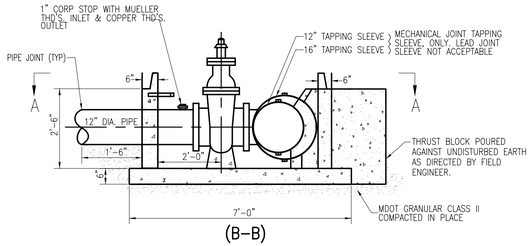

(B–B)

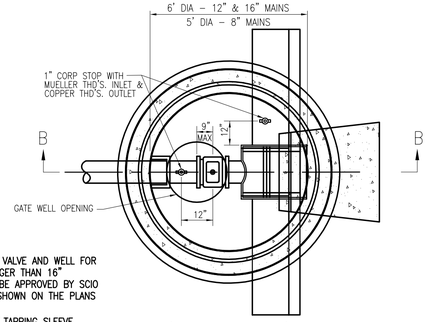

(PLAN VIEW, A–A)

NOTES:
TAPPING SLEEVE VALVE AND WELL FOR WATER MAIN LARGER THAN 16" DIAMETER MUST BE APPROVED BY SCIO TOWNSHIP AND SHOWN ON THE PLANS WITH DETAIL.
USE OF 12"x12" TAPPING SLEEVE VALVE AND WELL MUST BE APPROVED BY SCIO TOWNSHIP D.P.W.

12" TAPPING SLEEVE, VALVE & WELL

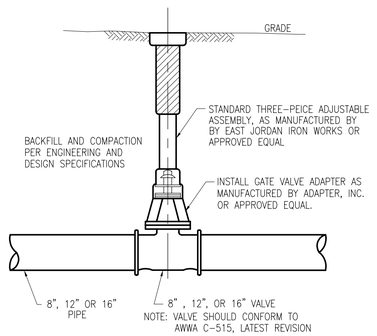

STANDARD GATE VALVE & BOX

PIPE RESTRAINT SCHEDULE

Ground buried pressure pipe – Ductile Iron Pipe

PIPE DIAMETER	TEES, 90° PLUGS	45° BENDS	22 ½° BENDS	REDUCERS
6	40	25	25	30
8	55	25	25	30
12	80	35	25	55
16	100	40	25	60
24	135	56	25	65

Lengths of pipe restraint are given in feet.

If required, pipe diameter is not listed in this table; the next largest pipe shall be used.

This table is based on a test pressure of 180 PSI (operating pressure plus water hammer). For other test pressures, all values to be increased or decreased proportionally.

The values provided of restraint length are in each direction from the point of deflection or termination except for tees, at which only the branch in the direction of the stem.

If tie rods are used, use four rods minimum and add 1/8-inch to bar diameter as corrosion allowance.

Size reduction is based upon the pipe diameter shown in this table.

Based upon:
Internal Pressure: 180
Pipe Depth: 5
Bedding Class: Type 4
Soil Type: Good Sand
Safety Factor: 2

NOTES:
PRECAST CONCRETE GATE WELL SECTIONS SHALL BE MANUFACTURED IN ACCORDANCE WITH A.S.T.M. DESIGNATION C478 UNLESS OTHERWISE SPECIFIED

ECCENTRIC CONES ARE ALLOWED PROVIDED GATE VALVE IS CENTERED ON MANHOLE OPENING

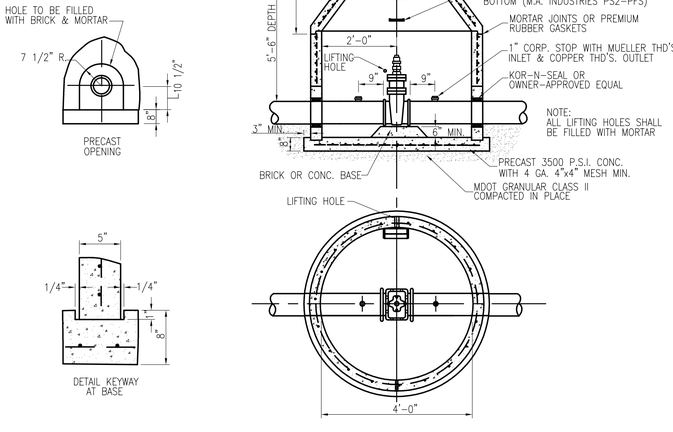

6", 8" & 12" GATE VALVE & WELL

NOTE:
PRECAST CONC. GATE WELL SECTIONS SHALL BE MANUFACTURED IN ACCORDANCE WITH A.S.T.M. DESIGNATION C478 UNLESS OTHERWISE SPECIFIED.

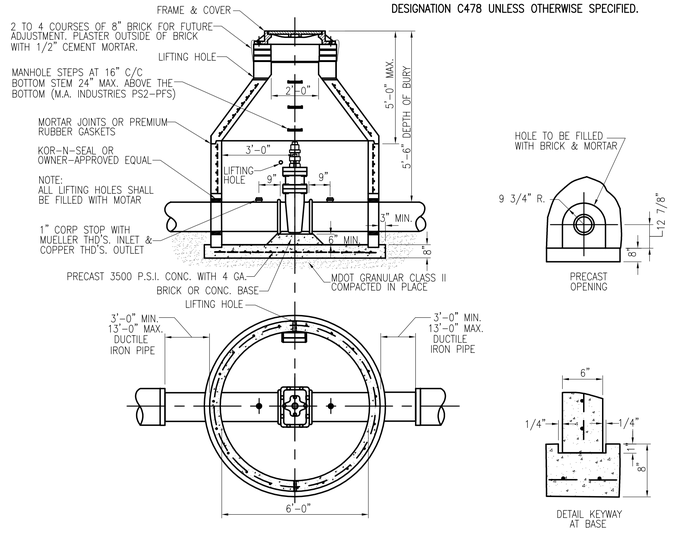

16" GATE VALVE & WELL

SCIO TOWNSHIP
STANDARD WATER MAIN CONSTRUCTION NOTES

1. ALL CONSTRUCTION PROCEDURES AND MATERIALS USED ON ALL WATER MAIN PROJECTS SHALL CONFORM TO THE CURRENT SCIO TOWNSHIP ENGINEERING STANDARDS AND DESIGN SPECIFICATIONS MANUAL.
2. NO INSTALLATION OF WATER MAIN SHALL TAKE PLACE WITHOUT TOWNSHIP'S INSPECTOR BEING PRESENT. UNLESS OTHERWISE SPECIFIED ON THE PLANS, TOP OF ALL WATER MAINS SHALL BE 5.5 FEET BELOW EXISTING OR PROPOSED GROUND, WHICHEVER APPLIES. 18 INCHES MINIMUM VERTICAL CLEARANCE SHALL BE MAINTAINED AT ALL EXISTING AND PROPOSED UTILITY CROSSINGS.
3. A MECHANICAL JOINT RESTRAINT SYSTEM SUCH AS MEGA LUGS OR LOCKING GASKETS SHALL BE USED FOR JOINT RESTRAINT INSTEAD OF CONCRETE THRUST BLOCKS.
4. POLY–WRAP SHALL BE USED AS REQUIRED BY SCIO TOWNSHIP.
5. A MINIMUM OF 10 FEET HORIZONTAL SEPARATION MUST BE MAINTAINED BETWEEN WATER MAIN AND SANITARY SEWERS, LEADS AND/OR STORM SEWERS. A MINIMUM OF 5 FEET HORIZONTAL SEPARATION MUST BE MAINTAINED BETWEEN WATER MAINS AND ANY UNDERGROUND UTILITY STRUCTURES AS MEASURED FROM THE OUTSIDE WALL OF ANY STRUCTURE.
6. WHERE WORK IS TO BE PERFORMED IN THE VICINITY OF A SCIO TOWNSHIP MAIN, CONTRACTOR SHALL NOTIFY THE UTILITIES DEPARTMENT AT LEAST THREE WORKING DAYS PRIOR TO START OF CONSTRUCTION AND SCHEDULE AN INSPECTOR IF NECESSARY.
7. CONTACT MISS DIG AT 1–800–482–7171 THREE WORKING DAYS BEFORE DIGGING.
8. WHERE WATER MAIN IS LOCATED UNDER PAVEMENT, SCIO TOWNSHIP WILL NOT BE RESPONSIBLE FOR REPAIRING PAVEMENT WITHIN THE EASEMENT IN THE EVENT THAT MAINTENANCE OR REPAIRS TO THE WATER MAIN BECOME NECESSARY.

WATER MAIN MATERIALS

1. ALL WATER MAINS SHALL BE DUCTILE IRON MANUFACTURED IN ACCORDANCE WITH AWWA C151 (ANSI A21.51), LATEST REVISION. PIPE SHALL BE A MINIMUM STANDARD WALL THICKNESS CLASS 54 FOR PIPE DIAMETERS OF 6 THRU 16 INCH INCLUSIVE, THICKNESS CLASS 55 FOR 20 INCH, AND THICKNESS CLASS 56 FOR LARGER THAN 20 INCH. PIPE SHALL BE STANDARD CEMENT DOUBLE THICKNESS LINED IN ACCORDANCE WITH AWWA C104 (ANSI A21.4), LATEST REVISION. PIPE EXTERIOR SHALL BE SEAL COATED WITH AN APPROVED BITUMINOUS SEAL COAT.
2. JOINTS FOR WATER MAIN SHALL BE PUSH–ON TYPE CONFORMING TO AWWA C111 (ANSI A21.11) STANDARD SPECIFICATION, LATEST REVISION. RUBBER GASKETS, RETAINER GLANDS, AND LUBRICANT SHALL BE FURNISHED WITH THE PIPE AND SHALL MEET THE PIPE MANUFACTURER'S REQUIREMENTS.
3. ALL HYDRANTS SHALL BE EAST JORDAN IRON WORKS MODEL 5BR 250 OR MUELLER A–425 SUPER CENTURION 250 AND SHALL CONFORM TO AWWA C–502, LATEST REVISION. THE FIRE HYDRANT VALVE SHALL BE 5 ¼ INCH DIAMETER. IF HYDRANTS ARE FURNISHED WITH DRAIN HOLES, THE HOLES SHALL BE PLUGGED AND WATERTIGHT. ALL HYDRANTS SHALL BE INSTALLED WITH A SIX 6 INCH ISOLATION VALVE WITH AN APPROVED VALVE BOX, SET AT FINISHED GRADE AND CENTERED OVER THE VALVE–OPERATING NUT, FREE OF DIRT AND DEBRIS. HYDRANTS SHALL BE SET SO THE CENTERLINE OF THE NOZZLE IS 21 INCHES ABOVE FINISHED GRADE. THE CONTRACTOR SHALL PROVIDE ONE REPAIR KIT FOR EVERY FIVE HYDRANTS ADDED TO THE SYSTEM. HYDRANTS MUST BE PAINTED RUSTOLEUM "FIRE HYDRANT RED" AND SHALL OPEN IN A COUNTER–CLOCKWISE (LEFT) DIRECTION WITH A STANDARD 1–3/8 INCH PENTAGON NUT. HYDRANTS SHALL HAVE A CENTER STEM WITH A DOUBLE "O" RING SEAL. THE HYDRANT VALVE SHALL BE 5 ¼ INCH DIAMETER AND THE BARREL AND HEAD SHALL BE CAST IRON WITH A BREAKABLE TRAFFIC SAFETY FLANGE. HYDRANTS SHALL HAVE ONE 3–3/8 INCH PUMPER CONNECTION WITH 7 ½ THREADS PER INCH (ANN ARBOR STANDARDS) AND ONE 4–INCH STORZ CONNECTION. THE STORZ CONNECTION SHALL BE THE HARRINGTON INTEGRAL STORZ AND ATTACHED WITH A CABLE AND PRESSURE CAP. A NOZZLE CAP SHALL BE PROVIDED FOR THE 3–3/8 INCH CONNECTION, ATTACHED TO THE HYDRANT WITH A NON–LINKING CHAIN. ALL HYDRANTS SHALL HAVE 6–FEET OF BURY FROM THE TOP OF CURB.
4. GATE VALVES SHALL BE MANUFACTURED IN CONFORMANCE WITH THE APPLICABLE REQUIREMENTS OF AMERICAN WATER WORKS ASSOCIATION (AWWA) C509, LATEST REVISION. THE VALVES SHALL BE OF DUCTILE IRON BODY AND BONNET, FULLY BRONZE MOUNTED, WITH BRONZE STEMS. VALVES FOR WATER MAINS 16 INCH DIAMETER OR SMALLER SHALL BE RESILIENT SEATED WEDGE VALVES, EAST JORDAN IRON WORKS C515 OR MUELLER A–2360–20. VALVE STEMS SHALL BE BRONZE OF A NON–RISING DESIGN WITH DOUBLE "O" RING PACKING. GATE VALVES SHALL HAVE A 2 INCH SQUARE OPERATING NUT THAT TURNS RIGHT (CLOCKWISE) TO OPEN. GATE WELLS SHALL BE CONSTRUCTED OF REINFORCED CONCRETE SECTIONS IN ACCORDANCE WITH DETAILS SHOWN ON THE STANDARD PLANS. PRECAST REINFORCED CONCRETE GATE WELL SECTIONS SHALL CONFORM TO ASTM C478. ALL TAPPING SLEEVES AND VALVES ARE TO BE PLACED IN A GATE WELL UNLESS OTHERWISE SHOWN OR NOTED ON THE PLANS.

DRAWING PATH: S:\CVT\Sod1\wp\Standards\CADD\STD_WM\WM DETAILS.DWG May 30, 2007 - 6:42am

OHM

COUNTY ####
CITY/VILLAGE/TOWNSHIP ####
JOB # ####
SCALE H: 1"=40' V: 1"=4'
HORZ DATUM ####
VERT DATUM ####
DATE:
REVISIONS:
DATE:

CLIENT: ####
PROJ MGR ####
ENGINEER ####
CADD ####
BID DATE ####
DATE
REVISIONS:
DATE:

SCIO TOWNSHIP
WATER MAIN DETAILS

SHEET
#####
OF ####

34000 Plymouth Road | Livonia, MI 48150 | P (734) 522-6711 | F (734) 522-6427 | WWW.OHM-ADVISORS.COM

COPYRIGHT 2007 OHM ALL DRAWINGS AND WRITTEN MATERIALS APPEARING HEREIN CONSTITUTE THE ORIGINAL AND UNPUBLISHED WORK OF OHM AND THE SAME MAY NOT BE DUPLICATED, DISTRIBUTED, OR DISCLOSED WITHOUT PRIOR WRITTEN CONSENT OF OHM

8197 Jackson Road

SCIO TOWNSHIP, WASHTENAW COUNTY, MICHIGAN

EXISTING SANITARY SEWER INVENTORY:

SANITARY MANHOLE #1 T/CAS 906.80 (4' CONCRETE STRUCTURE) 6" N. I.E. 897.20 6" S. I.E. 897.30	SANITARY MANHOLE #3 T/CAS 907.82 (4' CONCRETE STRUCTURE) 8" E. I.E. 894.37 (VCP) 8" W. I.E. 894.47 (VCP)
SANITARY MANHOLE #2 T/CAS 906.33 (2' VCP STRUCTURE) 4" NW. I.E. 901.23 4" SE. I.E. 901.23	SANITARY MANHOLE #4 T/CAS 910.96 (4' CONCRETE STRUCTURE) 8" E. I.E. 893.71 (VCP) 8" W. I.E. 893.81 (VCP)

BENCHMARKS:

VERTICAL DATUM: NAVD 88
BENCHMARK #1: 899.54
60 D NAIL IN THE NORTH SIDE
OF 45" WHITE OAK.

VERTICAL DATUM: NAVD 88
BENCHMARK #2: 906.88
TOP OF WELL CASING

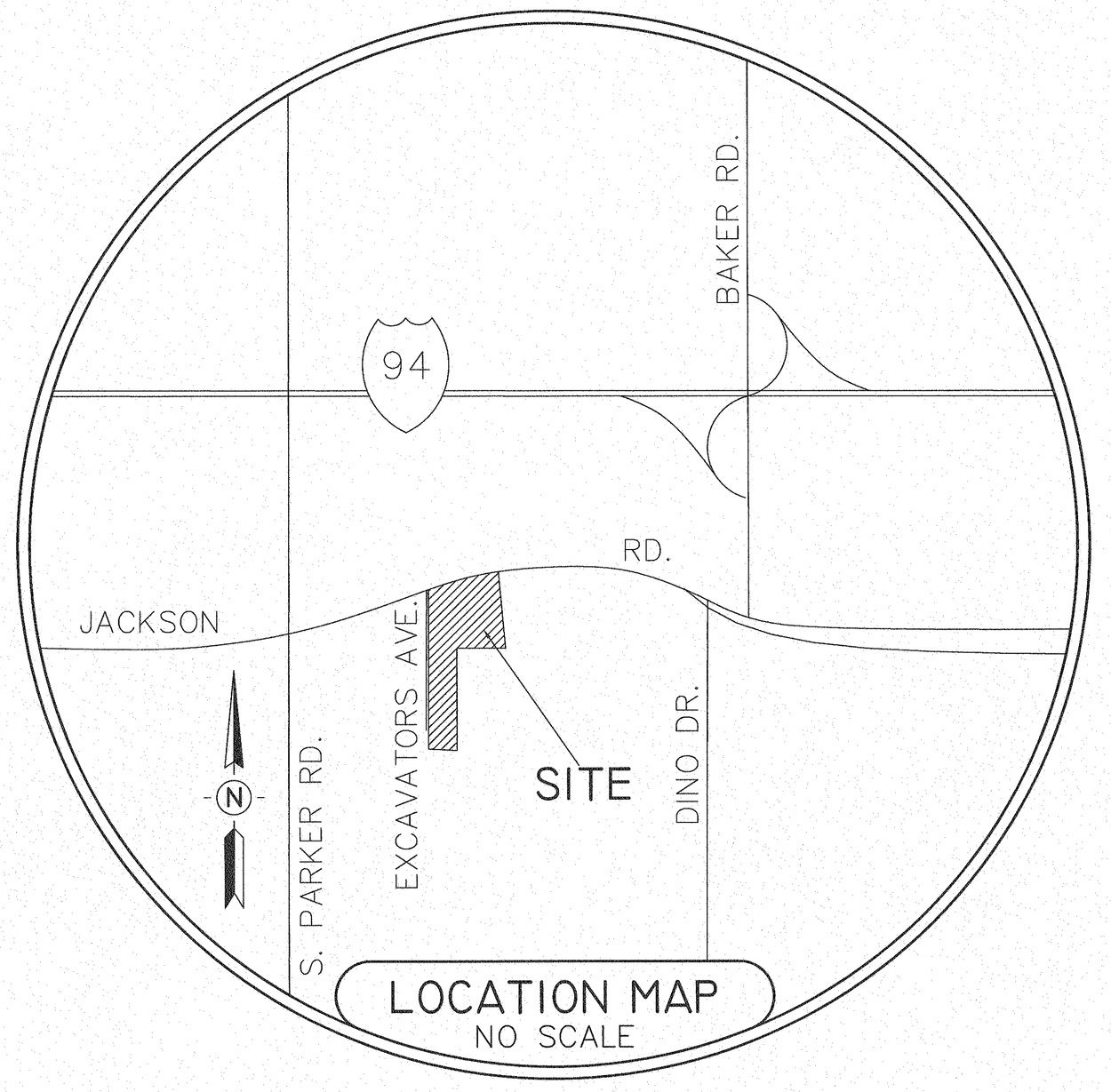

LOCATION MAP
NO SCALE

PARCEL #: H-08-19-275-012

LEGAL DESCRIPTION
(Taken from Warranty Deed, L. 4260, P. 219)

Township of Scio, County of Washtenaw, and State of Michigan, described as follows, to wit:

Beginning at the Southeast Corner of Lot 8, COLE AND HUSS SUBDIVISION, as recorded in Liber 8 of Plats, Page 39, Washtenaw County Records; thence North 89 degrees 57 minutes 00 seconds West 220.44 feet along the South Line of said Lot 8 and the East–West 1/4 line of Section 19, Town 2 South, Range 5 East, Scio Township, Washtenaw County, Michigan; thence North 00 degrees 40 minutes 00 seconds West 951.64 feet; thence North 73 degrees 18 minutes 00 seconds East 242.93 feet along the Northerly line of Lots 9 through 12, inclusive, COLE AND HUSS SUBDIVISION, to the Northeast Corner of said Lot 12; thence South 16 degrees 42 minutes 00 seconds East 330.00 feet to the Southeast Corner of said Lot 12; thence South 73 degrees 18 minutes 00 seconds West 110.66 feet to the Northeast corner of said Lot 8, thence South 00 degrees 52 minutes 00 seconds East 673.72 feet along the East line of said Lot 8 to the Place of Beginning, being a part of Lots 7, 8, and 9 and all of Lots 10, 11 and 12, COLE AND HUSS SUBDIVISION, as recorded in Liber 8 of Plats Page 39, Washtenaw County Records.

Being more particularly described as:

BEGINNING at the SE Corner of Lot 8 of "Cole and Huss Subdivision", as recorded in Liber 8 of Plats, Page 39, Washtenaw County Records,

thence N 89°57'00" W 220.44 feet along the E–W 1/4 line of Section 19, T2S, R5E, Scio Township, Washtenaw County, Michigan and the South line of said Lot 8; thence N 00°40'00" W 951.64 feet;
thence N 73°18'00" E 243.00 feet along the Northerly line of Lots 9–12 of said "Cole and Huss Subdivision";
thence S 16°42'00" E 330.00 feet along the Easterly line of Lot 12 of said "Cole and Huss Subdivision";
thence S 73°18'00" W 110.66 feet along the Southerly line of Lots 11 & 12 of said "Cole and Huss Subdivision";
thence S 00°50'39" E 673.79 feet along the East line of said Lot 8 to the POINT OF BEGINNING. Being a part Lots 7, 8, 9 and all of Lots 10, 11 & 12 of "Cole and Huss Subdivision" located in the NW 1/4 of said Section 19 and containing 5.43+/– acres of land, more or less. Being subject to the rights of the public over that portion of land, as occupied by Jackson Road (Variable Width). Being subject to easements and restrictions of record, if any.

Being subject to and together with a Reciprocal Easement Agreement as recorded in Liber 2446, Pages 398–400, Washtenaw County Records.

Project Description and Use

The E. T. MacKenzie Company proposes to construct a new 2,400 s.f., single story office building and associated parking lot, for its own use as the Ann Arbor division office, mechanic's shop and yard, on the property located at 8197 Jackson Road, Ann Arbor. The property is zoned I-1 Industrial and has a current Zoning Compliance Certificate, in the company name, for a contractors yard with outdoor storage. The current land uses around the property are: commercial and agriculture north of Jackson Road; agriculture zoning with a single family house to the east directly adjacent to Jackson Road; industrial east and south of the homes on Jackson Road; commercial and another contractor's yard directly west of the subject property. Our continued use of the property as an office, mechanic's shop and contractor's yard fits in with and would not preclude any of the objectives of the Township's Future Land Use Plan Jackson Parkway Special Planning Area 4.
The proposed office building is designed to serve seven full time employees of the company in individual office rooms. One conference room, one kitchen, one central copier/printer room and two bathrooms are included to support the employees. The building will have a full depth basement for storage of completed job files. The Ann Arbor division currently has five full time office employees.
The existing mechanic's shop will continue to be used as a mechanic's shop for the repair of company vehicles, trailers and equipment. Some limited storage of weather sensitive materials such as bagged cement and mortar, grass seed, fertilizer, straw mats etc. will also happen in the existing shop from time to time.
The existing yard will continue to be used for short term outdoor storage of materials such as: manholes, catch basins, castings, watermain & fittings, various pipe, conduits, also limited amounts of sand, gravel, topsoil etc. may be present on site from time to time. Parking of company trucks, trailers and equipment is short term and transitional in nature. Most of the time these items are in use on job sites and would sometimes be in the yard between jobs or for servicing.

APPLICANT/OWNER:	ENGINEER/SURVEYOR:
E.T. MACKENZIE COMPANY 4248 W. SAGINAW HWY. GRAND LEDGE, MI. 48837 PH: (517) 627–8408 FAX: (517) 627–4470	KEBS, Inc. 2116 HASLETT RD. HASLETT, MI. 48840 PH: (517) 339–1014 FAX: (517) 339–8047

SHEET INDEX

1. COVER SHEET
2. SITE & UTILITY PLAN
3 STORM & GRADING PLAN
4. SOIL EROSION CONTROL PLAN
5. LANDSCAPE & LIGHTING PLAN
6. EXISTING CONDITIONS PLAN/TREE REMOVAL PLAN
7. DETAIL SHEET 1
8. DETAIL SHEET 2

ATTACHMENTS:
STORM SEWER CALCULATIONS
DRAINAGE MAPS (2)
MUNICIPAL DETAILS/SPECIFICATIONS

EX. LEGEND

● = SET 1/2" BAR WITH CAP	= SANITARY MANHOLE
□ = FOUND IRON AS NOTED	= DRAINAGE MANHOLE
= DEED LINE	= ELECTRIC MANHOLE
= DISTANCE NOT TO SCALE	= TELEPHONE MANHOLE
= FENCE	= CATCHBASIN
= ASPHALT	= SANITARY CLEANOUT
= CONCRETE	= FIRE HYDRANT
= GRAVEL	= VALVE
860 = EXISTING SPOT ELEVATION	= UTILITY POLE
860 = EXISTING CONTOUR ELEVATION	= LIGHT POLE
= SANITARY SEWER	= GUY POLE
= STORM SEWER	= GUY WIRE
= WATER LINE	= UTILITY PEDESTAL
= GAS LINE	= TRANSFORMER
= UNDERGROUND TELEPHONE	= HANDHOLE
= UNDERGROUND TELEVISION	= ELECTRIC METER
= UNDERGROUND ELECTRIC	= GAS METER
= OVERHEAD WIRES	= WATER METER
= DECIDUOUS TREE	= SOIL BORING
	= SIGN
	= POST
= EVERGREEN TREE	= AIR CONDITIONING UNIT

LEGEND

PROPOSED WATER MAIN	
PROPOSED SANITARY SEWER	
PROPOSED STORM SEWER	
PROPOSED HYDRANT	
PROPOSED GATE VALVE	
PROPOSED SAN. M.H.	
PROPOSED STORM M.H.	
PROPOSED C.B.	
PROPOSED GRADES	



72 HOURS
(3 WORKING DAYS)
BEFORE YOU DIG
CALL MISS DIG
800-482-7171
(TOLL-FREE)

SITE ADDRESS: 8197 JACKSON RD., ANN ARBOR, MICHIGAN
PARCEL ID#: H-08-19-275-012

SURVEY# BY OTHERS

STATE OF MICHIGAN
GREGORY A. PETRU
ENGINEER NO. 50958
10-24-19
LICENSED PROFESSIONAL ENGINEER

REVISIONS
2-8-19 OWNER REVIEW
2-26-19 SITE PLAN SUBMITTAL
3-25-19 SITE PLAN SUBMITTAL
4-15-19 SITE PLAN SUBMITTAL
7-18-19 SITE PLAN REVISIONS
9-4-19 SITE PLAN REVISIONS
9-16-19 SITE PLAN REVISIONS
10-24-19 SITE PLAN REVISIONS

KEBS, INC. KYES ENGINEERING BRYAN LAND SURVEYS
2116 HASLETT ROAD, HASLETT, MI 48840
PH. 517-339-1014 FAX. 517-339-8047
Marshall Office
Ph. 269-781-9800

8197 Jackson Road
COVER SHEET

SCALE: NONE	DESIGNER: GAP	APPROVED BY: JWK
DATE: 1-28-19	PROJECT MGR. JWK	SHEET 1 OF 8
AUTHORIZED BY: E.T. MACKENZIE COMPANY		JOB #: 94729

8197 Jackson Road

SCIO TOWNSHIP, WASHTENAW COUNTY, MICHIGAN

APPLICANT/OWNER:
E.T. MACKENZIE COMPANY
4248 W. SAGINAW HWY.
GRAND LEDGE, MI. 48837
PH: (517) 627-8408
FAX: (517) 627-4470

ENGINEER/SURVEYOR:
KEBS, Inc.
2116 HASLETT RD.
HASLETT, MI. 48840
PH: (517) 339-1014
FAX: (517) 339-8047



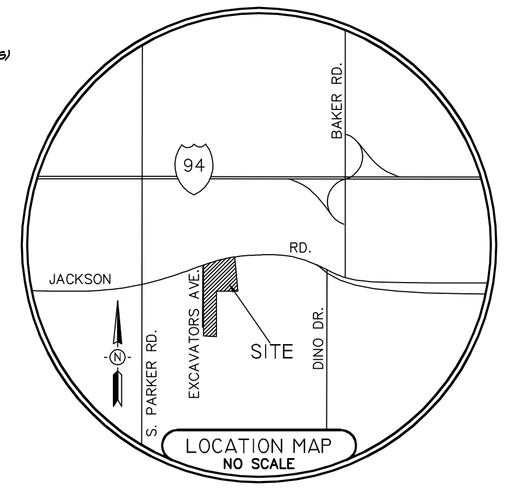

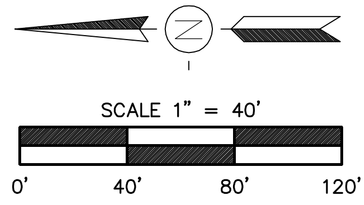

EXISTING SANITARY SEWER INVENTORY:

SANITARY MANHOLE #1 T/CAS 906.80 (4' CONCRETE STRUCTURE) 8" N. I.E. 897.20 6" S. I.E. 897.30	SANITARY MANHOLE #3 T/CAS 907.82 (4' CONCRETE STRUCTURE) 8" E. I.E. 894.37 (VCP) 8" W. I.E. 894.47 (VCP)
SANITARY MANHOLE #2 T/CAS 906.33 (2' VCP STRUCTURE) 4" NW. I.E. 901.23 4" SE. I.E. 901.23	SANITARY MANHOLE #4 T/CAS 910.96 (4' CONCRETE STRUCTURE) 8" E. I.E. 893.71 (VCP) 8" W. I.E. 893.81 (VCP)

BENCHMARKS:

VERTICAL DATUM: NAVD 88
BENCHMARK #1: 899.54
60 D NAIL IN THE NORTH SIDE
OF 45" WHITE OAK.

VERTICAL DATUM: NAVD 88
BENCHMARK #2: 906.88
TOP OF WELL CASING

ZONING: A-1
H-08-19-275-011
EX. LAND USE: RESIDENTIAL
LANKTON, SCOTT M.
8171 JACKSON ROAD
ANN ARBOR, MI. 48103

ZONING: A-1
H-08-19-275-011
EX. LAND USE: GRASSLAND & SHRUB/VACANT
LANKTON, SCOTT M.
8171 JACKSON ROAD
ANN ARBOR, MI. 48103

ZONING: IRP.
H-08-19-200-000
EX. LAND USE: OFFICE
COMMERCIAL PROPERTIES INVESTORS
8178 JACKSON ROAD
ANN ARBOR, MI. 48103

ZONING: IRP
H-08-19-200-022
EX. LAND USE: AGRICULTURE
SMITH, MURRAY J.A.
10250 M-52
MANCHESTER, MI. 48158

ZONING: IRP
H-08-19-275-020
EX. LAND USE: AGRICULTURE
GARY WRIGLEY & JEFFREY BALAKA
6544 JACKSON ROAD
ANN ARBOR, MI. 48103

ZONING: IRP
EX. LAND USE INDUSTRIAL

H-08-19-275-021
KRZYZANIAK, DAVID & SUE
7051 STILES DR.
ANN ARBOR, MI. 48103

ZONING: A-1
EX. LAND USE AGRICULTURE

H-08-19-001
NGA MOBILITY, LLC
ZHENG-DONG MA
4992 S. RIDGESIDE CR.
ANN ARBOR, MI. 48103

SANITARY/WATER CROSSING
1" WATER I.E. ±903.50
8" SANITARY I.E. ±893.98

CONTACT MISS DIG TO LOCATE ALL UTILITIES IN R.O.W. FOR DIRECTIONAL DRILL WORK.

DIRECTIONAL BORE (100 LF) OF 1" WATER SERVICE (WATER TO BE MINIMUM OF 5.5' BELOW GRADE) 157 LF 1" TYPE 'K' COPPER or SCIO TWP. APPROVED)

150 LF 4" PVC SCH 40 SAN LEAD @ 3.00%

CONNECT TO EX. 6"x4" WYE, (FIELD LOCATE) (I.E. ±897.35)

20 LF 8" SCH 40 PVC @ 1.0% EAST I.E. 908.40 WEST I.E. 908.20

I.E. 4" ±901.85

1" CURB STOP

65 L.F. 15" C-76 CL IV STORM @ 0.80% W/ RODENT GUARD

EX. 18" CMP
18" I.E. E 905.70
18" I.E. W 905.77

EX. 18" CMP
18" I.E. N 901.11
18" I.E. S 900.22

EX. 24" STORM
24" I.E. N 889.01
24" I.E. S 888.59

26 LF 12" STORM @ 0.30% W/ F.E.S. & RODENT GUARD
12" I.E. 889.02

EX. 12" STORM
12" I.E. N 892.90
12" I.E. S 892.90

S16°42'00"E 330.00'

S73°18'00"W 110.66'

S00°50'39"E 673.79'(M)
673.72'(R)

N73°18'00"E 243.93'(R)
243.00'(M)

N00°40'00"W 951.64'

N89°57'00"W 220.44'

E. LINE LOT 8

S. LINE LOTS 11 & 12

E-W 1/4 LINE SEC. 19, T2S, R5E S. LINE LOT 8

JACKSON RD. (VARIABLE WIDTH-PUBLIC)

JACKSON RD. RIGHT-OF-WAY PER LIBER 225.

66' WIDE RECIPROCAL EASEMENT AGREEMENT LIBER 2446, PGS. 398-400

PROPOSED BUILDING

PROPOSED CANOPY LIGHT

PROP. BIKE PARKING (2)

PROP. FENCE - 6' HIGH (SEE LANDSCAPE PLAN)

REMOVE TREE

EX. WELL

BENCHMARK #2

EX. FUEL TANKS (2) W/INTEGRAL SECONDARY CONTAINMENT
EX. CONCRETE BASE PADS
= 192 S.F. (SEE DETAILS, PG. 8)

FUELING STATION
(EX. FUEL TANKS (2) (CONC. BASE & SECONDARY CONTAINMENT (2))

EX. TRANSFORMER

EX. WALL LIGHT

EX. LIGHT POLE (REPLACE FIXTURE)

60'x14' LOADING SPACE

LOADING/UNLOADING SIGN ON LIGHT POLE

PROPOSED SCREENED DUMPSTER (SEE DETAIL, LANDSCAPE PLAN)

PROPOSED GRAVEL EDGE

PROPOSED DETENTION AREA

PROPOSED SEDIMENT FOREBAY

EX. GRAVEL

EX. CABLE

EX. UNDERGROUND ELECTRIC

EX. GATE

EX. SIGN

PROP. SIGN

EX. SA#1 (MONITORING MH)

EX. SA#2

EX. SA#3

EX. SA#4

EXISTING ENTRANCE

WHEEL STOPS

B/F SIGN

PROPOSED ASPHALT

EX. 6" WATER

EX. R.O.W.

EX. 8" SAN

EX. 8" WATER

5' WALK

6" WALK

20' BLDG. SETBACK

35' BLDG. SETBACK

50' BLDG. SETBACK

F IRON ROD
2.4' N.
0.5' E. OF
PROP. COR.

F IRON ROD
0.3' N.
0.8' W. OF
PROP. COR.

F IRON PIPE
0.5' N.
0.3' W. OF
PROP. COR.

F IRON PIPE
0.4' N.
2.7' W. OF
PROP. COR.

S.E. CORNER LOT 8, COLE & HUSS SUB'D.

FENCE CORNER 1.0' N. 2.2' W. OF PROP. COR.

FENCE CORNER 0.3' W. OF P/L

Ex. Bldg

Ex. Bldg

Ex. Bldg

LEGEND

- PROPOSED WATER MAIN
- PROPOSED SANITARY SEWER
- PROPOSED STORM SEWER
- PROPOSED HYDRANT
- PROPOSED GATE VALVE
- PROPOSED SAN. M.H.
- PROPOSED STORM M.H.
- PROPOSED C.B.
- PROPOSED GRADES

EX. LEGEND

- = SET 1/2" BAR WITH CAP
- = FOUND IRON AS NOTED
- = DEED LINE
- = DISTANCE NOT TO SCALE
- = FENCE
- = ASPHALT
- = CONCRETE
- = GRAVEL
- = EXISTING SPOT ELEVATION
- = EXISTING CONTOUR ELEVATION
- = SANITARY SEWER
- = STORM SEWER
- = WATER LINE
- = GAS LINE
- = UNDERGROUND TELEPHONE
- = UNDERGROUND TELEVISION
- = UNDERGROUND ELECTRIC
- = OVERHEAD WIRES
- = DECIDUOUS TREE
- = EVERGREEN TREE
- = SANITARY MANHOLE
- = DRAINAGE MANHOLE
- = ELECTRIC MANHOLE
- = TELEPHONE MANHOLE
- = CATCHBASIN
- = SANITARY CLEANOUT
- = FIRE HYDRANT
- = VALVE
- = UTILITY POLE
- = LIGHT POLE
- = GUY POLE
- = GUY WIRE
- = UTILITY PEDESTAL
- = TRANSFORMER
- = HANDHOLE
- = ELECTRIC METER
- = GAS METER
- = WATER METER
- = SOIL BORING
- = SIGN
- = POST
- = AIR CONDITIONING UNIT

PARCEL #: H-08-19-275-012

LEGAL DESCRIPTION
(Taken from Warranty Deed, L. 4260, P. 219)

Township of Scio, County of Washtenaw, and State of Michigan, described as follows, to wit:

Beginning at the Southeast Corner of Lot 8, COLE AND HUSS SUBDIVISION, as recorded in Liber 8 of Plats, Page 39, Washtenaw County Records; thence North 89 degrees 57 minutes 00 seconds West 220.44 feet along the South Line of said Lot 8 and the East-West 1/4 line of Section 19, Town 2 South, Range 5 East, Scio Township, Washtenaw County, Michigan; thence North 00 degrees 40 minutes 00 seconds West 951.64 feet; thence North 73 degrees 18 minutes 00 seconds East 242.93 feet along the Northerly line of Lots 9 through 12, inclusive, COLE AND HUSS SUBDIVISION, to the Northeast Corner of said Lot 12; thence South 16 degrees 42 minutes 00 seconds East 330.00 feet to the Southeast Corner of said Lot 12; thence South 73 degrees 18 minutes 00 seconds West 110.66 feet to the Northeast corner of said Lot 8, thence South 00 degrees 52 minutes 00 seconds East 673.72 feet along the East line of said Lot 8 to the Place of Beginning, being a part of Lots 7, 8, and 9 and all of Lots 10, 11 and 12, COLE AND HUSS SUBDIVISION, as recorded in Liber 8 of Plats Page 39, Washtenaw County Records.

Being more particularly described as:

BEGINNING at the SE Corner of Lot 8 of "Cole and Huss Subdivision", as recorded in Liber 8 of Plats, Page 39, Washtenaw County Records,

thence N 89°57'00" W 220.44 feet along the E-W 1/4 line of Section 19, T2S, R5E, Scio Township, Washtenaw County, Michigan and the South line of said Lot 8; thence N 00°40'00" W 951.64 feet; thence N 73°18'00" E 243.00 feet along the Northerly line of Lots 9-12 of said "Cole and Huss Subdivision"; thence S 16°42'00" E 330.00 feet along the Easterly line of Lot 12 of said "Cole and Huss Subdivision"; thence S 73°18'00" W 110.66 feet along the Southerly line of Lots 11 & 12 of said "Cole and Huss Subdivision"; thence S 00°50'39" E 673.79 feet along the East line of said Lot 8 to the POINT OF BEGINNING. Being a part Lots 7, 8, 9 and all of Lots 10, 11 & 12 of "Cole and Huss Subdivision" located in the NW 1/4 of said Section 19 and containing 5.43+/- acres of land, more or less. Being subject to the rights of the public over that portion of land, as occupied by Jackson Road (Variable Width). Being subject to easements and restrictions of record, if any.

Being subject to and together with a Reciprocal Easement Agreement as recorded in Liber 2446, Pages 398-400, Washtenaw County Records.

SITE DATA

EXISTING CONSTRUCTION YARD, PROPOSED OFFICE BUILDING AND SITE IMPROVEMENTS
TOTAL SITE AREA = 236,498 SF = 5.43 ACRES
ZONED I-1 (LIMITED INDUSTRIAL)
ADJ. ZONING: SEE PLAN

BUILDING SETBACKS
FRONT - 50 FEET
SIDES - 20 FEET
REAR - 35 FEET

BUILDING/UNIT DATA
PROPOSED OFFICE FLOOR AREA = 2,400 S.F.
BUILDING HEIGHT = 36 FT.
EX. BUILDING FLOOR AREA = 4,200 S.F.
COMBINED FLOOR AREA = 6,600 S.F.

LOT COVERAGE: (BLDG. AREA/LOT AREA):
= 6,600 S.F./236,498 S.F. = 2.79%
LOT COVERAGE MAX. = 20% (OK)

PARKING
REQUIRED:
OFFICE: 1 SPACE PER 300 S.F.
= 2,400 S.F./300
8 SPACES REQUIRED

TOTAL REQUIRED = 8 SPACES (INCL. 1 B/F)
TOTAL PROVIDED = 8 SPACES

UTILITIES
WATER:
PUBLIC WATER MAIN (WATER SERVICE)
SANITARY:
PUBLIC SANITARY (LEAD)
STORM:
ON-SITE DETENTION BASIN

NOTES
- LOCATE UTILITIES PRIOR TO INSTALLATION (COORDINATE W/ ENGINEER)
- ALL DELIVERIES SHALL BE TO EX. REAR BUILDING

SOILS BUILDING CONSTRAINTS NARATIVE

The USDA Web Soil Survey indicates the primary soil type on the site is Conover Loam. This soil type is categorized as being "somewhat limited" for small commercial buildings. The Soil Survey studies the A and B horizons of the soil which extend approximately three feet below the surface. The primary reason the US Department of Agriculture performed the soil survey and analyzed the soil characteristics was for the cultivation and production of agricultural crops and construction of shallow foundation farm buildings. The proposed office building will have a full depth foundation and basement extending seven feet below the proposed finish elevation and approximately six feet below the existing natural elevation of the building area. The building footings will have both inside and outside footing tiles draining to a sump pump crock. Any ground water collected by the tiles will be pumped to the surface and drained away from the exterior of the foundation providing protection from the damaging effects of ground water. Additionally the 16" wide footings will spread the bearing weight of the building over a broad area protecting the building from excessive settlement damage.

BASIS OF DESIGN (SANITARY/WATER)

THE EXISTING 4,200 S.F. POLE BARN WILL HOUSE THE E.T. MacKENZIE COMPANY MECHANIC'S GARAGE AND WILL PROVIDE INDOOR STORAGE FOR WEATHER PRONE CONSTRUCTION MATERIALS SUCH AS GRASS SEED, FERTILIZER AND TACIFIER. (1) MECHANIC WILL WORK FROM THE SHOP BUILDING. THE EXISTING RESTROOM WILL REMAIN IN SERVICE WITH VERY LIMITED USE. THIS EQUATES TO LESS THAN 4,200 S.F. OF GENERAL INDUSTRIAL SPACE CALCULATED AT 0.40 GPD/S.F. OR APPROXIMATELY 168 GPD. THIS CALCULATION IS EXTREMELY HIGH COMPARED TO THE ACTUAL USE THE BUILDING WILL CONTRIBUTE TO THE SEWAGE FLOW FROM THE SITE.

THE PROPOSED 2,400 S.F. OFFICE BUILDING WILL CONTAIN SEVEN OFFICE ROOMS, ONE KITCHEN, ONE CONFERENCE ROOM AND TWO FINISHED BATHROOMS. THIS EQUATES TO 2,400 S.F. OF NON-MEDICAL OFFICE SPACE CALCULATED AT 0.06 GPD SEWAGE FLOWS/S.F. OR APPROXIMATELY 144 GPD. 168 GPD + 144 GPD = 312 GPD.

THE ESTIMATED WATER AND SEWAGE USE GENERATED BY THE SITE WILL BE LESS THAN OR EQUAL TO 1 RESIDENTIAL EQUIVALENT USE PER THE ANN ARBOR "TABLE A" CHART, PROVIDED BY THE TOWNSHIP UTILITY DEPARTMENT.

(1) DENOTES NUMBER OF B/F SPACES
(VA) DENOTES VAN ACCESS B/F SPACES

SITE ADDRESS: 8197 JACKSON RD., ANN ARBOR, MICHIGAN
PARCEL ID#: H-08-19-275-012

SURVEY BY OTHERS

STATE OF MICHIGAN
GREGORY A. PETRU
ENGINEER NO. 50958
LICENSED PROFESSIONAL ENGINEER

REVISIONS
2-8-19 OWNER REVIEW
2-26-19 SITE PLAN SUBMITTAL
3-25-19 SITE PLAN SUBMITTAL
4-15-19 SITE PLAN SUBMITTAL
7-18-19 SITE PLAN REVISIONS
9-4-19 SITE PLAN REVISIONS
9-16-19 SITE PLAN REVISIONS
10-24-19 SITE PLAN REVISIONS

KEBS, INC. KYES ENGINEERING BRYAN LAND SURVEYS
2116 HASLETT ROAD, HASLETT, MI 48840
PH. 517-339-1014 FAX. 517-339-8047
Marshall Office
Ph. 269-781-9800

8197 Jackson Road
SITE & UTILITY PLAN

SCALE: 1"= 40'	DESIGNER: GAP	APPROVED BY: JWK
DATE: 1-28-19	PROJECT MGR. JWK	SHEET 2 OF 8
AUTHORIZED BY: E.T. MACKENZIE COMPANY		JOB #: 94729

8197 Jackson Road

SCIO TOWNSHIP, WASHTENAW COUNTY, MICHIGAN

STORMWATER MANAGEMENT – SUMMARY

THE SUBJECT SITE SURFACE DRAINS FROM THE NORTHEAST CORNER TO ITS SOUTHWEST CORNER AND IS COLLECTED IN A SWALE ALONG THE WESTERN SIDE OF THE PROPERTY WHICH ALSO DRAINS 1/2 OF THE PRIVATE SHARED DRIVEWAY. THE EXISTING GRAVEL PARKING AND STORAGE AREA AND EXISTING BUILDING DRAIN IN THE EXACT SAME MANNER. STORMWATER LEAVES THE SITE AT THE SOUTHWEST CORNER OF THE PROPERTY AT ITS LOWEST POINT, AND CONTINUES TO DRAIN TO THE SOUTHWEST INTO A PRIVATE DRAINAGE DITCH ON THE ADJOINING PRIVATE PROPERTY. AT SOME POINT IN TIME A FARM LANE WAS BUILT JUST SOUTH OF THIS SITE'S SOUTH PROPERTY LINE, AND A 24" CONCRETE CULVERT WAS INSTALLED TO CARRY THE EXISTING AND NATURAL STORMWATER FLOW FROM THE SUBJECT SITE AND OTHER PROPERTIES NORTH OF THE FARM LANE. THIS IS THE ONLY AND NATURAL OUTLET FOR STORMWATER DRAINING FROM LANDS NORTH OF THE FARM LANE.

THE PROPOSED NEW DEVELOPMENT OF A 2,400 S.F. OFFICE BUILDING AND ASSOCIATED 8,356 S.F. DRIVEWAY/SIDEWALK/PARKING LOT IN THE NORTHERN QUARTER OF THE SITE DRAINS TO LAWN AREAAS ON EITHER SIDE OF THE PARKING AND THEN WESTWARD TO THE SHARED DRIVEWAY SWALE. CHECK DAMS IN THE SWALE WILL HELP SLOW RUNOFF AND ENCOURAGE WATER TO INFILTRATE INTO THE GROUND PRIOR TO DISCHARGING TO THE DETENTION BASIN. THE DETENTION BASIN WILL PROVIDE A CAPACITY OF 85,808 CUBIC FEET OF STORAGE. IN ADDITION, A NEW OUTLET CONTROL STRUCTURE IS PROPOSED TO CONTROL RUNOFF TO THE EXISTING 24" CULVERT AND DRAINAGE DITCH.

NOTE: ALL GRADES SHOWN ARE FOR FINAL CONSTRUCTED CONDITIONS AND CONTRACTOR IS RESPONSIBLE FOR HOLDING DOWN GRADES AS THEY OR THE DEVELOPER DEEMS NECESSARY FOR BASEMENT SPOILS, TOPSOILS ETC...



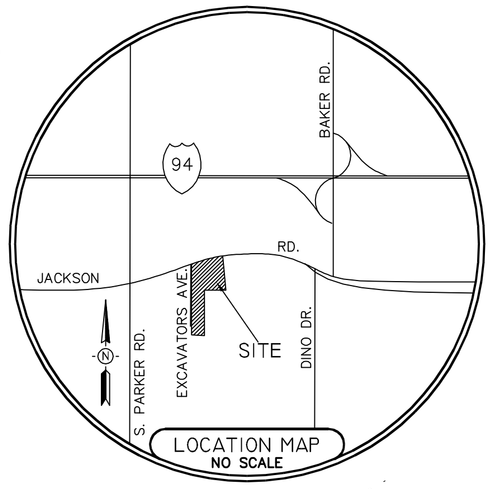

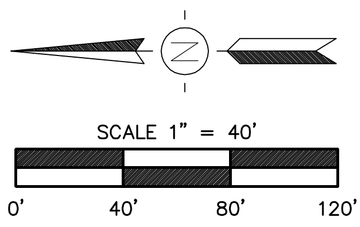

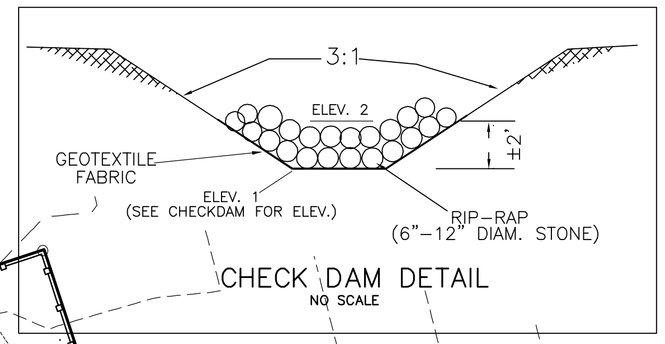

CHECK DAM DETAIL
NO SCALE

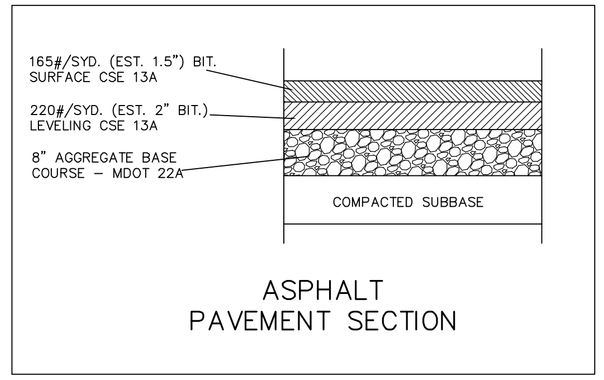

ASPHALT
PAVEMENT SECTION

INFILTRATION NOTES:
TEST PITS WERE DUG AND EVALUATED BY G2 CONSULTING GROUP TO DETERMINE EXISTING INFILTRATION CAPABILITY. HOWEVER, DUE TO COHESIVE SOILS AND A HIGH WATER TABLE, IT WAS DETERMINED THAT INFILTRATION WOULD NOT BE FEASIBLE.

LEGEND

- ITP — INFILTRATION TEST PIT
- PROPOSED WATER MAIN
- PROPOSED SANITARY SEWER
- PROPOSED STORM SEWER
- PROPOSED HYDRANT
- PROPOSED GATE VALVE
- PROPOSED SAN. M.H.
- PROPOSED STORM M.H.
- PROPOSED C.B.
- 800 — PROPOSED GRADES
- F-F 800.00 — PROPOSED FIRST FLOOR ELEV.
- ▲T/C 800.00 — PROPOSED TOP OF CURB ELEV.
- ▲T/G 800.00 — PROPOSED TOP OF GROUND ELEV.
- ▲T/P 800.00 — PROPOSED TOP OF PAVT ELEV.
- ▲T/W 800.00 — PROPOSED TOP OF WALK ELEV.

EX. LEGEND

- = SET 1/2" BAR WITH CAP
- = FOUND IRON AS NOTED
- = DEED LINE
- = DISTANCE NOT TO SCALE
- = FENCE
- = ASPHALT
- = CONCRETE
- = GRAVEL
- 860 = EXISTING SPOT ELEVATION
- 860 = EXISTING CONTOUR ELEVATION
- = SANITARY SEWER
- = STORM SEWER
- = WATER LINE
- G = GAS LINE
- TU = UNDERGROUND TELEPHONE
- C = UNDERGROUND TELEVISION
- EU = UNDERGROUND ELECTRIC
- EO = OVERHEAD WIRES
- = DECIDUOUS TREE
- = EVERGREEN TREE
- = SANITARY MANHOLE
- = DRAINAGE MANHOLE
- = ELECTRIC MANHOLE
- = TELEPHONE MANHOLE
- = CATCHBASIN
- = SANITARY CLEANOUT
- = FIRE HYDRANT
- = VALVE
- = UTILITY POLE
- = LIGHT POLE
- = GUY POLE
- = GUY WIRE
- = TRANSFORMER
- = HANDHOLE
- = ELECTRIC METER
- = GAS METER
- = WATER METER
- = SOIL BORING
- = SIGN
- = POST
- = AIR CONDITIONING UNIT

DETENTION OUTLET #1 DETAIL
NO SCALE

STABILIZED EMERGENCY OVERFLOW SPILLWAY

DETAIL FOR RODENT GUARD ON END SECTION
NO SCALE

INTEGRAL SIDEWALK AND CURB DETAIL
NO SCALE

SITE ADDRESS: 8197 JACKSON RD., ANN ARBOR, MICHIGAN
PARCEL ID#: H-08-19-275-012

SURVEY BY OTHERS

STATE OF MICHIGAN
GREGORY A. PETRU
ENGINEER
NO. 50958
LICENSED PROFESSIONAL ENGINEER

REVISIONS
2-8-19 OWNER REVIEW
2-26-19 SITE PLAN SUBMITTAL
3-25-19 SITE PLAN SUBMITTAL
4-15-19 SITE PLAN SUBMITTAL
7-18-19 SITE PLAN REVISIONS
9-4-19 SITE PLAN REVISIONS
9-16-19 SITE PLAN REVISIONS
10-24-19 SITE PLAN REVISIONS

KEBS, INC. KYES ENGINEERING BRYAN LAND SURVEYS
2116 HASLETT ROAD, HASLETT, MI 48840
PH. 517-339-1014 FAX. 517-339-8047
Marshall Office
Ph. 269-781-9800

8197 Jackson Road
STORM & GRADING PLAN

SCALE: 1"= 40'	DESIGNER: CAP	APPROVED BY: JWK
DATE: 1-28-19	PROJECT MGR. JWK	SHEET 3 OF 8
AUTHORIZED BY: E.T. MACKENZIE COMPANY		JOB #: 94729

8197 Jackson Road

SCIO TOWNSHIP, WASHTENAW COUNTY, MICHIGAN

TOTAL ACRES = 5.43 ACRES

AREA DISTURBED = 2.97 ACRES

SILT FENCE (TYP.)

LIMITS OF EARTH DISTURBANCE (TYP.)

DENOTES EXISTING DRAINAGE FLOW

DENOTES PROPOSED DRAINAGE FLOW

SOIL TYPE:
CoB: Conover Loam, 0–4% Slopes. KrB: Kidder Sandy Loam, 2–6% Slopes. KrC: Kidder Sandy Loam, 6–12% Slopes

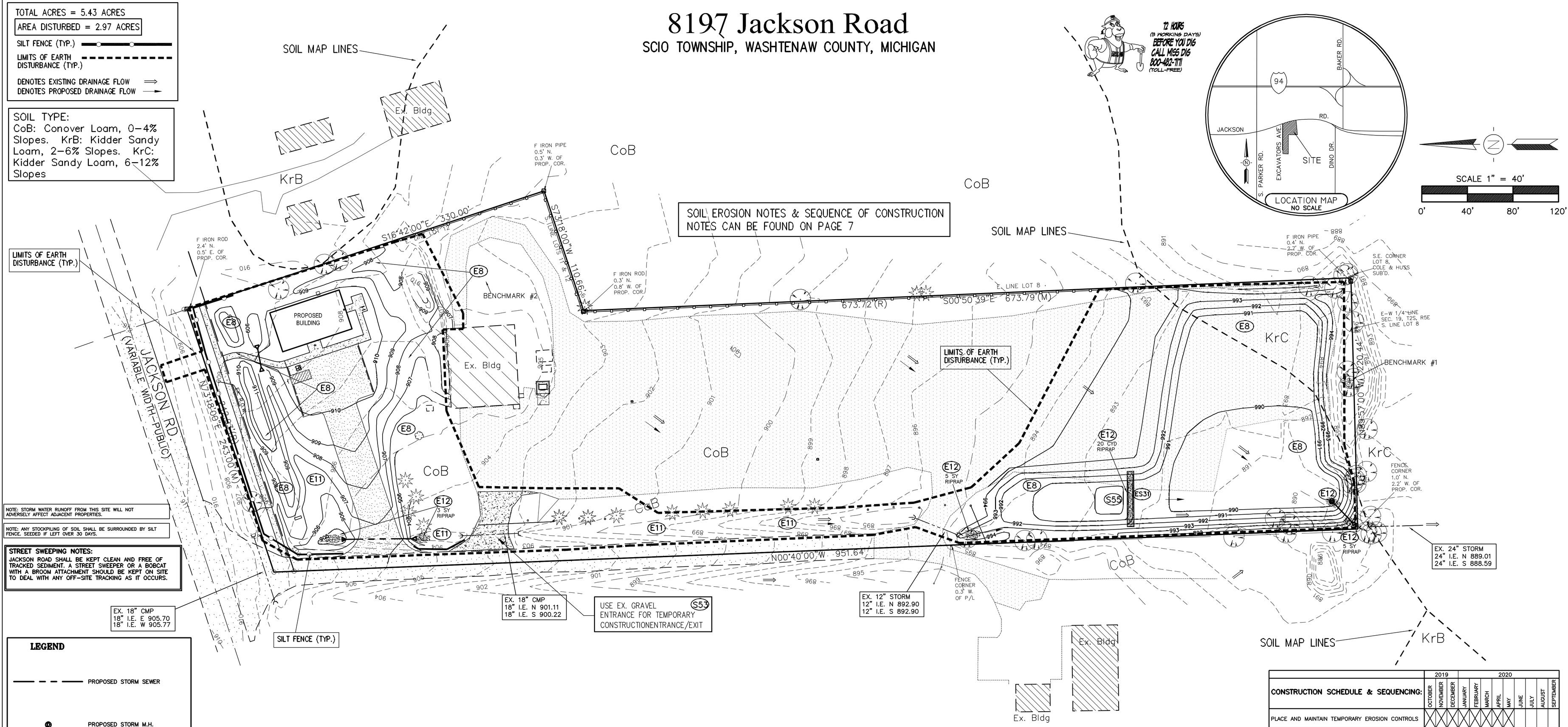

NOTE: STORM WATER RUNOFF FROM THIS SITE WILL NOT ADVERSELY AFFECT ADJACENT PROPERTIES.

NOTE: ANY STOCKPILING OF SOIL SHALL BE SURROUNDED BY SILT FENCE. SEEDED IF LEFT OVER 30 DAYS.

STREET SWEEPING NOTES:
JACKSON ROAD SHALL BE KEPT CLEAN AND FREE OF TRACKED SEDIMENT. A STREET SWEEPER OR A BOBCAT WITH A BROOM ATTACHMENT SHOULD BE KEPT ON SITE TO DEAL WITH ANY OFF-SITE TRACKING AS IT OCCURS.

LEGEND

- PROPOSED STORM SEWER
- PROPOSED STORM M.H.
- PROPOSED C.B.
- 800 PROPOSED GRADES

EX. LEGEND

= SET 1/2" BAR WITH CAP	= SANITARY MANHOLE
= FOUND IRON AS NOTED	= DRAINAGE MANHOLE
= DEED LINE	= ELECTRIC MANHOLE
= DISTANCE NOT TO SCALE	= TELEPHONE MANHOLE
= FENCE	= CATCHBASIN
= ASPHALT	= SANITARY CLEANOUT
= CONCRETE	= FIRE HYDRANT
= GRAVEL	= VALVE
= EXISTING SPOT ELEVATION	= UTILITY POLE
880 = EXISTING CONTOUR ELEVATION	= LIGHT POLE
= SANITARY SEWER	= GUY POLE
= STORM SEWER	= GUY WIRE
= WATER LINE	= UTILITY PEDESTAL
G = GAS LINE	= TRANSFORMER
TU = UNDERGROUND TELEPHONE	= HANDHOLE
C = UNDERGROUND TELEVISION	= ELECTRIC METER
EU = UNDERGROUND ELECTRIC	= GAS METER
EO = OVERHEAD WIRES	= WATER METER
= DECIDUOUS TREE	= SOIL BORING
	= SIGN
	= POST
= EVERGREEN TREE	= AIR CONDITIONING UNIT
DENOTES S.E.S.C. KEYING SYSTEM	

LEGAL DESCRIPTION
(Taken from Warranty Deed, L. 4260, P. 219)

Township of Scio, County of Washtenaw, and State of Michigan, described as follows, to wit:

Beginning at the Southeast Corner of Lot 8, COLE AND HUSS SUBDIVISION, as recorded in Liber 8 of Plats, Page 39, Washtenaw County Records; thence North 89 degrees 57 minutes 00 seconds West 220.44 feet along the South Line of said Lot 8 and the East–West 1/4 line of Section 19, Town 2 South, Range 5 East, Scio Township, Washtenaw County, Michigan; thence North 00 degrees 40 minutes 00 seconds West 951.64 feet; thence North 73 degrees 18 minutes 00 seconds East 242.93 feet along the Northerly line of Lots 9 through 12, inclusive, COLE AND HUSS SUBDIVISION, to the Northeast Corner of said Lot 12; thence South 16 degrees 42 minutes 00 seconds East 330.00 feet to the Southeast Corner of said Lot 12; thence South 73 degrees 18 minutes 00 seconds West 110.66 feet to the Northeast corner of said Lot 8, thence South 00 degrees 52 minutes 00 seconds East 673.72 feet along the East line of said Lot 8 to the Place of Beginning, being a part of Lots 7, 8, and 9 and all of Lots 10, 11 and 12, COLE AND HUSS SUBDIVISION, as recorded in Liber 8 of Plats Page 39, Washtenaw County Records.

Being more particularly described as:

BEGINNING at the SE Corner of Lot 8 of "Cole and Huss Subdivision", as recorded in Liber 8 of Plats, Page 39, Washtenaw County Records,

thence N 89°57'00" W 220.44 feet along the E–W 1/4 line of Section 19, T2S, R5E, Scio Township, Washtenaw County, Michigan and the South line of said Lot 8; thence N 00°40'00" W 951.64 feet; thence N 73°18'00" E 243.00 feet along the Northerly line of Lots 9–12 of said "Cole and Huss Subdivision"; thence S 16°42'00" E 330.00 feet along the Easterly line of Lot 12 of said "Cole and Huss Subdivision"; thence S 73°18'00" W 110.66 feet along the Southerly line of Lots 11 & 12 of said "Cole and Huss Subdivision"; thence S 00°50'39" E 673.79 feet along the East line of said Lot 8 to the POINT OF BEGINNING. Being a part Lots 7, 8, 9 and all of Lots 10, 11 & 12 of "Cole and Huss Subdivision" located in the NW 1/4 of said Section 19 and containing 5.43+/– acres of land, more or less. Being subject to the rights of the public over that portion of land, as occupied by Jackson Road (Variable Width). Being subject to easements and restrictions of record, if

Being subject to and together with a Reciprocal Easement Agreement as recorded in Liber 2446, Pages 398–400, Washtenaw County Records.

MICHIGAN DEPARTMENT OF MANAGEMENT AND BUDGET

S-E-S-C KEYING SYSTEM

KEY	BEST MANAGEMENT PRACTICES	SYMBOL	WHERE USED
E8	PERMANENT SEEDING		Stabilization method utilized on sites where earth change has been completed (final grading attained).
E11	VEGETATED CHANNELS		For use in created stormwater channels. Vegetation is used to slow water velocity and reduce erosion within the channel.
E12	RIPRAP		Use along shorelines, waterways, or where concentrated flows occur. Slows velocity, reduces sediment load, and reduces erosion.
ES31	CHECK DAM		Used to reduce surface flow velocities within constructed and existing flow corridors.
S51	SILT FENCE		Use adjacent to critical areas, to prevent sediment laden sheet flow from entering these areas.
S53	STABILIZED CONSTRUCTION ACCESS		Used at every point where construction traffic enters or leaves a construction site.
S55	SEDIMENT BASIN		At the outlet of disturbed areas and at the location of a permanent detention basin.

CONSTRUCTION SCHEDULE & SEQUENCING:	2019 OCTOBER	NOVEMBER	DECEMBER	2020 JANUARY	FEBRUARY	MARCH	APRIL	MAY	JUNE	JULY	AUGUST	SEPTEMBER
PLACE AND MAINTAIN TEMPORARY EROSION CONTROLS	X	X	X	X	X	X	X	X				
TOPSOIL STRIPPING & STOCKPILING	X	X										
ON–SITE UTILITIES CONSTRUCTION		X	X	X								
SITE GRADING & EARTHWORK		X	X	X	X	X	X	X				
BUILDING/DRIVEWAY CONSTRUCTION		X	X	X	X	X	X	X	X			
TOPSOIL SPREADING		X	X				X	X				
PERMANENT SEEDING		X	X				X	X				
FINAL INSPECTIONS & REMOVE TEMPORARY EROSION CONTROLS							X	X				

SITE ADDRESS: 8197 JACKSON RD., ANN ARBOR, MICHIGAN
PARCEL ID#: H-08-19-275-012

SURVEY# BY OTHERS

STATE OF MICHIGAN · GREGORY A. PETRU · ENGINEER NO. 50958 · LICENSED PROFESSIONAL ENGINEER

REVISIONS
2-8-19 OWNER REVIEW
2-26-19 SITE PLAN SUBMITTAL
3-25-19 SITE PLAN SUBMITTAL
4-15-19 SITE PLAN SUBMITTAL
7-18-19 SITE PLAN REVISIONS
9-4-19 SITE PLAN REVISIONS
9-16-19 SITE PLAN REVISIONS
10-24-19 SITE PLAN REVISIONS

KEBS, INC. KYES ENGINEERING BRYAN LAND SURVEYS
2116 HASLETT ROAD, HASLETT, MI 48840
PH. 517-339-1014 FAX. 517-339-8047
Marshall Office
Ph. 269-781-9800

8197 Jackson Road
SOIL EROSION CONTROL PLAN

SCALE: 1"= 40'	DESIGNER: CAP	APPROVED BY: JWK
DATE: 1-28-19	PROJECT MGR. JWK	SHEET 4 OF 8
AUTHORIZED BY: E.T. MACKENZIE COMPANY		JOB #: 94729

8197 Jackson Road

SCIO TOWNSHIP, WASHTENAW COUNTY, MICHIGAN

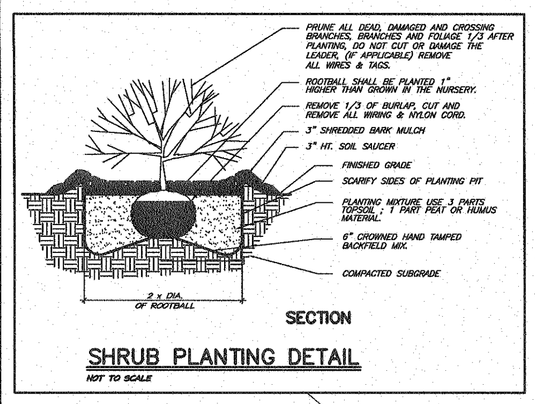

SHRUB PLANTING DETAIL

NOT TO SCALE



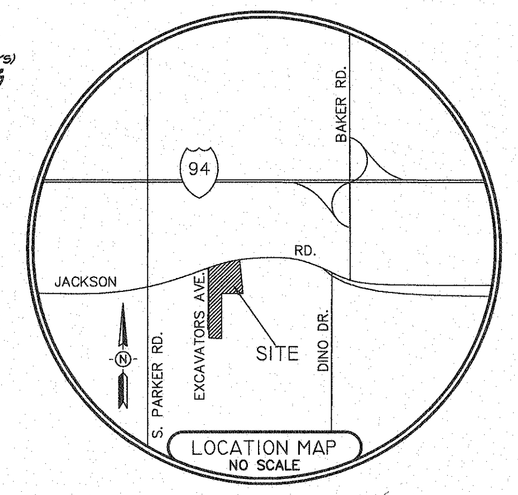

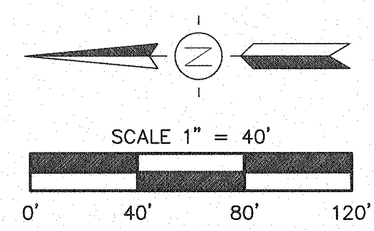

LIGHTING NOTES:

1. ALL LIGHT POLES SHALL BE A MAXIMUM OF 20' HIGH.
2. ALL FIXTURES SHALL BE FACING DOWNWARD AND SHIELDED AS NECESSARY TO KEEP ALL LIGHT WITHIN THE PROPERTY LIMITS.
3. LIGHT FIXTURE CUT SHEETS CAN BE LOCATED ON THE DETAIL PAGE.

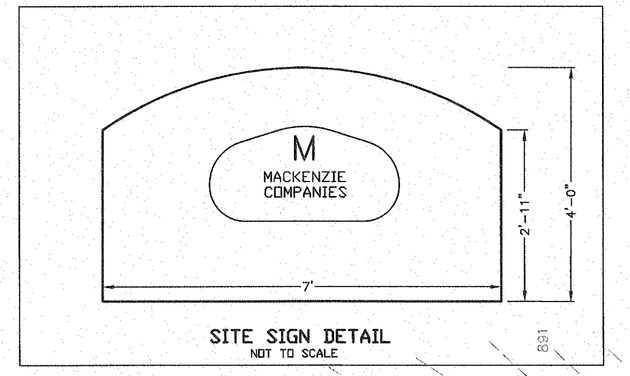

SITE SIGN DETAIL

NOT TO SCALE

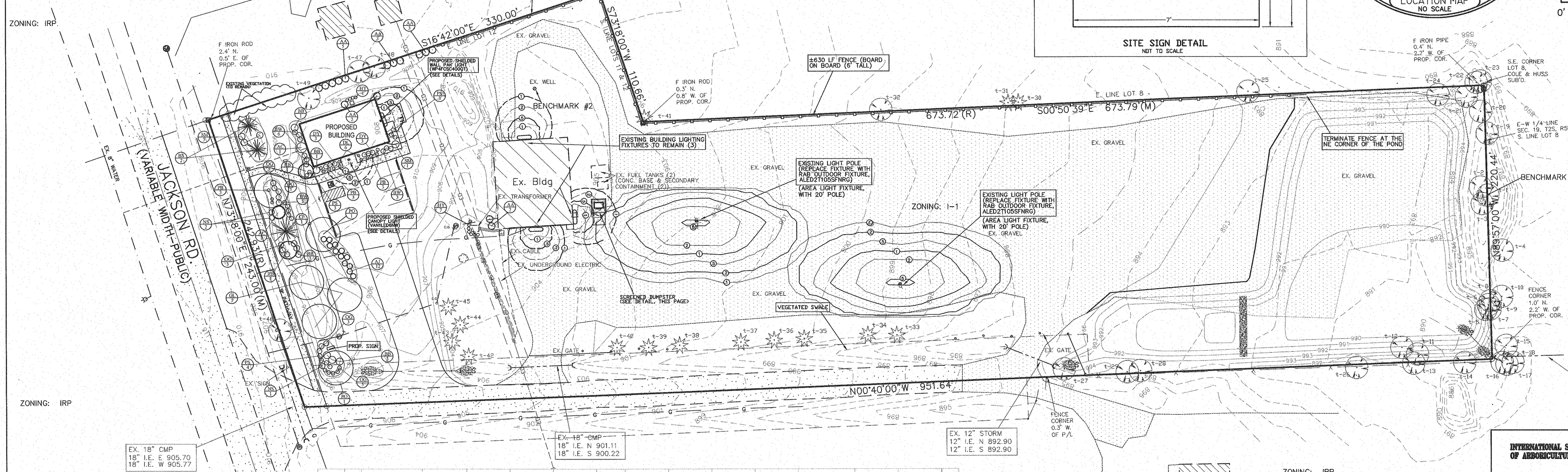

LEGEND

- PROPOSED WATER MAIN
- PROPOSED SANITARY SEWER
- PROPOSED STORM SEWER
- PROPOSED HYDRANT
- PROPOSED GATE VALVE
- PROPOSED SAN. M.H.
- PROPOSED STORM M.H.
- PROPOSED C.B.
- 800 PROPOSED GRADES

EX. LEGEND

= SET 1/2" BAR WITH CAP	= SANITARY MANHOLE
= FOUND IRON AS NOTED	= DRAINAGE MANHOLE
= DEED LINE	= ELECTRIC MANHOLE
= DISTANCE NOT TO SCALE	= TELEPHONE MANHOLE
= FENCE	= CATCHBASIN
= ASPHALT	= SANITARY CLEANOUT
= CONCRETE	= FIRE HYDRANT
= GRAVEL	= VALVE
880 = EXISTING SPOT ELEVATION	= UTILITY POLE
880 = EXISTING CONTOUR ELEVATION	= LIGHT POLE
= SANITARY SEWER	= GUY POLE
= STORM SEWER	= GUY WIRE
= WATER LINE	= UTILITY PEDESTAL
G = GAS LINE	= TRANSFORMER
TU = UNDERGROUND TELEPHONE	= HANDHOLE
C = UNDERGROUND TELEVISION	= ELECTRIC METER
EU = UNDERGROUND ELECTRIC	= GAS METER
ED = OVERHEAD WIRES	= WATER METER
= DECIDUOUS TREE	= SOIL BORING
	= SIGN
	= POST
= EVERGREEN TREE	= AIR CONDITIONING UNIT

Plant List

Key	Quantity	Common Name	Botanical Name	Size	Remarks
Trees					
PO	3	Pin Oak	Quercus palustris	2.5" Cal	B&B
GL	3	Greenspire Littleleaf Linden	Tilia cordata "Greenspire"	2.5" Cal	B&B
RB	2	Red Bud	Cercis canadensis	8' - 10'	Clump form
BS	2	Colorado Blue Spruce	Picea pungens "Glauca"	6' - 7'	B&B
CF	1	Concolor White Fir	Abies concolor	6' - 7'	B&B
SM	4	Royal Star Magnolia	Magnolia stellata "Royal Star"	4'-5'	B&B
AA	15	Mission Arborvitae	Thuja occidentalis "Techny"	5'-6'	Potted
Shrubs					
BB	8	Dwarf Burning Bush	Euonymus alatus "Compacta"	30"-36"	B&B
AC	2	Compact American Cranberrybush	Viburnum trilobum "Compactum"	30"-36"	B&B
OG	16	Old Gold Juniper	Junipeus chinensis "Old Gold"	5 Gal	Potted
AJ	12	Andorra Youngstown Juniper	Juniperus horizontalis "Youngstown"	5 Gal	Potted
DY	6	Dark Green Spreading Yew	Taxus x media "Nigra"	5 Gal	Potted
HY	11	Hicks Yew	Taxus x media "Hicksi"	5 Gal	Potted
NS	3	Bird's Nest Spruce	Picea abies "Nidiformis"	5 Gal	Potted
BW	14	Winter Gem Boxwood	Buxus media "Winter Gem"	3 Gal	Potted
PS	10	Little Princess Spirea	Spirea japonica "Little Princess"	3 Gal	Potted
PB	9	Crimson Pygmy Barberry	Berberis thunbergi "Crimson Pygmy"	3 Gal	Potted
Perennials					
DL	6	Tiger Daylilly	Hemerocallis "Stella d'orno"	1 Gal	Potted

Ordinance Compliance Calculations for Landscaping

Greenbelt Planting -	Jackson Road frontage = 243'. Req. # trees is 243 ÷ 30 = 8.1 or 8 trees. 1 Existing trees will be saved. 8 trees are provide
	Req. # of shrubs is 243 ÷ 30= 8, 8 x 6 = 48 shrubs. 48 shrubs are provided.
Parking Lot Perimeter -	30' of parking lot visible from street. Req. # trees is 30 ÷ 30' = 1 1 tree is proposed adjacent to the parking area.
	Req. # of shrubs is 30 ÷ 30 x 6 = 6 shrubs. 12 Shrubs are provided. Greenbelt berming also screens parking area.
Parking Lot Interior-	1 tree is required for every 8 parking spaces. A second tree is provided adjacent to the parking area.
Foundation Plantings -	Building has 100' of foundation requiring landscaping. Req. trees is 100' ÷ 30 = 3.33 or 3. 3 ornamental trees are provided.
	Req. # of shrubs is 100' ÷ 30 x 6 = 18. 31 Shrubs are provided.
General Site Landscaping -	45.9% of the site area remains as pervious open grass or landscaping areas. 29 trees currently exist on the site with a total DBH of 409 inches, 1 trees is proposed to be removed totaling 16 DBH. 96% of Existing DBH shall remain after new construction. Additional new landscaping is proposed to soften the appearance of the existing Mechanic's Shop and the eastern side of the proposed office.

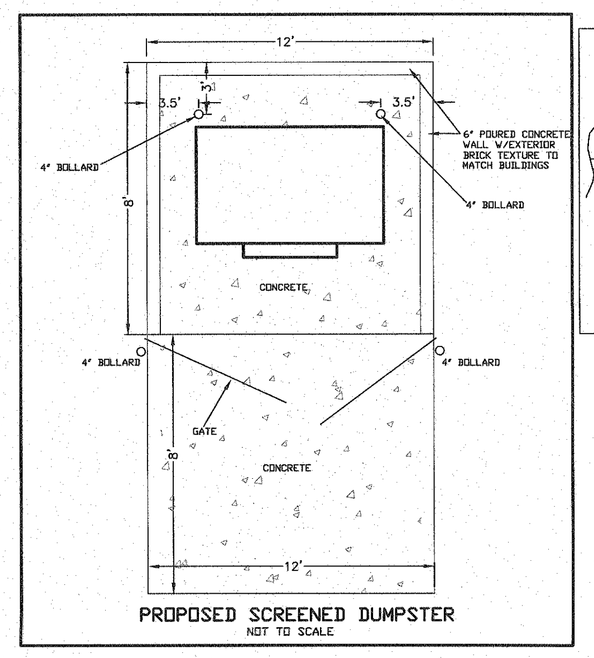

PROPOSED SCREENED DUMPSTER

NOT TO SCALE

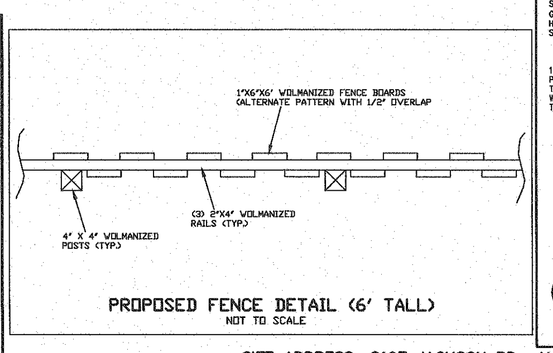

PROPOSED FENCE DETAIL (6' TALL)

NOT TO SCALE

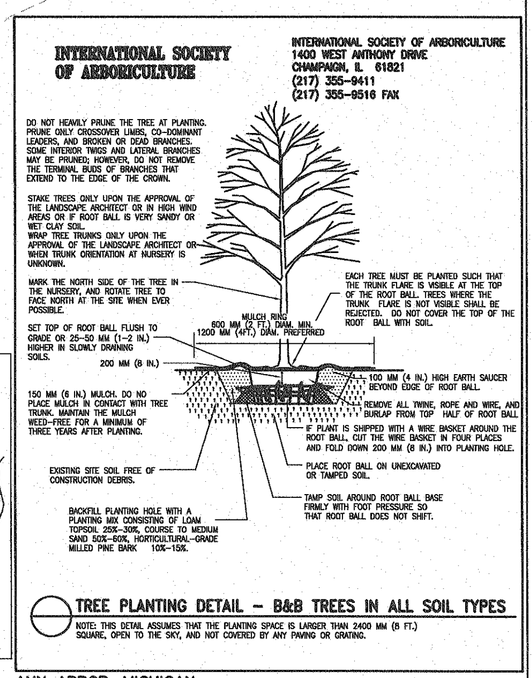

TREE PLANTING DETAIL - B&B TREES IN ALL SOIL TYPES

NOTE: THIS DETAIL ASSUMES THAT THE PLANTING SPACE IS LARGER THAN 2400 MM (8 FT.) SQUARE, OPEN TO THE SKY, AND NOT COVERED BY ANY PAVING OR GRADING.

SITE ADDRESS: 8197 JACKSON RD., ANN ARBOR, MICHIGAN

PARCEL ID#: H-08-19-275-012

SURVEY# BY OTHERS

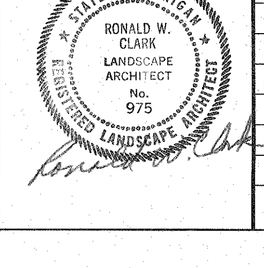

REVISIONS
2-8-19 OWNER REVIEW
2-26-19 SITE PLAN SUBMITTAL
3-25-19 SITE PLAN SUBMITTAL
4-15-19 SITE PLAN SUBMITTAL
7-18-19 SITE PLAN REVISIONS
9-4-19 SITE PLAN REVISIONS
9-16-19 SITE PLAN REVISIONS
10-24-19 SITE PLAN REVISIONS

KEBS, INC. KYES ENGINEERING BRYAN LAND SURVEYS
2116 HASLETT ROAD, HASLETT, MI 48840
PH. 517-339-1014 FAX. 517-339-8047
Marshall Office
Ph. 269-781-9800

8197 Jackson Road

LANDSCAPE & LIGHTING PLAN

SCALE: 1"= 40'	DESIGNER: CAP	APPROVED BY: JWK
DATE: 1-28-19	PROJECT MGR. JWK	SHEET 5 OF 8
AUTHORIZED BY: E.T. MACKENZIE COMPANY		JOB #: 94729

8197 Jackson Road

SCIO TOWNSHIP, WASHTENAW COUNTY, MICHIGAN

APPLICANT/OWNER::
E.T. MACKENZIE COMPANY
4248 W. SAGINAW HWY.
GRAND LEDGE, MI. 48837
PH: (517) 627-8408
FAX: (517) 627-4470

ENGINEER/SURVEYOR:
KEBS, Inc.
2116 HASLETT RD.
HASLETT, MI. 48840
PH: (517) 339-1014
FAX: (517) 339-8047

EXISTING SANITARY SEWER INVENTORY:

SANITARY MANHOLE #1 T/CAS 906.80 (4' CONCRETE STRUCTURE) 6" N. I.E. 897.20 6" S. I.E. 897.30	SANITARY MANHOLE #3 T/CAS 907.82 (4' CONCRETE STRUCTURE) 8" E. I.E. 894.37 (VCP) 8" W. I.E. 894.47 (VCP)
SANITARY MANHOLE #2 T/CAS 906.33 (2' VCP STRUCTURE) 4" NW. I.E. 901.23 4" SE. I.E. 901.23	SANITARY MANHOLE #4 T/CAS 910.96 (4' CONCRETE STRUCTURE) 8" E. I.E. 893.71 (VCP) 8" W. I.E. 893.81 (VCP)

BENCHMARKS:

VERTICAL DATUM: NAVD 88
BENCHMARK #1: 899.54
60 D NAIL IN THE NORTH SIDE
OF 45" WHITE OAK.

VERTICAL DATUM: NAVD 88
BENCHMARK #2: 906.88
TOP OF WELL CASING

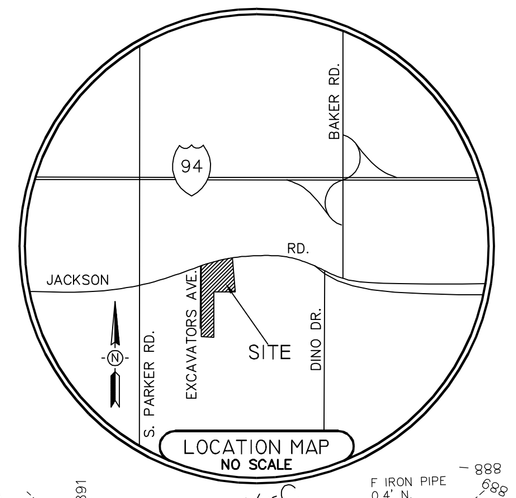

SCALE 1" = 40'
0' 40' 80' 120'

ZONING: IRP
H-08-19-200-000
EX. LAND USE: OFFICE
COMMERCIAL PROPERTIES INVESTORS
8178 JACKSON ROAD
ANN ARBOR, MI. 48103

ZONING: A-1
H-08-19-275-011
EX. LAND USE: RESIDENTIAL
LANKTON, SCOTT M.
8171 JACKSON ROAD
ANN ARBOR, MI. 48103

ZONING: A-1
H-08-19-275-011
EX. LAND USE: GRASSLAND & SHRUB/VACANT
LANKTON, SCOTT M.
8171 JACKSON ROAD
ANN ARBOR, MI. 48103

ZONING: IRP
H-08-19-200-022
EX. LAND USE: AGRICULTURE
SMITH, MURRAY J.A.
10250 M-52
MANCHESTER, MI. 48158

ZONING: IRP
H-08-19-275-020
EX. LAND USE: AGRICULTURE
GARY WRIGLEY & JEFFREY BALAKA
6544 JACKSON ROAD
ANN ARBOR, MI. 48103

ZONING: IRP
EX. LAND USE INDUSTRIAL
H-08-19-275-021
KRZYZANIAK, DAVID & SUE
7051 STILES DR.
ANN ARBOR, MI. 48103

ZONING: A-1
EX. LAND USE AGRICULTURE
H-08-19-001
NGA MOBILITY, LLC
ZHENG-DONG MA
4992 S. RIDGESIDE CR.
ANN ARBOR, MI. 48103

S16°42'00"E 330.00'
S73°18'00"W 110.66'
673.72'(R) S00°50'39"E 673.79'(M)
N73°18'00"E 262.93'(R) 245.00'(M)
N89°57'00"W 220.44'
N00°40'00"W 951.64'

BENCHMARK #1
BENCHMARK #2
(REMOVE)
Ex. Bldg
EX. WELL
EX. FUEL TANKS
EX. TRANSFORMER
EX. CABLE
EX. UNDERGROUND ELECTRIC
EX. GRAVEL
EX. ASPHALT
EX. SIGN
EX. 6" WATER
JACKSON RD. RIGHT-OF-WAY PER LIBER 223,
JACKSON RD. (VARIABLE WIDTH-PUBLIC)
SOIL BOUNDARY
F IRON PIPE 0.5' N. 0.3' W. OF PROP. COR.
F IRON ROD 2.4' N. 0.5' E. OF PROP. COR.
F IRON ROD 0.3' N. 0.8' W. OF PROP. COR.
F IRON PIPE 0.4' N. 2.7' W. OF PROP. COR.
S.E. CORNER LOT 8, COLE & HUSS SUB'D.
E-W 1/4 LINE SEC. 19, T2S, R5E
S. LINE LOT 8
E. LINE LOT 12
S. LINE LOTS 11 & 12
E. LINE LOT 8
EX. SA#4
EX. SA#2 T/CAS 906.33
EX. SA#1 (MONITORING MH) T/CAS 906.80
EX. SA#3
FENCE CORNER 1.0' N. 2.2' W. OF PROP. COR.
FENCE CORNER 0.3' W. OF P/L
EX. 18" CMP 18" I.E. E 905.70 18" I.E. W 905.77
EX. 18" CMP 18" I.E. N 901.11 18" I.E. S 900.22
EX. 12" STORM 12" I.E. N 892.90 12" I.E. S 892.90
EX. 27" STORM 27" I.E. N 889.01 27" I.E. S 888.59
66' WIDE RECIPROCAL EASEMENT AGREEMENT LIBER 2446, PGS. 398-400
Ex. Bldg
CoB
KrB
KrC



EX. LEGEND

- = SET 1/2" BAR WITH CAP
- = FOUND IRON AS NOTED
- = DEED LINE
- = DISTANCE NOT TO SCALE
- = FENCE
- = ASPHALT
- = CONCRETE
- = GRAVEL
- = EXISTING SPOT ELEVATION
- = EXISTING CONTOUR ELEVATION
- = SANITARY SEWER
- = STORM SEWER
- = WATER LINE
- = GAS LINE
- = UNDERGROUND TELEPHONE
- = UNDERGROUND TELEVISION
- = UNDERGROUND ELECTRIC
- = OVERHEAD WIRES
- = DECIDUOUS TREE (DENOTES S.E.S.C. KEYING SYSTEM)
- = EVERGREEN TREE
- = SANITARY MANHOLE
- = DRAINAGE MANHOLE
- = ELECTRIC MANHOLE
- = TELEPHONE MANHOLE
- = CATCHBASIN
- = SANITARY CLEANOUT
- = FIRE HYDRANT
- = VALVE
- = UTILITY POLE
- = LIGHT POLE
- = GUY POLE
- = GUY WIRE
- = UTILITY PEDESTAL
- = TRANSFORMER
- = HANDHOLE
- = ELECTRIC METER
- = GAS METER
- = WATER METER
- = SOIL BORING
- = SIGN
- = POST
- = AIR CONDITIONING UNIT

TREE TABLE

Tree #	DBH inches	Common Name	Scientific Name	Location/Protection Status	
t-1		45" white oak	Quercus alba	off site	
t-2	8	cherry-poor health	Prunus cerasus	protected	
t-3		cherry-dead	Prunus cerasus	dead - not protected	
t-4		10" cottonwood	Populus sect Aigeiros	off site	
t-5	16	twin 8" green ash	Fraxinus pennsylvanica	protected	
t-6	9	green ash	Fraxinus pennsylvanica	protected	
t-7	6	green ash	Fraxinus pennsylvanica	protected	
t-8	8	green ash	Fraxinus pennsylvanica	protected	
t-9		8" twin green ash	Fraxinus pennsylvanica	off site	
t-10		9" cottonwood	Populus sect Aigeiros	off site	
t-11	22	11" twin white oak	Quercus alba	protected	
t-12	15	elm	Ulmus	protected	
t-13		7" whiteoak	Quercus alba	off site	
t-14		7" multi-trunk cherry	Prunus cerasus	off site	
t-15		14" whiteoak	Quercus alba	off site	
t-16		14" cottonwood	Populus sect Aigeiros	off site	
t-17		9" cottonwood	Populus sect Aigeiros	off site	
t-18		10" cottonwood	Populus sect Aigeiros	off site	
t-19		22" whiteoak	Quercus alba	off site	
t-20	6	maple	Acer	protected	
t-21	15	cherry	Prunus cerasus	protected	
t-22		7" cherry	Prunus cerasus	off site	
t-23		12" cherry	Prunus cerasus	off site	
t-24	7	cherry	Prunus cerasus	protected	
t-25		8" crabapple	Malus sylvestris	off site	
t-26		14" triple norway maple	Acer platanoides	off site	
t-27	20	twin 10" green ash	Fraxinus pennsylvanica	protected	
t-28		12" triple boxelder	Acer negundo	invasive species	
t-29	6	cherry	Prunus cerasus	protected	
t-30		9" white pine	Pinus strobus	off site	
t-31		8" white pine	Pinus strobus	off site	
t-32		8" elm	Ulmus	off site	
t-33	13	scotch pine	Pinus sylvestris	protected	
t-34	12	scotch pine	Pinus sylvestris	protected	
t-35	15	scotch pine	Pinus sylvestris	protected	
t-36	16	scotch pine	Pinus sylvestris	protected	
t-37	14	scotch pine	Pinus sylvestris	protected	
t-38	14	scotch pine	Pinus sylvestris	protected	
t-39	14	scotch pine	Pinus sylvestris	protected	
t-40	15	scotch pine	Pinus sylvestris	protected	
t-41		6" douglas fir	Pseudotsuga menziesii	off site	
t-42	32	twin 16" scotch pine	Pinus sylvestris	protected	
t-43	15	scotch pine	Pinus sylvestris	protected	
t-44	14	scotch pine	Pinus sylvestris	protected	
t-45	13	scotch pine	Pinus sylvestris	protected	
t-46	28	twin 14" elm	Ulmus	protected	
t-47	16	black walnut	Juglans nigra	protected	
t-48	13	dogwood	Cornus	protected	
t-49	7	black walnut	Juglans nigra	protected	
t-50	16	scotch pine	Pinus sylvestris	protected	REMOVE
Total	405	405 Total DBH x 20% allowable removal by ordinance = 81" DBH removal permitted			
		16" DBH removal is proposed			

LEGAL DESCRIPTION
(Taken from Warranty Deed, L. 4260, P. 219)

Township of Scio, County of Washtenaw, and State of Michigan, described as follows, to wit:

Beginning at the Southeast Corner of Lot 8, COLE AND HUSS SUBDIVISION, as recorded in Liber 8 of Plats, Page 39, Washtenaw County Records; thence North 89 degrees 57 minutes 00 seconds West 220.44 feet along the South Line of said Lot 8 and the East-West 1/4 line of Section 19, Town 2 South, Range 5 East, Scio Township, Washtenaw County, Michigan; thence North 00 degrees 40 minutes 00 seconds West 951.64 feet; thence North 73 degrees 18 minutes 00 seconds East 242.93 feet along the Northerly line of Lots 9 through 12, inclusive, COLE AND HUSS SUBDIVISION, to the Northeast Corner of said Lot 12; thence South 16 degrees 42 minutes 00 seconds East 330.00 feet to the Southeast Corner of said Lot 12; thence South 73 degrees 18 minutes 00 seconds West 110.66 feet to the Northeast corner of said Lot 8, thence South 00 degrees 52 minutes 00 seconds East 673.72 feet along the East line of said Lot 8 to the Place of Beginning, being a part of Lots 7, 8, and 9 and all of Lots 10, 11 and 12, COLE AND HUSS SUBDIVISION, as recorded in Liber 8 of Plats Page 39, Washtenaw County Records.

Being more particularly described as:

BEGINNING at the SE Corner of Lot 8 of "Cole and Huss Subdivision", as recorded in Liber 8 of Plats, Page 39, Washtenaw County Records,

thence N 89°57'00" W 220.44 feet along the E-W 1/4 line of Section 19, T2S, R5E, Scio Township, Washtenaw County, Michigan and the South line of said Lot 8; thence N 00°40'00" W 951.64 feet; thence N 73°18'00" E 243.00 feet along the Northerly line of Lots 9-12 of said "Cole and Huss Subdivision"; thence S 16°42'00" E 330.00 feet along the Easterly line of Lot 12 of said "Cole and Huss Subdivision"; thence S 73°18'00" W 110.66 feet along the Southerly line of Lots 11 & 12 of said "Cole and Huss Subdivision"; thence S 00°50'39" E 673.79 feet along the East line of said Lot 8 to the POINT OF BEGINNING. Being a part Lots 7, 8, 9 and all of Lots 10, 11 & 12 of "Cole and Huss Subdivision" located in the NW 1/4 of said Section 19 and containing 5.43+/- acres of land, more or less. Being subject to the rights of the public over that portion of land, as occupied by Jackson Road (Variable Width). Being subject to easements and restrictions of record, if

Being subject to and together with a Reciprocal Easement Agreement as recorded in Liber 2446, Pages 398-400, Washtenaw County Records.

SITE ADDRESS: 8197 JACKSON RD., ANN ARBOR, MICHIGAN

SURVEY# BY OTHERS

STATE OF MICHIGAN
GREGORY A. PETRU
ENGINEER NO. 50958
LICENSED PROFESSIONAL ENGINEER

REVISIONS
2-8-19 OWNER REVIEW
2-26-19 SITE PLAN SUBMITTAL
3-25-19 SITE PLAN SUBMITTAL
4-15-19 SITE PLAN SUBMITTAL
7-18-19 SITE PLAN REVISIONS
9-4-19 SITE PLAN REVISIONS
9-16-19 SITE PLAN REVISIONS
10-24-19 SITE PLAN REVISIONS

KEBS, INC. KYES ENGINEERING BRYAN LAND SURVEYS
2116 HASLETT ROAD, HASLETT, MI 48840
PH. 517-339-1014 FAX. 517-339-8047
Marshall Office
Ph. 269-781-9800

8197 Jackson Road
EXISTING CONDITIONS/TREE REMOVAL PLAN

SCALE: 1"= 40'	DESIGNER: CAP	APPROVED BY: JWK	
DATE: 1-28-19	PROJECT MGR. JWK	SHEET 6 OF 8	
AUTHORIZED BY: E.T. MacKENZIE COMPANY		JOB #: 94729	

E8 PERMANENT SEEDING SPECIFICATIONS

When
- To finalize stabilization of temporary seeding areas or when an area needs permanent stabilization following completion of construction. Also used when vegetative establishment can correct existing soil erosion or sedimentation problem.
- Within 5 days of final grade.

Why
- To stabilize soil and prevent or reduce soil erosion/sedimentation problems from developing.

Where
- Used on construction and earth change sites which require permanent vegetative stabilization.

How
1. Review SESC plan and construction phasing to identify areas in need of permanent vegetative stabilization.
2. Select perennial grass and ground cover for permanent cover.
3. Seed mixes vary. However, they should contain native species.
4. Seed mixes should be selected through consultation with a certified seed provider and with consideration of soil type, light, moisture, use applications, and native species content.
5. Soil tests should be performed to determine the nutrient and pH levels in the soil. The pH may need to be adjusted to between 6.5 and 7.0.
6. Prepare a 3–5" deep seedbed, with the top 3–4" consisting of topsoil.
7. Slopes steeper than 1:3 should be roughened.
8. Apply seed as soon as possible after seedbed preparation. Seed may be broadcast by hand, hydroseeding, or by using mechanical drills.
9. Mulch immediately after seeding.
10. Dormant seed mixes are for use after the growing season, using seed which lies dormant in the winter and begins growing as soon as site conditions become favorable.

PERMANENT SEEDING SPECIFICATION
SEED ALL DISTRUBED AREAS WITH THE FOLLOWING SEED MIXTURE OR APPROVED EQUAL.
MICHIGAN GREEN – 15% BLUEGRASS, 40% FESCUE, 45% RYEGRASS
APPLY AT A RATE OF 5 LBS./1000 SF

–APPLY SILT STOP OR APPROVED TACKIFIER TO SEED MIX.

STANDARD SYMBOL

MICHIGAN DEPARTMENT OF MANAGEMENT AND BUDGET

PERMANENT SEEDING SPECIFICATIONS (cont.) E8

How (cont.)
11. Protect seeded areas from pedestrian or vehicular traffic.
12. Divert concentrated flows away from the seeded area until vegetation is established.

Maintenance
- Inspect weekly and within 24 hours following each rain event in the first few months following installation to be sure seed has germinated and permanent vegetative cover is being established.
- Add supplemental seed as necessary.

Limitations
- Seeds need adequate time to establish.
- May not be appropriate in areas with frequent traffic.
- Seeded areas may require irrigation during dry periods.
- Seeding success is site specific, consider mulching or sodding when necessary.

MICHIGAN DEPARTMENT OF MANAGEMENT AND BUDGET

E8 PERMANENT SEEDING

Planting Zones:	Lower Peninsula (South of T20N) Zone 1	Lower Peninsula (North of T20N) Zone 2	Upper Peninsula Zone 3
Seeding Window Permanent Seeding	4/15 – 10/10	5/1 – 10/1	5/1 – 9/20
Seeding Window Dormant Seeding*	11/15 – Freeze	11/01 – Freeze	11/01 – Freeze

Source: Adapted from MDOT Interim 2003 Standard Specifications for Construction

	Zone 1 Lower Peninsula (South of U.S. 10)	Zone 2 Lower Peninsula (North of U.S. 10)	Zone 3 Upper Peninsula
Seeding Dates (with Irrigation or Mulch)	4/1 – 8/1	5/1 – 9/20	5/1 – 9/10
Seeding Dates (w/o Irrigation or Mulch)	4/1 – 5/20 or 8/10 – 10/1	5/1 – 6/10 or 8/1 – 9/20	5/1 – 6/15 or 8/1 – 9/20
Dormant Seeding Dates*	11/1 – Freeze	10/25 – Freeze	10/25 – Freeze

Source: Adapted from USDA NRCS Technical Guide §342 (1999)

* Dormant seeding is for use in the late fall after the soil temperature remains consistently below 50°F, prior to the ground freezing. This practice is appropriate if construction on a site is completed in the fall but the seed was not planted prior to recommended seeding dates. No seed germination will take place until spring. A cool season annual grass may be added in an attempt to have some fall growth.

- Mulch must be used with dormant seed.
- Do not seed when the ground is frozen or snow covered.
- Do not use a dormant seed mix on grassed waterways.

MICHIGAN DEPARTMENT OF MANAGEMENT AND BUDGET

E9 MULCH BLANKETS

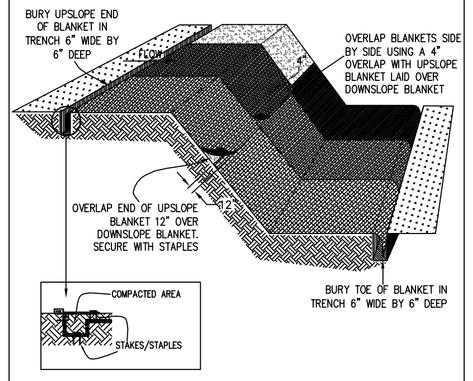

NOTES:
1. PLACE MULCH BLANKET PARALLEL TO FLOW AND ANCHOR SECURELY.
2. WHEN BLANKETS ARE USED IN FLOWING DITCH, BLANKETS SHOULD NOT OVERLAP IN DITCH CENTER PARALLEL TO FLOW.
3. STAPLES INSTALLED/SECURED ACCORDING TO MANUFACTURER'S SPECIFICATIONS.
4. WHERE POSSIBLE, CONSTRUCT WITH BIODEGRADABLE MATERIAL.

STANDARD SYMBOL

MICHIGAN DEPARTMENT OF MANAGEMENT AND BUDGET

E9 MULCH BLANKETS SPECIFICATIONS

When
- When seeded areas are subject to erosive surface flows, severe wind, or to protect non-vegetated slopes or areas during the winter.

Why
- Protects seeded areas and slopes against erosion from rain or wind. Holds soil moisture to allow for seed germination and reduces wind dessication of germinated seeds.

Where
- Use on exposed slopes, newly seeded areas, new ditch bottoms, and other areas subject to erosion.

How
1. Prepare subgrade to proper grade and compaction requirements.
2. Remove ruts, roots, soil clods, or other debris from surface subject to mulch blanket installation.
3. Spread or drill seed.
4. Consult with erosion control material supplier to select mulch blanket based on slope gradient, expected surface run-off, and protection term necessary (long or short term).
5. Position selected mulch blanket as close as possible to intended use location.
6. Install blanket at top of slope, first anchoring toe in trench 6" wide X 6" deep, progressing down-slope or down-gradient with approximately 12" of blanket extended beyond the up-slope portion of the trench.
7. Anchor the blanket with staples/stakes placed approximately 12" apart in the bottom of the trench. Backfill and compact the trench after securing.
8. Apply seed to compacted soil and fold the 12" portion of the blanket over compacted area and secure with a row of staples/stakes placed 12" apart across the width of the blanket.
9. Unroll the blankets down or horizontally across the slope.

MICHIGAN DEPARTMENT OF MANAGEMENT AND BUDGET

E9 MULCH BLANKETS SPECIFICATIONS

How (cont.)
10. Overlap blanket edges by a minimum of 4" and blanket ends by a minimum of 12". Overlaps should be in the direction of expected flow with the up-slope blanket placed over the down-slope blanket edge.
11. Secure down-slope end of blanket with staples/stakes and trench in.

Maintenance
- Check after a rain event to ensure the blanket is still in place.
- Keep eroded soil, vehicular and pedestrian traffic, and concentrated runoff away from the blanketed area.

Limitations
- Mulch blankets and anchors may inhibit mowing.

MICHIGAN DEPARTMENT OF MANAGEMENT AND BUDGET

SOIL EROSION CONTROL NOTES:

1. ALL SOIL EROSION CONTROL MEASURES SHALL BE CONSTRUCTED AND MAINTAINED IN ACCORDANCE WITH THE WASHTENAW COUNTY DRAIN COMMISSION AND/OR SCIO TWP. REQUIREMENTS AND PROJECT SPECIFICATIONS.
2. ANY EROSION OR SEDIMENT FROM WORK ON THIS SITE SHALL BE CONTAINED ON THE SITE AND NOT BE ALLOWED TO COLLECT ON ANY OFF-SITE AREAS, OR IN WATERWAYS; WATERWAYS INCLUDE BOTH NATURAL AND MANMADE OPEN DITCHES, STREAMS, STORM DRAINS, LAKES AND PONDS.
3. CONTRACTOR SHALL APPLY TEMPORARY EROSION AND SEDIMENTATION CONTROL MEASURES AS REQUIRED AND AS DIRECTED ON THESE PLANS. HE SHALL REMOVE TEMPORARY MEASURES AS SOON AS PERMANENT STABILIZATION OF SLOPES, DITCHES AND OTHER EARTH CHANGES HAVE BEEN ESTABLISHED.
4. A MINIMUM 100' BY 20' WIDE, 8" DEEP CLEAN STONE EXIT SHALL BE PROVIDED AT ALL CONSTRUCTION ENTRANCES. SHOULD THE STONE BECOME LESS EFFICIENT IT SHALL BE REPLACED. ALL CONSTRUCTION TRAFFIC WILL USE THE CLEAN STONE EXITS.
5. DUST CONTROL WILL BE EXERCISED AT ALL TIMES WITHIN THE PROJECT BY THE CONTRACTORS. SPRINKLING TANK TRUCKS SHALL BE AVAILABLE AT ALL TIMES TO BE USED ON HAUL ROUTES OR OTHER PLACES WHERE DUST BECOMES A PROBLEM.
6. SEDIMENT ⊕ C.B.'s SHALL BE REMOVED AFTER EVERY STORM. SEEDING OF EXPOSED AREAS SHALL BE COMPLETED WITHIN 5 DAYS OF FINAL GRADING.
7. ALL DISTURBED AREAS WILL RECEIVE PERMANENT EROSION CONTROL WITHIN 5 DAYS OF FINAL GRADING. AREAS NOT STABILIZED SHALL BE DIVERTED TOWARD RETENTION/SEDIMENT BASINS.
8. ANY CONSTRUCTION ACCESS ROAD WILL BE PROTECTED WITH CRUSHED STONE OR CRUSHED CONCRETE, AGGREGATE SIZE 2"–3".
9. WEATHER AND UNFORESEEN DELAYS MAY RESULT IN EXTENSION OF CONSTRUCTION SCHEDULE.
10. SITE DEVELOPMENT CONTRACTOR SHALL INSPECT SOIL EROSION CONTROL MEASURES ON A DAILY BASIS AND AFTER EVERY RAINFALL EVENT. ANY NEEDED REPAIRS SHALL BE PROMPTLY MADE.
11. SITE DEVELOPMENT CONTRACTOR SHALL MEET WITH SOIL EROSION ENFORCEMENT OFFICER PRIOR TO START OF WORK.
12. EACH DISTURBANCE ADJACENT TO WETLANDS, INLAND STREAMS & LAKES, OR ADJACENT TO SLOPES GREATER THAN 8% SHALL BE TOPSOILED, SEEDED, AND EROSION CONTROL MATTING APPROPRIATE FOR THE SLOPE CONDITIONS INSTALLED, WITHIN 3 DAYS OF FINAL GRADING OR FINAL ACTIVITY OF THOSE AREAS.

SEQUENCE OF CONSTRUCTION

1. INSTALL ALL TEMPORARY SILT FENCE PER PLAN AND AS SHOWN ON DETAIL.
2. CONSTRUCT THE TEMPORARY GRAVEL CONSTRUCTION ENTRANCE/EXITS AS SHOWN ON THIS PLAN.
3. INSTALL INLET PROTECTION FABRIC DROPS BETWEEN THE FRAME AND COVER OF ALL EXISTING YARD BASINS OR INLETS WHICH MAY BE SUSCEPTIBLE TO SEDIMENT EROSION FROM THE PROPOSED CONSTRUCTION AS SHOWN IN THESE PLANS.
4. WHILE MAINTAINING A VEGETATIVE BUFFER WHENEVER POSSIBLE STRIP AND STOCKPILE TOPSOIL ABOVE AREAS OF PROPOSED EXCAVATION OR GRADING FOR LATER USE ON SITE PLACE STOCKPILED TOPSOIL IN AREAS WHICH ARE NEITHER SUBJECT TO HIGH RUNOFF NOR ALONG STEEP SLOPES SEED AND MULCH STOCKPILES IMMEDIATELY TO PREVENT WIND BLOWN SEDIMENT POLLUTION AND EXCESSIVE DUST.
5. EXCAVATE FOR PROPOSED ROAD AND UTILITY CONSTRUCTION AS NECESSARY. DO NOT EXPOSE AREAS FAR IN ADVANCE OF THE PROPOSED CONSTRUCTION FOR THAT AREA. ROUGHEN AND SCARIFY EXPOSED SURFACES TO REDUCE RUNOFF VELOCITY AND SEDIMENTATION. MAINTAIN VEGETATION WHENEVER POSSIBLE TO PROVIDE A NATURAL BUFFER.
6. INSTALL INLET PROTECTION FABRIC DROPS IN ALL INLETS UPON CONSTRUCTION OF THE INLET.
7. INSTALL TEMPORARY STONE FILTER BERMS PERPENDICULAR TO EXPOSED STEEP SLOPES AS NECESSARY ALONG THE PROPOSED STREETS TO REDUCE RUNOFF VELOCITY AND SEDIMENTATION. USE TEMPORARY STONE CHECK DAMS TO SLOW DOWN AND/OR DIVERT HEAVY RUNOFF WHERE NECESSARY.
8. TOPSOIL, SEED, FERTILIZE AND MULCH ALL EXPOSED AREAS WITHIN 5 DAYS OF FINAL GRADING TO PROTECT AND RESTORE PERMANENT VEGETATION.
9. WATER EXPOSED GROUND REGULARLY TO CONTROL AIRBORNE PARTICULATE MATTER.
10. THE CONTRACTOR SHALL MAINTAIN ALL TEMPORARY SOIL EROSION AND SEDIMENTATION CONTROL MEASURES THROUGHOUT THE ENTIRE CONSTRUCTION PROCESS AND UNTIL PERMANENT VEGETATION IS REESTABLISHED IN ALL EXPOSED AREAS. ACCUMULATED SEDIMENT SHALL ALSO BE REMOVED FROM ALL STRUCTURES.
11. THE PERMITTEE SHALL MAINTAIN ALL PERMANENT SOIL EROSION AND SEDIMENTATION CONTROL MEASURES AFTER THE INITIAL CONSTRUCTION PROCESS AND UNTIL PERMANENT VEGETATION IS REESTABLISHED IN ALL EXPOSED AREAS. ACCUMULATED SEDIMENT SHALL ALSO BE REMOVED FROM ALL STRUCTURES.
12. THE SITE WILL BE PERIODICALLY INSPECTED BY THE LOCAL SESC PERMITTING AGENCY. THE CONTRACTOR AND PERMITTEE SHALL BECOME FAMILIAR WITH THE RULES AND REGULATIONS OF THAT OFFICE
13. UPON FINAL APPROVED INSPECTION OF THE COMPLETED CONSTRUCTION BY ALL REVIEWING AGENCIES, THE CONTRACTOR SHALL REMOVE ALL TEMPORARY SOIL EROSION AND SEDIMENTATION CONTROL MEASURES.

S51 SILT FENCE SPECIFICATIONS

When
- A temporary measure for preventing sediment movement.

Why
- Used to prevent sediment suspended in runoff from leaving an earth change area.

Where
- Use adjacent to critical areas, wetlands, base of slopes, and watercourses.

How
1. Install parallel to a contour.
2. The silt fence should be made of woven geotextile fabric.
3. Silt fence should accomodate no more than 1/2 to 1 acre of drainage per 100' of fence and on slopes less than 1:2 (↔:↑).
4. Dig a 6" trench along the area where the fence is to be installed.
5. Place 6" of the silt fence bottom flap into the trench.
6. Backfill the trench with soil and compact the soil on both sides. Create a small ridge on the up-slope side of the fence.
7. Install wooden stakes 6 – 10' apart and drive into the ground a minimum of 12".
8. Staple the geotextile fabric to the wooden stakes.
9. Join sections of silt fence by wrapping ends together (See drawing).

Maintenance
- Inspect frequently and immediately after each storm event. Check several times during prolonged storm events if necessary, repair immediately.
- If the sediment has reached 1/3 the height of the fence, the soil should be removed and disposed of in a stable upland site.
- The fence should be re-installed if water is seeping underneath it or if the fence has become ineffective.
- Silt fence should be removed once vegetation is established and up-slope area has stabilized.

MICHIGAN DEPARTMENT OF MANAGEMENT AND BUDGET

S51 SILT FENCE SPECIFICATIONS

Limitations
- Silt fence may cause temporary ponding and could fail if too much water flows through the area.
- Do not use in areas with concentrated flows.
- Chance of failure increases if fence is installed incorrectly or if sediment accumulation is not removed.

MICHIGAN DEPARTMENT OF MANAGEMENT AND BUDGET

S51 SILT FENCE

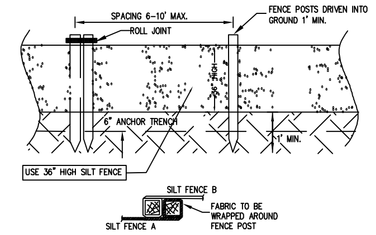

STANDARD SYMBOL

MICHIGAN DEPARTMENT OF MANAGEMENT AND BUDGET

S53 STABILIZED CONSTRUCTION ACCESS

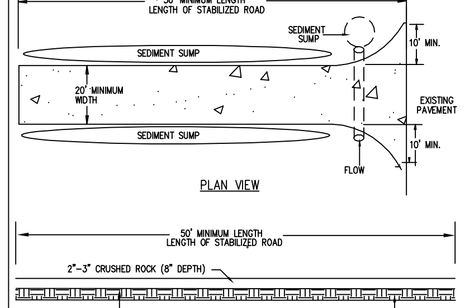

NOTES:
1. Establish stabilized construction entrance prior to the initiation of site construction activities.
2. Care should be taken to prevent material movement into adjacent wetlands/waterbodies.
3. Care should be taken to maintain existing roadside drainage via culvert installation, with sediment sump placed downflow of culvert.

STANDARD SYMBOL

MICHIGAN DEPARTMENT OF MANAGEMENT AND BUDGET

STABILIZED CONSTRUCTION ACCESS SPECIFICATIONS S53

Maintenance (cont.)
- Sediment deposited on public rights-of-way shall be removed immediately and returned to the construction site.
- If soils are such that washing of tires is required, it shall be done in a wash rack area, stabilized with stone, immediately prior to the construction access stabilized corridor.
- At the project completion, rock access road should be removed and disposed of unless utilized as subgrade for final road.

Limitations
- Effectiveness limited, sediment may be tracked onto roads requiring additional action.

MICHIGAN DEPARTMENT OF MANAGEMENT AND BUDGET

STABILIZED CONSTRUCTION ACCESS SPECIFICATIONS S53

When
- Construction traffic is expected to leave a construction site.
- Stabilization of interior construction roads is desired.

Why
- To minimize tracking of sediment onto public roadways and to minimize disturbance of vegetation.

Where
- Stabilized construction entrances shall be located at every point where construction traffic enters or leaves a construction site. Vehicles leaving the site must be routed over the rock ingress/egress corridor.

How
1. Stabilized construction access road should be established at the onset of the construction activities and maintained in place for the duration of the construction project.
2. Installation of this practice should be the responsibility of the site clearing or excavating contractor.
3. Access location should be cleared of woody vegetation.
4. Non-woven geotextile fabric shall be placed over the existing ground prior to placing stone.
5. Access size should be a minimum of 50'. (30' for single residence lot).
6. Access width should be 12' minimum, flared at the existing road to provide a turning radius.
7. Crushed aggregate (2" to 3"), or reclaimed or recycled concrete equivalent, shall be placed at least 8" deep over the length and width of the ingress/egress corridor.

Maintenance
- Periodic inspection and needed maintainence shall be provided after each rain event.
- Stabilized entrances shall be repaired and rock added as necessary.

MICHIGAN DEPARTMENT OF MANAGEMENT AND BUDGET

E12 RIPRAP

STREAM BANK APPLICATION

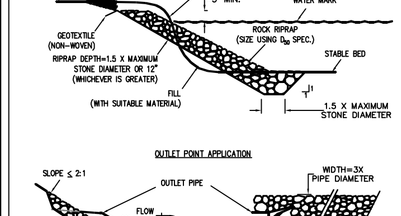

OUTLET POINT APPLICATION

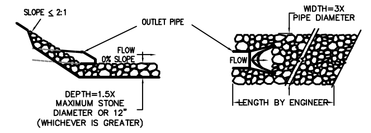

STANDARD SYMBOL

MICHIGAN DEPARTMENT OF MANAGEMENT AND BUDGET

RIPRAP SPECIFICATIONS E12

When
- When concentrated water flows have the potential to create scour, down-cutting, or lateral cutting.

Why
- To prevent loss of land or damage to utilities or structures. In aquatic applications, riprap is used to control channel meander and maintain capacity, protect against wave attack, and reduce sediment load.

Where
- In natural or constructed channels with areas susceptible to erosion from the action of water, ice, or debris, or to damage by livestock or vehicular traffic.
- In shoreline areas where the erosion problem may be solved through simple structural measures.
- On slopes with profiles measuring 1:1.5 or less.

How
1. Review subject site to identify areas subject to concentrated flows or wave/current attack.
2. The appropriateness and extent of riprap placement is site specific and should be determined in the field.
3. The area under review for riprap placement must be shaped and contoured appropriately by grading prior to material placement.
4. Non-woven geotextile fabric should be installed prior to riprap placement, with upper end and toe end of fabric buried or anchored to prevent movement.
5. Riprap placement should be started at a stabilized location and ended at a stabilized or contoured point.
6. Material selected for riprap should be hard, angular, and resistant to weathering. All appropriate material size depends on expected water energy and intended function of the material.

MICHIGAN DEPARTMENT OF MANAGEMENT AND BUDGET

RIPRAP SPECIFICATIONS E12

How (cont.)
7. Riprap mixture should be an even mixture of stone sizes based on the average, or D_{50}. This means 50% of the stone, by size, will be larger than the diameter specified, and 50% will be smaller than the size specified. The diameter of the largest stone should not be more than 1.5 times the D_{50} stone size.
8. See table on the following page for typical riprap stone sizes.
9. Rock shall be placed so that larger rocks are uniformly distributed and in contact with one another. Smaller rocks should fill the voids.
10. When in contact with moving water, riprap will tie into a stable bank at the downstream end and will be keyed into the bank at the upstream end. Riprap should extend 3 ft. above the ordinary high water mark or to the top of the bank on short slopes. Extend riprap a minimum 10 ft. beyond active erosion area.

Maintenance
- All installations should be inspected immediately after the first rainfall to confirm the stability of the placed material. Follow-up inspections should occur regularly and provisions made for prompt repair if needed.

Limitations
- Area is cleared prior to the addition of riprap, therefore no areas are preserved with native vegetation.

SIZE OF TYPICAL RIPRAP STONES

Weight (lbs.)	Average Spherical Diameter (in.)	D_{50}	Typical Rectangular Slope Length (ft.)	Width/Height (ft.)
50	10	12	5	3
150	14	16	7	4
300	18	21	9	5
600	22	26	11	6
1000	26	31	13	7
2000	33	39	16	8
4000	42	50	21	10
6000	48	57	24	12
8000	54	64	27	14

Source: Adapted from USDA NRCS

MICHIGAN DEPARTMENT OF MANAGEMENT AND BUDGET

E31 CHECK DAM

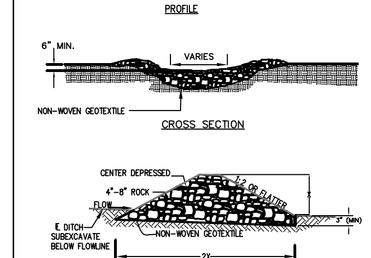

NOTE: BASE WIDTH SHOULD BE AT LEAST 2X THE HEIGHT

STANDARD SYMBOL

MICHIGAN DEPARTMENT OF MANAGEMENT AND BUDGET

CHECK DAM SPECIFICATIONS ES31

When
- To reduce surface flow velocities.

Why
- To minimize erosion in flow corridors.

Where
- Within constructed flow corridors to reduce velocity until permanent stabilization is achieved.
- Within existing flow corridors to address or prevent velocity-caused erosion.

How
1. The check dam shall be constructed of rock only.
2. The rock shall be placed on non-woven geotextile fabric.
3. Remove woody vegetation prior to placing non-woven geotextile fabric.
4. Non-woven geotextile fabric shall be inset a minimum of 3" below adjacent grades.
5. The check dam shall be constructed of 4"–8" stone. The stone shall be placed to completely cover the width of the flow corridor and shall be keyed into the sides of the channel.
6. The center of the check dam shall be lower than the outer edges, such that no flow goes around the structure.
7. The upstream side of the check dam can be lined with smaller crushed aggregate to improve efficiency.
8. Slopes of check dam should be 1:2 or flatter.

Maintenance
- Check dams should be inspected after each runoff event.
- Accumulated stone should be periodically cleaned.
- Needed repairs should be initiated immediately after inspection.
- Accumulated upflow sediment should be periodically removed.
- Where dam is intended as temporary structure, remove after stabilization is achieved.

Limitations
- Use only in small open channels which drain 10 acres or less.
- Not to be used in live stream.

MICHIGAN DEPARTMENT OF MANAGEMENT AND BUDGET

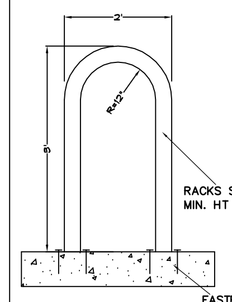

BIKE RACK DETAIL
SCALE: N.T.S.

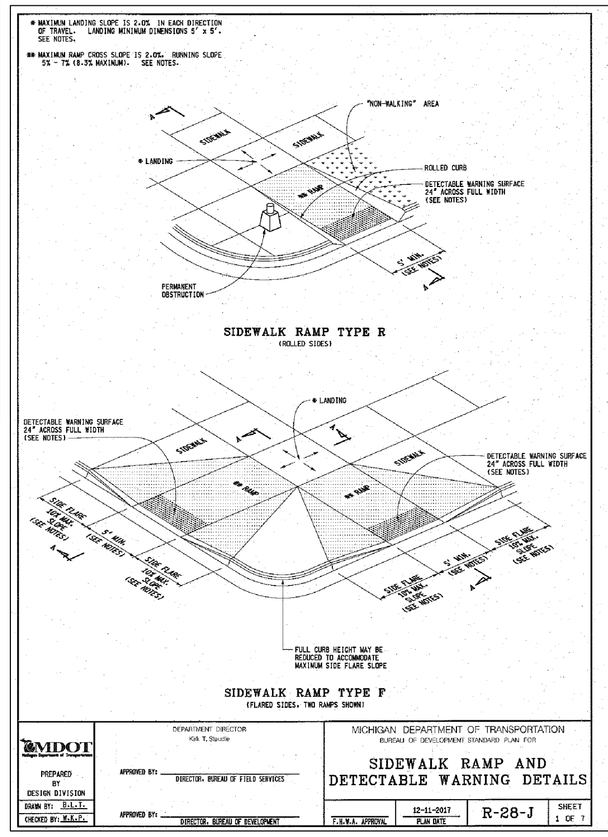

MDOT PREPARED BY DESIGN DIVISION
DRAWN BY: B.A.C.
CHECKED BY: K.A.C.

DEPARTMENT DIRECTOR
KIRK T. STEUDLE

APPROVED BY _____ BUREAU OF FIELD SERVICES

APPROVED BY _____ BUREAU OF DEVELOPMENT

MICHIGAN DEPARTMENT OF TRANSPORTATION
BUREAU OF DEVELOPMENT STANDARD PLAN FOR

SIDEWALK RAMP AND DETECTABLE WARNING DETAILS

12-11-2017 PLAN DATE	R-28-J	SHEET 1 OF 1
F.H.W.A. APPROVAL		

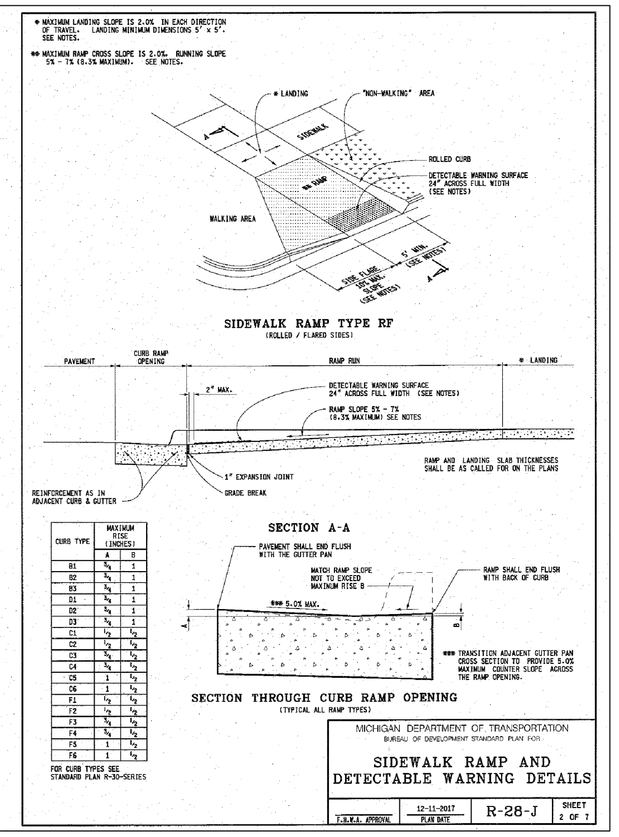

CURB TYPE	MINIMUM REVEAL (INCHES) A	B
B1	6	1
B2	6	1
B3	6	1
C1	6	1
C2	6	1
C3	6	1
C4	6	1
C5	6	1
C6	6	1
F1	6	1
F2	6	1
F3	6	1
F4	6	1
F5	6	1
F6	6	1

FOR CURB TYPES SEE STANDARD PLAN B-SERIES

MICHIGAN DEPARTMENT OF TRANSPORTATION
BUREAU OF DEVELOPMENT STANDARD PLAN FOR

SIDEWALK RAMP AND DETECTABLE WARNING DETAILS

12-11-2017 PLAN DATE	R-28-J	SHEET 2 OF 3
F.H.W.A. APPROVAL		

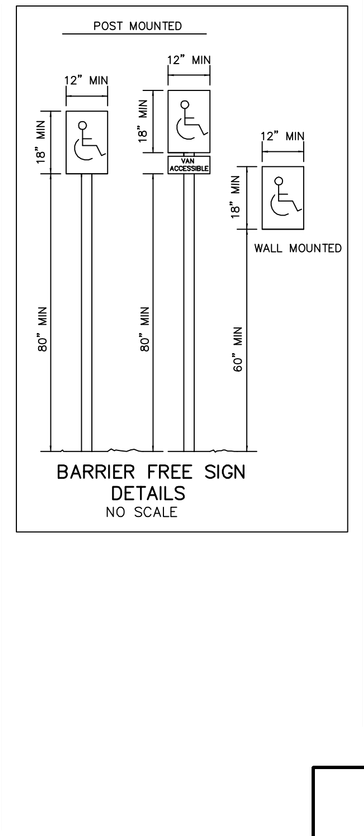

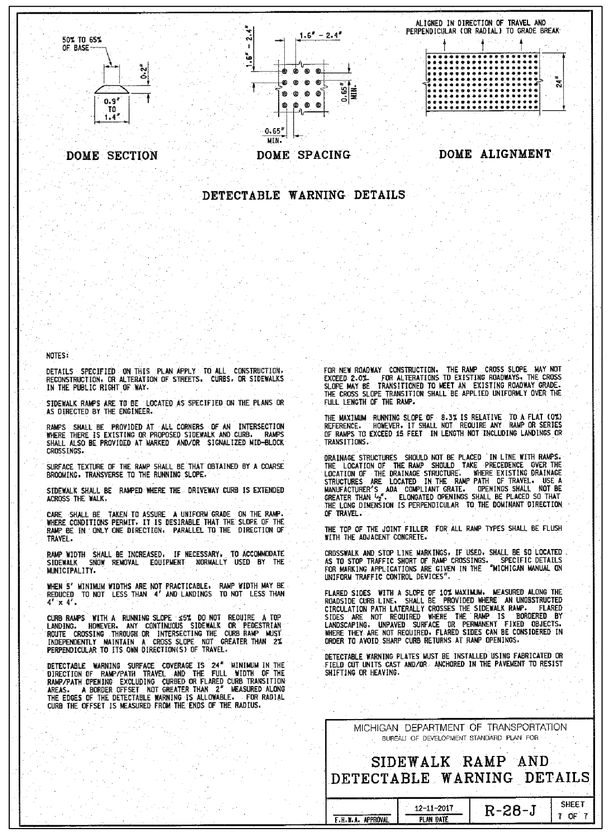

NOTES:

DETAILS SPECIFIED ON THIS PLAN APPLY TO ALL CONSTRUCTION, RECONSTRUCTION, OR ALTERATION OF STREETS, CURBS, OR SIDEWALKS IN THE PUBLIC RIGHT OF WAY.

SIDEWALK RAMPS ARE TO BE LOCATED AS SPECIFIED ON THE PLANS OR AS DIRECTED BY THE ENGINEER.

RAMPS SHALL BE PROVIDED AT ALL CORNERS OF AN INTERSECTION WHERE THERE IS EXISTING OR PROPOSED SIDEWALK AND CURB. RAMPS SHALL ALSO BE PROVIDED AT MARKED AND/OR SIGNALIZED MID-BLOCK CROSSINGS.

SURFACE TEXTURE OF THE RAMP SHALL BE THAT OBTAINED BY A COARSE BROOMING, PERPENDICULAR TO THE RUNNING SLOPE.

SIDEWALK SHALL BE RAMPED WHERE THE DRIVEWAY CURB IS EXTENDED ACROSS THE WALK.

WHERE SIDEWALK EXISTS AT UNIFORM GRADE ON THE RAMP, WHERE CONDITIONS PERMIT, IT IS DESIRABLE THAT THE SLOPE OF THE RAMP BE ON TANGENT LINES PARALLEL TO THE DIRECTION OF TRAVEL.

RAMP WIDTH SHALL BE INCREASED, IF NECESSARY, TO ACCOMMODATE SIDEWALK SNOW REMOVAL EQUIPMENT NORMALLY USED BY THE MUNICIPALITY.

WHEN 5' MINIMUM WIDTHS ARE NOT PRACTICABLE, RAMP WIDTH MAY BE REDUCED TO NOT LESS THAN 4' AND LANDINGS TO NOT LESS THAN 4' x 4'.

CURB RAMPS WITH A RUNNING SLOPE ≥5% DO NOT REQUIRE A TOP LANDING. HOWEVER, ANY CONTINUOUS SIDEWALK OR PEDESTRIAN ROUTE CROSSING THROUGH OR INTERSECTING THE CURB RAMP MUST INDEPENDENTLY MAINTAIN A CROSS SLOPE NOT GREATER THAN 2% PERPENDICULAR TO ITS OWN DIRECTION(S) OF TRAVEL.

DETECTABLE WARNINGS SURFACE CONSISTS OF 24" MINIMUM IN THE DIRECTION OF RAMP OR WALK TRAVEL AND EXTEND THE FULL WIDTH OF THE RAMP, LANDING, OR WALK. DETECTABLE WARNINGS SHALL CONTRAST VISUALLY WITH ADJACENT SURFACES, EITHER LIGHT-ON-DARK, OR DARK-ON-LIGHT. A BORDER OFFSET NOT GREATER THAN 2" MEASURED ALONG THE EDGES OF THE DETECTABLE WARNING IS ALLOWABLE. FOR RADIAL CURB THE OFFSET IS MEASURED FROM THE ENDS OF THE RADIUS.

FOR NEW ROADWAY CONSTRUCTION, THE RAMP CROSS SLOPE MAY NOT EXCEED 2% AND THE RAMP RUNNING SLOPE MAY NOT EXCEED 5%. RAMP SLOPE MAY BE TRANSITIONED TO MEET AN EXISTING ROADWAY GRADE. THE CROSS SLOPE TRANSITION SHALL BE APPLIED UNIFORMLY OVER THE FULL LENGTH OF THE RAMP.

THE MAXIMUM RUNNING SLOPE OF 8.3% IS RELATIVE TO A FLAT GTRD REFERENCE. HOWEVER, IT SHALL NOT EXCEED ANY RAMP OR SECTION OF RAMPS TO EXCEED 15 FEET IN LENGTH NOT INCLUDING LANDINGS OR TRANSITIONS.

DRAINAGE STRUCTURES SHOULD NOT BE PLACED IN LINE WITH RAMPS; THE LOCATION OF THE RAMP SHALL TAKE PRECEDENCE OVER THE LOCATION OF THE DRAINAGE STRUCTURE. WHERE EXISTING DRAINAGE STRUCTURES CANNOT BE MOVED, A RAMP WITH GRATES (AS PER MANUFACTURER'S ADA COMPLIANT DETAIL, WHERE GRATES SHALL NOT BE GREATER THAN ½" ELONGATED OPENINGS) SHALL BE PLACED SO THAT THE LONG DIMENSION IS PERPENDICULAR TO THE BOUNDARY DIRECTION OF TRAVEL.

VAN1LED6NW

RAB | Outdoor

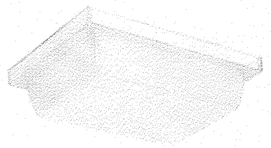

Low-profile vandalproof fixture replaces traditional incandescent luminaires delivering impressive energy savings.

Color: White Weight: 1.2 lbs

Project: Type:

Prepared By: Date:

Driver Info

Type	Constant Current
120V	0.055A
208V	N/A
240V	N/A
277V	N/A
Input Watts	6.4W
Efficiency	94%

LED Info

Watts	6W
Color Temp	4000K (Neutral)
Color Accuracy	83 CRI
L70 Lifespan	50,000
Lumens	813
Efficacy	127 LPW

Technical Specifications

Listings

UL Listing:
Suitable for Wet Locations. Covered Ceiling Mount Only.

IESNA LM-79 & IESNA LM-80 Testing:
RAB LED luminaires and LED components have been tested by an independent laboratory in accordance with IESNA LM-79 and LM-80.

DLC Listed:
This product is on the Design Lights Consortium (DLC) Qualified Products List and is eligible for rebates from DLC Member Utilities. DLC Product Code: PZB3362Z

Electrical

Dimmer Compatibility:
TRIAC/ELV dimming capable. See dimmer compatibility guide here.

Surge Protection:
2.5KV

Driver:
AC board, 50/60 Hz., 120V: 55mA

THD:
11.4% at 120V

Power Factor:
99.3% at 120V

Construction

Cold Weather Starting:
The minimum starting temperature is -30°C (-22°F)

Ambient Temperature:
Suitable for use in 45°C (113°F)

Housing:
Precision steel housing

Mounting:
Ceiling mount to recessed junction with knockout template. Tamperproof screws.

Lens:
Vandalproof, frosted polycarbonate drop lens

Gaskets:
High-temperature silicone gaskets

Finish:
Our environmentally friendly polyester powder coatings are formulated for high-durability and long-lasting color

Green Technology:
Mercury and UV free. RoHS-compliant components.

LED Characteristics

Lifespan:
50,000 hour LED lifespan based on IES LM-80 results and TM-21 calculations

LEDs:
120V long-life LEDs

Color Stability:
RAB LEDs exceed industry standards for chromatic stability

ALED2T105SFNRG/PCS

RAB | Outdoor

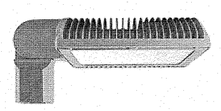

Color: Gray Weight: 32.0 lbs

Project: Type:

Prepared By: Date:

Driver Info

Type	Constant Current
120V	0.89A
208V	N/A
240V	N/A
277V	N/A
Input Watts	106.3W
Efficiency	99%

LED Info

Watts	105W
Color Temp	4000K (Neutral)
Color Accuracy	72 CRI
L70 Lifespan	100,000
Lumens	12,753
Efficacy	120 LPW

Technical Specifications

Electrical

Photocell:
120V Swivel Photocell included. Photocell is only compatible with 120V.

THD:
5.4% at 120V, 15.4% at 277V

Surge Protection:
4kV

Power Factor:
99.6% at 120V, 94.4% at 277V

Listings

DLC Listed:
This product is on the Design Lights Consortium (DLC) Qualified Products List and is eligible for rebates from DLC Member Utilities. DLC Product Code: P0000177A

UL Listing:
Suitable for wet locations

IESNA LM-79 & LM-80 Testing:
RAB LED luminaires and LED components have been tested by an independent laboratory in accordance with IESNA LM-79 and LM-80.

LED Characteristics

Lifespan:
100,000-hour LED lifespan based on IES LM-80 results and TM-21 calculations

LEDs:
Multi-chip, high-output, long-life LEDs

Color Stability:
LED color temperature is warranted to shift no more than 200K in CCT over a 5-year period

Color Uniformity:
RAB's range of CCT (Correlated Color Temperature) follows the guidelines of the American National Standard for Specifications for the Chromaticity of Solid State Lighting (SSL) Products, ANSI C78.377-2017.

Construction

IES Classification:
The Type II distribution is ideal for wide walkways, on ramps and entrance roadways, bike paths and other long and narrow lighting applications. This type is meant for lighting larger areas and usually is located near the roadside. This type of lighting is commonly found on smaller side streets or jogging paths.

Effective Projected Area:
EPA = 2.2

Maximum Ambient Temperature:
Suitable for use in 40°C (104°F)

Cold Weather Starting:
Minimum starting temperature is -40°C (-40°F)

Thermal Management:
Superior thermal management with external "Air-Flow" fins

Lens:
Tempered glass lens

Housing:
Die-cast aluminum housing, lens frame and mounting arm

Mounting:
Heavy-duty mounting arm with "O" ring seal & stainless steel screws

WP4FCSC400QT

RAB | Outdoor

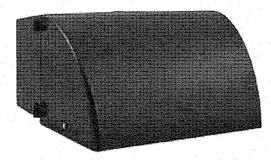

Color: Bronze Weight: 32.5 lbs

Project: Type:

Prepared By: Date:

Lamp Info

Type	ED18
Watts	400W
Shape/Size	N/A
Base	N/A
ANSI	N/A
Hours	24,000
Lamp Lumens	50,000
Efficacy	107.8 LPW

Ballast Info

Type	CWA HPF QT
120V	3.7/3.8A
208V	2.2/2.2A
240V	1.9/1.9A
277V	1.6/1.7A
Input Watts	464W
Efficiency	86%

Technical Specifications

Listings

UL Listing:
Suitable for wet locations. HID fixtures can be wired with 90°C supply wiring if supply wires are routed 3" away from the ballast.

Construction

Housing:
Die cast aluminum 1/2" NPS tapped holes top, both sides and back for conduit or photocontrol. Hinged reflector frame. Continuous silicone rubber gasket.

Reflector:
Specular anodized aluminum, removable for installation. Symmetrical light pattern maximizes distance between fixtures.

Finish:
Formulated for high durability and long-lasting color

Optical

Refractor:
Prismatic optics designed to minimize glare and throw light down and out. Heat resistant borosilicate glass.

Other

Buy American Act Compliance:
RAB values USA manufacturing! Upon request, RAB may be able to manufacture this product to be compliant with the Buy American Act (BAA). Please contact customer service to request a quote for the product to be made BAA compliant.

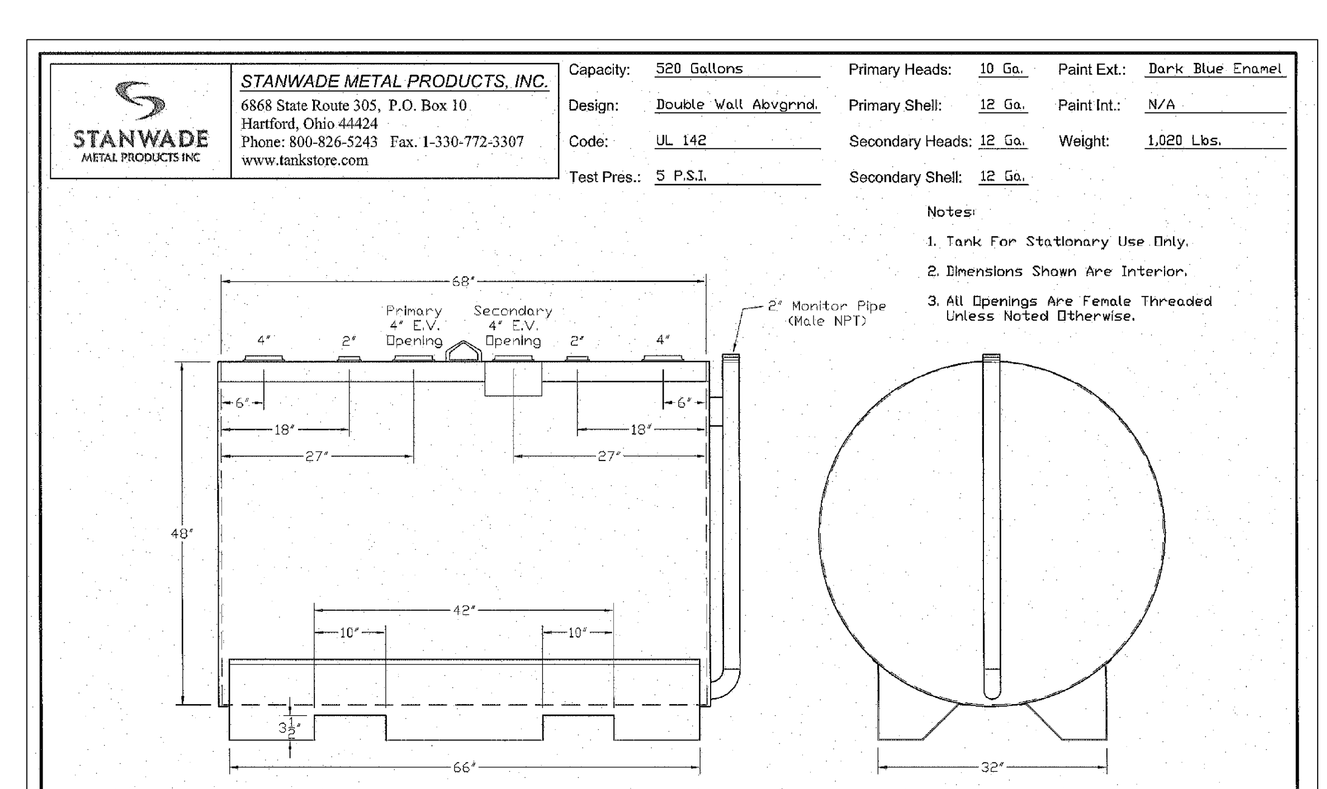

VAN1LED6NW

RAB | Outdoor

Technical Specifications (continued)

LED Characteristics

Color Uniformity:
RAB's range of CCT (Correlated Color Temperature) follows the guidelines of the American National Standard for Specifications for the Chromaticity of Solid State Lighting (SSL) Products, ANSI C78.377-2017.

Other

Optional Sensor:
VAN1LED is compatible with occupancy sensors. Click here to see all occupancy sensor accessories.

Warranty:
RAB warrants that our LED products will be free from defects in materials and workmanship for a period of five (5) years from the date of delivery to the end user, including coverage of light output, color stability, driver performance and fixture finish. RAB's warranty is subject to all terms and conditions found at radiantline.com/warranty.

Equivalency :
Equivalent to 60W Incandescent

Buy American Act Compliance:
RAB values USA manufacturing! Upon request, RAB may be able to manufacture this product to be compliant with the Buy American Act (BAA). Please contact customer service to request a quote for the product to be made BAA compliant.

Dimensions

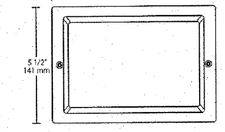

Features

Vandalproof polycarbonate drop lens
Ultra efficiency
Low-profile design

Ordering Matrix

Family	Wattage	Color Temp	Finish
VAN1LED	6	N	W
	6 = 6W 12 = 12W	Blank = 5000K (Cool) N = 4000K (Neutral) Y = 3000K (Warm)	W = White

Copyright © 2019 RAB Lighting All Rights Reserved Note: Specifications are subject to change at any time without notice

ALED2T105SFNRG/PCS

RAB | Outdoor

Technical Specifications (continued)

Construction

Reflector:
Specular vacuum-metallized polycarbonate

Gaskets:
High-temperature silicone gaskets

IP Rating:
Ingress Protection rating of IP66 for dust and water

Finish:
Formulated for high durability and long-lasting color

Green Technology:
Mercury and UV free. RoHS-compliant components.

Other

Warranty:
RAB warrants that our LED products will be free from defects in materials and workmanship for a period of five (5) years from the date of delivery to the end user, including coverage of light output, color stability, driver performance and fixture finish. RAB's warranty is subject to all terms and conditions found at radiantline.com/warranty.

Equivalency:
Replaces 320W Metal Halide

Buy American Act Compliance:
RAB values USA manufacturing! Upon request, RAB may be able to manufacture this product to be compliant with the Buy American Act (BAA). Please contact customer service to request a quote for the product to be made BAA compliant.

Optical

BUG Rating:
B1 U0 G2

Dimensions

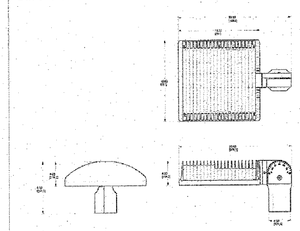

Features

96% energy cost savings vs. MH
100,000 hour LED lifespan
5 Year, No-Compromise Warranty

Ordering Matrix

Family	Optics	Wattage	Mounting	Color Temp	Finish	Driver Options	Options	Other Options
ALED	2T	105	SF	N	RG		/PCS	
	1T = Type IV 3T = Type III 2T = Type II	59 = 50W 78 = 78W 105 = 105W 125 = 125W 150 = 150W	Blank = Pole mount SF = Slipfitter	Blank = 5000K (Cool) N = 4000K (Neutral) Y = 3000K (Warm)	Blank = Bronze RG = Roadway Gray W = White K = Black	Blank = 120-277V /480 = 480V /BL = Bi-Level /D10 = 0-10V Dimming	Blank = No Option /LC = Lightcloud® Controller /PCS = 120V Swivel Photocell /PCS2 = 277V Swivel Photocell /PCT = 120-277V Twistlock Photocell /PCS4 = 480V Swivel Photocell /PCT4 = 480V Twistlock Photocell /WS2 = Multi-Level Motion Sensor 20 ft. /WS4 = Multi-Level Motion Sensor 40 ft.	Blank = Standard USA = BAA Compliant

Copyright © 2019 RAB Lighting All Rights Reserved Note: Specifications are subject to change at any time without notice

WP4FCSC400QT

RAB | Outdoor

Dimensions



Features

Hinged door frame opens and remains captive for easy relamping
Precision die cast aluminum housing with durable polyester powder coating
Silicone gasket remains in place during relamping
Tempered glass reflector
Long life lamp included

Copyright © 2019 RAB Lighting All Rights Reserved Note: Specifications are subject to change at any time without notice

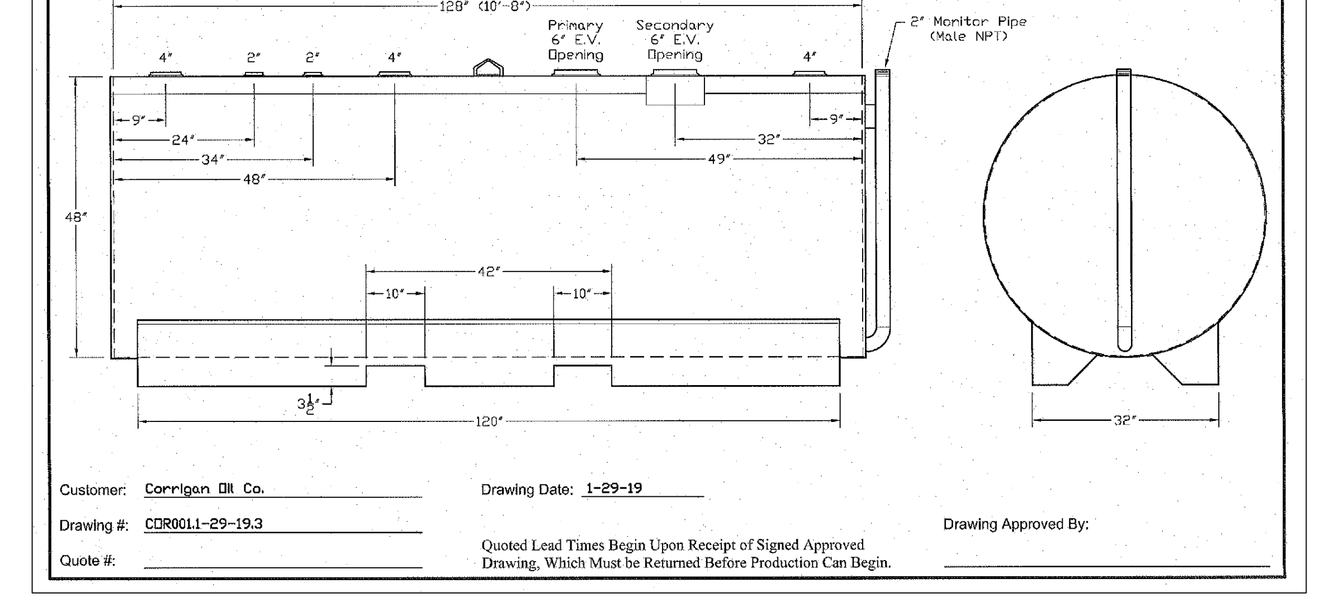

SURVEY BY OTHERS

STATE OF MICHIGAN
GREGORY A. PETRU
ENGINEER NO. 50958
LICENSED PROFESSIONAL ENGINEER

REVISIONS
2-9-19 OWNER REVIEW
2-26-19 SITE PLAN SUBMITTAL
3-25-19 SITE PLAN SUBMITTAL
4-15-19 SITE PLAN SUBMITTAL
7-18-19 SITE PLAN REVISIONS
9-4-19 SITE PLAN REVISIONS
9-16-19 SITE PLAN REVISIONS
10-24-19 SITE PLAN REVISIONS

KEBS, INC. KYES ENGINEERING BRYAN LAND SURVEYS
2116 HASLETT ROAD, HASLETT, MI 48840
PH. 517-339-1014 FAX. 517-339-8047
Marshall Office
Ph. 269-781-9800

8197 Jackson Road

DETAIL SHEET 2

SCALE: NONE	DESIGNER: JWK	APPROVED BY: JWK
DATE: 1-28-19	PROJECT MGR. JWK	SHEET 8 OF 8
AUTHORIZED BY: E.T. MacKENZIE COMPANY		JOB #: 94729

8197 Jackson Road

SCIO TOWNSHIP, WASHTENAW COUNTY, MICHIGAN

APPLICANT/OWNER::
E.T. MACKENZIE COMPANY
4248 W. SAGINAW HWY.
GRAND LEDGE, MI. 48837
PH: (517) 627-8408
FAX: (517) 627-4470

ENGINEER/SURVEYOR:
KEBS, Inc.
2116 HASLETT RD.
HASLETT, MI. 48840
PH: (517) 339-1014
FAX: (517) 339-8047

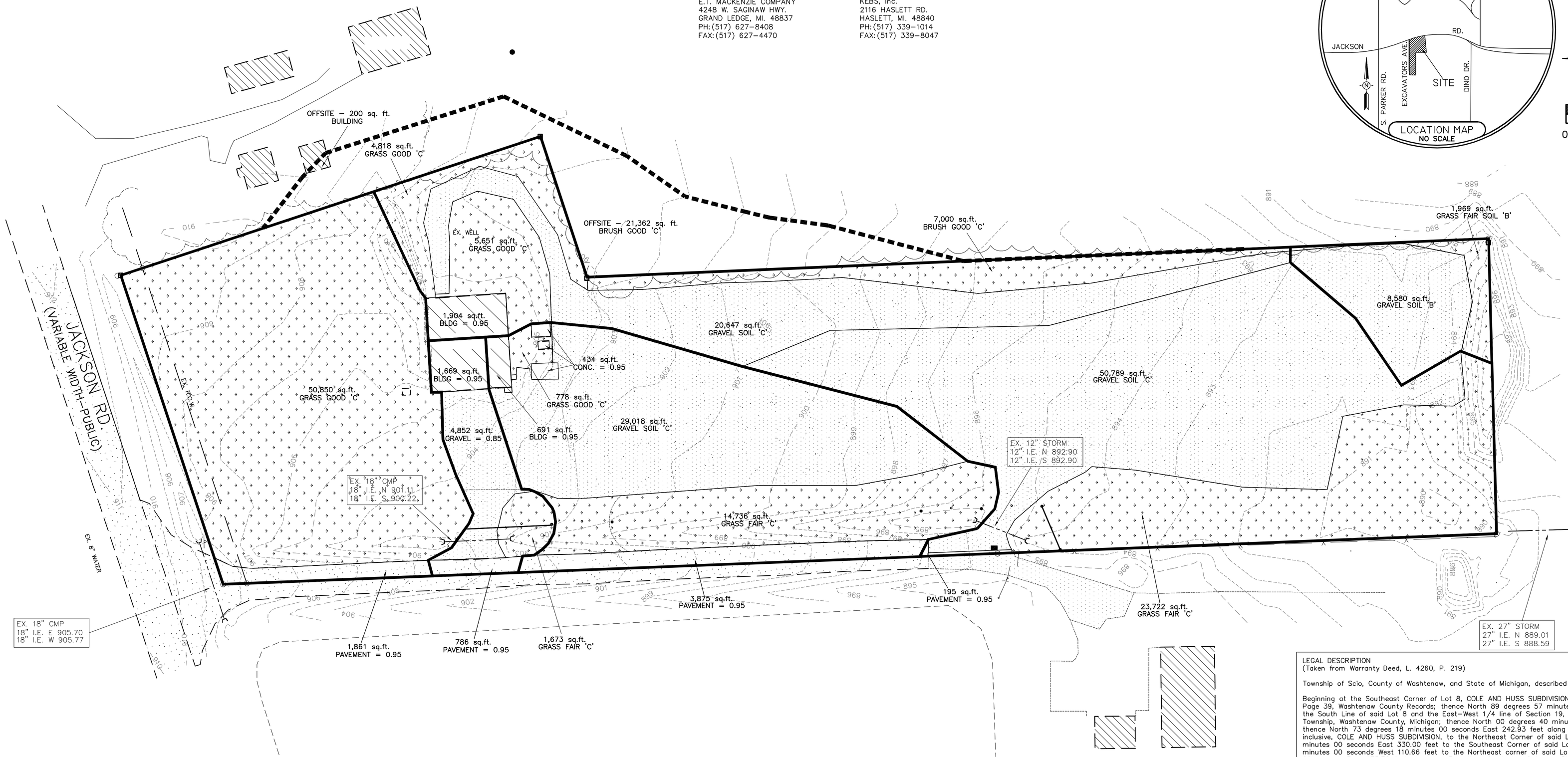

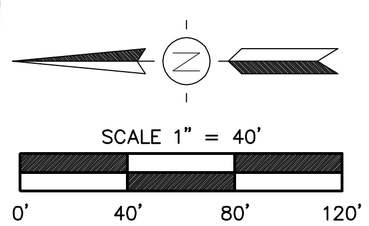

LEGAL DESCRIPTION
(Taken from Warranty Deed, L. 4260, P. 219)

Township of Scio, County of Washtenaw, and State of Michigan, described as follows, to wit:

Beginning at the Southeast Corner of Lot 8, COLE AND HUSS SUBDIVISION, as recorded in Liber 8 of Plats, Page 39, Washtenaw County Records; thence North 89 degrees 57 minutes 00 seconds West 220.44 feet along the South Line of said Lot 8 and the East-West 1/4 line of Section 19, Town 2 South, Range 5 East, Scio Township, Washtenaw County, Michigan; thence North 00 degrees 40 minutes 00 seconds West 951.64 feet; thence North 73 degrees 18 minutes 00 seconds East 242.93 feet along the Northerly line of Lots 9 through 12, inclusive, COLE AND HUSS SUBDIVISION, to the Northeast Corner of said Lot 12; thence South 16 degrees 42 minutes 00 seconds East 330.00 feet to the Southeast Corner of said Lot 12; thence South 73 degrees 18 minutes 00 seconds West 110.66 feet to the Northeast corner of said Lot 8, thence South 00 degrees 52 minutes 00 seconds East 673.72 feet along the East line of said Lot 8 to the Place of Beginning, being a part of Lots 7, 8, and 9 and all of Lots 10, 11 and 12, COLE AND HUSS SUBDIVISION, as recorded in Liber 8 of Plats Page 39, Washtenaw County Records.

Being more particularly described as:

BEGINNING at the SE Corner of Lot 8 of "Cole and Huss Subdivision", as recorded in Liber 8 of Plats, Page 39, Washtenaw County Records,

thence N 89°57'00" W 220.44 feet along the E–W 1/4 line of Section 19, T2S, R5E, Scio Township, Washtenaw County, Michigan and the South line of said Lot 8; thence N 00°40'00" W 951.64 feet;
thence N 73°18'00" E 243.00 feet along the Northerly line of Lots 9–12 of said "Cole and Huss Subdivision";
thence S 16°42'00" E 330.00 feet along the Easterly line of Lot 12 of said "Cole and Huss Subdivision";
thence S 73°18'00" W 110.66 feet along the Southerly line of Lots 11 & 12 of said "Cole and Huss Subdivision";
thence S 00°50'39" E 673.79 feet along the East line of said Lot 8 to the POINT OF BEGINNING. Being a part Lots 7, 8, 9 and all of Lots 10, 11 & 12 of "Cole and Huss Subdivision" located in the NW 1/4 of said Section 19 and containing 5.43+/– acres of land, more or less. Being subject to the rights of the public over that portion of land, as occupied by Jackson Road (Variable Width). Being subject to easements and restrictions of record, if

Being subject to and together with a Reciprocal Easement Agreement as recorded in Liber 2446, Pages 398–400, Washtenaw County Records.

DRAINAGE CALCULATIONS:

EXISTING SITE: 236,498 SF = 5.43 ACRES + OFFSITE (EAST)
TOTAL DRAINAGE TO SW CORNER (EX. 27" PIPE): 258,060 SF = 5.92 ACRES

EXISTING IMPERVIOUS (BLDG/ASPH./CONC. SOIL 'C') = 11,615 SF (CN=98)
EXISTING IMPERVIOUS (GRAVEL SOIL 'B') = 8,580 SF (CN=85)
EXISTING IMPERVIOUS (GRAVEL SOIL 'C') = 105,306 SF (CN=89)
EXISTING PERVIOUS (GRASS GOOD 'C') = 62,097 SF (CN=74)
EXISTING PERVIOUS (GRASS FAIR 'C') = 40,131 SF (CN=79)
EXISTING PERVIOUS (GRASS FAIR 'B') = 1,969 SF (CN=69)
EXISTING PERVIOUS (BRUSH GOOD 'C') = 28,362 SF (CN=65)

TOTAL AREA: 5.92 ACRES
TOTAL CURVE NUMBER: 481.73
CURVE NUMBER AVG.: 81.37

EX. LEGEND

= SET 1/2" BAR WITH CAP	= SANITARY MANHOLE
= FOUND IRON AS NOTED	= DRAINAGE MANHOLE
= DEED LINE	= ELECTRIC MANHOLE
= DISTANCE NOT TO SCALE	= TELEPHONE MANHOLE
= FENCE	= CATCHBASIN
= ASPHALT	= SANITARY CLEANOUT
= CONCRETE	= FIRE HYDRANT
= GRAVEL	= VALVE
= EXISTING SPOT ELEVATION	= UTILITY POLE
= EXISTING CONTOUR ELEVATION	= LIGHT POLE
= SANITARY SEWER	= GUY POLE
= STORM SEWER	= GUY WIRE
= WATER LINE	= UTILITY PEDESTAL
= GAS LINE	= TRANSFORMER
= UNDERGROUND TELEPHONE	= HANDHOLE
= UNDERGROUND TELEVISION	= ELECTRIC METER
= UNDERGROUND ELECTRIC	= GAS METER
= OVERHEAD WIRES	= WATER METER
= DECIDUOUS TREE	= SOIL BORING
	= SIGN
= EVERGREEN TREE	= POST
	= AIR CONDITIONING UNIT



72 HOURS
(3 WORKING DAYS)
BEFORE YOU DIG
CALL MISS DIG
800-482-7171
(TOLL-FREE)

SITE ADDRESS: 8197 JACKSON RD., ANN ARBOR, MICHIGAN

SURVEY BY OTHERS

STATE OF MICHIGAN
GREGORY A. PETRU
ENGINEER NO. 50958
LICENSED PROFESSIONAL ENGINEER

REVISIONS
2-6-19 OWNER REVIEW
2-26-19 SITE PLAN SUBMITTAL
3-25-19 SITE PLAN SUBMITTAL
4-15-19 SITE PLAN SUBMITTAL
7-18-19 SITE PLAN REVISIONS
9-4-19 SITE PLAN REVISIONS
9-16-19 SITE PLAN REVISIONS
10-24-19 SITE PLAN REVISIONS

KEBS, INC.
KYES ENGINEERING
BRYAN LAND SURVEYS
2116 HASLETT ROAD, HASLETT, MI 48840
PH. 517-339-1014 FAX. 517-339-8047
Marshall Office
Ph. 269-781-9800

8197 Jackson Road

DRAINMAP – EXISTING

SCALE: 1"= 40'	DESIGNER: GAP	APPROVED BY: JWK
DATE: 1-28-19	PROJECT MGR. JWK	SHEET D1
AUTHORIZED BY: E.T. MacKENZIE COMPANY		JOB #: 94729

8197 Jackson Road

SCIO TOWNSHIP, WASHTENAW COUNTY, MICHIGAN



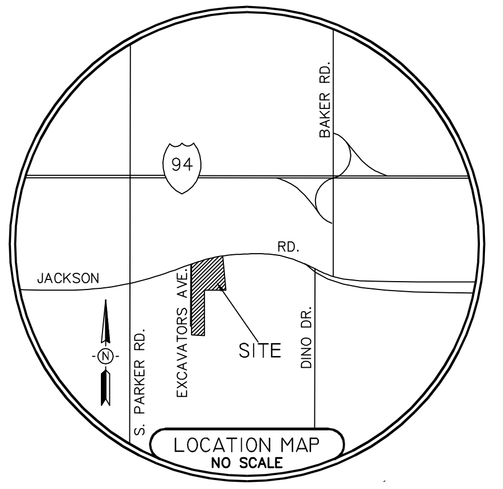

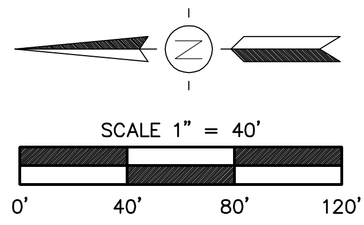

INFILTRATION NOTES:
TEST PITS WERE DUG AND EVALUATED BY G2 CONSULTING GROUP TO DETERMINE EXISTING INFILTRATION CAPABILITY. HOWEVER, DUE TO COHESIVE SOILS AND A HIGH WATER TABLE, IT WAS DETERMINED THAT INFILTRATION WOULD NOT BE FEASIBLE.

LEGEND

- PROPOSED WATER MAIN
- PROPOSED SANITARY SEWER
- PROPOSED STORM SEWER
- PROPOSED HYDRANT
- PROPOSED GATE VALVE
- PROPOSED SAN. M.H.
- PROPOSED STORM M.H.
- PROPOSED C.B.
- PROPOSED GRADES

EX. LEGEND

- = SET 1/2" BAR WITH CAP
- = FOUND IRON AS NOTED
- = DEED LINE
- = DISTANCE NOT TO SCALE
- = FENCE
- = ASPHALT
- = CONCRETE
- = GRAVEL
- = EXISTING SPOT ELEVATION
- = EXISTING CONTOUR ELEVATION
- = SANITARY SEWER
- = STORM SEWER
- = WATER LINE
- = GAS LINE
- = UNDERGROUND TELEPHONE
- = UNDERGROUND TELEVISION
- = UNDERGROUND ELECTRIC
- = OVERHEAD WIRES
- = DECIDUOUS TREE
- = EVERGREEN TREE
- = SANITARY MANHOLE
- = DRAINAGE MANHOLE
- = ELECTRIC MANHOLE
- = TELEPHONE MANHOLE
- = CATCHBASIN
- = SANITARY CLEANOUT
- = FIRE HYDRANT
- = VALVE
- = UTILITY POLE
- = LIGHT POLE
- = GUY POLE
- = GUY WIRE
- = UTILITY PEDESTAL
- = TRANSFORMER
- = HANDHOLE
- = ELECTRIC METER
- = GAS METER
- = WATER METER
- = SOIL BORING
- = SIGN
- = POST
- = AIR CONDITIONING UNIT

DRAINAGE CALCULATIONS (PROP.):

PROPOSED SITE: 236,498 SF = 5.43 ACRES + OFFSITE (EAST)
TOTAL DRAINAGE TO POND: 258,060 SF = 5.92 ACRES
PROPOSED IMPERVIOUS (BUILDING/CONCRETE) = 22,625 SF
PROPOSED IMPERVIOUS (GRAVEL) = 95,394 SF
PROPOSED IMPERVIOUS (DETENTION (±BANK FULL LEVEL) = 22,000 SF
PROPOSED PERVIOUS (GRASS/BRUSH/OPEN) = 118,041 SF

TOTAL AREA: 5.92 ACRES
CURVE NUMBER (OVERALL): 82.88 (SEE W1 AND BELOW FOR BREAK DOWN)

DRAINAGE AREAS TO DETENTION AREA WITH CURVE NUMBER SUMMARY:

1. 23,875 SF = 0.55 AC.
   18,470 SF GRASS (SOIL GOOD 'C'-74)
   5,405 SF IMPERVIOUS (SOIL 'C'-98)
2. 21,774 SF = 0.50 AC.
   14,947 SF GRASS (SOIL GOOD 'C'-74)
   6,827 SF IMPERVIOUS (SOIL 'C'-98)
3. 58,512 SF = 1.34 AC.
   778 SF GRASS (SOIL GOOD 'C'-74)
   16,409 SF GRASS (SOIL FAIR 'C'-79
   7,261 SF IMPERVIOUS (SOIL 'C'-98)
   34,064 SF GRAVEL (SOIL 'C'-89)
4. 153,899 SF = 3.53 AC.
   16,698 SF GRASS (SOIL GOOD 'C'-74)
   8,580 SF GRASS (SOIL FAIR 'B'-69)
   11,808 SF GRASS (SOIL FAIR 'C'-79)
   3,132 SF IMPERVIOUS (SOIL 'C'-98)
   61,330 SF GRAVEL (SOIL 'C'-89)
   28,382 SF BRUSH (SOIL GOOD 'C'-65)
   1,969 SF BRUSH (SOIL GOOD 'B'-48)
   22,000 SF DETENTION (SOIL 'C'-98)

TOTAL = (CURVE NUMBER*AREA) = 490.93
(AREA = 5.924 ACRE)
CN (AVG.) = 490.93/5.924 ACRE = 82.88

ENGINEER'S CERTIFICATE OF OUTLET

Date: 7-11-19

Development Name: E.T. MacKenzie Co. Office & Shop

City, Village or Township of Scio Section 19

Washtenaw County, Michigan

I hereby certify that the existing drain is the only reasonably achievable stormwater outlet for the proposed stormwater management system and that the existing drain has sufficient capacity to serve as an adequate outlet for the proposed system, without detriment to or diminution of the drainage serve that the existing outlet presently provides.

Signed: _____
Registered Professional Engineer

NOTE: The engineer's certificate must be stamped with the engineer's seal.
The certificate submitted must be the original.
The engineer's certificate should be accompanied by supporting calculations and documentation.

STATE OF MICHIGAN
7-11-19
GREGORY A. PETRU
ENGINEER NO. 50958
LICENSED PROFESSIONAL ENGINEER

SITE ADDRESS: 8197 JACKSON RD., ANN ARBOR, MICHIGAN
PARCEL ID#: H-08-19-275-012

SURVEY BY OTHERS

STATE OF MICHIGAN
GREGORY A. PETRU
ENGINEER NO. 50958
LICENSED PROFESSIONAL ENGINEER

REVISIONS
2-6-19 OWNER REVIEW
2-26-19 SITE PLAN SUBMITTAL
3-25-19 SITE PLAN SUBMITTAL
4-15-19 SITE PLAN SUBMITTAL
7-18-19 SITE PLAN REVISIONS
9-4-19 SITE PLAN REVISIONS
9-16-19 SITE PLAN REVISIONS
10-24-19 SITE PLAN REVISIONS

KEBS, INC.
KYES ENGINEERING
BRYAN LAND SURVEYS
2116 HASLETT ROAD, HASLETT, MI 48840
PH. 517-339-1014 FAX. 517-339-8047
Marshall Office
Ph. 269-781-9800

8197 Jackson Road
DRAINMAP - PROPOSED

SCALE: 1"= 40'	DESIGNER: JWK	APPROVED BY: JWK
DATE: 1-28-19	PROJECT MGR. JWK	SHEET D2
AUTHORIZED BY: E.T. MacKENZIE COMPANY		JOB #: 94729

STANDARD METHOD RUNOFF VOLUME WORK SHEETS

W1 Determining Post-Development Cover Types, Areas, Curve Numbers, and Runoff Coefficients

Total Site Area = 5.924 ac
Total Site Area Excluding "Self- Crediting" BMPs = 5.924 ac[A]

Rational Method Variables[B]

IMPERVIOUS (PAVEMENT/BLDG)	C	22,818	0.524	0.95	0.498
GRAVEL	C	95,006	2.18	0.85	1.85
GRASS	B	8,580	0.197	0.25	0.049
DETENTION BASIN	C	23,000	0.505	1.00	0.505
GRASS	C	107,687	2.47	0.30	0.741
GRASS	B	1,969	0.045	0.25	0.011

Total - ∑(C)(Area) = 3.95
Area Total - ∑ac or ∑sf = 5.92
Weighted C - ∑(C)(Area)/∑ac or ∑sf = 0.67

NRCS Variables[C]

GRASS - DEVELOPED CNDD CONDITION	C	50,893	1.168	74	86.43
GRASS - DEVELOPED FAIR CONDITION	C	28,412	0.652	79	51.51
GRASS - FAIR	B	8580	0.197	69	13.59
BRUSH - GOOD	C	29,382	0.692	65	42.38
BRUSH - GOOD	B	1,969	0.045	48	2.16

Total - ∑(CN)(Area) = 196.07
Area Total - ∑ac or ∑sf = 2.714
Weighted CN - ∑(CN)(Area)/∑ac or ∑sf = 72.2

NRCS Variables[C]

DETENTION POND	C	23,000	0.505	98	49.49
PAVING/BLDG	C	22,818	0.524	98	51.35
GRAVEL	C	95006	2.18	89	194.02

[A] Use this area for the remainder of the runoff calculations
[B] Required for first flush runoff calculations
[C] Required for bankfull and 100-year runoff calculations

Total - ∑(CN)(Area) = 294.86
Area Total - ∑ac or ∑sf = 3.309
Weighted CN - ∑(CN)(Area)/∑ac or ∑sf = 91.89

W2 Standard Method Runoff Volume Calculations

First Flush Runoff Calculations (V_{ff})

A.

$V_{ff} = (1")\left(\frac{1'}{12"}\right)\left(\frac{43560\,ft^2}{1ac}\right)AC$ $\quad V_{ff} = (1")\left(\frac{1'}{12"}\right)\left(\frac{43560\,ft^2}{1ac}\right)(5.92)(0.62)$

$V_{ff} = 13324\,ft^3$

A = Total Site Areas (ac) excluding "Self-Crediting" BMPs from Worksheet 1
C= Weighted Runoff Coefficient from Worksheet 1

W3 Standard Method Runoff Volume Calculations

Pre-development Bankfull Runoff Calculations (V_{Bfpre})

A. 2 year/24 hour storm event — P = 2.35in

B. The pre-development land cover will be **Good Cover Woods or Meadow.** Determine the associated soil hydrologic group for the entire site and choose the curve number. CN = 72

C. $S = \frac{1000}{CN} - 10$ $\quad S = \frac{1000}{72} - 10$ $\quad S = 3.89\ in$

D. $Q = \frac{(P-0.2S)^2}{(P+0.8S)}$ $\quad Q = \frac{(2.35-0.2(3.89))^2}{(2.35+0.8(3.89))}$ $\quad Q = 0.45\ in$

E. Total Site Area (sf) excluding "Self- Crediting" BMPs — Area = 258,060 sf

F. $V_{Bf\,pre} = Q(1/12)Area$ $\quad V_{Bf\,pre} = (0.45)(1/12)(258,060)$ $\quad V_{Bf\,pre} = 9,677\ ft^3$

W4 Standard Method Runoff Volume Calculations

Pervious Cover Post-Development Bankfull Runoff Calculations ($V_{Bfperpost}$)

A. 2 year/24 hour storm event — P = 2.35in

B. Pervious Cover CN From Worksheet 1 — CN = 72.2

C. $S = \frac{1000}{CN} - 10$ $\quad S = \frac{1000}{72.2} - 10$ $\quad S = 3.85\ in$

D. $Q = \frac{(P-0.2S)^2}{(P+0.8S)}$ $\quad Q = \frac{(2.35-0.2(3.85))^2}{(2.35+0.8(3.85))}$ $\quad Q = 0.96\ in$

E. Pervious Cover Area from Worksheet 1 — Area = 118,236 sf

F. $V_{Bf\,perpost} = Q(1/12)Area$ $\quad V_{Bf\,perpost} = (0.96)(1/12)(118,236)$ $\quad V_{Bf\,perpost} = 4,532\ ft^3$

W5 Standard Method Runoff Volume Calculations

Impervious Cover Post-Development Bankfull Runoff Calculations ($V_{Bfimppost}$)

A. 2 year/24 hour storm event — P = 2.35in

B. Impervious Cover CN From Worksheet 1 — CN = 91.89

C. $S = \frac{1000}{CN} - 10$ $\quad S = \frac{1000}{91.89} - 10$ $\quad S = 0.88\ in$

D. $Q = \frac{(P-0.2S)^2}{(P+0.8S)}$ $\quad Q = \frac{(2.35-0.2(0.88))^2}{(2.35+0.8(0.88))}$ $\quad Q = 1.55\ in$

E. Impervious Cover Area from Worksheet 1 — Area = 139,824 sf

F. $V_{Bf\,imppost} = Q(1/12)Area$ $\quad V_{Bf\,imppost} = (1.55)(1/12)(139,824)$ $\quad V_{Bf\,imppost} = 18,061\ ft^3$

W6 Standard Method Runoff Volume Calculations

Pervious Cover Post-Development 100-year Storm Runoff Calculations ($V_{100perpost}$)

A. 100-year Storm Event — P = 5.11in

B. Pervious Cover CN From Worksheet 1 — CN = 72.2

C. $S = \frac{1000}{CN} - 10$ $\quad S = \frac{1000}{72.2} - 10$ $\quad S = 3.85\ in$

D. $Q_{100perpre} = \frac{(P-0.2S)^2}{(P+0.8S)}$ $\quad Q_{100perpre} = \frac{(5.11-(0.2)(3.85))^2}{(5.11+0.8(3.85))}$ $\quad Q_{100perpre} = 2.3\ in$

E. Pervious Cover Area from Worksheet 1 — Area = 118,236 sf

F. $V_{100perpre} = Q(1/12)Area$ $\quad V_{100perpre} = (2.30)(1/12)(118,236)$ $\quad V_{100perpre} = 22,662\ ft^3$

W7 Standard Method Runoff Volume Calculations

Impervious Cover Post-Development 100-year Storm Runoff Calculations ($V_{100impost}$)

A. 100-year Storm Event — P = 5.11in

B. Impervious Cover CN From Worksheet 1 — CN = 91.89

C. $S = \frac{1000}{CN} - 10$ $\quad S = \frac{1000}{91.89} - 10$ $\quad S = 0.88\ in$

D. $Q_{100imp} = \frac{(P-0.2S)^2}{(P+0.8S)}$ $\quad Q_{100imp} = \frac{(5.11-(0.2)(0.88))^2}{(5.11+0.8(0.88))}$ $\quad Q_{100imp} = 4.19\ in$

E. AREA Impervious Cover CN From Worksheet 1 — Area = 139,824 sf

F. $V_{100impost} = Q(1/12)Area$ $\quad V_{100impost} = (4.19)(1/12)(139,824)$ $\quad V_{100impost} = 48,822\ ft^3$

W8 Standard Method Runoff Volume Calculations

Determine Time of Concentration for Applicable Flow Types (T_{cmix})

Sheet Flow*	0.48	± 4'	200	2.0%	1.414	0.679	0.08
Waterway	1.2	0.52'	66	0.80%	0.894	1.073	0.017
Waterway	1.2	2'	90	2.2%	1.48	1.78	0.014
Waterway	1.2	8'	350	2.3%	1.52	1.82	0.033
Waterway	1.2	1.5'	120	1.3%	1.14	1.37	0.024
Waterway	1.2	11'	450	2.4%	1.55	1.86	0.067
Waterway	1.2	4.5'	180	2.5%	1.58	1.9	0.026
Waterway	1.2						
Waterway	1.2						
Waterway	1.2						
Waterway	1.2						
Waterway	1.2						
Waterway	1.2						
Waterway	1.2						
Waterway	1.2						
Waterway	1.2						
Waterway	1.2						
Small Tributary	2.1						
Small Tributary	2.1						
Small Tributary	2.1						
Small Tributary	2.1						
Small Tributary	2.1						
Small Tributary	2.1						
Small Tributary	2.1						
Small Tributary	2.1						
Small Tributary	2.1						
Small Tributary	2.1						
Small Tributary	2.1						

* Sheet flow cannot exceed 300 feet. Anything beyond this is considered waterway.

Total Time of Concentration (T_{cmix}) = 0.28 hr's

W9 Standard Method Runoff Volume Calculations

Runoff Summary & Onsite Infiltration Requirement

A. Runoff Summary from Previous Worksheets

First Flush Volume (V_{ff})	13324 ft³
Pre-Development Bankfull Runoff Volume (V_{Bfpre})	9677 ft³
Pervious Cover Post-Development Bankfull Volume ($V_{Bfperpost}$)	4532 ft³
Impervious Cover Post-Development Bankfull Volume ($V_{Bfimppost}$)	18061 ft³
Total BF Volume ($V_{Bf-post}$)	22593 ft³
Pervious Cover Post-Development 100-year Volume ($V_{100perpost}$)	22662 ft³
Impervious Cover Post-Development 100-year Volume ($V_{100impost}$)	48822 ft³
Total 100-year Volume (V_{100})	71484 ft³

B. Determine Onsite Infiltration Requirement

Subtract the Pre-Development Bankfull from the Post-Development Bankfull volume

Total Post-Development Bankfull Volume (V_{Bfpost})	22593 ft³
Pre-Development Bankfull Runoff Volume (V_{Bfpre})	9677 ft³
Bankfull Volume Difference	12916 ft³

Compare the Bankfull Volume Difference with the First Flush Volume. The ***greater*** of the two is the Onsite Infiltration Requirement.

Onsite Infiltration Requirement (V_{inf})	13324 ft³

W10 Standard Method Runoff Volume Calculations

Detention/Retention Requirement

Detention

A. $Q_t = 238.6\,T_c^{0.62}$ $\quad Q_t = 238.6\,(0.28)^{0.62}$ $\quad Q_t = 0.678\ cfs/in-mi^2$ — Peak of the Unit Hydrograph

B. *Total Site Area (ac) excluding "Self-Crediting" BMPs* — Area = 5.92 ac

C. $Q_{100} = Q_{100perpre} + Q_{100ims}$ $\quad Q_{100} = 2.30 + 4.19$ $\quad Q_{100} = 6.49\ in$ — Note: Q_{100ims} and Q_{100imp} from W6 and W7, respectively

D. Peak Flow (PF) = $\frac{Q_{P\left(\frac{cfs}{(sq\,mi)(in)}\right)} X_{100(in)} Area(ac)}{640}$ $\quad PF = \frac{(0.678)(6.49)(5.92)}{640}$ $\quad PF = 40.7\ cfs$

E. Δ = PF (cfs) - 0.15 Area(ac) $\quad \Delta = (40.7) - 0.15(5.92)$ $\quad \Delta = 39.81\ cfs$

F. $V_{tot} = \frac{\Delta(cfs)}{PF\,(cfs)} V_{100}\,(ft^3)$ $\quad V_{tot} = \frac{39.81}{40.7}(71484)$ $\quad V_{tot} = 69921\ ft^3$

V_{tot} = Calculated Detention (ft³), not including volume reduction credit for infiltration or penalty

Note: Projects/sites where the required infiltration volume cannot be achieved must increase the required detention volume by up to an additional 20%.

Retention

A. $V_{tot} = 2(V_{100})$ $\quad V_{tot} = 2(71484)$ $\quad V_{tot} = 142968\ ft^3$

W11 Standard Method Runoff Volume Calculations

Determine Applicable BMPs and Associated Volume Credits

Proposed BMPs	Applicable?	Total Volume Reduction Credit (ft³)	Infiltration Volume Credit (ft³)	Total Volume Credit (ft³)
Pervious Pavement w/Infiltration Bed				
Infiltration Basin				
Subsurface Infiltration Bed				
Infiltration Trench				
Bioretention Systems				
Rain Gardens				
Dry Well				
Bioswale				
Vegetated Filter Strip				
Green Roof				

Total Volume Reduction Credit by Proposed Structural BMPs (ft³) = 0
Runoff Volume Infiltration Requirement (V_{inf}) from Worksheet 9 - 13324
Runoff Volume Credit (ft³) = 0

[A] Complete checklist from Section VI for each Structural BMP type
[B] Storage volume as defined in individual BMP write-ups
[C] Approximated as the average design infiltration rate over 8 hours multiplied by the BMP area:
Infiltration Rate x 8 hours x BMP Area x Unit Conversions = Infiltration Volume (ft³)
[D] Total Volume Reduction Credit is the sum of the Storage Volume and the Infiltration Volume During Storm

W12 Natural Features Inventory

1. Provide Natural Resources Map. This map should identify waterbodies, floodplains, riparian areas, wetlands, woodlands, natural drainage ways, steep slopes and other natural features.
2. Summarize the existing extent of each natural resource in the Existing Natural Resources Table.
3. Summarize total proposed Protected/Undisturbed Area.
4. Do not count any area twice. For example, an area that is both a floodplain and a wetland may only be considered once (include as either floodplain or wetland, not both).

Existing Natural Resources	Verified (Yes/No)	Total Area (ac)	Protected/Undisturbed Area (ac)
Waterbodies	N/A		
Floodplains			
Riparian Areas			
Wetlands			
Woodlands			
Natural Drainage Area			
Steep Slopes, 15%-25%			
Steep Slopes, over 25%			
Special Habitat Areas			
Other			
TOTAL EXISTING (ac)		0	

W13 Summary

Site Summary of Infiltration & Detention

A. Stormwater Management Summary

Minimum Onsite Infiltration Requirement, V_{inf}	13324 ft³
Designed/Provided Infiltration Volume	0 ft³
% Minimum Required Infiltration Provided	0 %
Total Calculated Detention Volume, V_{det}	69921 ft³
Net Required Detention Volume (V_{det} - Designed/Provided Infiltration Volume)	69921 ft³

B. Detention Volume Increase for sites where the required infiltration volume cannot be achieved

% Required Infiltration NOT provided (*100% - % Minimum Required Infiltration Provided*)	100 %
Net % Penalty (*20% x % Required Infiltration NOT Provided*)	20 %
Total Required Detention Volume, including penalty {(100% + Net % Penalty) x Net Required Detention Volume)}	83905 ft³

KEBS, INC.

JOB 8197 JACKSON ROAD
SHEET NO. ____ OF ____
CALCULATED BY ____ DATE ____
CHECKED BY ____ DATE ____
SCALE ____ DATE ____

STORM WATER DETENTION VOLUME

ELEVATION	AREA		VOLUME
889.10	0	>	3438 CFT
890.00	11,402 SF	>	19,389
891.00	27,376	>	29,486
892.00	31,596	>	33,792
893.00	35,988		

TOTAL = 86,105 CFT

→ FROM WORKSHEET (W13), REQUIRED IS 83,905 CFT (OK)
→ FROM WORKSHEET (W9), FIRST FLUSH VOLUME REQUIRED = 13,324 CFT
→ FROM WORKSHEET (W9), BANK FULL VOLUME REQUIRED = 22,593 CFT

FIRST FLUSH ELEVATION = $890 + \frac{13324-3438}{19,389} = 890.51$

BANK FULL ELEVATION = $890 + \frac{22593-3438}{19389} = 890.99$

100-YEAR ELEVATION = $892 + \left[\frac{83905-33792-19389-29486}{33792}\right] = 892.93$

→ USE ELEVATIONS TO DESIGN OUTLET STRUCTURE, SEE ATTACHED SPREADSHEETS FOR HOLE DESIGN.

SEDIMENT BASIN FOREBAY

→ PROVIDE 5% OF THE 100-YEAR VOLUME = 0.05(83905) = 4195 CFT *

* From 890-892.5 FOREBAY VOLUME PROVIDED = 7,223 CFT OK

OUTLET STRUCTURE

First Flush Volume

The first flush storm is defined as the first 1" of rain over the entire watershed:

$V_{ff} = (1")\left(\frac{1'}{12"}\right)\left(\frac{43560\,ft^2}{1ac}\right)AC$
$V_{ff} = [(1")\left(\frac{1'}{12"}\right)\left(\frac{43560\,ft^2}{1ac}\right)](5.92)(0.62) = (3630)(5.92)(0.62)$
$V_{ff} = 13324\ ft^3$

First flush of runoff:

The average allowable release rate for runoff resulting from 1" of rain over watershed area in 24 hours:

$Q_{ff} = \frac{V_{ff}}{T_{24}}$
$Q_{ff} = \frac{13324\ ft^3}{(24hr)(3600sec/hr)}$
$Q_{ff} = 0.154\ cfs$

Place openings in standpipe at bottom of basin: 889.10

To determine the appropriate size orifice to release the first flush volume, an average head value can be used in the orifice equation. If the basin is designed to be trapezoidal in shape, 2/3 of the total head is an acceptable approximation for the average head.

$h_{ave} = \frac{2}{3}(elev_{ff} - elev_{bot})$
$h_{ave} = \frac{2}{3}(890.51 - 889.10)$
$h_{ave} = 0.94\ ft$
$A = \frac{Q_{ff}}{0.62\sqrt{2gh_{ave}}}$
$A = \frac{0.154\ cfs}{0.62\sqrt{[2(32.2ft/sec^2)(0.94\ ft)]}}$
$A = 0.032\ ft^2$

The number and size of orifices to meet the area requirements is variable. In general larger holes are preferable, although multiple outlets should be used if possible. For this project, we will choose a 0.75 " diameter orifice (which has an area of: 0.0031 (ft²)

= $\frac{0.032\ ft^2}{0.0031\ ft^2}$
= 10.31
Therefore, use 10 - 0.75 " diameter holes @ elev. 889.10 for first flush of runoff.

The detention time for 10 - 0.75 " diameter holes:

$Q_{ff}^{new} = A_{ff}^{new}(0.62)\sqrt{2gh_{ave}}$
$Q_{ff}^{new} = 0.0031\ ft^2(10)(0.62)\sqrt{[2(32.2ft/sec^2)(0.94\ ft)]}$
$Q_{ff}^{new} = 0.1495\ cfs$
$T_{ff}^{new} = \frac{V_{ff}}{Q_{ff}^{new}}$
$T_{ff}^{new} = \frac{13324\ ft^3}{0.1495\ cfs\ (3600sec/hr)}$
$T_{ff}^{new} = 24.7\ hr$ — Ok, 24 hours minimum required

Bankfull Flood Volume:

The bankfull storm is defined as the 24 hour, 2-year storm event:

$V_{bf} =$ (SEE WORKSHEET W9)
$V_{bf} =$
$V_{bf} = 22593\ ft^3$ (SEE WORKSHEET W9)

The bankfull flood must be detained 36-48 hours; check the discharge through the first flush orifice to see if additional holes are necessar

$h_{ave} = \frac{2}{3}(elev_{bf} - elev_{bot})$
$h_{ave} = \frac{2}{3}(890.99 - 889.10)$
$h_{ave} = 1.26\ ft$
$Q = A_{ff} * (0.62) * sqrt(2gh_{ave})$
$Q = 0.0031\ ft^2 * (10)(0.62) * sqrt[2(32.2ft/sec^2)(1.26\ ft)]$
$Qff = 0.1731\ cfs$
$T = \frac{V_{bf}}{Q}$
$T = \frac{22593\ ft^3}{0.1731\ cfs\ (3600sec/hr)}$
$T = 36.2\ hr$

Because the holding time exceeds 48 hours,... (It is ok, no additional holes needed)

$V_{min} = V_{bf} - V_{ff}$
$V_{rem} = 9,269$ cft
$T_{rem} = T_{bf} - T_{ff}^{new}$
$T_{rem} = 15.3$ hrs

Volume through 10 - 2 " diameter holes:

$h_{ave,tf} = (2/3) * (elev_{bf} - elev_{ff}) + (elev_{ff} - elev_{bot})$
$h_{ave,tf} = 1.2600$ ft

Q1 will be defined as the discharge through the tf orifices when both the ff and tf holes are contributin.

$Q_1 = 0.62 * A_{ff} * sqrt[2 * (32.2ft/sec^2) * h_{ave,tf}]$
$Q_1 = 0.1731$ cfs
$V_1 = T_{min} * Q_1 * 3600$ sec/hr
$V_1 = 9,506$ cft

The leftov

$V_2 = V_{min} - V_1$
$V_2 = -236$ cft
$Q_2 = V_2 / (T_{min} * 3600$ sec/hr)
$Q_2 = 0.00$ cfs
$h_{ave,bf} = 2/3(elev\ bf - elev\ ff)$
$h_{ave,bf} = 0.32$ ft
$A_0 = Q_2 / (0.62 * sqrt(2 * g * h_{ave,bf}))$
$A_2 = 0.00$ sf

The number and size of orifices to meet the area requirements is variable. In general larger holes are preferable, although multiple outlets should be used if possible. For this project, we will choose a 2 " diameter orifice (which has an area of: 0.0218 (ft²)

# of holes= A_2 / Area of 2 " orifice
# of holes= -0.07

Therefore, use 0 - 2 " Diameter Holes @ elev. 890.51 for the bankfull flood

100 year flood:

$Q_a = A \times 0.15$ USE 0.15 CFS/ACRE
$Q_a = 0.89$ cfs

Qa is the total allowable flow. Calculate the maximum flow passing through the first flush and bankfull orifices, using the total head, and subtract from Qa to determine

h_{tot} (elev.100-year - elev.bot) 3.83 ft
$h_{tot,ff}$ (elev.100-year - elev.ff) 2.42 ft

$Q_{ff} + Q_{bf} = 0.62 * A_{ff} * sqrt(2 * g * h_{tot}) + 0.62 * A_{ff} * sqrt(2 * g * h_{tot,bf})$
$Q_{ff} + Q_{bf} = 0.30$ cfs

$Q_{100} = Qa - (Qff + Qbf)$
$Q_{100} = 0.59$ cfs

$A_{100} = Q100 / 0.62 * sqrt(2 * g * h100)$
$A_{100} = 0.08\ ft^2$

The number and size of orifices to meet the area requirements is variable. In general larger holes are preferable, although multiple outlets should be used if possible. For this project, we will choose a 2.25 " diameter orifice (which has an area of: 0.0276 (ft²)

# of 2.25 " 100-year flood holes = A100/area of Hole
# of 2.25 " 100-year flood holes = 3.07

Therefore, use 3 - 2.25 " Diameter holes @ elev. 890.99 for the 100-year flood

SURVEY BY OTHERS

STATE OF MICHIGAN — LICENSED PROFESSIONAL ENGINEER
GREGORY A. PETRU
ENGINEER NO. 50958

REVISIONS
2-6-19 OWNER REVIEW
2-26-19 SITE PLAN SUBMITTAL
3-25-19 SITE PLAN SUBMITTAL
4-15-19 SITE PLAN SUBMITTAL
7-18-19 SITE PLAN REVISIONS
9-16-19 SITE PLAN REVISIONS
10-24-19 SITE PLAN REVISIONS

KEBS, INC.
KYES ENGINEERING
BRYAN LAND SURVEYS
2116 HASLETT ROAD, HASLETT, MI 48840
PH. 517-339-1014 FAX. 517-339-8047
Marshall Office
Ph. 269-781-9800

8197 Jackson Road
DRAIN CALCULATIONS

SCALE: 1"= 40'	DESIGNER: JWK	APPROVED BY: JWK
DATE: 1-28-19	PROJECT MGR. JWK	SHEET D3
AUTHORIZED BY: E.T. MacKENZIE COMPANY		JOB #: 94729

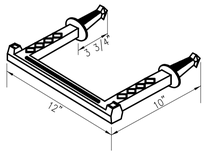

MANHOLE STEP
M.A. PSI-375

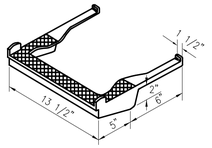

STANDARD MANHOLE STEP
E.J.I.W. 8502

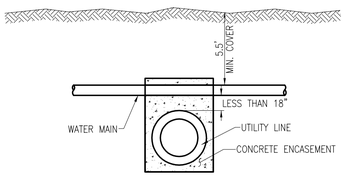

UTILITY CROSSING WITH LESS THAN 18" CLEARANCE

NOTE:
WHERE CONCRETE ENCASEMENT IS SPECIFIED FOR NEW UTILITY A 6" MINIMUM LAYER OF MECHANICALLY COMPACTED SAND SHALL BE MAINTAINED BETWEEN EX. UTILITY & TOP OF CONCRETE ENCASEMENT

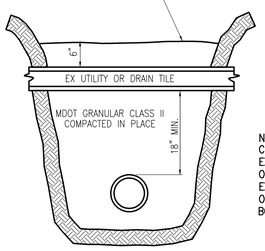

NOTE:
COMPACTED SAND SHALL EXTEND FOR 9" EACH SIDE OF EXISTING PIPE, AT 6" ABOVE EXISTING PIPE & SHALL SLOPE OUT AT A 1:1 (45°) SLOPE TO THE BOTTOM OF THE TRENCH

STANDARD PIPE SUPPORT

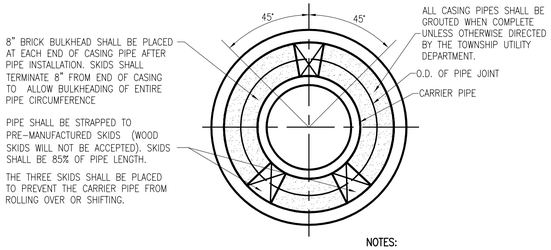

DIA. OF CARRIER PIPE "A"	MIN. (I.D.) "A"	ROAD CROSSING MIN."B"	RAILROAD CROSSING MIN."B"
6"	16"	.312	.312
8"	16"	.312	.375
12"	20"	.312	.438
16"	24"	.375	.500
20"	30"	.375	.500
24"	36"	.375	.500

A=INSIDE DIAMETER
B=WALL THICKNESS

4" MINIMUM CLEARANCE BETWEEN MAX. O.D. AT A JOINT OF THE PIPE AND THE I.D. OF THE CASING PIPE FOR THE TOP 90° OF THE CASING

NOTES:
DETAILS ARE TYPICAL FOR WATER PIPE CONSTRUCTED IN CASING PIPE

THE CONTRACTOR SHALL SUBMIT IN WRITING THE DETAILS OF THE APPROPRIATE PIPE CASING INSTALLATION FOR THE REVIEW AND APPROVAL BY THE ENGINEER BEFORE INSTALLATION OF ANY CASING STARTS

CASING SHALL BE SPIRAL WELDED STEEL PIPE A.S.T.M. A-252, GR. 2.

ALL CASING PIPE JOINTS SHALL BE FULLY WELDED

PIPE BARREL SUPPORT FOR WATER MAIN CONSTRUCTED IN CASING PIPE

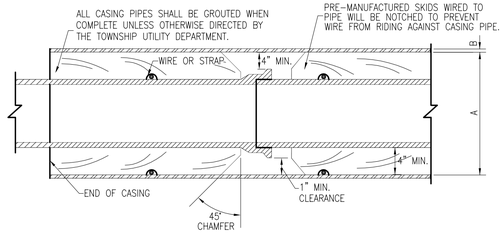

STANDARD CASING SECTION

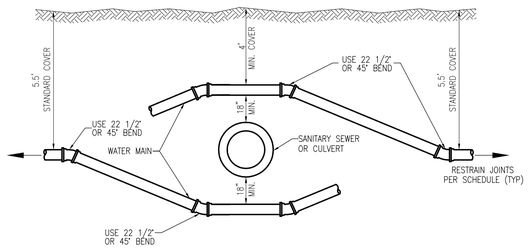

SEWER OR CULVERT CROSSING

NOTE:
BENDS CAN BE ELIMINATED FOR MINOR VERTICAL DEFLECTIONS IN DUCTILE IRON PIPE (1' OR LESS). IN THIS CASE, THE PIPE MAY BE DEFLECTED UP TO 4' PER JOINT.

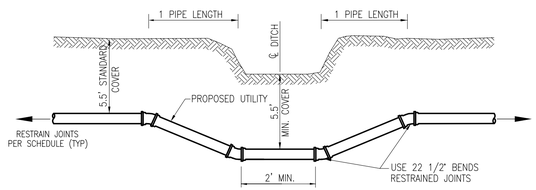

DITCH OR STREAM CROSSING

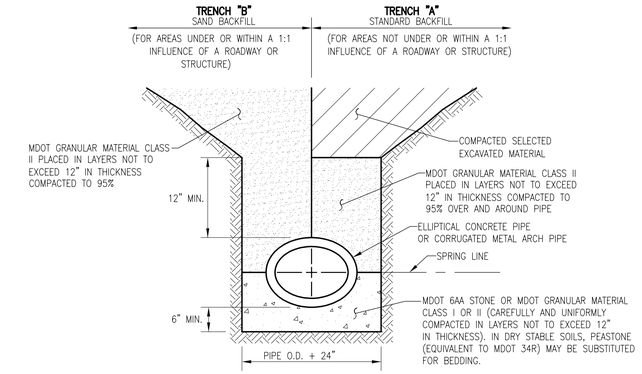

ELLIPTICAL CONCRETE PIPE OR CORRUGATED METAL ARCH PIPE

NOTES:
THE MAXIMUM PARTICLE SIZE ALLOWED IN THE EMBEDMENT ZONE IS 1.5 INCHES.

THERE SHALL BE NO DEBRIS, FROZEN MATERIAL, OR ORGANIC MATERIAL WITHIN 2 FEET OF THE TOP OF THE PIPE.

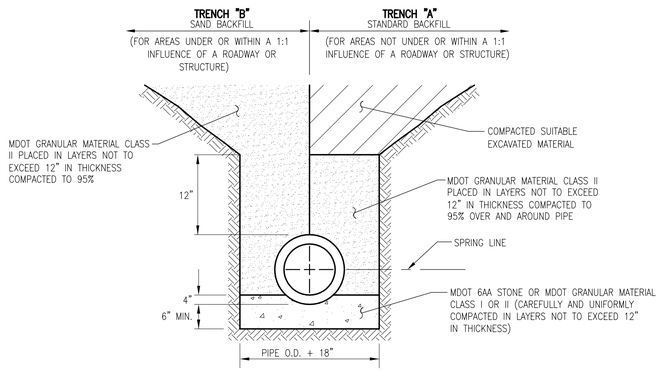

24" DIAMETER AND SMALLER PIPE (CONCRETE AND METAL PIPE)

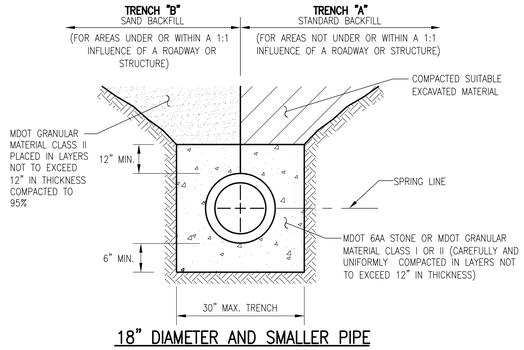

18" DIAMETER AND SMALLER PIPE (PVC PIPE)

NOTES:
THE MAXIMUM PARTICLE SIZE ALLOWED IN THE EMBEDMENT ZONE IS 1.5 INCHES.

THERE SHALL BE NO DEBRIS, FROZEN MATERIAL, OR ORGANIC MATERIAL WITHIN 2 FEET OF THE TOP OF THE PIPE.

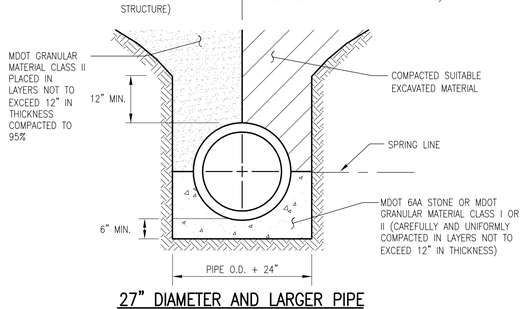

27" DIAMETER AND LARGER PIPE (CONCRETE AND METAL PIPE)

OHM
VERT DATUM ####
HORZ DATUM ####
SCALE H: 1"=40' V: 1"=4'
JOB # ####
CITY/VILLAGE/TOWNSHIP #####
COUNTY #####
TOWN ####
RANGE ####
SECTION ####
PROJ MGR ####
ENGINEER ####
CADD ####
BID DATE ####
DATE
REVISIONS:
DATE:
REVISIONS:
DATE:
REVISIONS:
DATE:
CLIENT: ####
34000 Plymouth Road | Livonia, MI 48150 | P (734) 522-6711 | F (734) 522-6427 | WWW.OHM-ADVISORS.COM
COPYRIGHT 2007 OHM ALL DRAWINGS AND WRITTEN MATERIALS APPEARING HEREIN CONSTITUTE THE ORIGINAL AND UNPUBLISHED WORK OF OHM AND THE SAME MAY NOT BE DUPLICATED, DISTRIBUTED, OR DISCLOSED WITHOUT PRIOR WRITTEN CONSENT OF OHM

SCIO TOWNSHIP
GENERAL DETAILS

SHEET
#####
OF ####

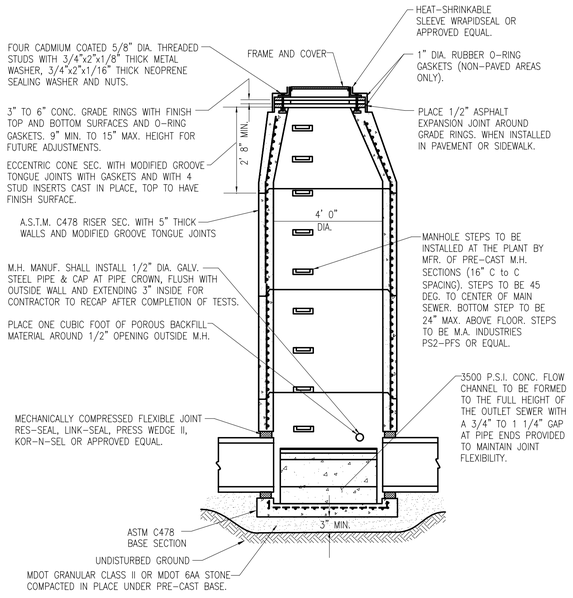

STANDARD MANHOLE
8" DIAMETER THROUGH 21" DIAMETER PIPE

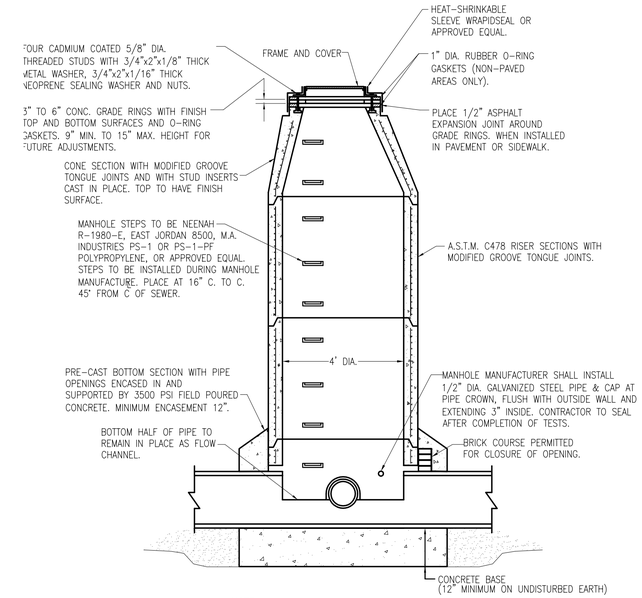

NOTE:
FOR LOCAL SANITARY SEWER EXTENSIONS CONNECTING DIRECTLY OR INDIRECTLY TO SCIO TOWNSHIP PUBLIC WORKS

MANHOLE CONSTRUCTED OVER EXISTING SEWER

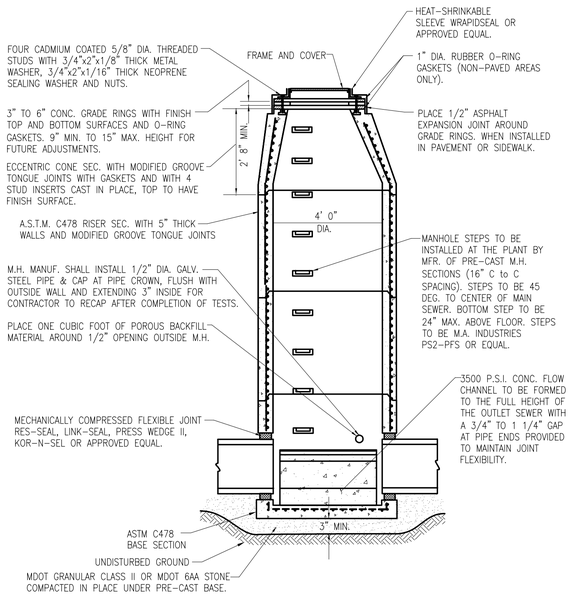

STANDARD MONITORING MANHOLE
6" DIAMETER PIPE OR SMALLER

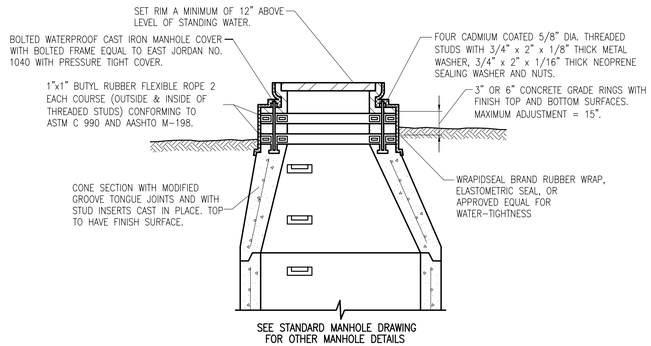

SEE STANDARD MANHOLE DRAWING FOR OTHER MANHOLE DETAILS

MANHOLE TOP WITHIN FLOOD PRONE AREA

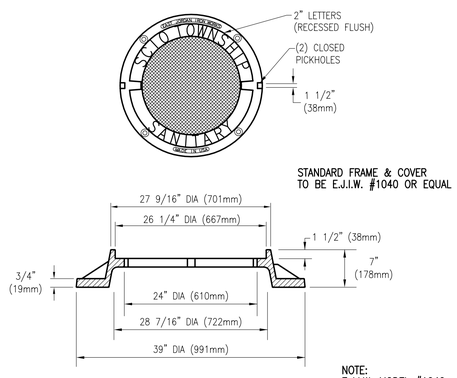

NOTE:
E.J.I.W. MODEL #1040

MANHOLE FRAME AND COVER

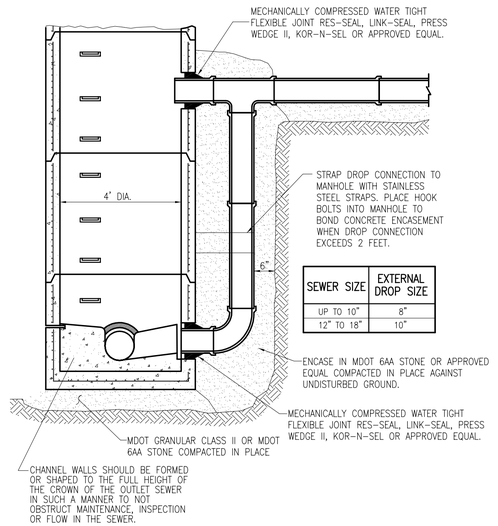

SEWER SIZE	EXTERNAL DROP SIZE
UP TO 10"	8"
12" TO 18"	10"

EXTERNAL DROP CONNECTION

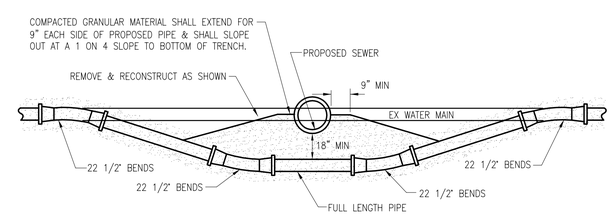

UTILITY RELOCATION

DRAWING PATH: S:\CVTSsdoTwp\Standards\CADD\STD_SAN\SAN DETAILS.DWG May 29, 2007 - 3:20pm

54

OHM

VERT DATUM	####
HORZ DATUM	####
SCALE	H: 1"=40' V: 1"=4'
JOB #	####
CITY/VILLAGE/TOWNSHIP	####
COUNTY	####
DATE	
BID DATE	####
CADD	####
ENGINEER	####
PROJ MGR	####
SECTION	####
TOWN	####
RANGE	####
CLIENT:	####
REVISIONS:	
DATE:	

34000 Plymouth Road | Livonia, MI 48150 | P (734) 522-6711 | F (734) 522-6427 | WWW.OHM-ADVISORS.COM

COPYRIGHT 2007 OHM ALL DRAWINGS AND WRITTEN MATERIALS APPEARING HEREIN CONSTITUTE THE ORIGINAL AND UNPUBLISHED WORK OF OHM AND THE SAME MAY NOT BE DUPLICATED, DISTRIBUTED, OR DISCLOSED WITHOUT PRIOR WRITTEN CONSENT OF OHM

SCIO TOWNSHIP
SANITARY DETAILS

SHEET
#####
OF #####

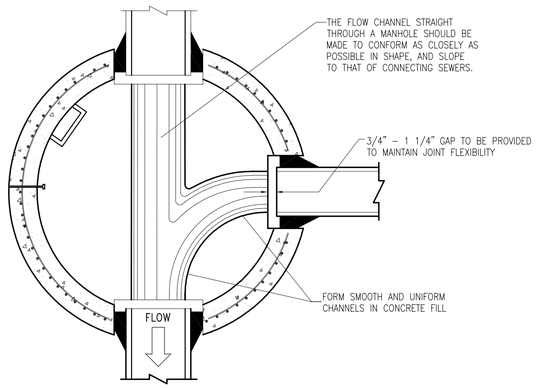

FLOW LINE

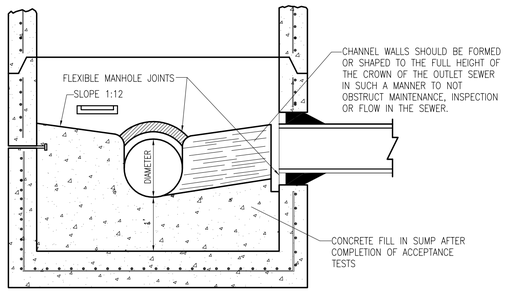

MANHOLE FLOW CHANNEL

NOTE:
PROVIDE EXPANSION JOINT
AROUND PERIMETER

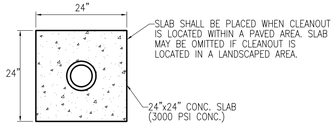

TOP VIEW

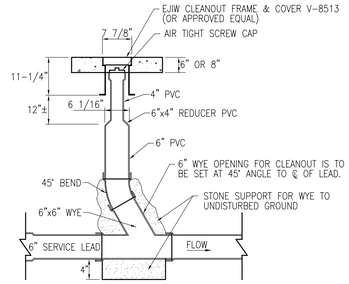

ELEVATION

SANITARY SEWER CLEANOUT

NOTE:
IN THE EVENT THAT OTHER UTILITIES ARE TO BE INSTALLED IN THE EASEMENT ADJACENT TO THE THE PROPERTY LINE, THE SEWER LEAD SHALL BE EXTENDED A SUFFICIENT DISTANCE BEYOND THE OTHER UTILITIES.

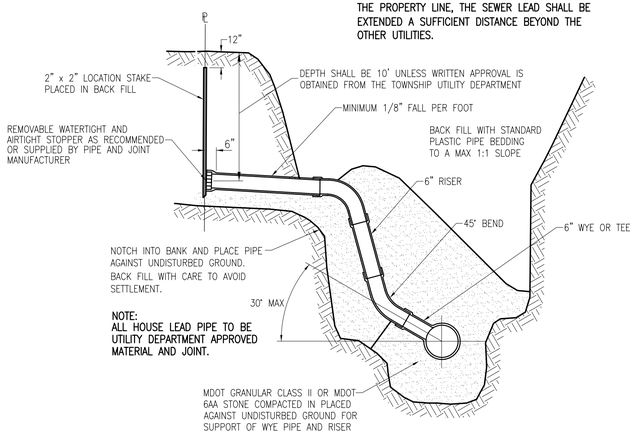

HOUSE SERVICE LEAD CONNECTION

NOTE:
CONTRACTOR SHALL EXCAVATE ON
BOTH SIDES OF SANITARY SEWER TO
EQUALIZE PRESSURE IF SO
DIRECTED BY THE ENGINEER.

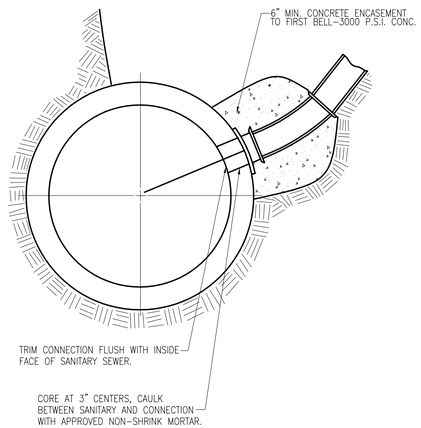

SADDLE CONNECTION

SCIO TOWNSHIP
STANDARD SANITARY SEWER CONSTRUCTION NOTES

1. ALL CONSTRUCTION PROCEDURES AND MATERIALS USED ON ALL SANITARY SEWER PROJECTS SHALL CONFORM TO THE CURRENT SCIO TOWNSHIP ENGINEERING STANDARDS AND DESIGN SPECIFICATIONS MANUAL.
2. ALL MANHOLE RIMS SHALL BE SET TO GRADE AS FURNISHED BY THE ENGINEER.
3. RISERS ON SANITARY SEWERS LEADS SHALL BE INSTALLED WHERE SEWER IS MORE THAN 10 FEET DEEP IN ORDER TO ACHIEVE A LEAD DEPTH OF 10 FEET.
4. PLACE ONE 6 INCH WYE FOR EACH LOT ON SANITARY SEWERS UNLESS OTHERWISE SPECIFIED.
5. ALL MANHOLES SHALL USE ECCENTRIC CONES PLACED TOWARD THE PROPERTY LINE UNLESS OTHERWISE SPECIFIED.
6. INFILTRATION FOR ANY SECTION OF SEWERS BETWEEN MANHOLES SHALL NOT EXCEED 100 GALLONS PER INCH IN DIAMETER PER MILE OF SEWER PER 24 HOURS.
7. NO FOOTING OR ROOF DRAINS SHALL BE CONNECTED TO THE PROPOSED SEWER.
8. NO CONNECTION RECEIVING STORM WATER, SURFACE WATER, OR GROUND WATER SHALL BE MADE TO SANITARY SEWERS.
9. ALL SEWERS SHALL BE SUBJECT TO INFILTRATION, EXFILTRATION, OR LOW-PRESSURE AIR TESTS, OR A COMBINATION THEREOF, PRIOR TO FINAL ACCEPTANCE BY THE TOWNSHIP. ALL SEWERS OVER 24 INCH DIAMETER SHALL BE SUBJECTED TO INFILTRATION TESTS. ALL SEWERS OF 24 INCH DIAMETER OR SMALLER, WHERE THE GROUND WATER LEVEL ABOVE THE TOP OF THE SEWER IS OVER 2 FEET, SHALL BE SUBJECTED TO INFILTRATION TESTS. ALL SEWERS OF 24 INCH DIAMETER OR LESS, WHERE THE GROUND WATER LEVEL ABOVE THE TOP OF THE SEWER IS 2 FEET OR LESS, SHALL BE SUBJECTED TO A LOW-PRESSURE AIR TEST, OR EXFILTRATION TEST WHERE APPROVED BY THE ENGINEER.
10. ALL PVC AND ABS PLASTIC SEWERS SHALL BE SUBJECTED TO DEFLECTION TESTING BY MEANS OF A NINE-POINT DEFLECTION TEST MANDREL, PULLED MANUALLY (BY HAND). THE MAXIMUM ALLOWED DEFLECTION SHALL BE 5%.
11. ALL SEWERS 36 INCH DIAMETER AND SMALLER SHALL BE VIDEOTAPED, WITH TEST RESULTS APPROVED BY THE TOWNSHIP UTILITY DEPARTMENT PRIOR TO PLACING THE SEWER IN SERVICE. WATER SHALL BE PLACED IN THE SEWER AT ALL UPSTREAM MANHOLES PRIOR TO VIDEOTAPING AS DIRECTED BY THE ENGINEER.
12. ALL SEWER SYSTEM CONSTRUCTION SHALL CONFORM TO THE CURRENT STANDARDS AND GENERAL SPECIFICATIONS OF SCIO TOWNSHIP AND ANY OTHER AGENCY HAVING JURISDICTION OVER THE CONSTRUCTION AREA.
13. ALL STUBS SHALL HAVE A WATER AND AIR TIGHT BULKHEAD.
14. NO SEWER SHALL BE CONSTRUCTED LESS THAN 8 INCH IN DIAMETER.
15. THE MINIMUM DEPTH TO TOP OF PIPE SHALL BE 5 FEET.
16. PIPE BEDDING MATERIAL SHALL BE COMPACTED TO 95% OF MAXIMUM DRY DENSITY.
17. THE MAXIMUM DEPTH TO INVERT OF ANY SANITARY SEWER SHALL NOT EXCEED THE DEPTH RECOMMENDED BY THE PIPE MANUFACTURER FOR EACH SIZE AND CLASS OF PIPE.

SANITARY SEWER MATERIALS

18. PLASTIC SANITARY SEWERS SHALL BE EITHER PVC SDR 26 (MINIMUM) (ASTM D-3034) OR PVC/ABS TRUSS PIPE AS MANUFACTURED BY CONTECH CONSTRUCTION PRODUCTS OR EQUAL (ASTM D-2680). ALL WYES, RISERS AND BUILDING SERVICE LEADS SHALL BE 6" PVC SDR 26 (ASTM D-3034). REINFORCED CONCRETE SEWER PIPE SHALL CONFORM TO ASTM C-76. DUCTILE IRON SANITARY SEWER SHALL MEET THE REQUIREMENTS OF ANSI/AWWA C151/A21.51 CLASS 52. WHERE THE SCIO TOWNSHIP SPECIFICATIONS DIFFER WITH ANSI/AWWA C151/A21.51, THE SPECIFICATIONS WILL PREVAIL.
19. FORCE MAIN PIPE SHALL BE DUCTILE IRON PIPE CONFORMING TO THE SCIO TOWNSHIP WATER MAIN STANDARDS OR PVC SDR 11 (MINIMUM) PRESSURE PIPE CONFORMING TO ASTM D-3034
20. JOINTS FOR PVC PIPE SHALL BE PUSH-ON TYPE (ASTM D-3212) OR SOLVENT-CEMENTED JOINTS (ASTM D-2680) IN SPECIAL APPLICATIONS AS SPECIFIED BY THE TOWNSHIP ENGINEER. JOINTS FOR ABS TRUSS PIPE SHALL CONSIST OF ABS COUPLINGS CHEMICALLY CEMENTED TO THE ENDS OF THE PIPE BEING CONNECTED. SOLVENTS AND METHODS SHALL CONFORM TO ASTM D-2680. MODIFIED GROOVED TONGUE (MGT) JOINTS FOR CONCRETE PIPE SHALL HAVE A RUBBER GASKET SNAPPED INTO A GROOVE CAST IN TO THE TONGUE. RUBBER GASKET JOINTS FOR CONCRETE PIPE SHALL BE IN ACCORDANCE WITH ASTM 443 SPECIFICATION. THE JOINTS SHALL BE LUBRICATED AND COUPLED IN ACCORDANCE WITH THE PIPE MANUFACTURER'S PRINTED INSTRUCTIONS.
21. FOR DUCTILE IRON PIPE, THE BELL OF EACH PIPE SHALL PROVIDE FOR THE SEATING OF A RUBBER GASKET SUITABLE FOR USE WITH SANITARY SEWAGE. SUFFICIENT NON-TOXIC LUBRICANT SHALL BE APPLIED AND SHALL HAVE NO DELETERIOUS EFFECT ON THE RUBBER GASKET.
22. MANHOLES SHALL BE PRE-CAST AND SHALL CONFORM TO ASTM C478, LATEST REVISION. FRAME AND CHIMNEY SECTIONS OF ALL SANITARY MANHOLES SHALL BE WRAPPED WITH WRAPIDSEAL HEAT-SHRINKABLE WRAP PRODUCED BY CANUSA-CPS OR APPROVED EQUAL.
23. FRAMES AND COVERS SHALL BE WATERPROOF, CAST IRON COVERS EQUAL TO EAST JORDAN IRON WORKS NO. 1040AGS HEAVY DUTY OR APPROVED EQUAL. BOLT DOWN COVERS (ONLY AS APPROVED BY TOWNSHIP UTILITIES DEPARTMENT) SHALL BE BOLTED DOWN WITH FOUR (4) CADMIUM COATED 5/8 INCH DIAMETER THREADED STUDS WITH 3/4" X 2" X 1/8" THICK, METAL WASHERS AND 3/4" X 2" X 1/16" THICK NEOPRENE SEALING WASHERS AND NUTS.

OHM

DATE | BID DATE #### | CADD #### | ENGINEER #### | PROJ MGR #### | SECTION #### | TOWN #### | RANGE #### | COUNTY #### | CITY/VILLAGE/TOWNSHIP #### | SCALE H: 1"=40' V: 1"=4' | HORZ DATUM #### | VERT DATUM ####

CLIENT: ####
JOB # ####

REVISIONS: | DATE:
REVISIONS: | DATE:
REVISIONS: | DATE:

34000 Plymouth Road | Livonia, MI 48150 | P (734) 522-6711 | F (734) 522-6427 | WWW.OHM-ADVISORS.COM

COPYRIGHT 2007 OHM ALL DRAWINGS AND WRITTEN MATERIALS APPEARING HEREIN CONSTITUTE THE ORIGINAL AND UNPUBLISHED WORK OF OHM AND THE SAME MAY NOT BE DUPLICATED, DISTRIBUTED, OR DISCLOSED WITHOUT PRIOR WRITTEN CONSENT OF OHM

SCIO TOWNSHIP
SANITARY DETAILS

SHEET
#####
OF ####

DRAWING PATH: S:\CVT\ScioTwp\Standards\CADD\STD_SAN\SAN DETAILS.DWG May 29, 2007 - 3:19pm

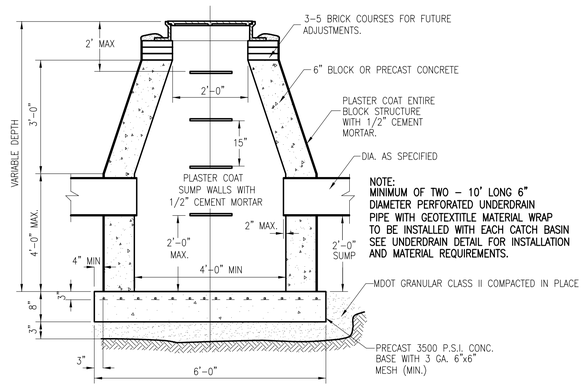

NOTE:
MINIMUM OF TWO - 10' LONG 6" DIAMETER PERFORATED UNDERDRAIN PIPE WITH GEOTEXTITLE MATERIAL WRAP TO BE INSTALLED WITH EACH CATCH BASIN SEE UNDERDRAIN DETAIL FOR INSTALLATION AND MATERIAL REQUIREMENTS.

SHALLOW CATCH BASIN

M.H. STEP SPACING:
CONC. BLK. M.H. ..... 18" CENTERS
PRECAST M.H. ..... 16" CENTERS
TOP STEP TO BE 21" BELOW TOP OF FRAME

MIN. CONE HEIGHTS:
BLOCK CONCENTRIC 3'-0"
PRECAST ECCENTRIC 2'-8" OR 3'-4"

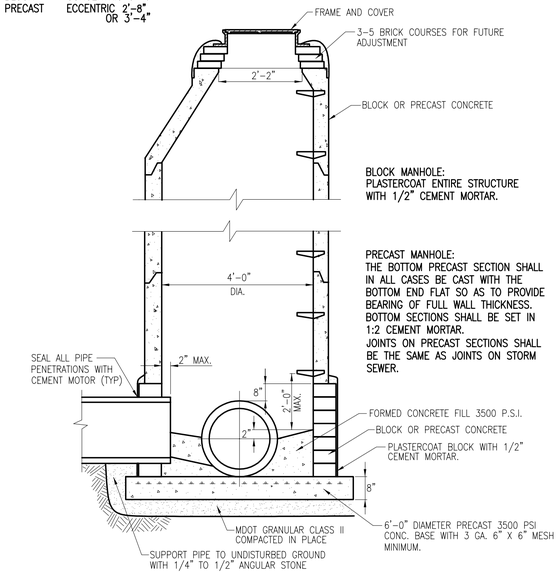

BLOCK MANHOLE:
PLASTERCOAT ENTIRE STRUCTURE WITH 1/2" CEMENT MORTAR.

PRECAST MANHOLE:
THE BOTTOM PRECAST SECTION SHALL IN ALL CASES BE CAST WITH THE BOTTOM END FLAT SO AS TO PROVIDE BEARING OF FULL WALL THICKNESS. BOTTOM SECTIONS SHALL BE SET IN 1:2 CEMENT MORTAR.
JOINTS ON PRECAST SECTIONS SHALL BE THE SAME AS JOINTS ON STORM SEWER.

STANDARD STORM MANHOLE

CONC. BLOCK MANHOLE:
APPROVED CONC. BLOCK
USE 6" OR 8" THICK BLOCK TO 16' DEPTH
USE 12" THICK BLOCK TO 24' DEPTH
16" BLOCK WALL BELOW 24' DEPTH

PRECAST MANHOLE:
C-478 UP TO 32' DEPTH
WITH 5" THICK WALL.

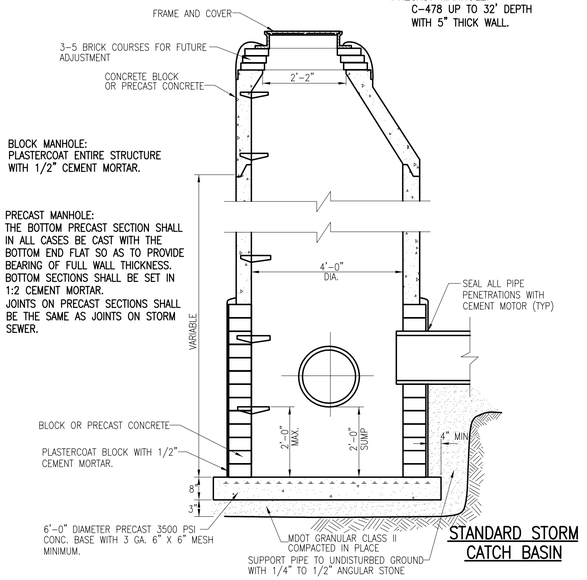

STANDARD STORM CATCH BASIN

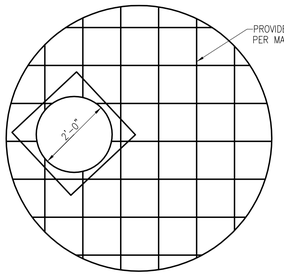

TOP SLAB

OUTLET "D"	M.H. I.D.	TOP SLAB "T"	WALLS "W"	REINF. STEEL *
** 24" OR LESS	4'-0"	9"	8"	#6 @ 9" EA. WAY
30"	4'-0"	9"	8"	#6 @ 9" EA. WAY
36"	4'-0"	9"	12"	#6 @ 9" EA. WAY
42"	5'-0"	10"	12"	#6 @ 9" EA. WAY
48" 54"	6'-0"	11"	12"	#7 @ 9" EA. WAY

* TOP SLAB
** 2' SUMP REQ. FOR MANHOLE WITH OUTLETS OF 18" AND UNDER.

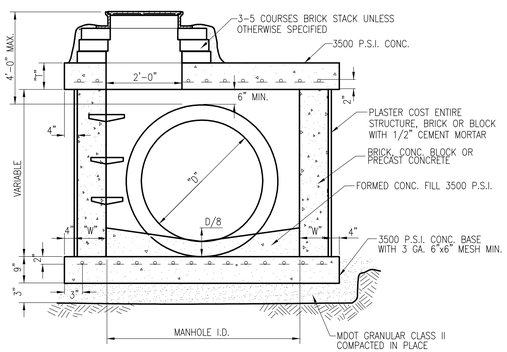

TYPICAL SECTION MANHOLE "D" (LOW HEAD)

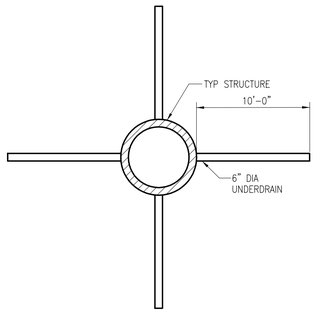

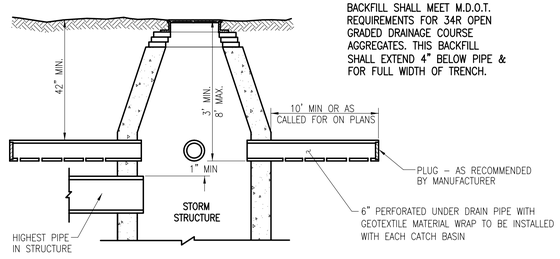

NOTE:
BACKFILL SHALL MEET M.D.O.T. REQUIREMENTS FOR 34R OPEN GRADED DRAINAGE COURSE AGGREGATES. THIS BACKFILL SHALL EXTEND 4" BELOW PIPE & FOR FULL WIDTH OF TRENCH.

MANHOLE WITH UNDERDRAIN

NOTE:
OIL/WATER SEPARATOR MANHOLE SHALL BE 5'DIAMETER STRUCTURE WITH 4' SUMP AND 6" OF EXTENSION OF SUBMERGED TEE. PROVIDE MANHOLE TOP.

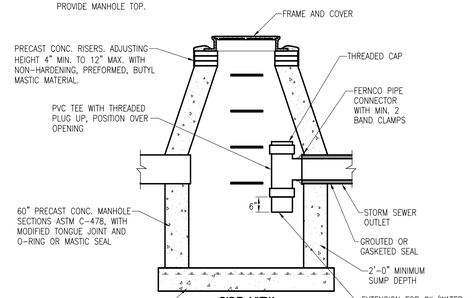

SIDE VIEW

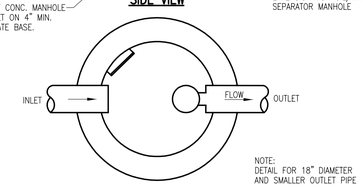

NOTE:
DETAIL FOR 18" DIAMETER AND SMALLER OUTLET PIPE

PLAN VIEW

ENVIRONMENTAL CATCH BASIN/MANHOLE

OHM

34000 Plymouth Road | Livonia, MI 48150 | P (734) 522-6711 | F (734) 522-6427 | WWW.OHM-ADVISORS.COM

COPYRIGHT 2007 OHM ALL DRAWINGS AND WRITTEN MATERIALS APPEARING HEREIN CONSTITUTE THE ORIGINAL AND UNPUBLISHED WORK OF OHM AND THE SAME MAY NOT BE DUPLICATED, DISTRIBUTED, OR DISCLOSED WITHOUT PRIOR WRITTEN CONSENT OF OHM

DATE | BID DATE #### | CADD #### | ENGINEER #### | PROJ MGR #### | SECTION #### | TOWN #### | RANGE ####
CLIENT: ####
COUNTY: ####
CITY/VILLAGE/TOWNSHIP: ####
JOB # ####
SCALE H: 1"=40' V: 1"=4'
HORZ DATUM ####
VERT DATUM ####
DATE:
REVISIONS:
DATE:
REVISIONS:

SCIO TOWNSHIP
STORM SEWER DETAILS

SHEET
#####
OF ####

DRAWING PATH: S:\CVT\Scio\Twp\Standards\CADD\STD_STM\STM DETAILS.DWG May 29, 2007 - 3:14pm

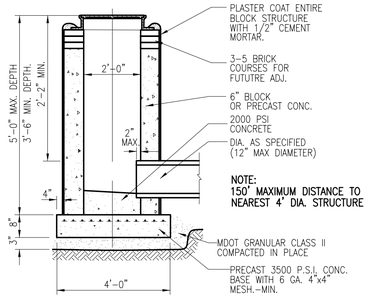

STANDARD INLET

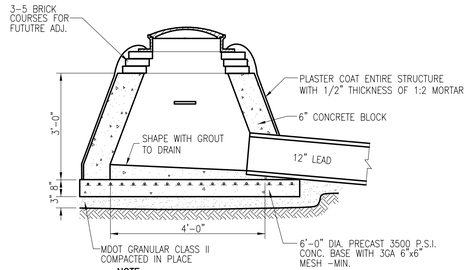

NOTE:
THIS STRUCTURE MAY ONLY BE USED APON APPROVAL FROM SCIO TOWNSHIP OR TOWNSHIP ENGINEER.

YARD BASIN

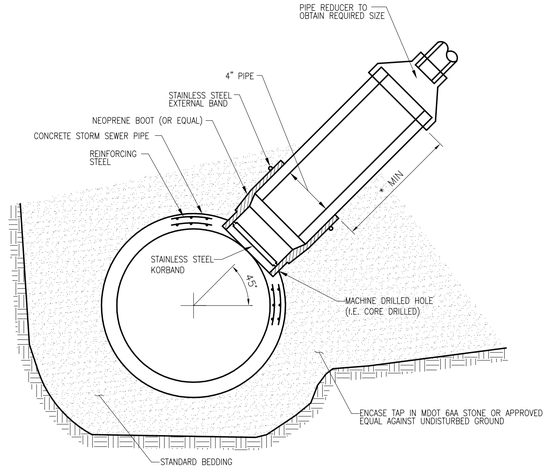

NOTE:
CONNECTION DETAIL FOR DIRECTLY TAPING A SUMP INTO THE PIPE WALL OF EXISTING OR PROPOSED CONCRETE SEWER

SUMP TAP FOR
FOR CONCRETE PIPE

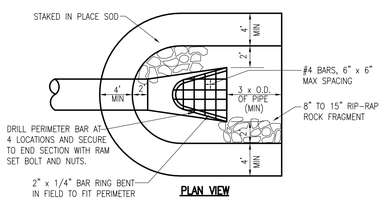

PLAN VIEW

NOTE:
MINIMUM REQUIREMENTS FOR RIP-RAP MATERIAL SHALL MEET MDOT SPECIFICATION 8.19.02

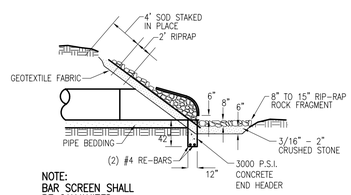

NOTE:
BAR SCREEN SHALL BE GALVANIZED

PROFILE VIEW

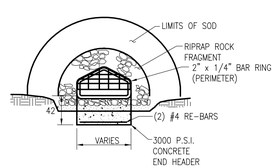

END VIEW

RIP RAP SCHEDULE

PIPE DIA	SY
12"	4
15"	4
18"	4
21"	5
24"	6
27"	7
30"	8
36"	10
42"	12
48"	14

GRATE & END SECTION

SCIO TOWNSHIP
STANDARD STORM SEWER CONSTRUCTION NOTES

1. ALL CONSTRUCTION PROCEDURES AND MATERIALS USED ON ALL STORM SEWER PROJECTS SHALL CONFORM TO THE CURRENT SCIO TOWNSHIP ENGINEERING STANDARDS AND DESIGN SPECIFICATIONS MANUAL.

2. ALL MANHOLE RIMS SHALL BE SET TO GRADE AS FURNISHED BY THE ENGINEER.

3. THE MINIMUM ALLOWABLE COVERAGE OVER PIPE IS 3 FEET. LOW-HEAD STRUCTURES SHALL BE INSTALLED IN LOCATIONS WHERE THE COVER OVER TOP OF PIPE IS 4 FEET OR LESS.

4. ALL STORM SEWER SHALL BE INSTALLED TO THE GRADE SPECIFIED ON THE PLANS.

5. SUMP PUMP LEADS SHALL BE CONNECTED INTO AN ENCLOSED SYSTEM AND SHALL BE TAPPED DIRECTLY INTO THE STORM SEWER OR A STORM SEWER STRUCTURE. AT A MINIMUM, A 4 INCH CONNECTION WITH A BOOT SHALL BE USED AND WILL BE ALLOWED TO DISCHARGE UNRESTRICTED.

STORM SEWER MATERIALS

6. STORM SEWER PIPE SHALL BE REINFORCED CONCRETE PIPE CONFORMING TO THE CURRENT ASTM "SPECIFICATIONS FOR REINFORCED CONCRETE CULVERT, STORM DRAIN AND SEWER PIPE, ASTM C-76 FOR CIRCULAR PIPE OR ASTM C-507 FOR ELLIPTICAL PIPE, LATEST REVISION. IF OTHER MATERIALS ARE PROPOSED FOR USE, THE DESIGN ENGINEER WILL FURNISH LOAD CARRYING DESIGN ANALYSIS FOR THE PIPE FOR THE PROPOSED DEPTH AND CONDITIONS.

7. CORRUGATED METAL PIPE CULVERTS SHALL CONFORM TO AASHTO M36 OR ASTM A760, LATEST REVISION. PIPE SHALL BE GALVANIZED UNLESS OTHERWISE NOTED ON THE DRAWINGS.

8. MODIFIED GROOVE TONGUE PIPE JOINTS SHALL HAVE A RUBBER GASKET SNAPPED INTO A GROOVE CAST INTO THE TONGUE. RUBBER GASKET JOINTS SHALL BE LUBRICATED AND COUPLED IN ACCORDANCE WITH PIPE MANUFACTURER'S PRINTED INSTRUCTIONS. CORRUGATED METAL PIPE JOINTS SHALL BE CORRUGATED COUPLING TYPE WITH ALL MATERIALS GALVANIZED IN ACCORDANCE WITH AASHTO M36, LATEST REVISION.

9. MANHOLES AND CATCH BASINS SHALL BE CONSTRUCTED IN ACCORDANCE WITH THE ACCOMPANYING SCIO TOWNSHIP STANDARD DETAILS. PRECAST REINFORCED CONCRETE MANHOLE/CATCH BASIN SECTIONS SHALL CONFORM TO THE REQUIREMENTS OF ASTM C-478, LATEST REVISION. BRICK FOR CASTING ADJUSTMENTS OR CONCRETE BLOCK FOR MANHOLE, INLET, OR CATCH BASIN CONSTRUCTION SHALL CONFORM TO THE REQUIREMENTS OF THE MDOT STANDARD SPECIFICATIONS FOR CONSTRUCTION, LATEST REVISION. A MINIMUM OF THREE TO A MAXIMUM OF SIX ADJUSTMENT COURSES SHALL BE PLACED ABOVE THE TOP OF THE CONE SECTION ON ALL PRECAST OR BLOCK MANHOLES/CATCH BASINS.

10. MANHOLE COVERS AND FRAMES SHALL BE EAST JORDAN IRON WORKS #1040 WITH TYPE "B" COVER OR APPROVED EQUAL. PAVEMENT CATCH BASIN AND INLET FRAMES AND GRATES SHALL BE IN ACCORDANCE WITH THE REQUIREMENTS OF THE WASHTENAW COUNTY ROAD COMMISSION. LAWN CATCH BASIN AND INLET FRAMES AND GRATES SHALL BE EAST JORDAN IRON WORKS #1000 WITH TYPE "N" GRATE OR APPROVED EQUAL. DITCH CATCH BASIN FRAMES AND GRATES SHALL BE EAST JORDAN IRON WORKS #1000 WITH TYPE 01 BEEHIVE GRATE OR APPROVED EQUAL.

OHM
34000 Plymouth Road | Livonia, MI 48150 | P (734) 522-6711 | F (734) 522-6427 | WWW.OHM-ADVISORS.COM

COPYRIGHT 2007 OHM ALL DRAWINGS AND WRITTEN MATERIALS APPEARING HEREIN CONSTITUTE THE ORIGINAL AND UNPUBLISHED WORK OF OHM AND THE SAME MAY NOT BE DUPLICATED, DISTRIBUTED, OR DISCLOSED WITHOUT PRIOR WRITTEN CONSENT OF OHM

DATE | BID DATE #### | CADD #### | ENGINEER #### | PROJ MGR. #### | SECTION #### | TOWN #### | RANGE ####
REVISIONS: | DATE: | CLIENT: #### | VERT DATUM ####
REVISIONS: | DATE: | JOB # ##### | HORZ DATUM #### | H: 1"=40' V: 1"=4'
REVISIONS: | DATE: | CITY/VILLAGE/TOWNSHIP #### | SCALE | DATE:
COUNTY ####

SCIO TOWNSHIP
STORM SEWER DETAILS

SHEET
#####
OF #####

DRAWING PATH: S:\CVTSod\Twp\Standards\CADD\STD_STM\STM DETAILS.DWG May 29, 2007 - 3:17pm

DIA. OF WATER MAIN	THRUST BLOCK		
D	A	B	C
6"	1'8"	1'8"	9"
8"	2'0"	2'0"	12"
12"	3'0"	3'0"	15"
16"	4'0"	4'0"	18"
20"	6'0"	4'0"	21"
24"	7'0"	5'0"	2'0"

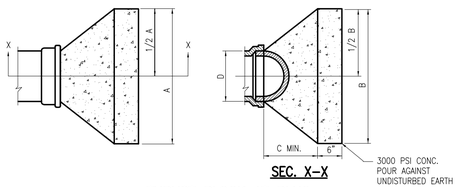

SEC. X–X

THRUST BLOCK AT PLUG

THRUST BLOCKS ALLOWED ONLY WITH APPROVAL OF UTILITIES DIRECTOR

DIA. OF WATER MAIN	THRUST BLOCK		
D	A	B	C
8"	2'0"	1'8"	15"
12"	3'3"	2'0"	18"
16"	4'0"	3'0"	21"

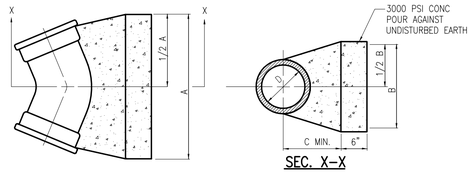

SEC. X–X

THRUST BLOCK AT 45° BEND

THRUST BLOCKS ALLOWED ONLY WITH APPROVAL OF UTILITIES DIRECTOR

DIA. OF WATER MAIN	THRUST BLOCK		
D	A	B	C
16"	2'0"	1'8"	12"
20"	2'6"	2'0"	15"
24"	2'9"	2'6"	18"

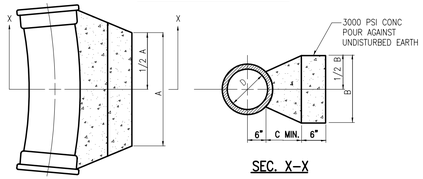

SEC. X–X

THRUST BLOCK AT 11 1/4° BEND

THRUST BLOCKS ALLOWED ONLY WITH APPROVAL OF UTILITIES DIRECTOR

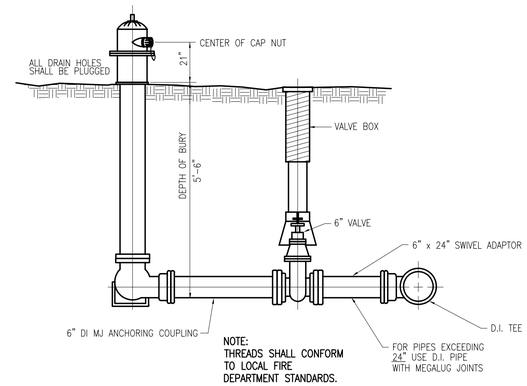

DIA. OF WATER MAIN	THRUST BLOCK		
D	A	B	C
6"	2'0"	1'8"	9"
8"	2'9"	2'0"	12"
12"	4'0"	3'0"	15"
16"	5'6"	4'0"	18"

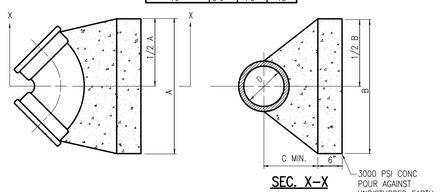

SEC. X–X

THRUST BLOCK AT 90° BEND

THRUST BLOCKS ALLOWED ONLY WITH APPROVAL OF UTILITIES DIRECTOR

DIA. OF WATER MAIN	THRUST BLOCK		
D	A	B	C
12"	2'0"	2'1"	18"
16"	3'0"	2'0"	21"
20"	3'9"	2'6"	2'0"

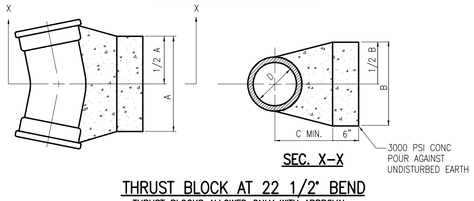

SEC. X–X

THRUST BLOCK AT 22 1/2° BEND

THRUST BLOCKS ALLOWED ONLY WITH APPROVAL OF UTILITIES DIRECTOR

DIA. OF TEE		THRUST BLOCK	
D	D_1	A	C
8"	8"	2'0"	21"
12"	8"	2'0"	21"
16"	8"	2'0"	21"
12"	12"	3'0"	2'0"
16"	12"	3'0"	2'0"
20"	12"	3'0"	2'0"
24"	12"	3'0"	2'0"
16"	16"	4'0"	2'3"
20"	16"	4'0"	2'3"
24"	16"	4'0"	2'3"

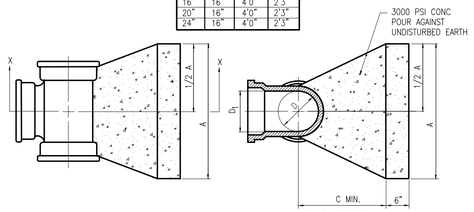

SEC. X–X

THRUST BLOCK AT TEE

THRUST BLOCKS ALLOWED ONLY WITH APPROVAL OF UTILITIES DIRECTOR

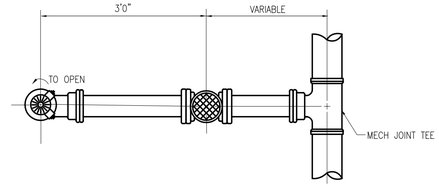

FIRE HYDRANT ASSEMBLY

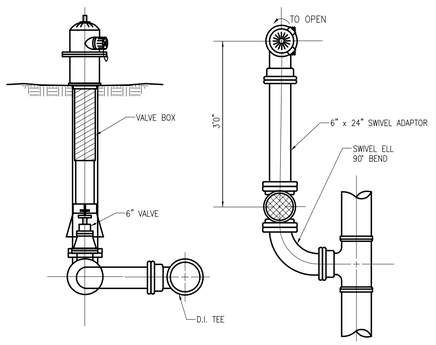

CLOSE COUPLE HYDRANT SETTING

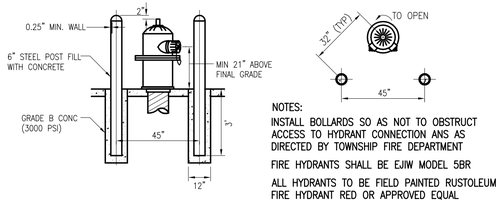

NOTES:

INSTALL BOLLARDS SO AS NOT TO OBSTRUCT ACCESS TO HYDRANT CONNECTION ANS AS DIRECTED BY TOWNSHIP FIRE DEPARTMENT

FIRE HYDRANTS SHALL BE EJIW MODEL 5BR

ALL HYDRANTS TO BE FIELD PAINTED RUSTOLEUM FIRE HYDRANT RED OR APPROVED EQUAL

BOLLARD DETAIL

NOTES:

INSTALL ADDITIONAL FITTINGS PIPE AS NECESSARY BETWEEN WATER MAIN & VALVE BOX TO ADJUST FOR PROPER LOCATION & GRADE OF HYDRANT ALL JOINTS ARE TO BE RESTRAINED WITH SWIVEL GLANDS.

HYDRANTS SHALL BE SUPPLIED WITH THE "HYDRA STORZ" NOZZLE OR APPROVED EQUAL

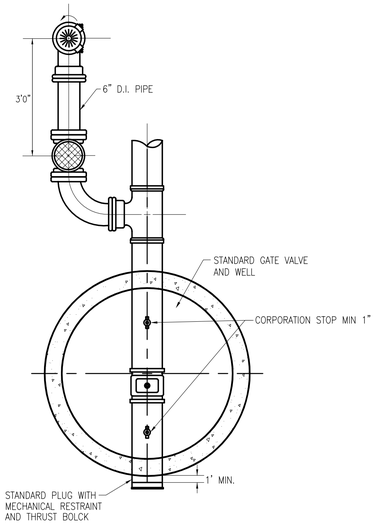

END OF WATER LINE OR TEMPORARY FIRE HYDRANT ASSEMBLY

NOTE:

END OF WATER LINE OR TEMPORARY FIRE HYDRANT ASSEMBLY ONLY USED AS APPROVED BY SCIO TOWNSHIP UTILITIES DEPARTMENT OR TOWNSHIP ENGINEER.

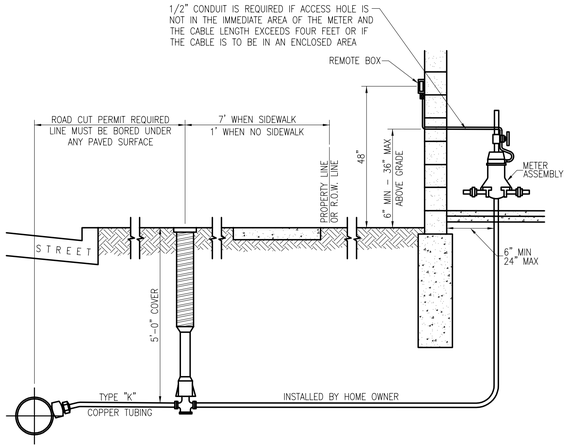

METER & SERVICE ASSEMBLY

NOTES:

NO WINDOW OR OBSTRUCTIONS ALLOWED ON OUTSIDE WALL ABOVE CONDUIT TO 4' ABOVE FINISHED GRADE.

REMOTE READER SHOULD BE LOCATED OUTSIDE OF ANY FENCED–IN AREA AND AWAY FROM BUSHES OR ANY OBSTRUCTIONS FOR EASY METER READER ACCESS.

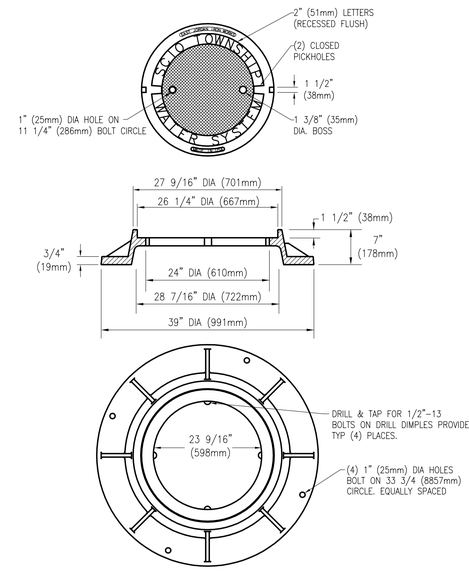

CAST IRON GATE WELL COVER AND GRADE RING

OHM
34000 Plymouth Road | Livonia, MI 48150 | P (734) 522-6711 | F (734) 522-6427 | WWW.OHM-ADVISORS.COM

THE ORIGINAL AND UNPUBLISHED WORK OF OHM AND THE SAME MAY NOT BE DUPLICATED, DISTRIBUTED, OR DISCLOSED WITHOUT PRIOR WRITTEN CONSENT OF OHM
COPYRIGHT 2007 OHM ALL DRAWINGS AND WRITTEN MATERIALS APPEARING HEREIN CONSTITUTE THE ORIGINAL

CITY/VILLAGE/TOWNSHIP: #### | COUNTY: #### | SCALE: H: 1"=40' V: 1"=4' | HORZ DATUM: #### | VERT DATUM: #### | JOB #: #### | CADD: #### | ENGINEER: #### | PROJ MGR: #### | SECTION: #### | TOWN: #### | RANGE: ####

CLIENT: ####

DATE	BID DATE	REVISIONS:	DATE:
	####		

REVISIONS: DATE:

SCIO TOWNSHIP
WATER MAIN DETAILS

SHEET ##### OF ####

DRAWING PATH: S:\CVT\ScioTwp\Standards\CADD\STD_WM\WM DETAILS.DWG May 29, 2007 - 3:11pm

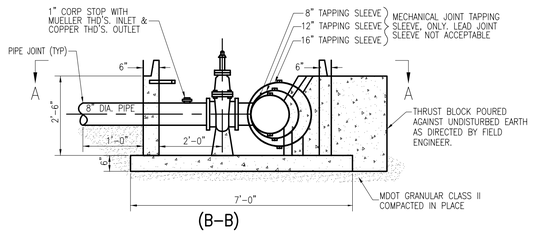

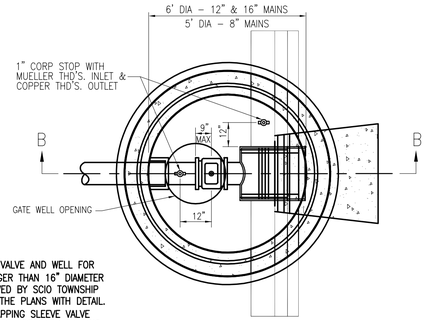

NOTES:
TAPPING SLEEVE VALVE AND WELL FOR WATER MAIN LARGER THAN 16" DIAMETER MUST BE APPROVED BY SCIO TOWNSHIP AND SHOWN ON THE PLANS WITH DETAIL.
USE OF 8"x8" TAPPING SLEEVE VALVE AND WELL MUST BE APPROVED BY SCIO TOWNSHIP D.P.W.

8" TAPPING SLEEVE, VALVE & WELL

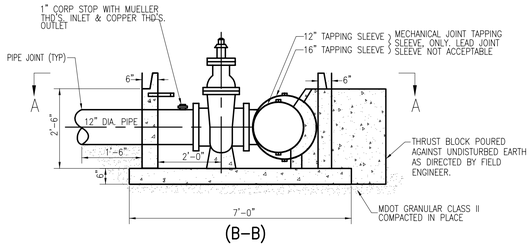

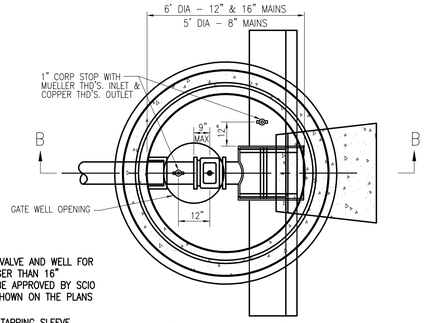

NOTES:
TAPPING SLEEVE VALVE AND WELL FOR WATER MAIN LARGER THAN 16" DIAMETER MUST BE APPROVED BY SCIO TOWNSHIP AND SHOWN ON THE PLANS WITH DETAIL.
USE OF 12"x12" TAPPING SLEEVE VALVE AND WELL MUST BE APPROVED BY SCIO TOWNSHIP D.P.W.

12" TAPPING SLEEVE, VALVE & WELL

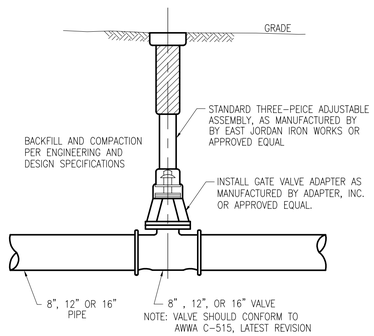

STANDARD GATE VALVE & BOX

PIPE RESTRAINT SCHEDULE

Ground buried pressure pipe – Ductile Iron Pipe

PIPE DIAMETER	TEES, 90° PLUGS	45° BENDS	22 ½° BENDS	REDUCERS
6	40	25	25	30
8	55	25	25	30
12	80	35	25	55
16	100	40	25	60
24	135	56	25	65

Lengths of pipe restraint are given in feet.

If required, pipe diameter is not listed in this table; the next largest pipe shall be used.

This table is based on a test pressure of 180 PSI (operating pressure plus water hammer). For other test pressures, all values to be increased or decreased proportionally.

The values provided of restraint length are in each direction from the point of deflection or termination except for tees, at which only the branch in the direction of the stem.

If tie rods are used, use four rods minimum and add 1/8-inch to bar diameter as corrosion allowance.

Size reduction is based upon the pipe diameter shown in this table.

Based upon:
Internal Pressure: 180
Pipe Depth: 5
Bedding Class: Type 4
Soil Type: Good Sand
Safety Factor: 2

NOTES:
PRECAST CONCRETE GATE WELL SECTIONS SHALL BE MANUFACTURED IN ACCORDANCE WITH A.S.T.M. DESIGNATION C478 UNLESS OTHERWISE SPECIFIED

ECCENTRIC CONES ARE ALLOWED PROVIDED GATE VALVE IS CENTERED ON MANHOLE OPENING

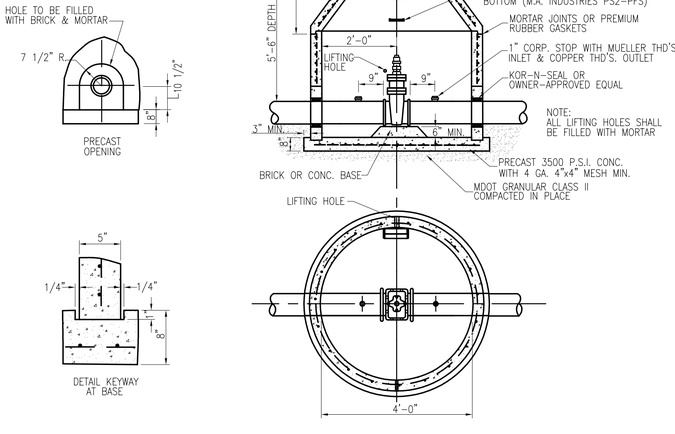

6", 8" & 12" GATE VALVE & WELL

NOTE:
PRECAST CONC. GATE WELL SECTIONS SHALL BE MANUFACTURED IN ACCORDANCE WITH A.S.T.M. DESIGNATION C478 UNLESS OTHERWISE SPECIFIED.

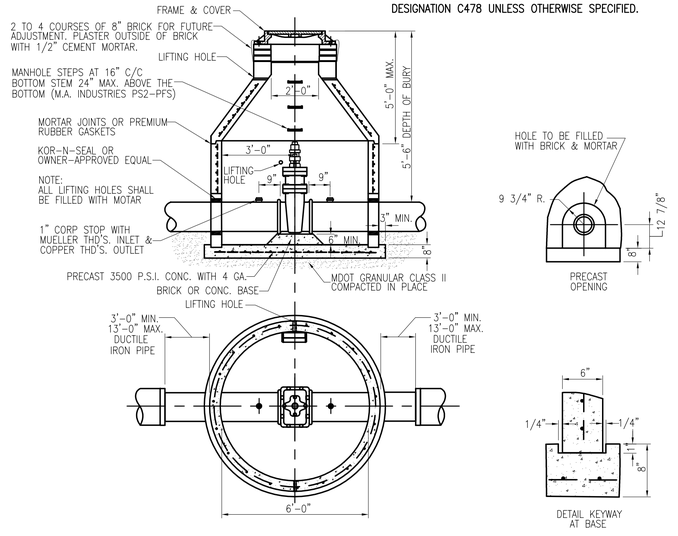

16" GATE VALVE & WELL

SCIO TOWNSHIP
STANDARD WATER MAIN CONSTRUCTION NOTES

1. ALL CONSTRUCTION PROCEDURES AND MATERIALS USED ON ALL WATER MAIN PROJECTS SHALL CONFORM TO THE CURRENT SCIO TOWNSHIP ENGINEERING STANDARDS AND DESIGN SPECIFICATIONS MANUAL.
2. NO INSTALLATION OF WATER MAIN SHALL TAKE PLACE WITHOUT TOWNSHIP'S INSPECTOR BEING PRESENT. UNLESS OTHERWISE SPECIFIED ON THE PLANS, TOP OF ALL WATER MAINS SHALL BE 5.5 FEET BELOW EXISTING OR PROPOSED GROUND, WHICHEVER APPLIES. 18 INCHES MINIMUM VERTICAL CLEARANCE SHALL BE MAINTAINED AT ALL EXISTING AND PROPOSED UTILITY CROSSINGS.
3. A MECHANICAL JOINT RESTRAINT SYSTEM SUCH AS MEGA LUGS OR LOCKING GASKETS SHALL BE USED FOR JOINT RESTRAINT INSTEAD OF CONCRETE THRUST BLOCKS.
4. POLY-WRAP SHALL BE USED AS REQUIRED BY SCIO TOWNSHIP.
5. A MINIMUM OF 10 FEET HORIZONTAL SEPARATION MUST BE MAINTAINED BETWEEN WATER MAIN AND SANITARY SEWERS, LEADS AND/OR STORM SEWERS. A MINIMUM OF 5 FEET HORIZONTAL SEPARATION MUST BE MAINTAINED BETWEEN WATER MAINS AND ANY UNDERGROUND UTILITY STRUCTURES AS MEASURED FROM THE OUTSIDE WALL OF ANY STRUCTURE.
6. WHERE WORK IS TO BE PERFORMED IN THE VICINITY OF A SCIO TOWNSHIP MAIN, CONTRACTOR SHALL NOTIFY THE UTILITIES DEPARTMENT AT LEAST THREE WORKING DAYS PRIOR TO START OF CONSTRUCTION AND SCHEDULE AN INSPECTOR IF NECESSARY.
7. CONTACT MISS DIG AT 1-800-482-7171 THREE WORKING DAYS BEFORE DIGGING.
8. WHERE WATER MAIN IS LOCATED UNDER PAVEMENT, SCIO TOWNSHIP WILL NOT BE RESPONSIBLE FOR REPAIRING PAVEMENT WITHIN THE EASEMENT IN THE EVENT THAT MAINTENANCE OR REPAIRS TO THE WATER MAIN BECOME NECESSARY.

WATER MAIN MATERIALS

1. ALL WATER MAINS SHALL BE DUCTILE IRON MANUFACTURED IN ACCORDANCE WITH AWWA C151 (ANSI A21.51), LATEST REVISION. PIPE SHALL BE A MINIMUM STANDARD WALL THICKNESS CLASS 54 FOR PIPE DIAMETERS OF 6 THRU 16 INCH INCLUSIVE, THICKNESS CLASS 55 FOR 20 INCH, AND THICKNESS CLASS 56 FOR LARGER THAN 20 INCH. PIPE SHALL BE STANDARD CEMENT DOUBLE THICKNESS LINED IN ACCORDANCE WITH AWWA C104 (ANSI A21.4), LATEST REVISION. PIPE EXTERIOR SHALL BE SEAL COATED WITH AN APPROVED BITUMINOUS SEAL COAT.
2. JOINTS FOR WATER MAIN SHALL BE PUSH-ON TYPE CONFORMING TO AWWA C111 (ANSI A21.11) STANDARD SPECIFICATION, LATEST REVISION. RUBBER GASKETS, RETAINER GLANDS, AND LUBRICANT SHALL BE FURNISHED WITH THE PIPE AND SHALL MEET THE PIPE MANUFACTURER'S REQUIREMENTS.
3. ALL HYDRANTS SHALL BE EAST JORDAN IRON WORKS MODEL 5BR 250 OR MUELLER A-425 SUPER CENTURION 250 AND SHALL CONFORM TO AWWA C-502, LATEST REVISION. THE FIRE HYDRANT VALVE SHALL BE 5 ¼ INCH DIAMETER. IF HYDRANTS ARE FURNISHED WITH DRAIN HOLES, THE HOLES SHALL BE PLUGGED AND WATERTIGHT. ALL HYDRANTS SHALL BE INSTALLED WITH A SIX 6 INCH ISOLATION VALVE WITH AN APPROVED VALVE BOX, SET AT FINISHED GRADE AND CENTERED OVER THE VALVE-OPERATING NUT, FREE OF DIRT AND DEBRIS. HYDRANTS SHALL BE SET SO THE CENTERLINE OF THE NOZZLE IS 21 INCHES ABOVE FINISHED GRADE. THE CONTRACTOR SHALL PROVIDE ONE REPAIR KIT FOR EVERY FIVE HYDRANTS ADDED TO THE SYSTEM. HYDRANTS MUST BE PAINTED RUSTOLEUM "FIRE HYDRANT RED" AND SHALL OPEN IN A COUNTER-CLOCKWISE (LEFT) DIRECTION WITH A STANDARD 1-3/8 INCH PENTAGON NUT. HYDRANTS SHALL HAVE A CENTER STEM WITH A DOUBLE "O" RING SEAL. THE HYDRANT VALVE SHALL BE 5 ¼ INCH DIAMETER AND THE BARREL AND HEAD SHALL BE CAST IRON WITH A BREAKABLE TRAFFIC SAFETY FLANGE. HYDRANTS SHALL HAVE ONE 3-3/8 INCH PUMPER CONNECTION WITH 7 ½ THREADS PER INCH (ANN ARBOR STANDARDS) AND ONE 4-INCH STORZ CONNECTION. THE STORZ CONNECTION SHALL BE THE HARRINGTON INTEGRAL STORZ AND ATTACHED WITH A CABLE AND PRESSURE CAP. A NOZZLE CAP SHALL BE PROVIDED FOR THE 3-3/8 INCH CONNECTION, ATTACHED TO THE HYDRANT WITH A NON-LINKING CHAIN. ALL HYDRANTS SHALL HAVE 6-FEET OF BURY FROM THE TOP OF CURB.
4. GATE VALVES SHALL BE MANUFACTURED IN CONFORMANCE WITH THE APPLICABLE REQUIREMENTS OF AMERICAN WATER WORKS ASSOCIATION (AWWA) C509, LATEST REVISION. THE VALVES SHALL BE OF DUCTILE IRON BODY AND BONNET, FULLY BRONZE MOUNTED, WITH BRONZE STEMS. VALVES FOR WATER MAINS 16 INCH DIAMETER OR SMALLER SHALL BE RESILIENT SEATED WEDGE VALVES, EAST JORDAN IRON WORKS C515 OR MUELLER A-2360-20. VALVE STEMS SHALL BE BRONZE OF A NON-RISING DESIGN WITH DOUBLE "O" RING PACKING. GATE VALVES SHALL HAVE A 2 INCH SQUARE OPERATING NUT THAT TURNS RIGHT (CLOCKWISE) TO OPEN. GATE WELLS SHALL BE CONSTRUCTED OF REINFORCED CONCRETE SECTIONS IN ACCORDANCE WITH DETAILS SHOWN ON THE STANDARD PLANS. PRECAST REINFORCED CONCRETE GATE WELL SECTIONS SHALL CONFORM TO ASTM C478. ALL TAPPING SLEEVES AND VALVES ARE TO BE PLACED IN A GATE WELL UNLESS OTHERWISE SHOWN OR NOTED ON THE PLANS.

DRAWING PATH: S:\CVT\Sdd1\wp\Standards\CADD\STD_WM\WM DETAILS.DWG May 30, 2007 - 6:42am

65

OHM

COUNTY ####
CITY/VILLAGE/TOWNSHIP ####
JOB # ####
SCALE H: 1"=40' V: 1"=4'
HORZ DATUM ####
VERT DATUM ####
DATE:
REVISIONS:
DATE:

CLIENT: ####
PROJ MGR ####
ENGINEER ####
CADD ####
BID DATE ####
DATE
REVISIONS:
DATE:

34000 Plymouth Road | Livonia, MI 48150 | P (734) 522-6711 | F (734) 522-6427 | WWW.OHM-ADVISORS.COM

COPYRIGHT 2007 OHM ALL DRAWINGS AND WRITTEN MATERIALS APPEARING HEREIN CONSTITUTE THE ORIGINAL AND UNPUBLISHED WORK OF OHM AND THE SAME MAY NOT BE DUPLICATED, DISTRIBUTED, OR DISCLOSED WITHOUT PRIOR WRITTEN CONSENT OF OHM

SCIO TOWNSHIP
WATER MAIN DETAILS

SHEET
#####
OF ####

E.T. MacKenzie Company
One of The MacKenzie Companies

Contracting and Consulting

October 25, 2021

Scio Township Planning Commission
827 N. Zeeb Road
Ann Arbor, MI 48103-1599

RE: Site Plan Review #19007 Minor Site Plan Amendment Request for
the E. T. MacKenzie Co. Office at 8197 Jackson Road, Ann Arbor, MI

Honorable Commissioners:

The E. T. MacKenzie Company respectfully requests the review of two Minor Site Plan Amendments for our new office building now completing construction at the above address. Planning staff has indicated a letter of explanation of our requests along with 4 paper copies of the marked-up revised, approved site plan and a separate flash drive containing copies of all submittal items would be sufficient for the Amendment application.

First, we respectfully request the Planning Commission eliminate the requirement to provide a screening buffer along our eastern property line to the adjacent Agriculture zoned property. At the time of our Site Plan review process the property next door was vacant and for sale or rent as a single family home. The Planning Commission decided to enforce the requirement for the buffer because of the possibility the property could be sold/used for residential purposes. Also, in 2018, the Planning staff was aware of a potential buyer looking at the property for an assisted living facility. The property is now partially cleared of its trees and being used as a landscape contractor's business, outdoor storage yard and parking area for cars and construction equipment. The exact same use we are legally approved for on our I-2 zoned property. The need for a buffer is now moot.

The approved Site and Landscape Plan screening buffer consists of proposed and existing landscaping on the northern portion of the site between our new office and the run-down farmhouse *and* a six foot tall board on board fence adjacent to our existing gravel parking/construction yard. The enclosed, marked-up Landscape Plan shows our proposal to eliminate the construction of the fence and maintain the proposed plant material buffer between our office and the old farmhouse.

The second request is for a time deferment for the installation of the sidewalk across the frontage of the property and the lead walk from the right-of-way sidewalk to the sidewalk along the front of our office building. The addition at the Pirate's Cove Storage facility, now under construction, was given a time deferment for the right-of-way sidewalk construction until a future date as determined by the Township. We request the same time deferment since both sites are virtually the same distance west of the end of the existing sidewalk location.

I look forward to presenting our requests to the Planning Commission at your next available meeting. If you have any questions or need additional information regarding our requests, please contact me at your earliest convenience. My direct dial number is (517) 622-2117. Thank you for your assistance in our endeavors to plan for the future of our company in your community.

Sincerely,
E. T. MacKenzie Company

Ronald W. Clark

Ronald W. Clark, Landscape Architect #975
Project Manager

Attachments:
Marked-up Site/Landscape Plan showing the elimination of the board on board fence
Site Photos of the new landscape company outdoor storage yard and parking area.
A Flash Drive with digital copies of the submitted materials

8197 Jackson Road

SCIO TOWNSHIP, WASHTENAW COUNTY, MICHIGAN

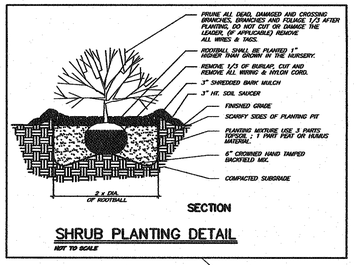

SHRUB PLANTING DETAIL
NOT TO SCALE

LIGHTING NOTES:

1. ALL LIGHT POLES SHALL BE A MAXIMUM OF 20' HIGH.
2. ALL FIXTURES SHALL BE FACING DOWNWARD AND SHIELDED AS NECESSARY TO KEEP ALL LIGHT WITHIN THE PROPERTY LIMITS.
3. LIGHT FIXTURE CUT SHEETS CAN BE LOCATED ON THE DETAIL PAGE.

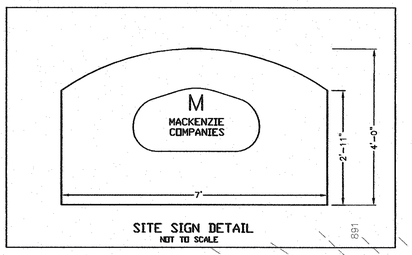

SITE SIGN DETAIL
NOT TO SCALE

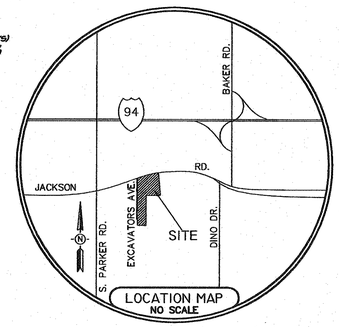

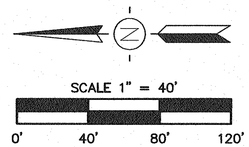



ZONING: IRP

ZONING: A-1

ZONING: I-1

SITE PLAN MODIFICATION - Sidewalk construction deferment until future date directed by township.

SITE PLAN MODIFICATION
FENCE NOT TO BE CONSTRUCTED
±130 LF FENCE (BOARD ON BOARD (6' TALL)

SITE PLAN MODIFICATION
FENCE NOT TO BE CONSTRUCTED
±630 LF FENCE (BOARD ON BOARD (6' TALL)

JACKSON RD. (VARIABLE WIDTH-PUBLIC)

F IRON ROD 2.4' N. 0.5' E. OF PROP. COR.

F IRON PIPE 0.5' N. 0.3' W. OF PROP. COR.

F IRON ROD 0.3' N. 0.8' W. OF PROP. COR.

F IRON PIPE 0.4' N. 2.7' W. OF PROP. COR.

S16°42'00"E 330.00'

S73°18'00"W 110.66'

S00°50'39"E 673.79'(M)

673.72'(R)

N73°18'00"E 243.00'(M)

243.00'(R)

N00°40'00"W 951.64

S89°57'00"W 220.44'

E-W 1/4 LINE SEC. 19, T2S, R5E
S. LINE LOT 8

S.E. CORNER LOT 8, COLE & HUSS SUB'D.

E. LINE LOT 12

E. LINE LOT 8

S. LINE LOTS 7 & 8

PROPOSED BUILDING

PROPOSED SHIELDED WALL PAK LIGHT (WP4-FSCC-ADDV) (SEE DETAILS)

PROPOSED SHIELDED CANOPY LIGHT (VANLEDOWN) (SEE DETAILS)

EXISTING BUILDING LIGHTING FIXTURES TO REMAIN (3)

EXISTING LIGHT POLE (REPLACE FIXTURE WITH RAB OUTDOOR FIXTURE, ALED2T105SFNRG) (AREA LIGHT FIXTURE, WITH 20' POLE)

EXISTING LIGHT POLE (REPLACE FIXTURE WITH RAB OUTDOOR FIXTURE, ALED2T105SFNRG) (AREA LIGHT FIXTURE, WITH 20' POLE)

EX. FUEL TANKS (2) (CONC. BASE & SECONDARY CONTAINMENT (2))

EX. TRANSFORMER

EX. WELL

BENCHMARK #2

BENCHMARK #1

TERMINATE FENCE AT THE NE CORNER OF THE POND

SCREENED DUMPSTER (SEE DETAIL, THIS PAGE)

VEGETATED SWALE

EX. CABLE

EX. UNDERGROUND ELECTRIC

EX. GRAVEL

EX. GATE

EX. SIGN

PROP. SIGN

EX. WATER

FENCE CORNER 0.5' W. OF P/L

FENCE CORNER 1.0' N. 2.2' W. OF PROP. COR.

EX. 24" STORM
24" I.E. N 889.01
24" I.E. S 888.59

EX. 18" CMP
18" I.E. E 905.70
18" I.E. W 905.77

EX. 18" CMP
18" I.E. N 901.11
18" I.E. S 900.22

EX. 12" STORM
12" I.E. N 892.90
12" I.E. S 892.90

EX. Bldg

ZONING: IRP

LEGEND

- PROPOSED WATER MAIN
- PROPOSED SANITARY SEWER
- PROPOSED STORM SEWER
- PROPOSED HYDRANT
- PROPOSED GATE VALVE
- PROPOSED SAN. M.H.
- PROPOSED STORM M.H.
- PROPOSED C.B.
- 800 PROPOSED GRADES

EX. LEGEND

- = SET 1/2" BAR WITH CAP
- = FOUND IRON AS NOTED
- = DEED LINE
- = DISTANCE NOT TO SCALE
- = FENCE
- = ASPHALT
- = CONCRETE
- = GRAVEL
- = EXISTING SPOT ELEVATION
- = EXISTING CONTOUR ELEVATION
- = SANITARY SEWER
- = STORM SEWER
- = WATER LINE
- = GAS LINE
- = UNDERGROUND TELEPHONE
- = UNDERGROUND TELEVISION
- = UNDERGROUND ELECTRIC
- = OVERHEAD WIRES
- = DECIDUOUS TREE
- = EVERGREEN TREE
- = SANITARY MANHOLE
- = DRAINAGE MANHOLE
- = ELECTRIC MANHOLE
- = TELEPHONE MANHOLE
- = CATCHBASIN
- = SANITARY CLEANOUT
- = FIRE HYDRANT
- = VALVE
- = UTILITY POLE
- = LIGHT POLE
- = GUY POLE
- = GUY WIRE
- = UTILITY PEDESTAL
- = TRANSFORMER
- = HANDHOLE
- = ELECTRIC METER
- = GAS METER
- = WATER METER
- = SOIL BORING
- = SIGN
- = POST
- = AIR CONDITIONING UNIT

Plant List

Key	Quantity	Common Name	Botanical Name	Size	Remarks
Trees					
PO	3	Pin Oak	Quercus palustris	2.5" Cal	B&B
GL	3	Greenspire Littleleaf Linden	Tilia cordata "Greenspire"	2.5" Cal	B&B
RB	2	Red Bud	Cercis canadensis	8' - 10'	Clump form
BS	2	Colorado Blue Spruce	Picea pungens "Glauca"	6' - 7'	B&B
CF	1	Concolor White Fir	Abies concolor	6' - 7'	B&B
SM	4	Royal Star Magnolia	Magnolia stellata "Royal Star"	4'-5'	B&B
AA	15	Mission Arborvitae	Thuja occidentalis "Techny"	5'-6'	Potted
Shrubs					
BB	8	Dwarf Burning Bush	Euonymus alatus "Compacta"	30"-36"	B&B
AC	2	Compact American Cranberrybush	Viburnum trilobum "Compactum"	30"-36"	B&B
OG	16	Old Gold Juniper	Junipeus chinensis "Old Gold"	5 Gal	Potted
AJ	12	Andorra Youngstown Juniper	Juniperus horizontalis "Youngstown"	5 Gal	Potted
DY	6	Dark Green Spreading Yew	Taxus x media "Nigra"	5 Gal	Potted
HY	11	Hicks Yew	Taxus x media "Hicksi"	5 Gal	Potted
NS	3	Bird's Nest Spruce	Picea abies "Nidiformis"	5 Gal	Potted
BW	14	Winter Gem Boxwood	Buxus media "Winter Gem"	3 Gal	Potted
PS	10	Little Princess Spirea	Spirea japonica "Little Princess"	3 Gal	Potted
PB	9	Crimson Pygmy Barberry	Berberis thunbergi "Crimson Pygmy"	3 Gal	Potted
Perennials					
DL	6	Tiger Daylily	Hemerocallis "Stella d'orno"	1 Gal	Potted

Ordinance Compliance Calculations for Landscaping

Greenbelt Planting - Jackson Road frontage = 243'. Req. # trees is 243 ÷ 30 = 8.1 or 8 trees. 1 Existing trees will be saved. 8 trees are provide

Parking Lot Perimeter - Req. # of shrubs is 243 ÷ 30= 8, 8 x 6 = 48 shrubs. 48 shrubs are provided.
30' of parking lot visible from street. Req. # trees is 30 ÷ 30' = 1 1 tree is proposed adjacent to the parking area.

Parking Lot Interior- Req. # of shrubs is 30 ÷ 30 x 6 = 6 shrubs. 12 Shrubs are provided. Greenbelt berming also screens parking area.
1 tree is required for every 8 parking spaces. A second tree is provided adjacent to the parking area.

Foundation Plantings - Building has 100' of foundation requiring landscaping. Req. trees is 100' ÷ 30 = 3.33 or 3. 3 ornamental trees are provided.
Req. # of shrubs is 100' ÷ 30 x 6 = 18. 31 Shrubs are provided.

General Site Landscaping - 45.9% of the site area remains as pervious open grass or landscaping areas. 29 trees currently exist on the site with a total DBH of 409 inches, 1 trees is proposed to be removed totaling 16 DBH. 96% of Existing DBH shall remain after new construction. Additional new landscaping is proposed to soften the appearance of the existing Mechanic's Shop and the eastern side of the proposed office.

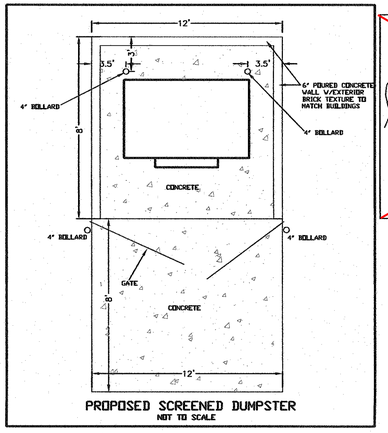

PROPOSED SCREENED DUMPSTER
NOT TO SCALE

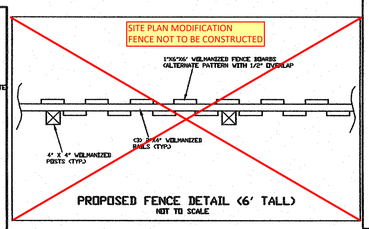

PROPOSED FENCE DETAIL (6' TALL)
NOT TO SCALE

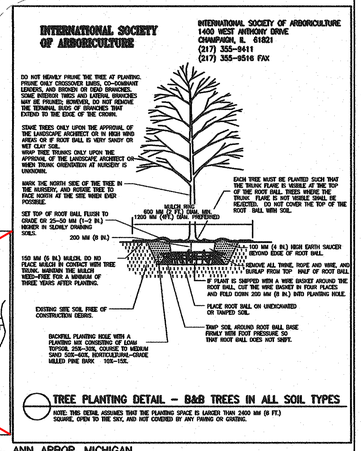

TREE PLANTING DETAIL - B&B TREES IN ALL SOIL TYPES

NOTE: THIS DETAIL ASSUMES THAT THE PLANTING SPACE IS LARGER THAN 2400 MM (8 FT.) SQUARE, OPEN TO THE SKY, AND NOT COVERED BY ANY PAVING OR CANOPIES.

SITE ADDRESS: 8197 JACKSON RD., ANN ARBOR, MICHIGAN
PARCEL ID#: H-08-19-275-012

SURVEY BY OTHERS



REVISIONS
2-8-19 OWNER REVIEW
2-26-19 SITE PLAN SUBMITTAL
3-25-19 SITE PLAN SUBMITTAL
4-15-19 SITE PLAN SUBMITTAL
7-18-19 SITE PLAN REVISIONS
9-4-19 SITE PLAN REVISIONS
9-16-19 SITE PLAN REVISIONS
10-24-19 SITE PLAN REVISIONS
2-3-20 REVISION

KEBS, INC.
KYES ENGINEERING
BRYAN LAND SURVEYS
2116 HASLETT ROAD, HASLETT, MI 48840
PH. 517-339-1014 FAX. 517-339-8047
Marshall Office
Ph. 269-781-9800

8197 Jackson Road
LANDSCAPE & LIGHTING PLAN

SCALE: 1"= 40'	DESIGNER: GAP	APPROVED BY: JWK
DATE: 1-28-19	PROJECT MGR. JWK	SHEET 5 OF 8
AUTHORIZED BY: E.T. MACKENZIE COMPANY		JOB #: 94729

Township of Scio

827 N. Zeeb Road · Ann Arbor, MI 48103
734/369-9400 · 734/665-0825 Fax
www.ScioTownship.org

Applications will not be processed until deemed complete.
Incomplete applications will be destroyed after 90 days.

SITE PLAN 21016

☐ ADMINISTRATIVE SITE PLAN
☒ FULL SITE PLAN
DATE 09/20/2021
PROPERTY ID NO. H-08-21-400-035
ZONING DISTRICT C-2 & JROD

APPLICANT:
Scio Retail Management II LLC
AGENT/DEVELOPER
30200 Telegraph Road, Suite 205
STREET, NUMBER
Bingham Farms, MI 48025
CITY, STATE, ZIP
248-646-9999
PHONE
FAX
brandon@alrigusa.com
EMAIL

OWNER:
Scio Retail Management II LLC
NAME
30200 Telegraph Road, Suite 205
STREET, NUMBER
Bingham Farms, MI 48025
CITY, STATE, ZIP
248-646-9999
PHONE
FAX
brandon@alrigusa.com
EMAIL

PROPOSED NAME OF DEVELOPMENT: 140 Zeeb Road
ADDRESS OF PROPERTY (OR POPULAR ADDRESS): 140 Zeeb Road Scio Township MI
LEGAL DESCRIPTION: ☐ ATTACHED ☑ ON SITE PLAN
LOT SIZE: 1.73 AC (AREA) DEED RESTRICTIONS: ☐ NONE ☐ ATTACHED
DESCRIPTION OF PROPOSED USE: Restaurant with drive-thru facilities

STORIES: ☐ EXISTING ☑ NEW 1
SQ. FT.: ☐ ADDITION ☑ NEW 4,229SF

SQ. FT. BY USE:
☑ COMMERCIAL 4,229 SF
☐ OFFICE
☐ WAREHOUSE
☐ MANUFACTURING
☐ OTHER

SANITARY FACILITIES: ☑ SEWER ☐ SEPTIC
WATER: ☑ MUNICIPAL ☐ PRIVATE WELL

I AGREE TO GIVE PERMISSION FOR OFFICIALS OF SCIO TOWNSHIP TO ENTER THE PROPERTY SUBJECT TO THIS APPLICATION FOR PURPOSES OF INSPECTION.

☐ *Property owner authorization letter attached.*

[signature] 9/22/21 [signature] 9/22/21
SIGNATURE OF APPLICANT DATE SIGNATURE OF OWNER DATE

Brandon Schram / Auth. Agent
PRINT NAME PRINT NAME/TITLE

#1 20211007 #1006 $520.00 (1/2) **FOR OFFICE USE ONLY** FEES $1456.00 (2/2) (inon 10012021)

THIS APPLICATION HAS BEEN REVIEWED FOR COMPLIANCE WITH THE TOWNSHIP ZONING ORDINANCE, AND FOR ACCURACY OF PROPERTY DESCRIPTION:
#2-2021-11-04 #1012 $250.00 1/2 FEES $728.00 (2/2)

ORDINANCE ADMINISTRATOR DATE

PLANNING COMMISSION ACTION:
☐ APPROVED, DATE
☐ DENIED, DATE

TOWNSHIP BOARD:
☐ APPROVED, DATE
☐ DENIED, DATE

APPLICATION RECEIVED DATE:
FEE RECEIVED: CASH CHECK
SP DATE
SW
WA

EXPIRATION DATE:

Carlisle | Wortman
ASSOCIATES, INC.
117 NORTH FIRST STREET SUITE 70 ANN ARBOR, MI 48104 734.662.2200 734.662.1935 FAX

Date: October 28, 2021
Revised: November 17, 2021

Site Plan Review
For
Scio Township, Michigan

File No.:	SP#21016
Applicant:	Scio Retail Management II, LLC
Project Name:	140 Zeeb Road
Plan Date:	April 1, 2021
Revision Date:	September 22, 2021
Date Stamped:	September 23, 2021
Location:	140 Zeeb Road
Zoning:	C-2, General Commercial
Action Requested:	Site Plan Review.
Required Information:	Deficiencies are noted in the following sections of this review.

PROJECT AND SITE DESCRIPTION

The applicant is site plan approval to construct a 4,198 square foot drive-through restaurant at 140 S. Zeeb Road. This site contains 1.73 acres and is currently vacant and zoned C-2, General Commercial. The Planning Commission recommended approval of the drive-through conditional

use on this site on June 28, 2021, and the Township Board approved the conditional use on August 10, 2021.



Items to be Addressed: *None.*

LAND USE AND ZONING

Site: The subject site is zoned C-2, General Commercial and is currently vacant.

North: The site is bordered to the north by existing commercial uses. This area is zoned C-2, General Commercial.

South: South of the subject site are existing commercial uses. This area is zoned C-2, General Commercial.

East: East of the subject site across Zeeb Road are existing commercial uses that are zoned C-2, General Commercial. There is a vacant parcel of land directly across Zeeb Road that is zoned I-2, General Industrial.

West: West of the subject site is Meijer which is zoned C-2, General Commercial.

Items to be Addressed: *None.*

NATURAL RESOURCES

There are no significant natural resources or features located on the subject site as the site has been previously graded for development. However, six (6) mature trees along Zeeb Road will be removed to accommodate the development. Trees to be removed and preserved are demonstrated on Sheet C-2. Based on the provisions of Section 36-346(e), seventy-two (72)-inches of protected trees are proposed to be removed and a total of 112-inches of protected trees are found on the site allowing for 23-inches of protected trees to be removed without replacement (20%). The existing 4-inch trees in the southwest corner of the site are not large enough to be considered protected trees.

Eight (8) replacement trees are required and are depicted on the landscape plan. Please see the landscape section of this report for more information.

Items to be Addressed: *None.*

AREA, SETBACKS, BUILDING HEIGHT

The dimensional requirements of the C-2 / JROD districts are noted in table below:

	Required	Provided	Compliance
Lot Area	1 acre	1.38 acres	Compliant
Lot Width	150 feet	246.14 feet	Compliant
Building Setbacks			
Front (Zeeb Road)	40-foot greenbelt / building no more than 75 feet from greenbelt line	40-foot greenbelt / 74 f	Compliant
Side (north/south)	20 feet	85.8 feet/81.2 feet	Compliant
Rear (west)	50 feet	60.2 feet	Compliant
Parking Setbacks			
Front (Zeeb Road)	40 feet / 20 feet w/decorative wall	40.8 feet	Compliant
Side (north/south)	10 feet	10 feet / 10 feet	Compliant
Rear (west)	10 feet	NA	NA
Maximum Lot Coverage	15% (20%)	7%	Compliant
Maximum Floor Area	30% (40%)	7%	Compliant
Building Height	2 stories / 30 feet	1-story / 20 feet	Compliant

Items to be Addressed: *None.*

ESSENTIAL FACILITIES AND SERVICES

The site Is located In the Township's water and sewer district, and connections will be reviewed as part of the site plan process.

Items to be Addressed: *None.*

BUILDING AND SITE ARRANGEMENT

The building and site arrangement appears logical. The building is centrally located on the site with periphery parking/drive-through facilities along all sides. The site will utilize existing internal drives (Meijer) and will create an additional curb cut on Zeeb Road.

Items to be Addressed: *None.*

TRAFFIC / ACCESS

The site will be accessed via two (2) locations along the existing Meijer access drive, and a third location via cross access with the adjacent Scio Square development. We note the location of the access points along Meijer Drive will be in close proximity to the existing Scio Square drive and the main Zeeb Road entry. This will need to be further considered during site plan review.

Fire truck and garbage truck turning movements are provided on Sheets EX-1 and EX-2. The applicant is seeking a waiver for the required loading space noting: *Deliveries will occur once a week utilizing WB-62 Truck [semi] and daily dough deliveries utilizing a SU-30 Box Truck. The tenant des not require a physical loading zone their deliveries occur during off peak hours.* Turning templates for delivery vehicles are provided on Sheets EX-3 and EX-4.

Additionally, cross access easements will need to be documented with the neighboring properties as part of detail engineering approval.

An internal pedestrian connection is provided from the existing safety path along Zeeb Road to the main entry of the proposed structure. An internal pedestrian walkway is provided from the south parking lot area across the exit of the drive-through and from the north parking area to the main entry as well.

Items to be Addressed: *Provide cross access easement agreements on both the plan and easement documents as part of detail engineering review.*

PARKING / LOADING

Section 36-178(h) requires fast food restaurants to provide one (1) parking space for each 75 square feet of floor area.

	Required	Total Parking Provided
Fast Food (1 space per 75 SF floor area) 4,229/75 = 56 spaces	57	61
Barrier Free	3	3
Bicycle Parking	3	4
Loading	1	0

The applicant is required to provide 57 parking spaces. Sixty-one (61) spaces are provided, including the required barrier free spaces. The Planning Commission may grant a waiver to allow additional parking based on the standards of Section 36-278(g)(4) if the applicant can demonstrate additional parking is necessary. Our experience with the existing Panera Bread location indicates the additional parking will be needed.

All parking spaces and aisles are dimensioned in accordance with Section 36-278(i). One-way vehicular movements are demonstrated around the building allowing the 20-foot maneuvering lane width.

Loading: No loading space is depicted. Sheet C-3 indicates loading/unloading will occur during off-hours. The applicant should provide additional information regarding typical delivery timing.

Bicycle Parking: Section 36-278(j) requires *one (1) bicycle parking space must be provided for every 20 automobile parking spaces, with a minimum of two (2) required for all sites.* Three (3) bicycle parking spaces are required. Four (4) bicycle spaces are provided adjacent to the crosswalk from the internal pedestrian path to the safety path along Zeeb Road.

Stacking Spaces: As part of the conditional use approval, the Planning Commission approved 22 stacking spaces to accommodate drive-through and mobile pick-up lanes.

Items to be Addressed: *Planning Commission to consider parking waiver for four (4) additional parking spaces.*

LANDSCAPING

A separate landscape plan has been provided as part of the site plan submittal. The landscape plan has been sealed by a registered landscape architect.

Greenbelt (Jackson Road): *A 40-foot greenbelt shall contain the equivalent of one (1) tree and six (6) shrubs for every thirty (30) feet of frontage* for a total of ten (10) trees and sixty (60) shrubs. We note nine (9) trees, and 50 shrubs are provided in the greenbelt as required.

Interior Parking Lot Landscaping: *One (1) canopy tree is required for every eight (8) parking spaces; landscaped islands within a designated parking area shall be a minimum of 150 square feet in area and nine (9) feet in width.* Eight (8) interior parking lot trees are required and have been provided. All interior parking lot landscaping islands meet the minimum requirements of the ordinance.

Perimeter Parking Lot Landscaping: *Parking lots which are visible from a public road shall be screened from view with a landscaped berm varied in height from between two to three feet along the perimeter of those sides which are visible. The berm shall be planted with a minimum of one deciduous or evergreen tree and six deciduous or evergreen shrubs every 30 feet. The Planning commission, at its discretion, may approve alternative landscape plantings, such as a solid hedge, or a solid wall in lieu of a landscape berm.*

Nine (9) trees and 56 shrubs are provided in concert with the greenbelt plantings to meet the perimeter parking lot landscaping requirements. We note the trees are labeled as interior parking lot trees; however.

Foundation Landscaping: *Foundation plantings shall be provided along the front or sides of any buildings which face a public road and/or is adjacent to a parking lot or other area which provides access to the building by the general public. Foundation planting areas shall contain one (1) ornamental tree and six (6) shrubs per 30 lineal feet of applicable building frontage. Individual planting areas shall be a minimum of eight (8) feet in width.*

The proposed structure has 269 linear feet of building frontage visible from parking lots and public roads requiring nine (9) ornamental trees and 54 shrubs which have been provided. the foundation planting areas along the north and south elevations have been modified to meet the 8-foot width requirement.

General Site Landscaping: *In addition to any required screening; front greenbelt foundation landscaping and/or parking lot landscaping required 25% of the site area shall be landscaped.* Information provided on the landscape plan demonstrates 33% of the site will maintain general site landscaping.

Tree Replacement: As noted in the Natural Features section of this report, eight (8) replacement trees are required and have been provided.

Refuse Containers: A 2-bay dumpster enclosure is shown at the rear (northwest) of the property. Section 36-345(b)(9) requires all refuse containers to meet applicable setback requirements and be located behind the front face of the building away from public view. In the location proposed, the dumpster enclosure does not meet the required rear and side setbacks. Staff is researching how the Starbucks dumpster north of the site was treated.

Transformer Screening: A transformer pad is located in the southeast of the building in the drive-through island; 18-inch to 24-inch boxwood shrubs were originally proposed to screen the transformer. A 30-366-inch Holly shrub is proposed in the revised submittal better screen the transformer.

Equipment Screening: All proposed roof-mounted equipment will need to be screened. Metal screening is shown to screen proposed roof-mounted equipment.

Items to be Addressed: *CWA staff to research treatment of adjacent dumpster at Starbucks.*

LIGHTING

A lighting plan is provided on Sheet C-8. Six (6) pole-mounted and one (1) wall-mounted fixture are proposed. Illumination levels along all property lines do not exceed the maximum 0.3 foot-candles.

The light pole height is proposed at 16 feet which meets the requirements for parking lots having less than 100 spaces.

Items to be Addressed: *None.*

SIGNS

The building elevations demonstrate locations for future wall sign placement. We note areas along the north and west elevations provide locations for "wall mounted graphics". These areas will be counted toward wall signage area.

Details of a proposed monument sign are also provided on Sheet PP-4, and the placement of the monument sign has been provided on the revised plan set. The location of the monument sign meets required sign setbacks.

All signs will be reviewed at a future date under separate sign permit applications.

Items to be Addressed: *All signs to be reviewed in future under separate sign permit applications.*

FLOOR PLANS AND ELEVATIONS

Building floor plans have not been provided for review. Exterior materials include two (2) colors of utility size brick; a limestone sill, and fiberglass metal panels.

A color rendering has been provided for Planning Commission consideration.

Items to be Addressed: *None*

JROD STANDARDS

Section 36-76(f) outlines additional building design and orientation standards for structures in the JROD district. These include:

Facades
Section 36-76(f)(5)b. requires *facades greater than 100 feet in length, measured horizontally, shall incorporate projections or recesses extending at least 20% of the length of the façade. No uninterrupted length of any façade shall exceed 100 horizontal feet.* The structure does not contain any facades over 100 feet in length.

Ground Floor Facades
Section 36-76(f)(5)c. requires *ground floor facades that face public streets shall have arcades, display windows, entry areas, awnings, or other such features along no less than 50% of their horizontal length. Real windows allowing daylight in the building are encouraged.* We note the east building elevation is most visible from Zeeb Road has incorporated an awning and varying exterior materials (brick and fiberglass metal panels) and large bank of clear glazed windows are proposed to meet this requirement.

Roofs
A flat roof is proposed. A line-of-sight diagram should be provided demonstrating screening of roof-mounted equipment from Zeeb Road.

Building Materials and Colors
Section 36-76(f)(5)e. requires *(1) Predominant exterior building materials shall be high quality materials, including, but not limited to, brick, stone, architectural steel and glass, and integrally tinted/textured concrete masonry units. (2) all façade colors and systems (including neon) shall be reviewed and approved by the Planning Commission as part of the full site plan review process.* Color renderings have been provided for Planning Commission consideration.

All buildings shall have highly visible entrances featuring no less than three (3) of the design elements listed in Section 36-76(f)(5)f. We note the applicant is proposing a canopy, display windows, and an outdoor patio.

Items to be Addressed: *Planning Commission to evaluate proposed elevations in determining if JROD standards have been met.*

RECOMMENDATIONS

Based upon the information provided by the applicant and the comments of this analysis, the following items will need to be addressed prior to placement on a Planning Commission agenda:

1. CWA staff to research treatment of adjacent dumpster at Starbucks.

The following items will need to be considered by the Planning Commission or during detail engineering review:

1. Provide cross access easement agreements on both the plan and easement documents as part of detail engineering review.
2. Planning Commission to consider parking waiver for four (4) additional parking spaces.
3. All signs to be reviewed in future under separate sign permit applications.
4. Planning Commission to evaluate proposed elevations in determining if JROD standards have been met.

CARLISLE/WORTMAN ASSOC., INC.
Douglas J. Lewan, AICP
Executive Vice President

CARLISLE/WORTMAN ASSOC., INC.
Laura K. Kreps, AICP
Associate

#124-2133

cc: Scio Retail Management II, LLC via brandon@alrigusa.com

October 26, 2021
Revised: October 28, 2021

Scio Township, Michigan
827 N. Zeeb Road
Ann Arbor, MI 48103

GENERAL INFORMATION

Application No:	SP#21016	
Applicant:	Scio Retail Management II	
Project Name:	140 S Zeeb	
Plan Date:	September 22, 2021	
Location:	140 S Zeeb	
Parcel ID:	H-08-21-400-035	
Sewer Capacity:	Current REUs – 0.0	Required REUs – 5.3
Action Requested:	Conditional Use and Preliminary Site Plan Approval	

We have completed the first site plan review of the plans dated September 22, 2021, received by OHM Advisors on October 7, 2021.

A brief description of the project has been provided below, followed by our comments and a list of anticipated required permits and approvals.

At this time, the plans are not recommended for approval. The following comments were discussed at the Staff Review meeting scheduled on October 28, 2021 and shall be addressed prior to submitting for review.

PROJECT AND SITE DESCRIPTION

The applicant is proposing to construct a 4,229 square-foot drive-thru restaurant at 140 S Zeeb Road. The development will also consist of associated parking and landscaping improvements. A driveway connection is proposed between the proposed site and the existing commercial outlet to the north.

The applicant is proposing that the building be serviced with a water service and a sanitary service from the existing water main along the Meijer entrance drive and the existing sanitary sewer main along Zeeb Road. A fire protection line is also being proposed, as well as an oil-water separator connected to the sanitary sewer service. Stormwater will be collected on site and empty into an existing 36-in storm line to the north of the site.

SITE PLAN COMMENTS

STORMWATER MANAGEMENT

1. The applicant shall verify the correct Tc value was used to calculate Qp in Worksheet 10 of the detention calculations (Sheet C-6). The applicant shall review and revise all subsequent calculations accordingly.

OHM Advisors
34000 PLYMOUTH ROAD
LIVONIA, MICHIGAN 48150
T 734.522.6711
F 734.522.6427
OHM-Advisors.com

2. The applicant shall provide an inlet filter for the roof drain to the west of the building (Sheet C-9). Additionally, the applicant shall clarify if a structure is being proposed at the connection to the existing storm sewer at the northeast corner of the site. If not, an inlet filter is not needed at this location.

UTILITIES

3. The applicant shall provide a monitoring manhole for the proposed sanitary sewer service, as required by Scio Township Standards.

4. The applicant shall note that all sanitary sewer service line connections will be required to be made by directly tapping the existing sanitary sewer pipe. Connections to manholes are not allowed per Scio Township Standards.

5. The applicant shall note that a minimum of ten (10) feet of horizontal separation must be provided between all utilities, including water services. The applicant shall review and revise accordingly.

6. The applicant shall clarify the purpose of the structure in the northeast corner of the site within the greenbelt between Zeeb Road and the entrance drive.

SITE LAYOUT

7. The applicant shall clarify if a loading zone will be provided. If so, its location shall be shown on the plans. A truck turning template shall also be provided for the proposed loading zone, if applicable.

PRELIMINARY DETAILED ENGINEERING COMMENTS

These comments should be addressed by the applicant in the detailed engineering drawing submittal but do not affect the recommendation for approval to the Scio Township Planning Commission. It should be noted that this is not an all-inclusive list and more comments may be generated as new information is presented.

1. The applicant shall provide ramps at all pedestrian crossings. The applicant shall also provide spot elevations at all four (4) corners of all ramps, level landings, barrier-free parking spaces, and access aisles, as well as along all proposed sidewalk at 50-foot intervals. The cross-slope of these areas shall not exceed 2%, per ADA Standards.

2. The applicant shall provide verification that the existing 36" outlet pipe, and all subsequent downstream outlet pipes, have capacity for the additional stormwater runoff.

3. The applicant shall provide the direction of all inverts on the stormwater profiles (Sheet C-5) for clarity.

4. The applicant shall verify the velocity in the conveyance calculations (Sheet C-5) as there may be discrepancies.

5. It currently appears the pipe run between D-102 and D-103 may surcharge. The applicant shall review and revise accordingly.

6. The applicant shall verify the C-factor for Drainage Area D-201 (Sheet C-5) as there appears to be a discrepancy between the Drainage Area Map and the Conveyance Calculations.

7. The applicant shall provide a detail drawing and/or grading plan of the proposed spillways leading to inlet D-201.

8. The applicant shall provide the manufacturer's specification for the proposed HDPE as it is not a pre-approved storm sewer material based on the Scio Township Standards.

9. The applicant shall provide a certificate of outlet, signed and sealed by a registered engineer in the State of Michigan, on the plans.

10. The applicant shall label all proposed and existing utility easements.

11. The applicant shall note that all water service curb stop boxes and fire suppression valves must be located outside of the pavement, if possible.

12. The applicant shall provide a detail of the proposed grease trap on the plans.

13. The applicant shall provide concrete collars around catch basins and utility structures located in asphalt.

14. The applicant shall provide a cross-section detail for the concrete pad of the dumpster enclosure on the plans.

15. It is recommended that the applicant provide a minimum asphalt thickness of 4 inches to provide for ease of maintenance in the future.

16. The applicant shall include a brief project narrative on the cover sheet.

17. The applicant shall provide the legal description of the site on the plans and show the bearings on the plan view.

18. The applicant shall provide an engineer's estimate of probable cost for the project with the final detailed engineering submittal.

REQUIRED PERMITS & APPROVALS

The following outside agency reviews and permits will be required for the project. Copies of any correspondence between the applicant and the review agencies, as well as the permit or waiver, shall be sent to both the Township and this office.

- **Scio Township Board of Trustees (BOT):** After approval of the site plan by the Township Planning Commission, detailed engineering drawings are required and approvals from all applicable agencies will be required for BOT approval. Additional sewer REU's shall be requested, in writing, prior to the Board of Trustees granting approval.
- **Scio Township Fire Department:** Review and approval is required.
- **Scio Township Planning Consultant:** Review and approval is required.
- **Washtenaw County Road Commission (WCRC):** Review and approval of any proposed work within the Zeeb Road ROW is required.
- **Washtenaw County Water Resources Commissioner's Office (WCWRC):** Review and approval is required.
- **Washtenaw County SESC:** A permit will be required prior to construction.
- Other permits/approvals/etc. may be required.

It is noted that additional comments may be generated from information presented in future submittals. If you have any questions, please contact us at (734) 522-6711.

Sincerely,
OHM Advisors,

Sally L Bos

Sally L. Bos, P.E.

Stacie L Serdar

Stacie L. Serdar

SLB/SLS/seb

cc: Steve Wyzgoski, Township Utilities Director
Rich Hughes, Township Field Utilities Supervisor
Will Hathaway, Township Supervisor
Frances Szuma, Township Planning Coordinator
Kristy Aiken, Township Office Coordinator
Jessica Flintoft, Township Clerk
Andrew Houde, Township Fire Chief
Doug Lewan, CWA, Township Planner
Laura Kreps, CWA, Township Planner
Theresa Marsik, P.E., WCWRC
Gary Streight, P.E., WCRC
Jonathan Cooksey, P.E., Stonefield Engineering (via email)
Mitchell Harvey, Stonefield Engineering (via email)
Brandon Schram, Scio Retail Management II (via email)
File

P:\0126_0165\SITE_ScioTwp\2021\0159211060_140 S Zeeb_MUNI\01_CU-PSP & SP\SP#1\140 S Zeeb_SP#1_2021-10-26.docx

Scio Township Fire Department

From: Chief Houde

Date: October 26, 2021

RE: Scio Retail SP #21016

The fire department has no objections to the proposed site plan. We will require a Knox Box be installed on the building at a Fire Department approved location prior to occupancy.

Andy Houde, Fire Chief

Scio Township Fire Department

1055 N. Zeeb Rd., Ann Arbor, MI 48103-1472.
(734) 665-6001
(734) 665-0825 (fax)

STONEFIELD

November 3, 2021

Scio Township
827 North Zeeb Road
Ann Arbor, MI 48103

RE: Site Plan Approval
Proposed Fast Food Restaurant
Parcel ID: H-08-21-400-035
140 S. Zeeb Road
Township of Scio, Washtenaw County, Michigan

To Whom It May Concern:

Stonefield Engineering & Design, LLC is pleased to submit documents to address the comments contained in the Carlisle Wortman Associates, Inc. Review Letter dated, October 28, 2021, and OHM Advisors Review Letter dated, October 26, 2021. Please find the following items enclosed for review:

ITEM DESCRIPTION	*DATED*	*COPIES*	*PREPARED BY*
Site Development Plans	11-02-2021	8	Stonefield Engineering & Design
Site Development Plans (11 x 17)	11-02-2021	1	Stonefield Engineering & Design
Truck & Utility Exhibit	11-02-2021	1	Stonefield Engineering & Design
Check for Site Plan Resubmittal Review Fees-$978	11-02-2021	1	Scio Retail Management II, LLC
Electronic Flash Drive	11-02-2021	2	Stonefield Engineering & Design

The following is an itemized response to the comments contained within the Carlisle Wortman Associates, Inc. Review Letter dated, October 28, 2021:

RECOMMENDATIONS

Based upon the information provided by the applicant and the comments of this analysis, the following items will need to be addressed prior to placement on a Planning Commission agenda:

1. Provide all general information required on the site plan.

   All requested information has been included within the site plan.

   - **Adjacent zoning can be found on the Cover Sheet C-1**
   - **Adjacent owner information can be found on the Cover & Site Plan Sheets C-1 & C-3 respectively**
   - **NRCS Soil Information can be found on the Soil Erosion & Sediment Control Sheet C-9**

2. Provide additional information on deliveries - specifically timing, vehicle-type and maneuverability.

   Deliveries will occur once a week utilizing a WB-62 Truck and daily dough deliveries utilizing a SU-30 Box Truck. The tenant does not require a physical loading zone as their deliveries occur during off peak hours. Truck turning exhibits can be found within the *Site Development Plans.*

3. Provide a pedestrian walkway from the northern parking area to the main entry.

   Pedestrian walkway from northern parking area to the main entry has been provided as requested. Refer to Site Plan Sheet C-3.

4. Landscape plan to be signed and sealed by a registered landscape architect.

   Landscape plan has been signed and sealed by registered landscape architect. Refer to Sheet C-10.

5. Provide perimeter parking lot landscaping in addition to greenbelt plantings or Planning Commission to consider alternative.

   Perimeter parking lot landscaping and greenbelt landscape required plantings have been provided. Refer to Sheet C-10.

6. Provide foundation plantings areas 8 feet in width or Planning Commission to consider alternative.

   Foundation plantings along the south side of the building have been relocated to the north side within an 8' planting area. Refer to Sheet C-10.

7. Relocate dumpster enclosure to meet setback requirements or seek variance from Zoning Board of Appeals.

   Dumpster location has been shown to remain. Per Township Staff Report meeting on 10/28/2021, Carlisle – Wortman is looking into the Starbucks development to the north to see how they treated their enclosure location.

8. Provide taller plantings to screen transformer.

   Taller plantings have been provided to screen the transformer as requested. Refer to Sheet C-10.

9. Provide location of proposed monument sign on site plan.

   Monument sign location has been included within this submission. Refer to Sheet C-3.

The following is an itemized response to the comments contained within the OHM Review Letter dated, October 26, 2021:

Site Plan Comments:

Stormwater Management

1. The applicant shall verify the correct Tc value was used to calculate Qp in Worksheet 10 of the detention calculations (Sheet C-6). The applicant shall review and revise all subsequent calculations accordingly.

   Minimum 0.25 hours Tc value has been used to calculate Qp in Worksheet 10 on Sheet C-6.

2. The applicant shall provide an inlet filter for the roof drain to the west of the building (Sheet C-9). Additionally, the applicant shall clarify if a structure is being proposed at the connection to the existing storm sewer at the northeast corner of the site. If not, an inlet filter is not needed at this location.

   Inlet filter for roof drain has been provided as requested on Sheet C-9. The connection to the existing storm sewer will be a direct tap with no storm structure.

Utilities

3. The applicant shall provide a monitoring manhole for the proposed sanitary sewer service, as required by Scio Township Standards.

   A monitoring manhole for the proposed sanitary sewer service has been provided. Refer to Sheet C-7.

4. The applicant shall note that all sanitary sewer service line connections will be required to be made by directly tapping the existing sanitary sewer pipe. Connections to manholes are not allowed per Scio Township Standards.

   Sanitary sewer service has been revised to direct tap the existing sewer pipe as requested. Refer to Sheet C-7.

5. The applicant shall verify proper fire hydrant coverage is provided to the site. This office defers to the Scio Township Fire Department on the review and approval of hydrant coverage.

   Per Township Staff Report meeting 10/28/2021, the Fire Department has confirmed hydrant coverage is sufficient for this development.

6. The applicant shall note that a minimum of ten (10) feet of horizontal separation must be provided between all utilities, including water services. The applicant shall review and revise accordingly.

   Minimum 10' horizontal separation between all utilities have been provided as requested. Refer to Sheet C-7.

7. The applicant shall clarify the purpose of the structure in the northeast corner of the site within the greenbelt between Zeeb Road and the entrance drive.

   Structure in the northeast corner within the greenbelt is a Cable TV riser and has been labeled accordingly.

Site Layout

8. The applicant shall clarify if a loading zone will be provided. If so, its location shall be shown on the plans. A truck turning template shall also be provided for the proposed loading zone, if applicable.

   Loading zone is not proposed. The tenant delivers during off peak hours. Truck turning templates have been provided in the back of the *Site Development Plans*.

Preliminary Detailed Engineering Comments

These comments should be addressed by the applicant in the detailed engineering drawing submittal but do not affect the recommendation for approval to the Scio Township Planning Commission. It should be noted that this is not an all-inclusive list, and more comments may be generated as new information is presented.

1. The applicant shall provide ramps at all pedestrian crossings. The applicant shall also provide spot elevations at all four (4) corners of all ramps, level landings, barrier-free parking spaces, and access aisles, as well as along all proposed sidewalk at 50-foot intervals. The cross-slope of these areas shall not exceed 2%, per ADA Standards.

   Grade shots have been provided as requested. Refer to Sheet C-4.

2. The applicant shall provide verification that the existing 36" outlet pipe, and all subsequent downstream outlet pipes, have capacity for the additional stormwater runoff.

   Existing 36" outlet pipe capacity has been noted as 41.096 cfs per *Hennessey Design Plans Sheet C-11*.

3. The applicant shall provide the direction of all inverts on the stormwater profiles (Sheet C-5) for clarity.

   Invert directions for storm profiles have been included as requested. See Sheet C-5.

4. The applicant shall verify the velocity in the conveyance calculations (Sheet C-5) as there may be discrepancies.

   Velocity calculations have been provided using AutoCAD Hydraflow Storm Sewers. These calculations take manning's, pipe slope, and runoff rates into account. The velocity shown is above the 3-fps minimum and below the 10-fps maximum per Washtenaw County Water Resources Commissioner requirements.

5. It currently appears the pipe run between D-102 and D-103 may surcharge. The applicant shall review and revise accordingly.

   This was assuming that the pipes would be flowing full. Pipes have been revised to show flowing at bank full elevation of the Meijer basin to show HGL is below crown of pipes.

6. The applicant shall verify the C-factor for Drainage Area D-201 (Sheet C-5) as there appears to be a discrepancy between the Drainage Area Map and the Conveyance Calculations.

   C-factor has been revised as necessary. Refer to Sheet C-5.

7. The applicant shall provide a detail drawing and/or grading plan of the proposed spillways leading to inlet D-201.

   Detailed drawings will be provided for spillway into D-201 during engineering phase.

8. The applicant shall provide the manufacturer's specification for the proposed HDPE as it is not a pre- approved storm sewer material based on the Scio Township Standards.

   Manufacturer's specification for HDPE will be provided under a separate cover during engineering phase.

9. The applicant shall provide a certificate of outlet, signed and sealed by a registered engineer in the State of Michigan, on the plans.

   Certificate of outlet will be provided prior to final engineering approval.

10. The applicant shall label all proposed and existing utility easements.

    All utility easements are labeled accordingly.

11. The applicant shall note that all water service curb stop boxes and fire suppression valves must be located outside of the pavement, if possible.

    Shutoff valves have been relocated within landscape area behind curb as requested. Refer to Sheet C-7.

12. The applicant shall provide a detail of the proposed grease trap on the plans.

    Grease trap detail will be provided during engineering phase.

13. The applicant shall provide concrete collars around catch basins and utility structures located in asphalt.

    Concrete collars around catch basins and utility structures will be provided during engineering phase.

14. The applicant shall provide a cross-section detail for the concrete pad of the dumpster enclosure on the plans.

    Concrete pad / mat has been included within the construction details Sheet C-11.

15. It is recommended that the applicant provide a minimum asphalt thickness of 4 inches to provide for ease of maintenance in the future.

    Pavement cross section has been revised as requested. Refer to Sheet C-11.

16. The applicant shall include a brief project narrative on the cover sheet.

    Project narrative has been included on the cover sheet. Refer to Sheet C-1.

17. The applicant shall provide the legal description of the site on the plans and show the bearings on the plan view.

    Metes & bounds and legal description have been included on the Site Plan Sheet C-3 as requested.

18. The applicant shall provide an engineer's estimate of probable cost for the project with the final detailed engineering submittal.

    Engineer's cost estimate will be submitted under a separate cover during engineering phase.

Should you have any questions, please do not hesitate to contact our office.

Best regards,





Mitchell Harvey, PE
mharvey@stonefieldeng.com
Stonefield Engineering and Design

Michael Gold
mgold@stonefieldeng.com
Stonefield Engineering and Design

V:\DET\2020\DET-200325-Alrig-140 Zeeb Road, Scio Township, MI\Correspondence\Outgoing\City or Township\2021-11-03_Site Plan Response to Comments.docx

SITE DEVELOPMENT PLANS

FOR

140 S. ZEEB ROAD

PROPOSED FAST FOOD RESTAURANT

PARCEL ID: H-08-21-400-035

140 S. ZEEB ROAD

TOWNSHIP OF SCIO, WASHTENAW COUNTY, MICHIGAN 48103

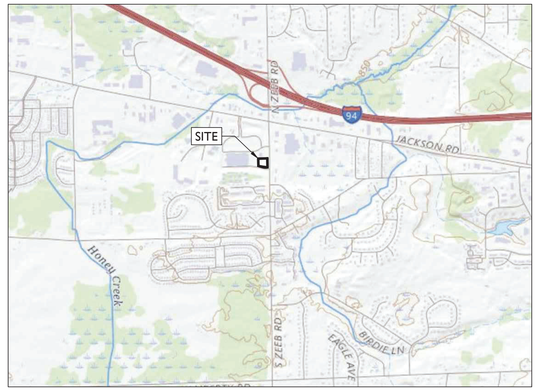

SOURCE: USGS ONLINE MAPS

LOCATION MAP

SCALE: 1" = 2,000'±



SOURCE: GOOGLE EARTH PRO

AERIAL MAP

SCALE: 1" = 200'±

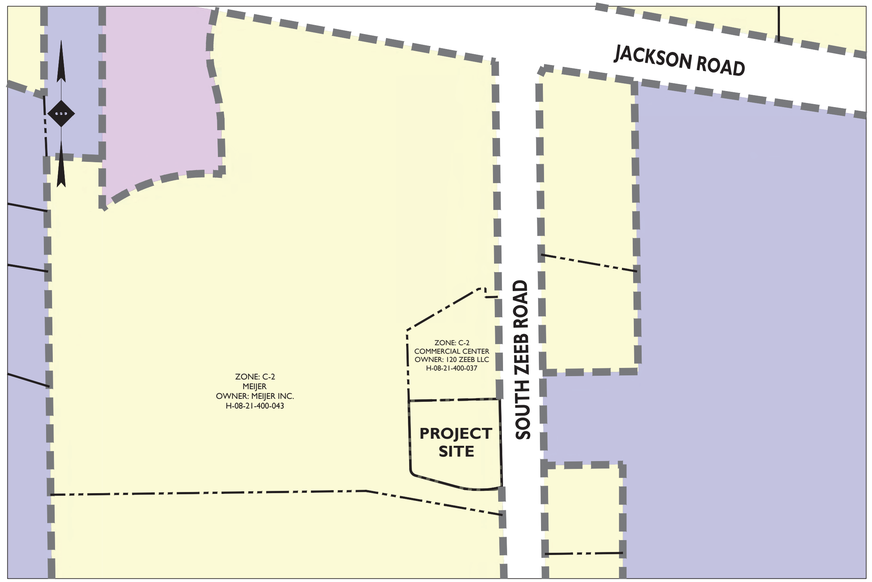

SOURCE: SCIO TOWNSHIP ZONING MAP

ZONING MAP

SCALE: 1" = 200'±

811

Know what's **below**
Call before you dig.

BENCHMARKS

BENCHMARK #1
CHISELED SQUARE ON TOP OF LIGHTPOLE BASE ALONG NORTH SIDE OF ENTRANCE, 109'± FROM WESTERLY RIGHT OF WAY LINE OF ZEEB ROAD.
ELEVATION = 878.20' (NAVD 88)

BENCHMARK #2
ARROW ON FIRE HYDRANT, 100'± NORTH OF NORTHWEST PROPERTY CORNER.
ELEVATION = 872.27' (NAVD 88)

PLANS PREPARED BY:

STONEFIELD engineering & design

Detroit, MI · Rutherford, NJ · New York, NY
Princeton, NJ · Tampa, FL · Boston, MA
www.stonefieldeng.com

607 Shelby Suite 200, Detroit, MI 48226
Phone 248.247.1115

PLAN REFERENCE MATERIALS:

1. **THIS PLAN SET REFERENCES THE FOLLOWING DOCUMENTS INCLUDING, BUT NOT LIMITED TO:**
   - **ALTA / NSPS LAND TITLE SURVEY PREPARED BY KEM-TEC, DATED 06/29/2021**
   - **ARCHITECTURAL PLANS PREPARED BY DETROIT ARCHITECTURAL GROUP, DATED 05/27/2021**
   - **GEOTECHNICAL REPORT PREPARED BY G2 CONSULTING GROUP, DATED 04/09/2021**
   - **LETTER OF INFILTRATION EVALUATION PREPARED BY G2 CONSULTING GROUP, DATED 07/13/2021**
   - **SCIO MEIJER OUTLOT DESIGN PLANS PREPARED BY HENNESSEY ENGINEERS, INC, DATED 09/23/2019**
   - **MEIJER #173 DESIGN PLANS PREPARED BY SSOE, INC, DATED 02/02/2007**
   - **AERIAL MAP OBTAINED FROM GOOGLE EARTH PRO**
   - **LOCATION MAP OBTAINED FROM USGS ONLINE MAPPER**
2. **ALL REFERENCE MATERIAL LISTED ABOVE SHALL BE CONSIDERED A PART OF THIS PLAN SET AND ALL INFORMATION CONTAINED WITHIN THESE MATERIALS SHALL BE UTILIZED IN CONJUNCTION WITH THIS PLAN SET. THE CONTRACTOR IS RESPONSIBLE TO OBTAIN A COPY OF EACH REFERENCE AND REVIEW IT THOROUGHLY PRIOR TO THE START OF CONSTRUCTION.**

SHEET INDEX

DRAWING TITLE	*SHEET #*
COVER SHEET	C-1
DEMOLITION PLAN	C-2
SITE PLAN	C-3
GRADING PLAN	C-4
STORMWATER MANAGEMENT & DRAINAGE AREA PLAN	C-5
STORMWATER MANAGEMENT CALCULATIONS	C-6
UTILITY PLAN	C-7
LIGHTING PLAN	C-8
SOIL EROSION & SEDIMENT CONTROL PLAN	C-9
LANDSCAPING PLAN	C-10
CONSTRUCTION DETAILS	C-11 & C-12

ADDITIONAL SHEET INDEX

DRAWING TITLE	*SHEET #*
2019 HENNESSEY STORMWATER DESIGN PLANS	C-11, C-13, & C-14
FIRE TRUCK CIRCULATION EXHIBIT	EX-1
TRASH TRUCK CIRCULATION EXHIBIT	EX-2
DELIVERY TRUCK (WB-62) CIRCULATION EXHIBIT	EX-3
DELIVERY TRUCK (SU-30) CIRCULATION EXHIBIT	EX-4
ALTA / NSPS LAND TITLE SURVEY	1 OF 1
SCIO TOWNSHIP GENERAL DETAILS	1 OF 1
SCIO TOWNSHIP SANITARY DETAILS	1 TO 2
SCIO TOWNSHIP STORM DETAILS	1 TO 2
SCIO TOWNSHIP WATER MAIN DETAILS	1 TO 2

PROJECT NARRATIVE:

PROPOSED COMMERCIAL DEVELOPMENT CONSISTING OF A 4,229 SF FAST-FOOD RESTAURANT WITH DRIVE-THRU FACILITIES ON THE 1.38 ACRE OUTLOT WITHIN THE OVERALL MEIJER COMMERCIAL CENTER. IMPROVEMENTS WILL INCLUDE ASSOCIATED PARKING LOT, LANDSCAPING, AND UNDERGROUND UTILITY INFRASTRUCTURE.

THE PROPOSED DEVELOPMENT IS COMPATIBLE WITH THE TOWNSHIPS GENERAL DEVELOPMENT PLAN FOR THE JACKSON ROAD OVERLAY AND GENERAL COMMERCIAL DISTRICT AS WELL AS THE SURROUNDING USES ALONG ZEEB ROAD.

APPLICANT / OWNER

SCIO RETAIL MANAGEMENT II LLC
30200 TELEGRAPH ROAD, SUITE 205
BINGHAM FARMS, MICHIGAN 48025
PHONE: 248-646-9999

ARCHITECT

DETROIT ARCHITECTURAL GROUP
1644 FORD AVENUE
WYANDOTTE, MICHIGAN 48192
PHONE: 734-556-3259

ISSUE	DATE	BY	DESCRIPTION
3.2	11/02/2021	MG	REVISED PER STAFF REPORT DATED 10/28/2021
3.1	10/05/2021	MPH	REVISED PER ASPHALT PARKING AREA
3	09/22/2021	MG	FOR SITE PLAN APPROVAL
2	05/12/2021	MH	FOR CONDITIONAL USE APPROVAL
1	04/01/2021	AF	FOR CLIENT REVIEW

NOT APPROVED FOR CONSTRUCTION

STONEFIELD engineering & design
Detroit, MI · Rutherford, NJ · New York, NY
Princeton, NJ · Tampa, FL · Boston, MA
www.stonefieldeng.com
607 Shelby Suite 200, Detroit, MI 48226
Phone 248.247.1115

SITE DEVELOPMENT PLAN

140 S. ZEEB ROAD
PROPOSED FAST FOOD RESTAURANT

PARCEL ID: H-08-21-400-035
140 S. ZEEB ROAD
TOWNSHIP OF SCIO
WASHTENAW COUNTY, MICHIGAN 48103

STATE OF MICHIGAN
JONATHAN FRED COOKSEY
ENGINEER
No. 6201064428
MICHIGAN LICENSE NO. 6201064428
LICENSED PROFESSIONAL ENGINEER

STONEFIELD engineering & design

SCALE: AS SHOWN | PROJECT ID: DET-200325

TITLE: COVER SHEET

DRAWING: C-1

V:\DET\2020\DET-200325-ALAN\C-140 ZEEB ROAD, SCIO TOWNSHIP, MI\CAD\PLOT\DET-PLT-COVR.DWG

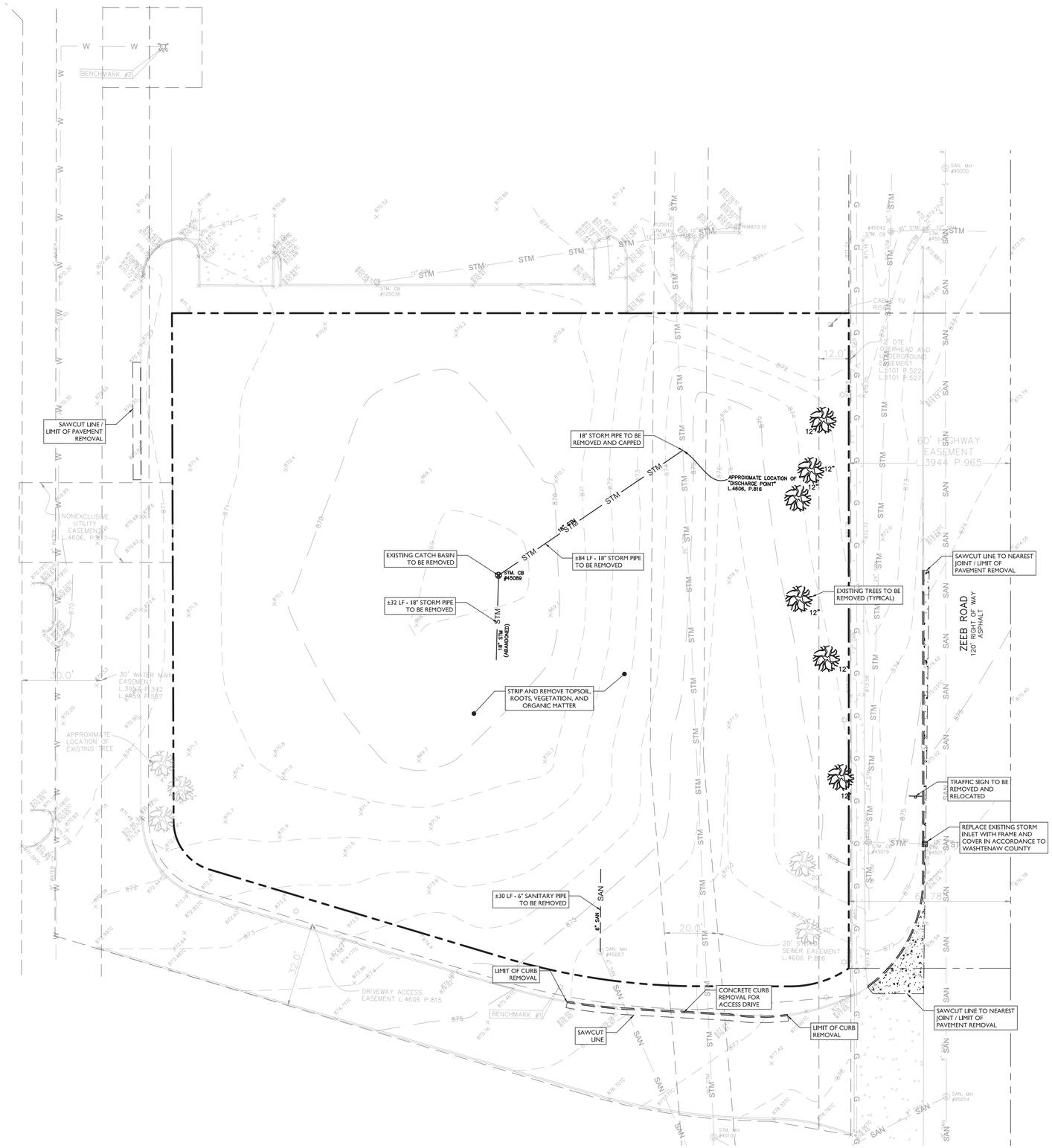

SYMBOL	DESCRIPTION
— — — — —	FEATURE TO BE REMOVED / DEMOLISHED

ALL SITE FEATURES WITHIN INDICATED ON THIS PLAN ARE TO REMAIN AND BE PROTECTED THROUGHOUT CONSTRUCTION UNLESS OTHERWISE NOTED. THE CONTRACTOR SHALL NOTIFY STONEFIELD ENGINEERING & DESIGN, LLC. IF SIGNIFICANT DISCREPANCIES ARE DISCERNED BETWEEN THIS PLAN AND FIELD CONDITIONS

811

Know what's **below**
Call before you dig.

DEMOLITION NOTES

1. THE WORK REFLECTED ON THE DEMOLITION PLAN IS TO PROVIDE GENERAL INFORMATION TOWARDS THE EXISTING ITEMS TO BE DEMOLISHED AND/OR REMOVED. THE CONTRACTOR IS RESPONSIBLE TO REVIEW THE ENTIRE PLAN SET AND ASSOCIATED REPORTS/REFERENCE DOCUMENTS INCLUDING ALL DEMOLITION ACTIVITIES AND INCIDENTAL TASKS NECESSARY TO COMPLETE THE SITE IMPROVEMENTS.
2. THE CONTRACTOR IS RESPONSIBLE TO DETERMINE THE MEANS AND METHODS OF DEMOLITION ACTIVITIES.
3. EXPLOSIVES SHALL NOT BE USED UNLESS WRITTEN CONSENT FROM BOTH THE OWNER AND ANY APPLICABLE GOVERNING AGENCY IS OBTAINED. BEFORE THE START OF ANY EXPLOSIVE PROGRAM, THE CONTRACTOR IS RESPONSIBLE TO OBTAIN ALL LOCAL, STATE, AND FEDERAL PERMITS. ADDITIONALLY, THE CONTRACTOR WILL BE RESPONSIBLE FOR ALL SEISMIC TESTING AS REQUIRED AND ANY DAMAGES AS THE RESULT OF SAID DEMOLITION PRACTICES.
4. ALL DEMOLITION ACTIVITIES SHALL BE PERFORMED IN ACCORDANCE WITH LOCAL, STATE, AND FEDERAL CODES. THE CONTRACTOR IS RESPONSIBLE FOR ENSURING ALL UTILITIES ARE DISCONNECTED IN ACCORDANCE WITH THE UTILITY AUTHORITY'S REQUIREMENTS PRIOR TO STARTING THE DEMOLITION OF ANY STRUCTURE. ALL EXCAVATIONS ASSOCIATED WITH DEMOLISHED STRUCTURES OR REMOVED TANKS SHALL BE BACKFILLED WITH SUITABLE MATERIAL AND COMPACTED TO SUPPORT SITE AND BUILDING IMPROVEMENTS. A GEOTECHNICAL ENGINEER SHOULD BE PRESENT DURING BACKFILLING ACTIVITIES TO OBSERVE AND CERTIFY THAT BACKFILL MATERIAL WAS COMPACTED TO A SUITABLE CONDITION.
5. DEMOLISHED DEBRIS SHALL NOT BE BURIED ON SITE. ALL WASTE/DEBRIS GENERATED FROM DEMOLITION ACTIVITIES SHALL BE DISPOSED OF IN ACCORDANCE WITH ALL LOCAL, STATE AND FEDERAL REQUIREMENTS. THE CONTRACTOR IS RESPONSIBLE TO MAINTAIN ALL RECORDS OF THE DISPOSAL TO DEMONSTRATE COMPLIANCE WITH THE ABOVE REGULATIONS.

30' 0' 30' 60'
GRAPHIC SCALE IN FEET
1" = 30'

ISSUE	DATE	BY	DESCRIPTION
3.2	11/02/2021	MG	REVISED PER STAFF REPORT DATED 10/28/2021
3.1	10/05/2021	MPH	REVISED PER ASPHALT PARKING AREA
3	09/22/2021	MG	FOR SITE PLAN APPROVAL
2	05/12/2021	MH	FOR CONDITIONAL USE APPROVAL
1	04/01/2021	AF	FOR CLIENT REVIEW

NOT APPROVED FOR CONSTRUCTION

STONEFIELD engineering & design
Detroit, MI · Rutherford, NJ · New York, NY
Princeton, NJ · Tampa, FL · Boston, MA
www.stonefieldeng.com
607 Shelby Suite 200, Detroit, MI 48226
Phone 248.247.1115

SITE DEVELOPMENT PLAN

140 S. ZEEB ROAD

PROPOSED FAST FOOD RESTAURANT

PARCEL ID: H-08-21-400-035
140 S. ZEEB ROAD
TOWNSHIP OF SCIO
WASHTENAW COUNTY, MICHIGAN 48103

JONATHAN REID COOKSEY — STATE OF MICHIGAN — ENGINEER — No. 6201069428 — LICENSE EXPIRATION DATE — PROFESSIONAL ENGINEER

STONEFIELD engineering & design

SCALE: 1" = 30' | PROJECT ID: DET-200325

TITLE: **DEMOLITION PLAN**

DRAWING: **C-2**

V:\DET\2020\DET-200325-ALEC - 140 ZEEB ROAD, (SCIO TOWNSHIP, MI)\CAD\PLOT\DP-02-DEMO.DWG

OFF-STREET PARKING REQUIREMENTS

CODE SECTION	REQUIRED	PROPOSED
§ 36-278.h	RESTAURANT (FAST FOOD): 1 SPACE PER 75 SF OF FLOOR AREA (4,229 SF)(1/75 SF) = 57 SPACES MAX.	61 SPACES (W)
§ 36-278.j	BICYCLE PARKING: ONE SPACE PER 20 PARKING SPACES	4 SPACES
§ 36-278.i.7	90° PARKING: 9 FT X 18 FT W/ 22 FT AISLE (TWO-WAY) 9 FT X 18 FT W/ 20 FT AISLE (ONE-WAY)	9 FT X 18 FT W/ 22 FT AISLE (TWO-WAY) 20 FT AISLE (ONE-WAY)
§ 36-280.4	REQUIRED STACKING SPACES: 8 SPACES 12 FT X 20 FT	23 SPACES 12 FT X 20 FT
§ 36-279.b	REQUIRED LOADING AREA: 1 SPACE 10 FEET FROM THE PROPERTY LINE	TO OCCUR OFF HOURS

(W) ADDITIONAL PARKING REQUESTED TO BE WAIVED BY PLANNING COMMISSION

LAND USE AND ZONING

PARCEL ID: H-08-21-400-035

GENERAL COMMERCIAL DISTRICT (C-2) & JACKSON ROAD OVERLAY DISTRICT (JROD)

PROPOSED USE

RESTAURANT W/ DRIVE-THRU — CONDITIONAL USE

ZONING REQUIREMENT	REQUIRED	PROPOSED
MINIMUM LOT AREA	1 ACRE (43,560 SF)	1.38 AC (60,223 SF)*
MINIMUM LOT WIDTH	150 FT	246.14 FT
MAXIMUM LOT DEPTH TO WIDTH RATIO	4:1 (4.0)	1.28
MAXIMUM LOT COVERAGE	15% (9,034 SF)(1)	7.0% (4,229 SF)
MAXIMUM FLOOR AREA COVERAGE	30% (18,067 SF)(1)	7.0% (4,229 SF)
MAXIMUM BUILDING HEIGHT	30 FT (2 STORIES)	20.0 FT (1 STORY)
MINIMUM FRONT YARD SETBACK	50 FT	115.0 FT
MAXIMUM FRONT YARD SETBACK (2)	115 FT	115.0 FT
MINIMUM SIDE YARD SETBACK (ONE)	20 FT	81.2 FT
MINIMUM SIDE YARD SETBACK (BOTH)	50 FT	167.0 FT
MINIMUM REAR YARD SETBACK	50 FT	60.2 FT
FRONT GREENBELT SETBACK (ZEEB)	40 FT	40.8 FT
MINIMUM SIDE/REAR YARD PARKING SETBACK	10 FT	10.0 FT
TRASH ENCLOSURE SETBACK		

* EXCLUDES ZEEB ROAD RIGHT-OF-WAY

(1) 36-75.12: MAXIMUM LOT COVERAGE AND MAXIMUM FLOOR AREA CAN BE INCREASED TO 20% AND 40% RESPECTIVELY, THROUGH TWO BEST MANAGEMENT PRACTICES

(2) 36-76.(f).(5).a: NEW PRINCIPAL STRUCTURES SHALL BE LOCATED NO MORE THAN 75 FT FROM GREENBELT LINE (40 FT GREENBELT + 75 FT = MAX. 115 FT SETBACK)

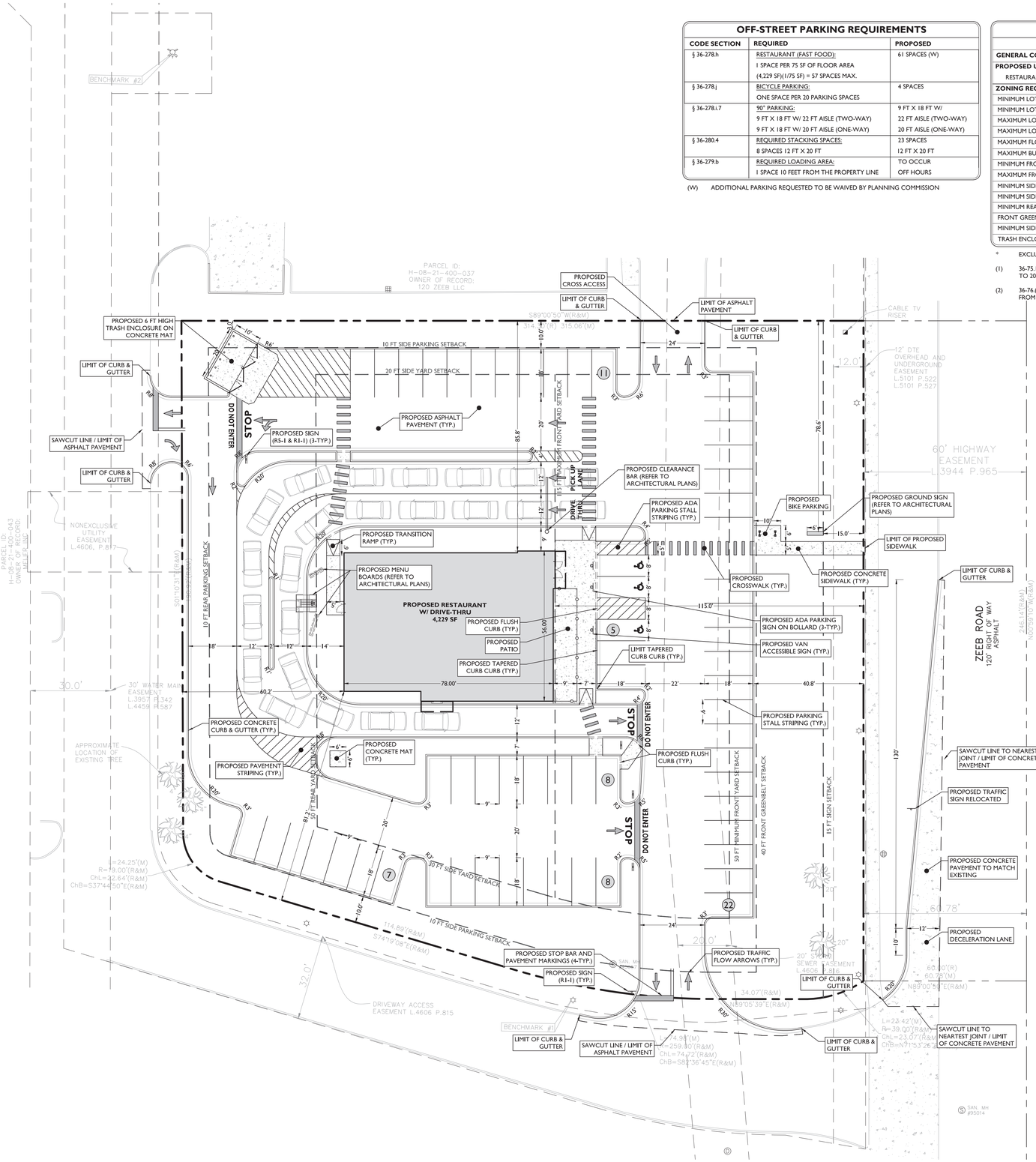

GENERAL NOTES

1. THE CONTRACTOR SHALL VERIFY AND FAMILIARIZE THEMSELVES WITH THE EXISTING SITE CONDITIONS AND THE PROPOSED SCOPE OF WORK (INCLUDING DIMENSIONS, LAYOUT, ETC.) PRIOR TO INITIATING THE IMPROVEMENTS IDENTIFIED WITHIN THESE DOCUMENTS. SHOULD ANY DISCREPANCY BE FOUND BETWEEN THE EXISTING SITE CONDITIONS AND THE PROPOSED WORK THE CONTRACTOR SHALL NOTIFY STONEFIELD ENGINEERING & DESIGN, LLC. PRIOR TO THE START OF CONSTRUCTION.
2. THE CONTRACTOR SHALL OBTAIN ALL NECESSARY PERMITS AND ENSURE THAT ALL REQUIRED APPROVALS HAVE BEEN OBTAINED PRIOR TO THE START OF CONSTRUCTION. COPIES OF ALL REQUIRED PERMITS AND APPROVALS SHALL BE KEPT ON SITE AT ALL TIMES DURING CONSTRUCTION.
3. ALL CONTRACTORS WILL, TO THE FULLEST EXTENT PERMITTED BY LAW, INDEMNIFY AND HOLD HARMLESS STONEFIELD ENGINEERING & DESIGN, LLC. AND ITS SUB-CONSULTANTS FROM AND AGAINST ANY DAMAGES AND LIABILITIES INCLUDING ATTORNEY'S FEES ARISING OUT OF CLAIMS BY EMPLOYEES OF THE CONTRACTOR IN ADDITION TO CLAIMS CONNECTED TO THE PROJECT AS A RESULT OF NOT CARRYING THE PROPER INSURANCE FOR WORKERS COMPENSATION, LIABILITY INSURANCE, AND LIMITS OF COMMERCIAL GENERAL LIABILITY INSURANCE.
4. THE CONTRACTOR SHALL NOT DEVIATE FROM THE PROPOSED IMPROVEMENTS IDENTIFIED WITHIN THIS PLAN SET UNLESS APPROVAL IS PROVIDED IN WRITING BY STONEFIELD ENGINEERING & DESIGN, LLC.
5. THE CONTRACTOR IS RESPONSIBLE TO DETERMINE THE MEANS AND METHODS OF CONSTRUCTION.
6. THE CONTRACTOR SHALL NOT PERFORM ANY WORK OR CAUSE DISTURBANCE ON A PRIVATE PROPERTY NOT CONTROLLED BY THE PERSON OR ENTITY WHO HAS AUTHORIZED THE WORK WITHOUT PRIOR WRITTEN CONSENT FROM THE OWNER OF THE PRIVATE PROPERTY.
7. THE CONTRACTOR IS RESPONSIBLE TO RESTORE ANY DAMAGED OR UNDERMINED STRUCTURE OR SITE FEATURE THAT IS IDENTIFIED TO REMAIN ON THE PLAN SET. ALL REPAIRS SHALL USE NEW MATERIALS TO RESTORE THE FEATURE TO ITS EXISTING CONDITION AT THE CONTRACTORS EXPENSE.
8. CONTRACTOR IS RESPONSIBLE TO PROVIDE THE APPROPRIATE SHOP DRAWINGS, PRODUCT DATA, AND OTHER REQUIRED SUBMITTALS FOR REVIEW. STONEFIELD ENGINEERING & DESIGN, LLC. WILL REVIEW THE SUBMITALS IN ACCORDANCE WITH THE DESIGN INTENT AS REFLECTED WITHIN THE PLAN SET.
9. THE CONTRACTOR IS RESPONSIBLE FOR TRAFFIC CONTROL IN ACCORDANCE WITH MANUAL ON UNIFORM TRAFFIC CONTROL DEVICES, LATEST EDITION.
10. THE CONTRACTOR IS REQUIRED TO PERFORM ALL WORK IN THE PUBLIC RIGHT-OF-WAY IN ACCORDANCE WITH THE APPROPRIATE GOVERNING AUTHORITY AND SHALL BE RESPONSIBLE FOR THE PROCUREMENT OF STREET OPENING PERMITS.
11. THE CONTRACTOR IS REQUIRED TO RETAIN AN OSHA CERTIFIED SAFETY INSPECTOR TO BE PRESENT ON SITE AT ALL TIMES DURING CONSTRUCTION & DEMOLITION ACTIVITIES.
12. SHOULD AN EMPLOYEE OF STONEFIELD ENGINEERING & DESIGN, LLC. BE PRESENT ON SITE AT ANY TIME DURING CONSTRUCTION, IT DOES NOT RELIEVE THE CONTRACTOR OF ANY OF THE RESPONSIBILITIES AND REQUIREMENTS LISTED IN THE NOTES WITHIN THIS PLAN SET.
13. SMOOTH TRANSITIONS ARE TO BE PROVIDED BETWEEN EXISTING AND PROPOSED PAVEMENTS & CURBING.

LEGAL DESCRIPTION

LAND SITUATED IN THE TOWNSHIP OF SCIO, COUNTY OF WASHTENAW, STATE OF MICHIGAN, DESCRIBED AS FOLLOWS:

PART OF THE SOUTHEAST 1/4 OF SECTION 21, TOWN 2 SOUTH, RANGE 5 EAST, SCIO TOWNSHIP, WASHTENAW COUNTY, MICHIGAN, DESCRIBED AS: BEGINNING AT A POINT ON THE EAST LINE OF THE SAID SOUTHEAST 1/4 WHICH IS NORTH 00 DEGREES 59 MINUTES 10 SECONDS WEST 434.94 FEET FROM THE SOUTHEAST 1/4 CORNER OF SECTION 21; THENCE CONTINUING NORTH 00 DEGREES 59 MINUTES 10 SECONDS WEST ALONG THE SAID EAST LINE, 246.14 FEET; THENCE SOUTH 89 DEGREES 00 MINUTES 50 SECONDS WEST 314.30 FEET; THENCE SOUTH 01 DEGREE 10 SECONDS 31 MINUTES EAST, 190.92 FEET; THENCE ALONG A CURVE TO THE LEFT WITH A RADIUS OF 19.00 FEET, A CENTRAL ANGLE OF 73 DEGREES 08 MINUTES 37 SECONDS AND A LONG CHORD BEARING AND DISTANCE OF SOUTH 37 DEGREES 44 MINUTES 50 SECONDS EAST, 22.64 FEET; THENCE SOUTH 74 DEGREES 19 MINUTES 08 SECONDS EAST, 114.89 FEET; THENCE ALONG A CURVE TO THE LEFT WITH A RADIUS OF 259.00 FEET, A CENTRAL ANGLE OF 16 DEGREES 35 MINUTES 13 SECONDS AND A LONG CHORD BEARING AND DISTANCE OF SOUTH 82 DEGREES 36 MINUTES 45 SECONDS EAST, 74.72 FEET; THENCE NORTH 89 DEGREES 05 MINUTES 39 SECONDS EAST, 34.07 FEET; THENCE ALONG A CURVE TO THE LEFT WITH A RADIUS OF 39.00 FEET, A CENTRAL ANGLE OF 34 DEGREES 24 MINUTES 25 SECONDS AND A LONG CHORD BEARING AND DISTANCE OF NORTH 71 DEGREES 53 MINUTES 26 SECONDS EAST, 23.07 FEET; THENCE NORTH 89 DEGREES 00 MINUTES 50 SECONDS EAST, 60.00 FEET TO THE POINT OF BEGINNING.

EASEMENT PARCELS:
TOGETHER WITH AND SUBJECT TO NONEXCLUSIVE EASEMENTS AS CREATED, LIMITED AND DEFINED IN THE NONEXCLUSIVE UTILITY EASEMENT AGREEMENT RECORDED IN LIBER 4606, PAGE 817.

TOGETHER WITH AND SUBJECT TO NONEXCLUSIVE EASEMENTS AS CREATED, LIMITED AND DEFINED IN THE NONEXCLUSIVE STORM WATER DISCHARGE AGREEMENT RECORDED IN LIBER 4606, PAGE 816.

TOGETHER WITH AND SUBJECT TO NONEXCLUSIVE EASEMENTS AS CREATED, LIMITED AND DEFINED IN THE NONEXCLUSIVE DRIVEWAY ACCESS EASEMENT AGREEMENT RECORDED IN LIBER 4606, PAGE 815

SYMBOL / DESCRIPTION

- PROPERTY LINE
- SETBACK LINE
- PROPOSED CURB & GUTTER
- PROPOSED FLUSH CURB
- PROPOSED CURB TRANSITION
- PROPOSED SIGNS / BOLLARDS
- PROPOSED BUILDING
- PROPOSED CONCRETE
- PROPOSED AREA LIGHT
- PROPOSED HANDRAIL
- PROPOSED BUILDING DOORS
- PROPOSED GROUND SIGN

GRAPHIC SCALE IN FEET
20' 0' 20' 40'
1" = 20'

ISSUE	DATE	BY	DESCRIPTION
3.2	11/02/2021	MG	REVISED PER STAFF REPORT DATED 10/28/2021
3.1	10/05/2021	MPH	REVISED PER ASPHALT PARKING AREA
3	09/22/2021	MG	FOR SITE PLAN APPROVAL
2	05/12/2021	MH	FOR CONDITIONAL USE APPROVAL
1	04/01/2021	AF	FOR CLIENT REVIEW

NOT APPROVED FOR CONSTRUCTION

STONEFIELD engineering & design
Detroit, MI · Rutherford, NJ · New York, NY
Princeton, NJ · Tampa, FL · Boston, MA
www.stonefieldeng.com
607 Shelby Suite 200, Detroit, MI 48226
Phone 248.247.1115

SITE DEVELOPMENT PLAN

140 S. ZEEB ROAD

PROPOSED FAST FOOD RESTAURANT

PARCEL ID: H-08-21-400-035
140 S. ZEEB ROAD
TOWNSHIP OF SCIO
WASHTENAW COUNTY, MICHIGAN 48103

STATE OF MICHIGAN — JONATHAN WINFIELD — COOKSEY — ENGINEER — 6201059428 — PROFESSIONAL ENGINEER

STONEFIELD engineering & design

SCALE: 1" = 20' | PROJECT ID: DET-200325

TITLE: SITE PLAN

DRAWING: C-3

V:\DET\2020\DET-200325-ALISG (4)\ 2ZEB ROAD, SCIO TOWNSHIP (MG)\SDP\PLOTS\SDP-03.SITE.DWG

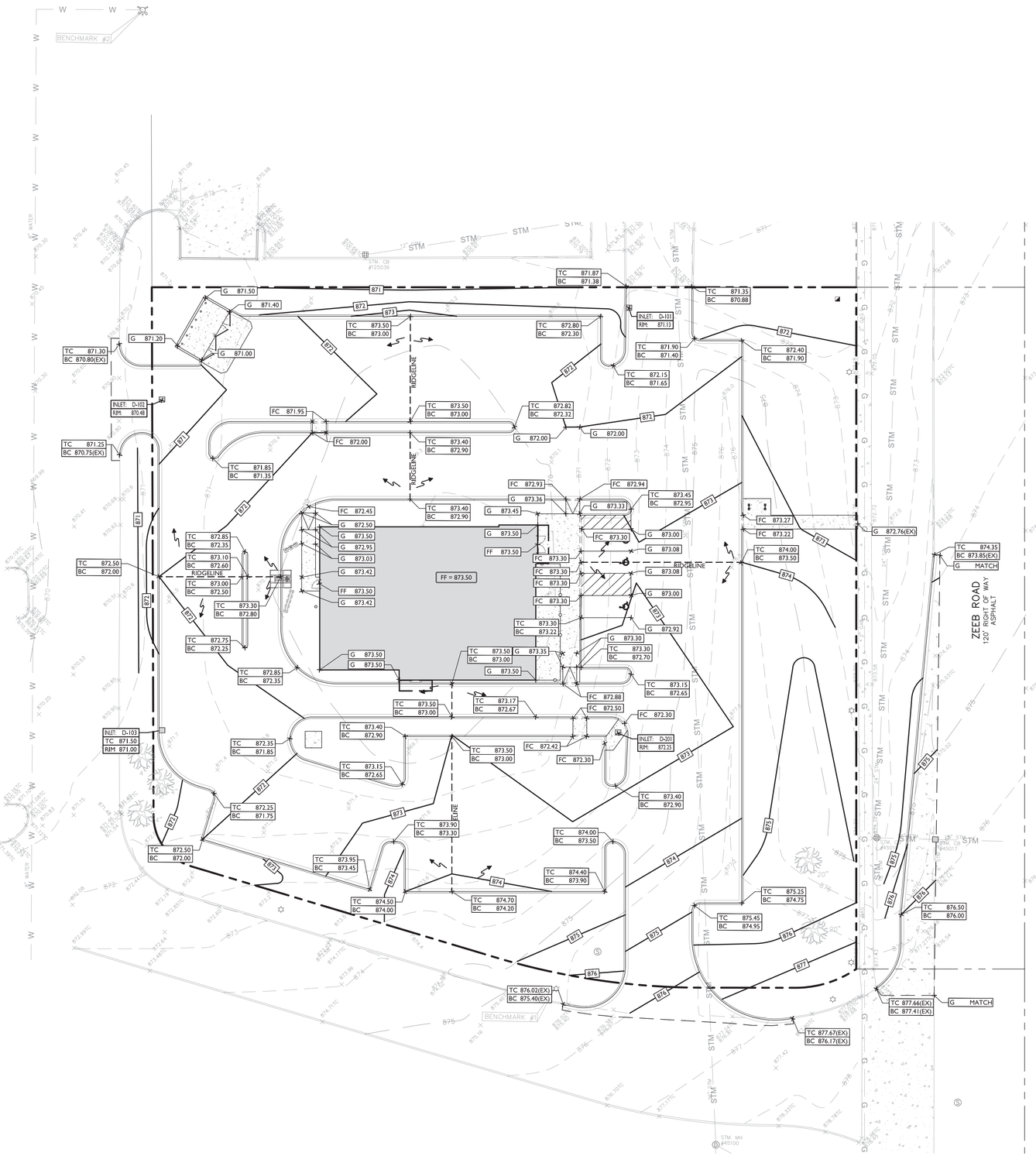

EXISTING MANHOLE SCHEDULE

NUM	TYPE	RIM (FT)	SIZE (IN)	DIR	INV ELEV (FT)
45017	STORM CB	875.68	15	E	870.98
		875.68	6	S	871.43
		875.68	12	W	870.88
45019	STORM CB	873.64	24	N	867.64
		873.64	12	E	870.14
		873.64	18	S	869.49
45040	STORM CB	872.31	12	E	867.01
		872.31	6	SW	867.51
		872.31	15	W	867.01
45042	STORM CB	870.47	36	N	863.47
		870.47	15	E	866.27
		870.47	24	S	864.17
45057	SANITARY MH	876.57	6	N	867.87
		876.57	6	S	867.72
45089	STORM CB	868.31	18	NE	863.81
		868.31	18	S	863.31
45100	STORM MH	877.33	36	N	864.78
		877.33	36	SE	868.13
		877.33	15	S	871.53
95000	SANITARY MH	871.11	8	N	856.24
		871.11	8	S	856.27
95014	SANITARY MH	878.24	8	SW	865.04
		878.24	8	N	863.32
		878.24	8	S	863.34
125012	STORM MH	870.71	36	N	861.96
		870.71	36	S	861.86
		870.71	12	SW	863.51
		870.71	12	NE	863.51
125036	STORM CB	870.08	12	NE	863.58

SYMBOL / DESCRIPTION

- PROPERTY LINE
- 100 — PROPOSED GRADING CONTOUR
- RIDGELINE — PROPOSED GRADING RIDGELINE
- PROPOSED DIRECTION OF DRAINAGE FLOW
- G 100.00 — PROPOSED GRADE SPOT SHOT
- TC 100.50 / BC 100.00 — PROPOSED TOP OF CURB / BOTTOM OF CURB SPOT SHOT
- FC 100.00 — PROPOSED FLUSH CURB SPOT SHOT
- INLET: D-100 / TC 100.50 / RIM 100.00 — PROPOSED STORM DEVICE SPOT SHOT
- TC 100.50(EX) / BC 100.00(EX) — EXISTING TOP OF CURB / BOTTOM OF CURB SPOT SHOT
- G 100.00(EX) — EXISTING GRADE SPOT SHOT

GRADING NOTES

1. ALL SOIL AND MATERIAL REMOVED FROM THE SITE SHALL BE DISPOSED OF IN ACCORDANCE WITH LOCAL, STATE, AND FEDERAL REQUIREMENTS. ANY GROUNDWATER DE-WATERING PRACTICES SHALL BE PERFORMED UNDER THE SUPERVISION OF A QUALIFIED PROFESSIONAL. THE CONTRACTOR IS REQUIRED TO OBTAIN ALL NECESSARY PERMITS FOR THE DISCHARGE OF DE-WATERED GROUNDWATER. ALL SOIL IMPORTED TO THE SITE SHALL BE CERTIFIED CLEAN FILL. CONTRACTOR SHALL MAINTAIN RECORDS OF ALL FILL MATERIALS BROUGHT TO THE SITE.
2. THE CONTRACTOR IS REQUIRED TO PROVIDE TEMPORARY AND/OR PERMANENT SHORING WHERE REQUIRED DURING EXCAVATION ACTIVITIES, INCLUDING BUT NOT LIMITED TO UTILITY TRENCHES, TO ENSURE THE STRUCTURAL INTEGRITY OF NEARBY STRUCTURES AND STABILITY OF THE SURROUNDING SOILS.
3. PROPOSED TOP OF CURB ELEVATIONS ARE GENERALLY 4 INCHES TO 7 INCHES ABOVE EXISTING GRADES UNLESS OTHERWISE NOTED. THE CONTRACTOR WILL SUPPLY ALL STAKEOUT CURB GRADE SHEETS TO STONEFIELD ENGINEERING & DESIGN, LLC. FOR REVIEW AND APPROVAL PRIOR TO POURING CURBS.
4. THE CONTRACTOR IS RESPONSIBLE TO SET ALL PROPOSED UTILITY COVERS AND RESET ALL EXISTING UTILITY COVERS WITHIN THE PROJECT LIMITS TO PROPOSED GRADE IN ACCORDANCE WITH ANY APPLICABLE MUNICIPAL, COUNTY, STATE AND/OR UTILITY AUTHORITY REGULATIONS.
5. MINIMUM SLOPE REQUIREMENTS TO PREVENT PONDING SHALL BE AS FOLLOWS:
   - CURB GUTTER: 0.50%
   - CONCRETE SURFACES: 1.00%
   - ASPHALT SURFACES: 1.00%
6. A MINIMUM SLOPE OF 1.00% SHALL BE PROVIDED AWAY FROM ALL BUILDINGS. THE CONTRACTOR SHALL ENSURE POSITIVE DRAINAGE FROM THE BUILDING IS ACHIEVED AND SHALL NOTIFY STONEFIELD ENGINEERING & DESIGN, LLC. IF THIS CONDITION CANNOT BE MET.
7. FOR PROJECTS WHERE BASEMENTS ARE PROPOSED, THE DEVELOPER IS RESPONSIBLE TO DETERMINE THE DEPTH TO GROUNDWATER AT THE LOCATION OF THE PROPOSED STRUCTURE. IF GROUNDWATER IS ENCOUNTERED WITHIN THE BASEMENT AREA, SPECIAL CONSTRUCTION METHODS SHALL BE UTILIZED AND REVIEWED/APPROVED BY THE CONSTRUCTION CODE OFFICIAL. IF SUMP PUMPS ARE UTILIZED, ALL DISCHARGES SHALL BE CONNECTED DIRECTLY TO THE PUBLIC STORM SEWER SYSTEM WITH APPROVAL FROM THE GOVERNING STORM SEWER SYSTEM AUTHORITY.

ADA NOTES

1. THE CONTRACTOR SHALL MAINTAIN A MAXIMUM 2.00% SLOPE IN ANY DIRECTION WITHIN THE ADA PARKING SPACES AND ACCESS AISLES.
2. THE CONTRACTOR SHALL PROVIDE COMPLIANT SIGNAGE AT ALL ADA PARKING AREAS IN ACCORDANCE WITH STATE GUIDELINES.
3. THE CONTRACTOR SHALL MAINTAIN A MAXIMUM 5.00% RUNNING SLOPE AND A MAXIMUM OF 2.00% CROSS SLOPE ALONG WALKWAYS WITHIN THE ACCESSIBLE PATH OF TRAVEL (SEE THE SITE PLAN FOR THE LOCATION OF THE ACCESSIBLE PATH). THE CONTRACTOR IS RESPONSIBLE TO ENSURE THE ACCESSIBLE PATH OF TRAVEL IS 36 INCHES WIDE OR GREATER UNLESS INDICATED OTHERWISE WITHIN THE PLAN SET.
4. THE CONTRACTOR SHALL MAINTAIN A MAXIMUM 2.00% SLOPE IN ANY DIRECTION AT ALL LANDINGS. LANDINGS INCLUDE, BUT ARE NOT LIMITED TO, THE TOP AND BOTTOM OF AN ACCESSIBLE RAMP, AT ACCESSIBLE BUILDING ENTRANCES, AT AN AREA IN FRONT OF A WALK-UP ATM, AND AT TURNING SPACES ALONG THE ACCESSIBLE PATH OF TRAVEL. THE LANDING AREA SHALL HAVE A MINIMUM CLEAR AREA OF 60 INCHES BY 60 INCHES UNLESS INDICATED OTHERWISE WITHIN THE PLAN SET.
5. THE CONTRACTOR SHALL MAINTAIN A MAXIMUM 8.33% RUNNING SLOPE AND A MAXIMUM 2.00% CROSS SLOPE ON ANY CURB RAMPS ALONG THE ACCESSIBLE PATH OF TRAVEL. WHERE PROVIDED, CURB RAMP FLARES SHALL NOT HAVE A SLOPE GREATER THAN 10.00% IF A LANDING AREA IS PROVIDED AT THE TOP OF THE RAMP. FOR ALTERATIONS, A CURB RAMP FLARES SHALL NOT HAVE A SLOPE GREATER THAN 8.33% IF A LANDING AREA IS NOT PROVIDED AT THE TOP OF THE RAMP. CURBS RAMPS SHALL NOT RISE MORE THAN 6 INCHES IN ELEVATION WITHOUT A HANDRAIL. THE CLEAR WIDTH OF A CURB RAMP SHALL BE NO LESS THAN 36 INCHES WIDE.
6. ACCESSIBLE RAMPS WITH A RISE GREATER THAN 6 INCHES SHALL CONTAIN COMPLIANT HANDRAILS ON BOTH SIDES OF THE RAMP AND SHALL NOT RISE MORE THAN 30" IN ELEVATION WITHOUT A LANDING AREA IN BETWEEN RAMP RUNS. LANDING AREAS SHALL ALSO BE PROVIDED AT THE TOP AND BOTTOM OF THE RAMP.
7. A SLIP RESISTANT SURFACE SHALL BE CONSTRUCTED ALONG THE ACCESSIBLE PATH AND WITHIN ADA PARKING AREAS.
8. THE CONTRACTOR SHALL ENSURE A MAXIMUM OF ¼ INCHES VERTICAL CHANGE IN LEVEL ALONG THE ACCESSIBLE PATH. WHERE A CHANGE IN LEVEL BETWEEN ¼ INCHES AND ½ INCHES EXISTS, CONTRACTOR SHALL ENSURE THAT THE TOP ¼ INCH CHANGE IN LEVEL IS BEVELED WITH A SLOPE NOT STEEPER THAN 1 UNIT VERTICAL AND 2 UNITS HORIZONTAL (2:1 SLOPE).
9. THE CONTRACTOR SHALL ENSURE THAT ANY OPENINGS (GAPS OR HORIZONTAL SEPARATION) ALONG THE ACCESSIBLE PATH SHALL NOT ALLOW PASSAGE OF A SPHERE GREATER THAN ½ INCH.

20' 0' 20' 40'

GRAPHIC SCALE IN FEET
1" = 20'

ISSUE	DATE	BY	DESCRIPTION
3.2	11/02/2021	MG	REVISED PER STAFF REPORT DATED 10/28/2021
3.1	10/05/2021	MPH	REVISED PER ASPHALT PARKING AREA
3	09/22/2021	MG	FOR SITE PLAN APPROVAL
2	05/12/2021	MH	FOR CONDITIONAL USE APPROVAL
1	04/01/2021	AF	FOR CLIENT REVIEW

NOT APPROVED FOR CONSTRUCTION

STONEFIELD engineering & design
Detroit, MI · Rutherford, NJ · New York, NY
Princeton, NJ · Tampa, FL · Boston, MA
www.stonefieldeng.com
607 Shelby Suite 200, Detroit, MI 48226
Phone 248.247.1115

SITE DEVELOPMENT PLAN

140 S. ZEEB ROAD

PROPOSED FAST FOOD RESTAURANT

PARCEL ID: H-08-21-400-035
140 S ZEEB ROAD
TOWNSHIP OF SCIO
WASHTENAW COUNTY, MICHIGAN 48103

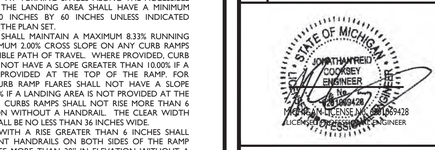

STONEFIELD engineering & design

SCALE: 1" = 20' | PROJECT ID: DET-200325

TITLE: GRADING PLAN

DRAWING: C-4

V:\DET\2020\DET-200325-ALANG-140 ZEEB ROAD, SCIO TOWNSHIP, MI\CAD\PLOT\DP-04-GRADING.DWG

10-YR STORMWATER SYSTEM DESIGN

Line #	Line ID	Rim Elevation Downstream (FT)	Rim Elevation Upstream (FT)	Invert Downstream (FT)	Invert Upsteam (FT)	Pipe Size (IN)	Pipe Length (FT)	Pipe Slope (%)	Q Required (CFS)	Pipe Capacity (CFS)	Velocity Downstream (FPS)	HGL Downstream (FT)	HGL Upstream (FT)	Drainage Area (AC)	Runoff Coefficient	Time of Concentration (MIN)	Rainfall Intensity (IN/HR)	Rim to HGL (FT)
1	OUTFALL TO D-101	871.00	871.13	863.56	863.74	15.0	18.0	1.00	4.28	7.63	5.65	864.23	864.58	0.35	0.71	16.40	4.23	6.55
2	D-101 TO D-102	871.13	870.48	863.84	865.56	12.0	172.0	1.00	1.95	4.21	3.58	864.58	866.16 j	0.21	0.81	15.60	4.31	4.32
3	D-102 TO D-103	870.48	871.00	865.66	866.86	12.0	120.0	1.00	1.24	4.21	3.31	866.16	867.33 j	0.35	0.81	15.00	4.38	3.67
4	D-101 TO D-201	871.13	872.25	866.72	868.25	12.0	153.0	1.00	1.36	4.21	4.15	867.11	868.74	0.47	0.66	15.00	4.38	3.51

Notes: j-line contains hyd. Jump

NOTE: 36" STORM PIPE CAPACITY = 41.096 CFS
PER HENNESSEY DESIGN PLAN SHEET C-11 DATED 09/23/2019

EXISTING MANHOLE SCHEDULE

NUM	TYPE	RIM (FT)	SIZE (IN)	DIR	INV ELEV (FT)
45017	STORM CB	875.68	15	E	870.98
		875.68	6	S	871.43
		875.68	12	W	870.88
45019	STORM CB	873.64	24	N	867.64
		873.64	12	E	870.14
		873.64	18	S	869.49
45040	STORM CB	872.31	12	E	867.01
		872.31	6	SW	867.51
		872.31	15	W	867.01
45042	STORM CB	870.47	36	N	863.47
		870.47	15	E	866.27
		870.47	24	S	864.17
45057	SANITARY MH	876.57	6	N	867.87
		876.57	6	S	867.72
45089	STORM CB	868.31	18	NE	863.81
		868.31	18	S	863.31
45100	STORM MH	877.33	36	N	864.78
		877.33	36	SE	868.13
		877.33	15	S	871.53
95000	SANITARY MH	871.11	8	N	856.24
		871.11	8	S	856.27
95014	SANITARY MH	878.24	8	SW	865.04
		878.24	8	N	863.32
		878.24	8	S	863.34
125012	STORM MH	870.71	36	N	861.96
		870.71	36	S	861.86
		870.71	12	SW	863.51
		870.71	12	NE	863.51
125036	STORM CB	870.08	12	NE	863.58

SYMBOL	DESCRIPTION
	PROPERTY LINE
100	PROPOSED GRADING CONTOUR
RIDGELINE	PROPOSED GRADING RIDGELINE
	PROPOSED STORMWATER STRUCTURES
	PROPOSED STORMWATER PIPING
	DRAINAGE AREAS

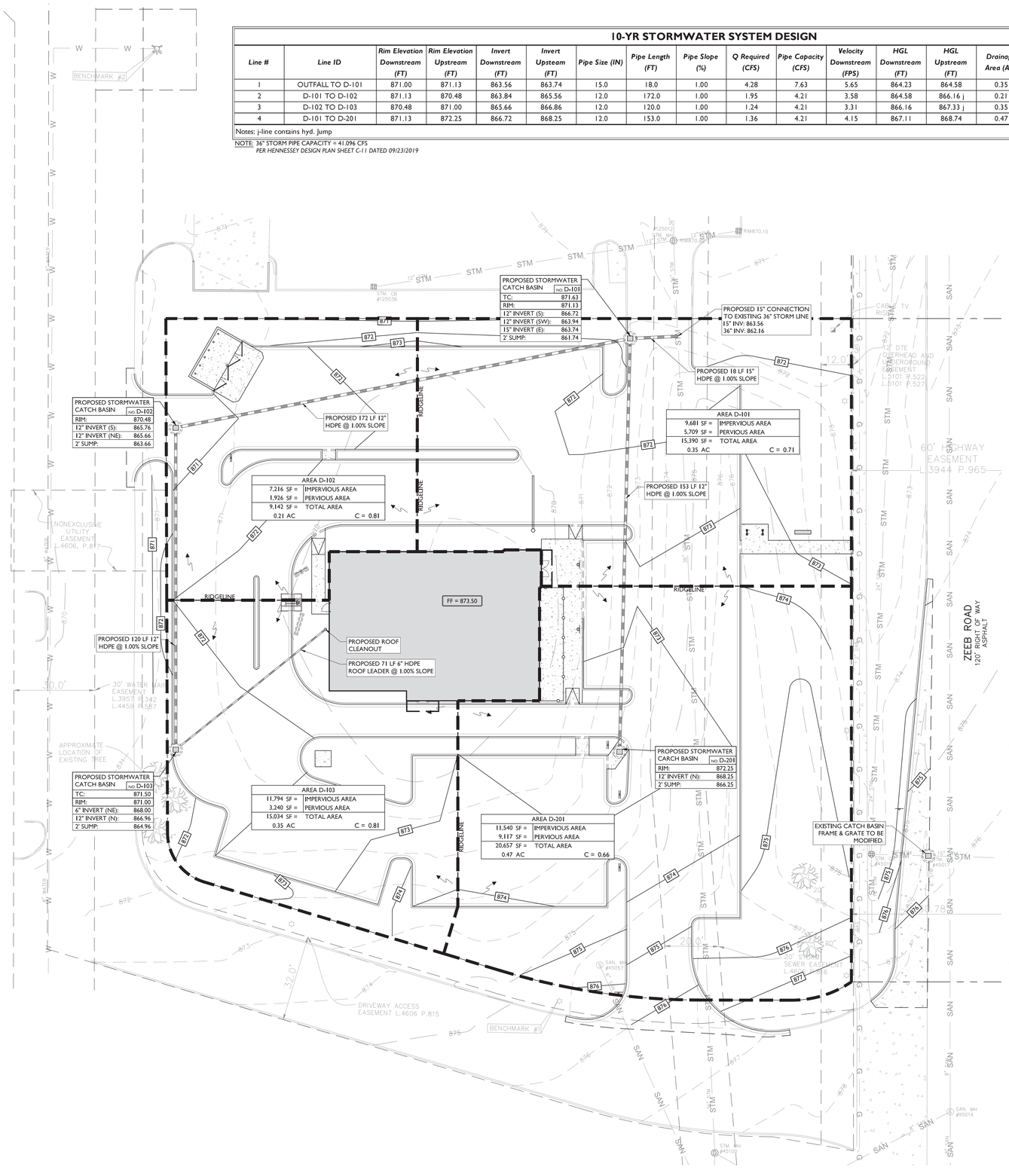

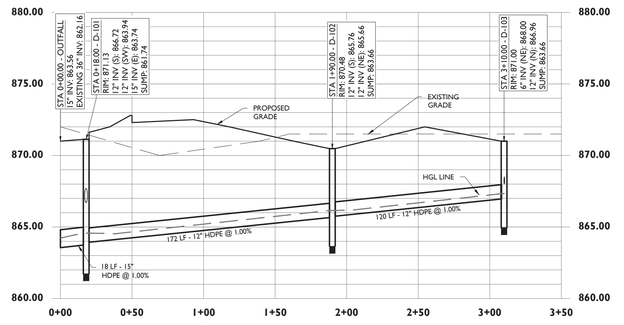

36" OUTFALL TO D-103 PROFILE

VERTICAL SCALE: 1" = 5'
HORIZONTAL SCALE: 1" = 50'

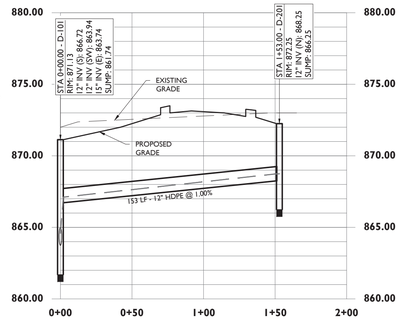

D-101 TO D-201 PROFILE

VERTICAL SCALE: 1" = 5'
HORIZONTAL SCALE: 1" = 50'

PROPOSED SITE STORMWATER SHALL FOLLOW CURRENT WASHTENAW COUNTY WATER RESOURCES COMISSIONER'S OFFICE RULES & REGULATIONS

DRAINAGE AND UTILITY NOTES

1. THE CONTRACTOR TO PERFORM A TEST PIT PRIOR TO CONSTRUCTION (RECOMMEND 30 DAYS PRIOR) AT LOCATIONS OF EXISTING UTILITY CROSSINGS FOR STORMWATER IMPROVEMENTS. SHOULD A CONFLICT EXIST, THE CONTRACTOR SHALL IMMEDIATELY NOTIFY STONEFIELD ENGINEERING & DESIGN, LLC. IN WRITING.
2. CONTRACTOR SHALL START CONSTRUCTION OF STORM LINES AT THE LOWEST INVERT AND WORK UP-GRADIENT.
3. THE CONTRACTOR IS REQUIRED TO CALL THE APPROPRIATE AUTHORITY FOR NOTICE OF CONSTRUCTION/EXCAVATION AND UTILITY MARK OUT PRIOR TO THE START OF CONSTRUCTION IN ACCORDANCE WITH STATE LAW. CONTRACTOR IS REQUIRED TO CONFIRM THE HORIZONTAL AND VERTICAL LOCATION OF UTILITIES IN THE FIELD. SHOULD A DISCREPANCY EXIST BETWEEN THE FIELD LOCATION OF A UTILITY AND THE LOCATION SHOWN ON THE PLAN SET OR SURVEY, THE CONTRACTOR SHALL NOTIFY STONEFIELD ENGINEERING & DESIGN, LLC. IMMEDIATELY IN WRITING.
4. THE CONTRACTOR IS RESPONSIBLE TO MAINTAIN A RECORD OF THE AS-BUILT LOCATIONS OF ALL PROPOSED UNDERGROUND INFRASTRUCTURE. THE CONTRACTOR SHALL NOTE ANY DISCREPANCIES BETWEEN THE AS-BUILT LOCATIONS AND THE LOCATIONS DEPICTED WITHIN THE PLAN SET. THIS RECORD SHALL BE PROVIDED TO THE OWNER FOLLOWING COMPLETION OF WORK.

EXCAVATION, SOIL PREPARATION, AND DEWATERING NOTES

1. THE CONTRACTOR IS REQUIRED TO REVIEW THE REFERENCED GEOTECHNICAL DOCUMENTS PRIOR TO CONSTRUCTION. THESE DOCUMENTS SHALL BE CONSIDERED A PART OF THE PLAN SET.
2. THE CONTRACTOR IS REQUIRED TO PREPARE SUBGRADE SOILS BENEATH ALL PROPOSED IMPROVEMENTS AND BACKFILL ALL EXCAVATIONS IN ACCORDANCE WITH RECOMMENDATIONS BY THE GEOTECHNICAL ENGINEER OF RECORD.
3. THE CONTRACTOR IS RESPONSIBLE FOR PROVIDING SHORING FOR ALL EXCAVATIONS AS REQUIRED. CONTRACTOR SHALL HAVE THE SHORING DESIGN PREPARED BY A QUALIFIED PROFESSIONAL SHORING DESIGNS. SHALL BE SUBMITTED TO STONEFIELD ENGINEERING & DESIGN, LLC. AND THE OWNER PRIOR TO THE START OF CONSTRUCTION.
4. THE CONTRACTOR IS RESPONSIBLE FOR ENSURING THAT ALL OPEN EXCAVATIONS ARE PERFORMED AND PROTECTED IN ACCORDANCE WITH THE LATEST OSHA REGULATIONS.
5. THE CONTRACTOR IS RESPONSIBLE FOR ANY DEWATERING DESIGN AND OPERATIONS, AS REQUIRED, TO CONSTRUCT THE PROPOSED IMPROVEMENTS. THE CONTRACTOR SHALL OBTAIN ANY REQUIRED PERMITS FOR DEWATERING OPERATIONS AND GROUNDWATER DISPOSAL.

20' 0' 20' 40'
GRAPHIC SCALE IN FEET
1" = 20'

ISSUE	DATE	BY	DESCRIPTION
3.2	11/02/2021	MG	REVISED PER STAFF REPORT DATED 10/28/2021
3.1	10/05/2021	MPH	REVISED PER ASPHALT PARKING AREA
3	09/22/2021	MG	FOR SITE PLAN APPROVAL
2	05/12/2021	MH	FOR CONDITIONAL USE APPROVAL
1	04/01/2021	AF	FOR CLIENT REVIEW

NOT APPROVED FOR CONSTRUCTION

STONEFIELD engineering & design
Detroit, MI · Rutherford, NJ · New York, NY
Princeton, NJ · Tampa, FL · Boston, MA
www.stonefieldeng.com
607 Shelby Suite 200, Detroit, MI 48226
Phone 248.247.1115

SITE DEVELOPMENT PLAN

140 S. ZEEB ROAD

PROPOSED FAST FOOD RESTAURANT

PARCEL ID: H-08-21-400-035
140 S. ZEEB ROAD
TOWNSHIP OF SCIO
WASHTENAW COUNTY, MICHIGAN 48103

STATE OF MICHIGAN
JONATHAN FRED COOKSEY
ENGINEER
No. 6201049428
LICENSE EXPIRES 10/31/2023
PROFESSIONAL ENGINEER

STONEFIELD engineering & design

SCALE: 1" = 20' | PROJECT ID: DET-200325

TITLE: STORMWATER MANAGEMENT & DRAINAGE AREA PLAN

DRAWING: C-5

V:\DET\2020\DET-200325-ALAN\C-140 ZEEB ROAD, SCIO TOWNSHIP\PLANS\DET\DET-SITE.DWG

2007 STORMWATER CALCULATIONS (PRE-DEVELOPMENT)

2007 WASHTENAW COUNTY 100-YR REQUIREMENTS
(EXISTING CONDITIONS)
(based on Washtenaw County Stormwater Management Regulations)

RATIONAL METHOD VARIABLES

Landcover	Area (SF)		C-Value*		Weighted Value
Building / Roof	0	x	0.95	=	0
Pavement / Hardscape	0	x	0.95	=	0
Open Space	60,223	x	0.25	=	15,056
Subtotals	60,223				15,056

**C-values obtained from Washtenaw County Water Resources Commissioner*

Composite C Value, C: 0.25

Site Area, A_t: 1.38 AC

100-YEAR FLOOD VOLUME

ALLOWABLE OUTFLOW: $Q = 0.15 \cdot (I)^{1.01}$

$Q_A = (0.15)(I)$

Allowable Outflow, Q_A: 0.21 CFS

$Q_D = Q_A / A * C$

Q_D: 0.65 *cfs / ac impervious*

STORAGE TIME: $T_{100} = -25 + (10,312.5 / Q)^{0.5}$

T_{100} (): 106.10 *minutes*

STORAGE VOLUME: $V_{100} = (16,500 * T_{100} / (T_{100} + 25)) - 68 * Q_D * T_{100}$

V_{100} (): 10,807 CF

DETENTION VOLUME REQUIRED: $V_{100} = V_{100} * A * C$

V_{100} (): 3,735 CF

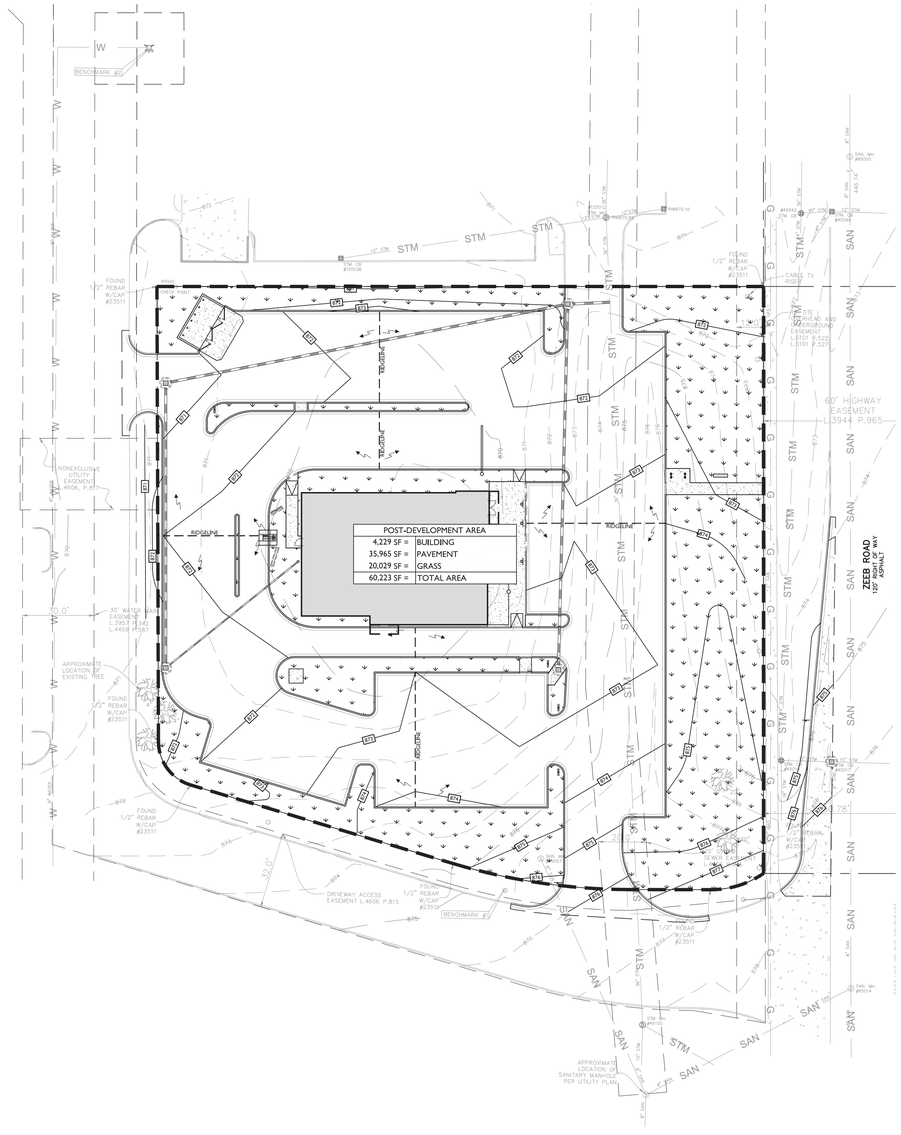

POST-DEVELOPMENT STORMWATER CALCULATIONS

WASHTENAW COUNTY STORMWATER CALCULATIONS
(Based on Washtenaw County Stormwater Management Regulations)

Project:	140 S. Zeeb Road, Scio Township	Designer:	MG	Date:	11/02/21

W1. DETERMINING POST-DEVELOPMENT COVER TYPES, AREAS, CURVE NUMBERS, AND RUNOFF COEFFICIENTS

RATIONAL METHOD VARIABLES *(REQUIRED FOR FIRST FLUSH RUNOFF CALCULATIONS)*

Landcover	Area (SF)		C-Value*		Weighted Value
Building / Roof	4,229	x	0.95	=	4,018
Pavement / Hardscape	35,965	x	0.95	=	34,167
Open Space	20,029	x	0.25	=	5,007
Subtotals	60,223				43,192

**C-values obtained from Washtenaw County Water Resources Commissioner*

Composite C Value, C_t: 0.72

Site Area, A_t: 1.38 AC

NRCS VARIABLES *(REQUIRED FOR BANKFULL & 100-YEAR RUNOFF CALCULATIONS)*

Cover Type (Pre-Development)	Soil Type	Area (SF)		Curve Number (CN)		Weighted Value
Meadow	B	60,223	x	58.0	=	3,492,934
Subtotals		60,223				3,492,934

Composite CN Value, CN: 58.00

Pervious Cover Type (Post-Development)	Soil Type	Area (SF)		Curve Number (CN)		Weighted Value
Fully Developed Open Space (Good Condition)	B	20,029	x	61.0	=	1,221,769
Subtotals		20,029				1,221,769

Composite CN Value, CN: 61.00

Impervious Cover Type (Post-Development)	Soil Type	Area (SF)		Curve Number (CN)		Weighted Value
Paved Parking Lots, Roofs, Driveways	B	40,194	x	98.0	=	3,939,012
Subtotals		40,194				3,939,012

Composite CN Value, CN: 98.00

W2. FIRST FLUSH RUNOFF CALCULATION (V_{FF})

$V_{FF} = (1 \text{ IN}) * (1 \text{ FT} / 12 \text{ IN}) * (43,560 \text{ SF}) * A * C$

Site Area, A_t: 1.38 AC

First Flush Runoff Volume, V_{FF}: **3,599 CF**

W3. PRE-DEVELOPMENT BANKFULL RUNOFF CALCULATION (V_{bfpre})

Rainfall Value (2 Year / 24 Hour Storm Event), P: 2.35 IN

$S = (1000 / CN) - 10$ — Function of Watershed Soil & Conditions, S: 7.24

$Q = (P-0.2*S)^2/(P+0.8*S)$ — Runoff, Q: 0.10 IN

**Site Area Excluding "Self Crediting" BMPs* — *Total Site Area: 60,223 SF

$V_{bfpre} = Q * (1/12) * \text{Area}$ — Pre-Development Bankfull Volume, V_{bfpre}: **501 CF**

W4. PERVIOUS COVER POST-DEVELOPMENT BANKFULL RUNOFF CALCULATION ($V_{bfperpost}$)

Rainfall Value (2 Year / 24 Hour Storm Event), P: 2.35 IN

$S = (1000 / CN) - 10$ — Function of Watershed Soil & Conditions, S: 6.39

$Q = (P-0.2*S)^2/(P+0.8*S)$ — Runoff, Q: 0.15 IN

Pervious Cover Area: 20,029 SF

$V_{bfperpost} = Q * (1/12) * \text{Area}$ — Pervious Cover Post Development Bankfull Volume, $V_{bfperpost}$: **257 CF**

W5. IMPERVIOUS COVER POST-DEVELOPMENT BANKFULL RUNOFF CALCULATION ($V_{bfimpost}$)

Rainfall Value (2 Year / 24 Hour Storm Event), P: 2.35 IN

$S = (1000 / CN) - 10$ — Function of Watershed Soil & Conditions, S: 0.20 IN

$Q = (P-0.2*S)^2/(P+0.8*S)$ — Runoff, Q: 2.12 IN

Impervious Cover Area: 40,194 SF

$V_{bfimpost} = Q * (1/12) * \text{Area}$ — Impervious Cover Post Development Bankfull Volume, $V_{bfimpost}$: **7,107 CF**

W6. PERVIOUS COVER POST-DEVELOPMENT 100 YEAR STORM RUNOFF CALCULATION ($V_{100perpost}$)

Rainfall Value (100 Year Storm Event), P: 5.11 IN

$S = (1000 / CN) - 10$ — Function of Watershed Soil & Conditions, S: 6.39 IN

$Q_{100perpost} = (P-0.2*S)^2/(P+0.8*S)$ — Runoff, $Q_{100perpost}$: 1.44 IN

Pervious Cover Area: 20,029 SF

$V_{100perpost} = Q * (1/12) * \text{Area}$ — Pervious Cover Post Development 100-Year Volume, $V_{100perpost}$: **2,396 CF**

W7. IMPERVIOUS COVER POST-DEVELOPMENT 100 YEAR STORM RUNOFF CALCULATION ($V_{100imppost}$)

Rainfall Value (100 Year Storm Event), P: 5.11 IN

$S = (1000 / CN) - 10$ — Function of Watershed Soil & Conditions, S: 0.20 IN

$Q_{100imp} = (P-0.2*S)^2/(P+0.8*S)$ — Runoff, Q_{100imp}: 4.87 IN

Impervious Cover Area: 40,194 SF

$V_{100imppost} = Q * (1/12) * \text{Area}$ — Impervious Cover Post Development 100-Yr Vol, $V_{100imppost}$: **16,322 CF**

W8. TIME OF CONCENTRATION FOR APPLICABLE FLOW TYPES ($T_{c\,max}$)

Flow Type	K	HEIGHT (H)	LENGTH (L)	%SLOPE% (S = 100%)	$S^{0.5}$	$V=K(S^{0.5})$	$T_C = L/(V*3,600)$ (hr)
Sheet Flow	0.48	1.5	28	5.36	2.31	1.11	0.007
Waterway	1.2	0.75	19	3.95	1.99	2.38	0.002
Waterway	1.2	1.75	47	3.72	1.93	2.32	0.006
Waterway	1.2	1.55	155	1.00	1.00	1.20	0.036
							T_C = 0.051

If T_C < 15 minutes use minimum Tc Below

Minimum T_C: **0.25** *hrs* = **15** *min*

W9. RUNOFF SUMMARY

First Flush Runoff Volume, V_{FF}:	3,599 CF
Pre-Development Bankfull Volume, V_{bfpre}:	**501 CF**
Pervious Cover Post Development Bankfull Volume, $V_{bfperpost}$:	257 CF
Impervious Cover Post Development Bankfull Volume, $V_{bfimpost}$:	7,107 CF
Total Bankfull Volume (V_{bfpost}):	**7,363 CF**
Pervious Cover Post Development 100-Year Storm Volume, $V_{100perpost}$:	2,396 CF
Impervious Cover Post Development 100-Year Storm Volume, $V_{100imppost}$:	16,322 CF
Total 100 Year Volume (V_{100}):	**18,718 CF**

ONSITE INFILTRATION REQUIREMENTS

$V_{bfdiff} = V_{bfpost} - V_{bfpre}$ — Bankfull Volume Difference, V_{bfdiff}: 6,862 CF

Onsite Infiltration Requirement:
Use the greater of Bankfull Volume Difference vs. First Flush Volume
**Basin to include additional 20% volume if required infiltration is not provided*

Onsite Infiltration Requirement, V_{inf}: **6,862 CF**
Bankfull Volume Difference

STORMWATER NARRATIVE:

METHODOLOGY IN ACCORDANCE WITH CURRENT STANDARDS OF THE WASHTENAW COUNTY WATER RESOURCES COMMISSIONER.

OVERALL REDEVELOPED AREA: ***1.38 ACRES***
DETENTION APPROVED IN 2019: ***511,502 CF***

BORINGS AND TEST PITS WERE TAKEN IN JULY 2021 IN CLOSE COORDINATION WITH WASHTENAW COUNTY WATER RESOURCES COMMISSIONER.

G2 CONSULTING GROUP PREPARED AN INFILTRATION EVALUATION AND SOIL INVESTIGATION REPORT DATED JULY 13, 2021, BETWEEN THEIR FINDINGS AND COMMUNICATION WITH THE WASHTENAW COUNTY WATER RESOURCES COMMISSIONER, IT WAS DETERMINED INFILTRATION WITHIN THE OUTLOT WAS NOT FEASIBLE.

THE SITE STORMWATER WILL BE COLLECTED WITHIN FOUR (4) SUB-DRAINAGE AREAS BEFORE ULTIMATELY DISCHARGING INTO MEIJER'S OVERALL SYSTEM.

THE METHODOLOGY APPROVED BY THE WATER RESOURCES COMMISSIONER IN DETERMINING THE TOTAL REQUIRED DETENTION VOLUME WAS TO ANALYZE THE REDEVELOPMENT AREA UNDER BOTH THE 2007 RULES IN WHICH THIS LOT WAS ORIGINALLY ACCOUNTED FOR AND THE CURRENT STANDARDS. THE DIFFERENCE IN VOLUME SHOWS THAT THE OVERALL DETENTION BASIN WAS DESIGNED WITH ADEQUATE STORAGE FOR THE REDEVELOPMENT OF THIS SITE.

PROVIDED DETENTION PRE-DEVELOPMENT:	*511,502 CF*
REQUIRED DETENTION PRE-DEVELOPMENT:	*488,486 CF*
REQUIRED DETENTION AFTER REDEVELOPMENT:	*507,088 CF*
AVAILABLE STORAGE AFTER REDEVELOPMENT:	*4,414 CF*

THE POST-DEVELOPMENT REQUIRED VOLUME IS LESS THAN WHAT HAS BEEN PROVIDED FOR THE OVERALL MEIJER CENTER. THEREFORE THE REDEVELOPMENT SITE STORMWATER MANAGEMENT SYSTEM ADEQUATELY MEETS THE CURRENT COUNTY STANDARD REQUIREMENTS.

W10. DETENTION REQUIREMENTS

$Q_p = 238.6*T_c^{-0.83}$ — Peak of the Unit Hydrograph, Q_p: 2.750 *CFS / IN-MI²*

**Site Area Excluding "Self Crediting" BMPs* — *Total Site Area: 1.38 AC

$Q_{100} = Q_{100perv} + Q_{100imp}$ — 100 Year Storm Runoff, Q_{100}: 6.31 IN

$PF = (Q_p * Q_{100} * \text{Area}) / 640$ — Peak Flow, PF: 37.48 CFS

$\Delta = PF - (0.15 * \text{Area})$ — Δ: 37.27 CFS

$V_{det} = (\Delta / PF) * V_{100}$ — Required Detention Volume, V_{det}: 18,615 CF

W13. SUMMARY

A. STORMWATER MANAGEMENT SUMMARY

Minimum Onsite Infiltration Requirement, V_{inf}: 6,862 CF

Provided Infiltration Volume: - CF

% Minimum Required Infiltration Provided: 0%

Net Required Detention Volume, V_{det}: 18,615 CF
V_{det} = Designed / Provided Infiltration Volume

B. DETENTION VOLUME INCREASE WITHOUT INFILTRATION

% Required Infiltration NOT Provided: 100%

*Net % Penalty (20% * % Required Infiltration NOT Provided):* 20%

Total Required Detention Volume, including penalty: **22,338 CF**
*[(100% * %Net Penalty) * Net Required Detention Volume]*

C. ON-SITE DETENTION VOLUME TO BE PROVIDED

2019 Provided Detention Volume for Existing Facility, $V_{100\ 2019\ PROV.\ SHOPPINGCENTER}$ ***511,502 CF***
**Per Hennessey Design Plans dated 09/23/2019*

2019 Required Detention 100-year Volume for Existing Redeveloped Facility, $V_{100\ 2019\ REQ.\ SHOPPINGCENTER}$ 488,486 CF
**Per Hennessey Design Plans dated 09/23/2019*

Required 100-Year Volume for re-developed area, $V_{100\ 2021\ SITE}$ + 22,338 CF

2007 100-Year Volume Accounted for re-developed area, $V_{100\ 2007\ SITE}$ - 3,735 CF

Required Detention Volume ***507,088 CF***
*[$V_{100\ 2019\ REQ.\ SHOPPINGCENTER}$ * $V_{100\ 2021\ SITE}$ - $V_{100\ 2007\ SITE}$]*

Remaining Overall Detention Volume: *2019 Provided Volume - 2021 Required Volume =* ***4,414 CF***

NO ON-SITE DETENTION REQUIRED

PROPOSED SITE STORMWATER SHALL FOLLOW CURRENT WASHTENAW COUNTY WATER RESOURCES COMMISSIONER'S OFFICE RULES & REGULATIONS

30' 0' 30' 60'
GRAPHIC SCALE IN FEET
1" = 30'

ISSUE	DATE	BY	DESCRIPTION
3.2	11/02/2021	MG	REVISED PER STAFF REPORT DATED 10/28/2021
3.1	10/05/2021	MPH	REVISED PER ASPHALT PARKING AREA
3	09/22/2021	MG	FOR SITE PLAN APPROVAL
2	05/12/2021	MH	FOR CONDITIONAL USE APPROVAL
1	04/01/2021	AF	FOR CLIENT REVIEW

NOT APPROVED FOR CONSTRUCTION

STONEFIELD engineering & design
Detroit, MI · Rutherford, NJ · New York, NY
Princeton, NJ · Tampa, FL · Boston, MA
www.stonefieldeng.com
607 Shelby Suite 200, Detroit, MI 48226
Phone 248.247.1115

SITE DEVELOPMENT PLAN

140 S. ZEEB ROAD

PROPOSED FAST FOOD RESTAURANT

PARCEL ID: H-08-21-400-035
140 S. ZEEB ROAD
TOWNSHIP OF SCIO
WASHTENAW COUNTY, MICHIGAN 48103

STATE OF MICHIGAN
JONATHAN REED COOKSEY
ENGINEER
No. 6201069428
LICENSE NO. 6201069428
PROFESSIONAL ENGINEER

STONEFIELD engineering & design

SCALE: 1" = 30' | PROJECT ID: DET-200325

TITLE: **STORMWATER MANAGEMENT CALCULATIONS**

DRAWING: **C-6**

V:\DET\2020\DET-200325-AA\BIG MI ZEEB ROAD, SCIO TOWNSHIP MICADD\PLOT\DP\DP-06-SWM.DWG

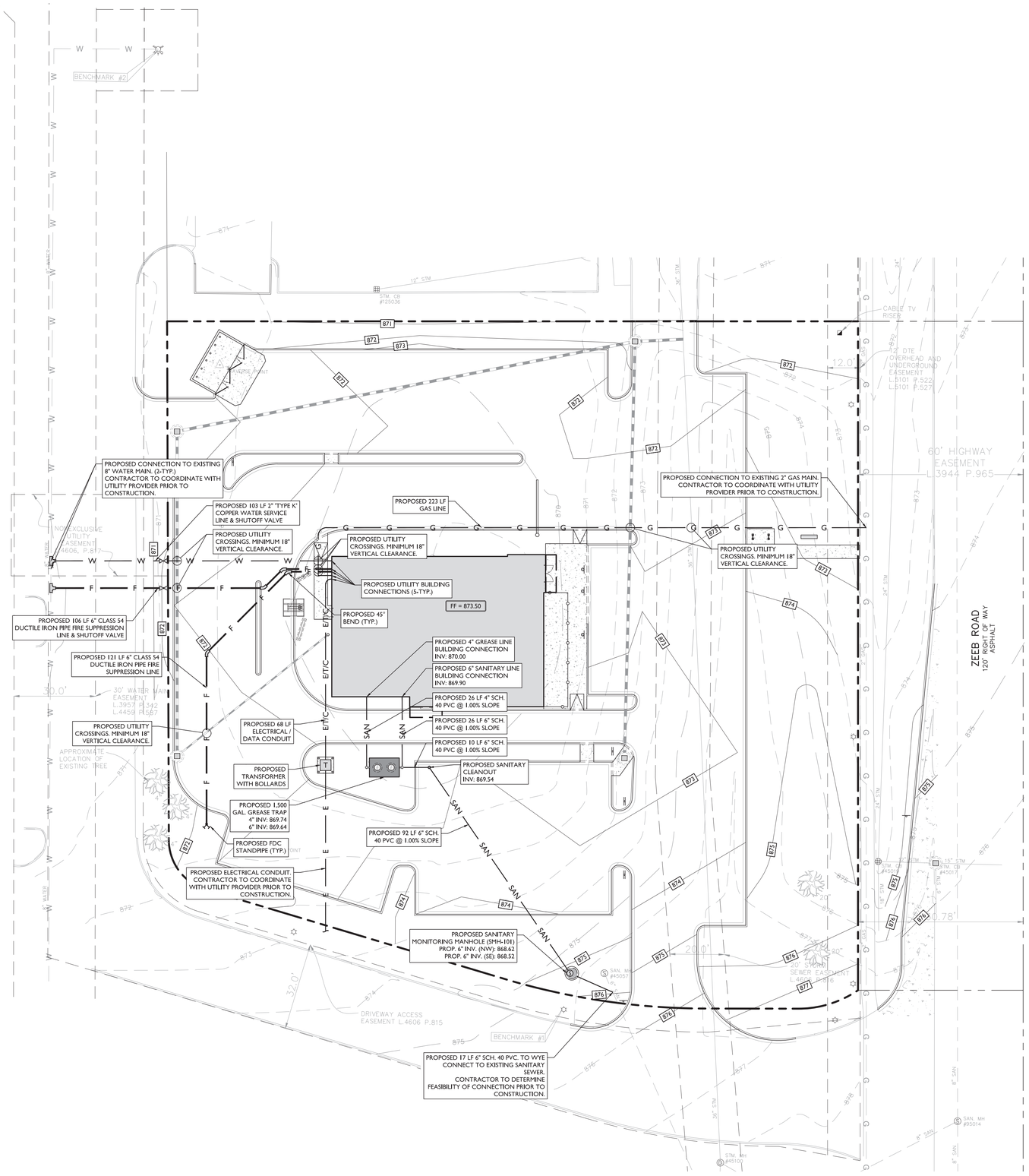

EXISTING MANHOLE SCHEDULE

NUM	TYPE	RIM (FT)	SIZE (IN)	DIR	INV ELEV (FT)
45017	STORM CB	875.68	15	E	870.98
		875.68	6	S	871.43
		875.68	12	W	870.88
45019	STORM CB	873.64	24	N	867.64
		873.64	12	E	870.14
		873.64	18	S	869.49
45040	STORM CB	872.31	12	E	867.01
		872.31	6	SW	867.51
		872.31	15	W	867.01
45042	STORM CB	870.47	36	N	863.47
		870.47	15	E	866.27
		870.47	24	S	864.17
45057	SANITARY MH	876.57	6	N	867.87
		876.57	6	S	867.72
45089	STORM CB	868.31	18	NE	863.81
		868.31	18	S	863.31
45100	STORM MH	877.33	36	N	864.78
		877.33	36	SE	868.13
		877.33	15	S	871.53
95000	SANITARY MH	871.11	8	N	856.24
		871.11	8	S	856.27
95014	SANITARY MH	878.24	8	SW	865.04
		878.24	8	N	863.32
		878.24	8	S	863.34
125012	STORM MH	870.71	36	N	861.96
		870.71	36	S	861.86
		870.71	12	SW	863.51
		870.71	12	NE	863.51
125036	STORM CB	870.08	12	NE	863.58

SANITARY SEWER BASIS OF DESIGN

AVERAGE FLOW CALCULATION

DESIGN FLOW BASED ON AVERAGE OF 100 GALLONS PER DAY PER PERSON
1 REU = 300 GPD PER PERSON
AVERAGE FLOW = REU x 3.0 PERSONS x 100 GPD
REU = AVERAGE FLOW / 300
TOTAL POPULATION (TP) = [TOTAL REU'S x 3.0] / 1000

FAST FOOD RESTAURANTS = 20 GPD PER SEAT

SITE DATA		AVERAGE FLOW	REU'S
RESTAURANT:	80 SEATS	80 SEATS (20 GPD / SEAT) =	
		1,600 GPD	**5.3 REU'S**
		0.0025 CFS	

PEAK FLOW CALCULATION

PEAK FLOW = [(18 + √(TP)) / (4 + √(TP))] x AVERAGE FLOW
TP = [5.3 x 3.0] / 1000 = 0.016

PEAK FLOW = 0.011 CFS

PIPE SIZE = 6 INCHES

SLOPE = 1.00%

CAPACITY AT 50% FULL = 0.332 CFS > 0.011 CFS
100% FULL = 0.663 CFS > 0.011 CFS

* BASED ON CITY OF ANN ARBOR'S "TABLE A" FLOW RATES

SYMBOL / DESCRIPTION

SYMBOL	DESCRIPTION
	PROPERTY LINE
SAN	PROPOSED SANITARY LATERAL
W	PROPOSED DOMESTIC WATER SERVICE
F	PROPOSED FIRE SUPPRESSION LINE
E/T/C	PROPOSED ELECTRICAL/DATA CONDUITS
E	PROPOSED ELECTRIC CONDUITS
G	PROPOSED GAS LINE
	PROPOSED VALVE
	PROPOSED WATER TEE / BEND
	PROPOSED SANITARY CLEANOUT
T	PROPOSED TRANSFORMER ON CONCRETE PAD WITH BOLLARDS

DRAINAGE AND UTILITY NOTES

1. THE CONTRACTOR IS REQUIRED TO CALL THE APPROPRIATE AUTHORITY FOR NOTICE OF CONSTRUCTION/EXCAVATION AND UTILITY MARK OUT PRIOR TO THE START OF CONSTRUCTION IN ACCORDANCE WITH STATE LAW. CONTRACTOR IS REQUIRED TO CONFIRM THE HORIZONTAL AND VERTICAL LOCATION OF UTILITIES IN THE FIELD. SHOULD A DISCREPANCY EXIST BETWEEN THE FIELD LOCATION OF A UTILITY AND THE LOCATION SHOWN ON THE PLAN SET OR SURVEY, THE CONTRACTOR SHALL NOTIFY STONEFIELD ENGINEERING & DESIGN, LLC IMMEDIATELY IN WRITING.
2. THE CONTRACTOR IS RESPONSIBLE TO PROTECT AND MAINTAIN IN OPERATION ALL UTILITIES NOT DESIGNATED TO BE REMOVED.
3. THE CONTRACTOR IS RESPONSIBLE FOR REPAIRING ANY DAMAGE TO ANY EXISTING UTILITY IDENTIFIED TO REMAIN WITHIN THE LIMITS OF THE PROPOSED WORK DURING CONSTRUCTION.
4. A MINIMUM HORIZONTAL SEPARATION OF 10 FEET IS REQUIRED BETWEEN ANY SANITARY SEWER SERVICE AND ANY WATER LINES. IF THIS SEPARATION CANNOT BE PROVIDED, A CONCRETE ENCASEMENT SHALL BE UTILIZED FOR THE SANITARY SEWER SERVICE AS APPROVED BY STONEFIELD ENGINEERING & DESIGN, LLC.
5. ALL WATER LINES SHALL BE VERTICALLY SEPARATED ABOVE SANITARY SEWER LINES BY A MINIMUM DISTANCE OF 18 INCHES. IF THIS SEPARATION CANNOT BE PROVIDED, A CONCRETE ENCASEMENT SHALL BE UTILIZED FOR THE SANITARY SEWER SERVICE AS APPROVED BY STONEFIELD ENGINEERING & DESIGN, LLC.
6. THE CONTRACTOR TO PERFORM A TEST PIT PRIOR TO CONSTRUCTION (RECOMMEND 30 DAYS PRIOR) AT LOCATIONS OF EXISTING UTILITY CROSSINGS FOR WATER AND SANITARY SEWER CONNECTION IMPROVEMENTS. SHOULD A CONFLICT EXIST, THE CONTRACTOR SHALL IMMEDIATELY NOTIFY STONEFIELD ENGINEERING & DESIGN, LLC. IN WRITING.
7. THE CONTRACTOR IS RESPONSIBLE FOR COORDINATING GAS, ELECTRIC AND TELECOMMUNICATION CONNECTIONS WITH THE APPROPRIATE GOVERNING AUTHORITY.
8. CONTRACTOR SHALL START CONSTRUCTION OF ANY GRAVITY SEWER AT THE LOWEST INVERT AND WORK UP-GRADIENT.
9. THE CONTRACTOR IS RESPONSIBLE TO MAINTAIN A RECORD SET OF PLANS REFLECTING THE LOCATION OF EXISTING UTILITIES THAT HAVE BEEN CAPPED, ABANDONED, OR RELOCATED BASED ON THE DEMOLITION/REMOVAL ACTIVITIES REQUIRED IN THIS PLAN SET. THIS DOCUMENT SHALL BE PROVIDED TO THE OWNER FOLLOWING COMPLETION OF WORK.
10. THE CONTRACTOR IS RESPONSIBLE TO MAINTAIN A RECORD OF THE AS-BUILT LOCATIONS OF ALL PROPOSED UNDERGROUND INFRASTRUCTURE. THE CONTRACTOR SHALL NOTE ANY DISCREPANCIES BETWEEN THE AS-BUILT LOCATIONS AND THE LOCATIONS DEPICTED WITHIN THE PLAN SET. THIS RECORD SHALL BE PROVIDED TO THE OWNER FOLLOWING COMPLETION OF WORK.

20' 0' 20' 40'
GRAPHIC SCALE IN FEET
1" = 20'

ISSUE	DATE	BY	DESCRIPTION
3.2	11/02/2021	MG	REVISED PER STAFF REPORT DATED 10/28/2021
3.1	10/05/2021	MPH	REVISED PER ASPHALT PARKING AREA
3	09/22/2021	MG	FOR SITE PLAN APPROVAL
2	05/12/2021	MH	FOR CONDITIONAL USE APPROVAL
1	04/01/2021	AF	FOR CLIENT REVIEW

NOT APPROVED FOR CONSTRUCTION

STONEFIELD engineering & design
Detroit, MI · Rutherford, NJ · New York, NY
Princeton, NJ · Tampa, FL · Boston, MA
www.stonefieldeng.com
607 Shelby Suite 200, Detroit, MI 48226
Phone 248.247.1115

SITE DEVELOPMENT PLAN

140 S. ZEEB ROAD

PROPOSED FAST FOOD RESTAURANT

PARCEL ID: H-08-21-400-035
140 S. ZEEB ROAD
TOWNSHIP OF SCIO
WASHTENAW COUNTY, MICHIGAN 48103

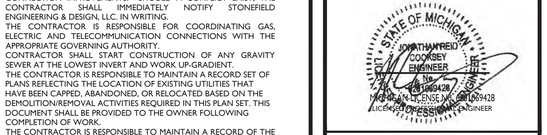

STONEFIELD engineering & design

SCALE: 1" = 20' | PROJECT ID: DET-200325

TITLE: UTILITY PLAN

DRAWING: C-7

V:\DET\2020\DET-200325-ALA\SC-140 ZEEB ROAD, SCIO TOWNSHIP, MI\CAD\PLOTS\DP-UTIL.DWG

ON SITE LIGHTING REQUIREMENTS

CODE SECTION	REQUIRED	PROPOSED
§ 36-315.(e)(4)(a)	MAXIMUM NON-RESIDENTIAL PROPERTY LINE LEVEL: 0.3 FC	0.3 FC
§ 36-315.(e)(4)(b)	MAXIMUM LEVEL BELOW FIXTURES: 25 FC	11.7 FC
§ 36-315.(e)(4)(b)	MAXIMUM LEVEL BETWEEN FIXTURES: 3 FC	PROVIDED
§ 36-315.(e)(5)	MAXIMUM POLE HEIGHT: 16 FT	16 FT

PROPOSED LUMINAIRE SCHEDULE

SYMBOL	LABEL	QUANTITY	SECURITY LIGHTING	DISTRIBUTION	LLF	MANUFACTURER	IES FILE
	A	1	EATON LUMARK PREVAIL AND FIXTURE COMBO WITH HOUSE SIDE SHIELD - 4000K	TYPE IV	0.9	EATON	PRV-C40-D-UNV-T4-BZ-7030-HSS.ies
	B	1	EATON LUMARK PREVAIL AND FIXTURE COMBO WITH HOUSE SIDE SHIELD - 4000K	TYPE II	0.9	EATON	PRV-C40-D-UNV-T2-BZ-7030-HSS.ies
	C	2	EATON LUMARK PREVAIL AND FIXTURE COMBO WITH HOUSE SIDE SHIELD (2@180°) - 4000K	TYPE IV	0.9	EATON	PRV-C40-D-UNV-T4-BZ-7030-HSS.ies
	D	2	EATON LUMARK PREVAIL AND FIXTURE COMBO WITH HOUSE SIDE SHIELD (2@180°) - 4000K	TYPE III	0.9	EATON	PRV-C15-D-UNV-T2-BZ-7030-HSS.ies
	E	1	EATON LUMARK XTOR CROSSTOUR MAXX LED WALLPACK - 4000K	TYPE III	0.9	EATON	XTORR8B.ies

SYMBOL	DESCRIPTION
A (XX')	PROPOSED LIGHTING FIXTURE (MOUNTING HEIGHT)
.XX	PROPOSED LIGHTING INTENSITY (FOOTCANDLES)

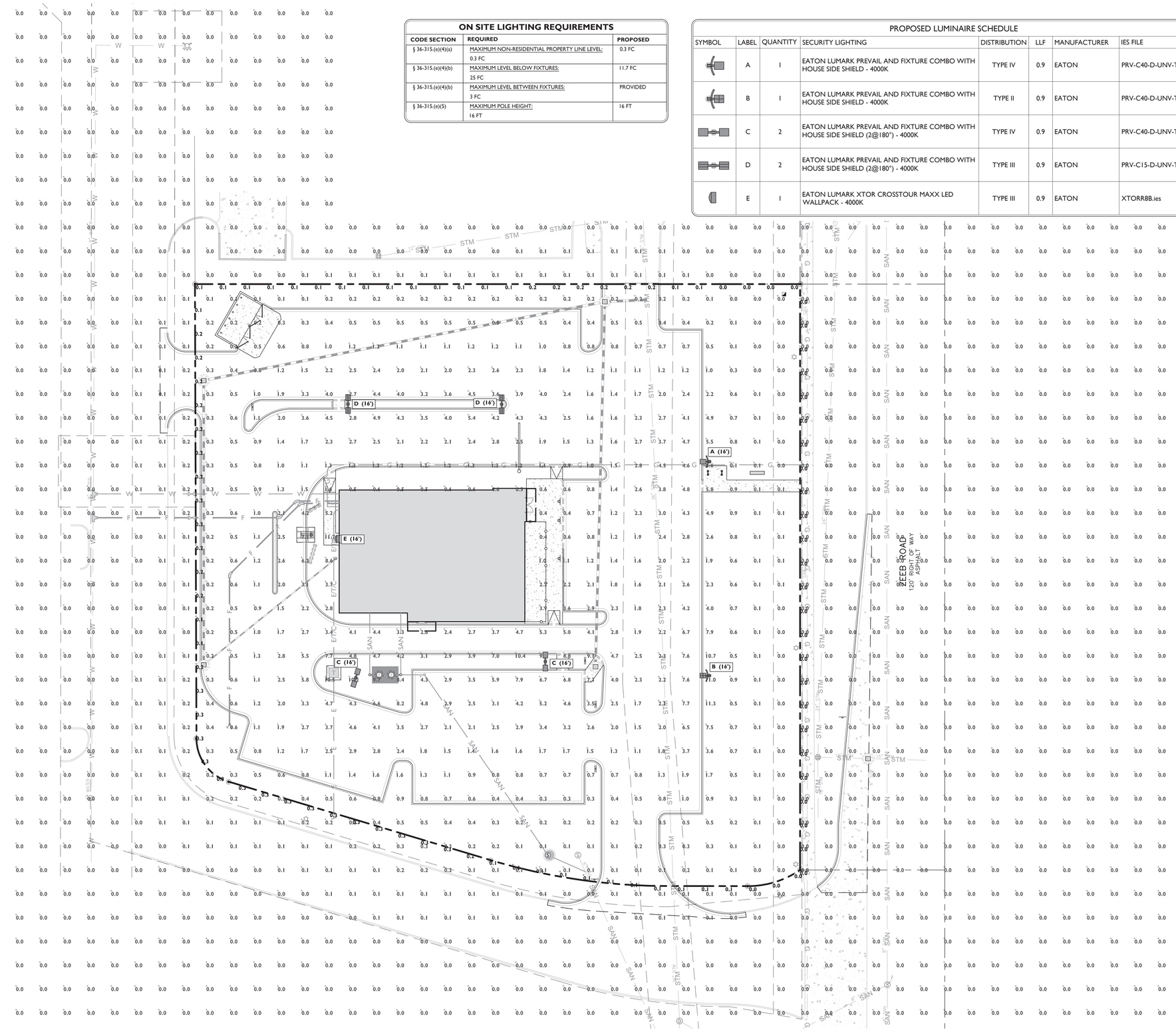

GENERAL LIGHTING NOTES

1. THE LIGHTING LEVELS DEPICTED WITHIN THE PLAN SET ARE CALCULATED UTILIZING DATA OBTAINED FROM THE LISTED MANUFACTURER. ACTUAL ILLUMINATION LEVELS AND PERFORMANCE OF ANY PROPOSED LIGHTING FIXTURE MAY VARY DUE TO UNCONTROLLABLE VARIABLES SUCH ARE WEATHER, VOLTAGE SUPPLY, LAMP TOLERANCE, EQUIPMENT SERVICE LIFE AND OTHER VARIABLE FIELD CONDITIONS.
2. WHERE APPLICABLE, THE EXISTING LIGHT LEVELS DEPICTED WITHIN THE PLAN SET SHALL BE CONSIDERED APPROXIMATE. THE EXISTING LIGHT LEVELS ARE BASED ON FIELD OBSERVATIONS AND THE MANUFACTURER'S DATA OF THE ASSUMED OR MOST SIMILAR LIGHTING FIXTURE MODEL.
3. UNLESS NOTED ELSEWHERE WITHIN THIS PLAN SET, THE LIGHT LOSS FACTORS USED IN THE LIGHTING ANALYSIS ARE AS FOLLOWS:
   - LIGHT EMITTING DIODES (LED): 0.90
   - HIGH PRESSURE SODIUM: 0.72
   - METAL HALIDE: 0.72
4. THE CONTRACTOR SHALL NOTIFY STONEFIELD ENGINEERING & DESIGN, LLC. IN WRITING, PRIOR TO THE START OF CONSTRUCTION, OF ANY PROPOSED LIGHTING LOCATIONS THAT CONFLICT WITH EXISTING/ PROPOSED DRAINAGE, UTILITY, OR OTHER IMPROVEMENTS.
5. THE CONTRACTOR IS RESPONSIBLE TO PREPARE A WIRING PLAN AND PROVIDE ELECTRIC SERVICE TO ALL PROPOSED LIGHTING FIXTURES. THE CONTRACTOR IS REQUIRED TO PREPARE AN AS-BUILT PLAN OF WIRING AND PROVIDE COPIES TO THE OWNER AND STONEFIELD ENGINEERING & DESIGN, LLC.

20' 0' 20' 40'
GRAPHIC SCALE IN FEET
1" = 20'

ISSUE	DATE	BY	DESCRIPTION
3.2	11/02/2021	MG	REVISED PER STAFF REPORT DATED 10/28/2021
3.1	10/05/2021	MPH	REVISED PER ASPHALT PARKING AREA
3	09/22/2021	MG	FOR SITE PLAN APPROVAL
2	05/12/2021	MH	FOR CONDITIONAL USE APPROVAL
1	04/01/2021	AF	FOR CLIENT REVIEW

NOT APPROVED FOR CONSTRUCTION

STONEFIELD engineering & design
Detroit, MI · Rutherford, NJ · New York, NY
Princeton, NJ · Tampa, FL · Boston, MA
www.stonefieldeng.com
607 Shelby Suite 200, Detroit, MI 48226
Phone 248.247.1115

SITE DEVELOPMENT PLAN

140 S. ZEEB ROAD

PROPOSED FAST FOOD RESTAURANT

PARCEL ID: H-00-21-400-035
140 S. ZEEB ROAD
TOWNSHIP OF SCIO
WASHTENAW COUNTY, MICHIGAN 48103

STATE OF MICHIGAN
JONATHAN REID COOKSEY
ENGINEER
No. 6201069428
LICENSE NO. 6201069428
PROFESSIONAL ENGINEER

STONEFIELD engineering & design

SCALE: 1" = 20' | PROJECT ID: DET-200325

TITLE: LIGHTING PLAN

DRAWING: C-8

V:\DET\2020\DET-200325-AutoCAD\140 S. ZEEB ROAD, SCIO TOWNSHIP, MI\CAD\PLOTS\DP-08-LIGHT.DWG

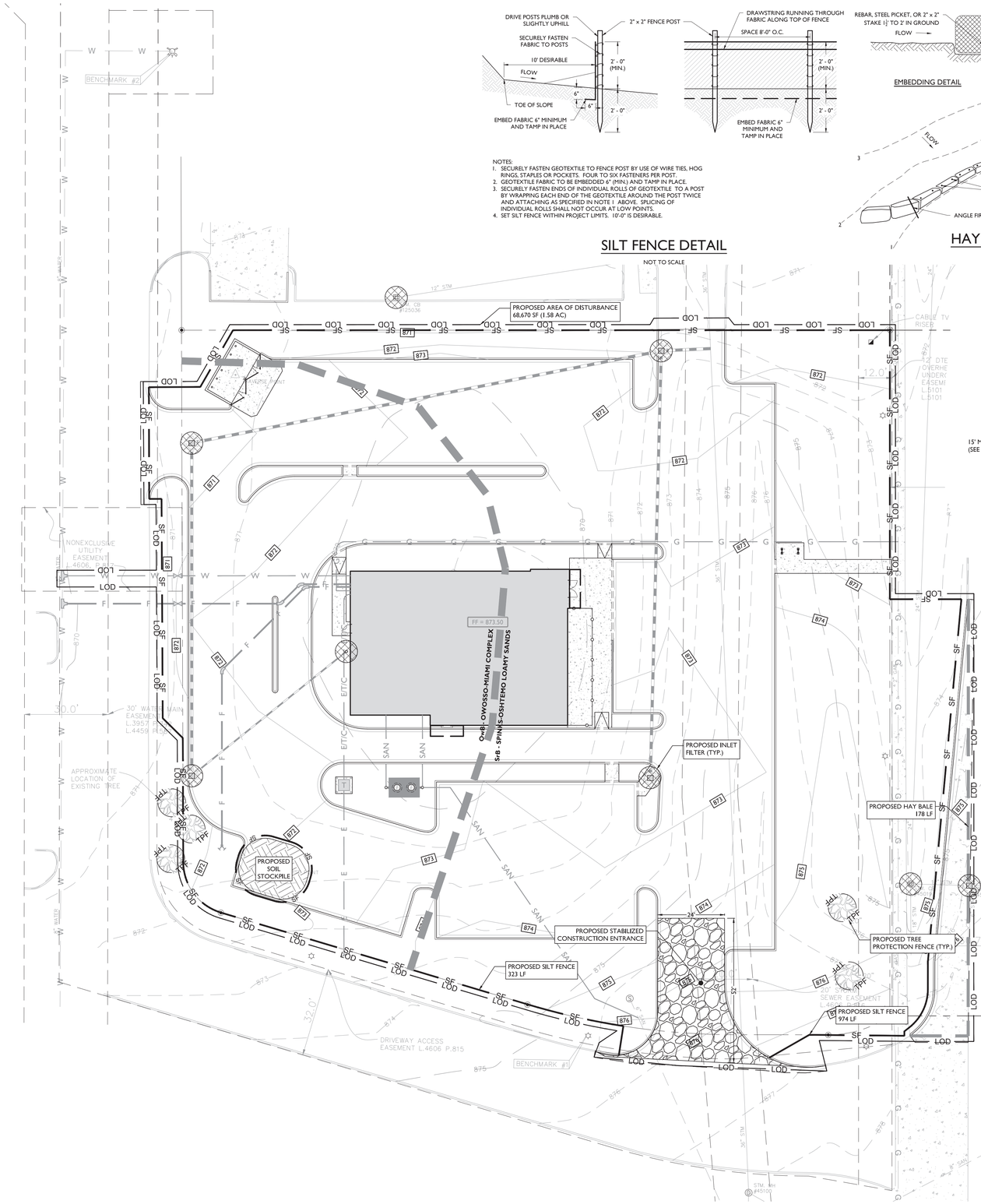

NOTES:
1. SECURELY FASTEN GEOTEXTILE TO FENCE POST BY USE OF WIRE TIES, HOG RINGS, STAPLES OR POCKETS. FOUR TO SIX FASTENERS PER POST.
2. GEOTEXTILE FABRIC TO BE EMBEDDED 6" (MIN.) AND TAMP IN PLACE.
3. SECURELY FASTEN ENDS OF INDIVIDUAL ROLLS OF GEOTEXTILE TO A POST BY WRAPPING EACH END OF THE GEOTEXTILE AROUND THE POST TWICE AND ATTACHING AS SPECIFIED IN NOTE 1 ABOVE. SPLICING OF INDIVIDUAL ROLLS SHALL NOT OCCUR AT LOW POINTS.
4. SET SILT FENCE WITHIN PROJECT LIMITS. 10'-0" IS DESIRABLE.

SILT FENCE DETAIL

NOT TO SCALE

EMBEDDING DETAIL

HAY BALE DETAIL

NOT TO SCALE

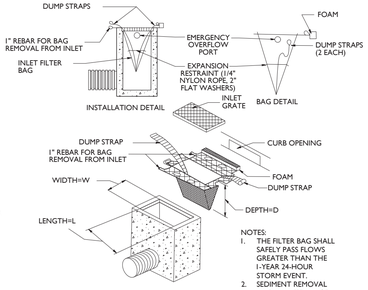

NOTES:
1. THE FILTER BAG SHALL SAFELY PASS FLOWS GREATER THAN THE 1-YEAR 24-HOUR STORM EVENT.
2. SEDIMENT REMOVAL AND MAINTENANCE SHALL BE PERFORMED FREQUENTLY AND AFTER EVERY STORM EVENT.

INLET FILTER BAG DETAIL

NOT TO SCALE

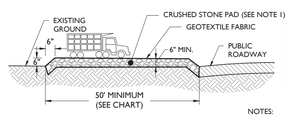

SLOPE OF PUBLIC ROADWAY	LENGTH OF STONE REQ'D	
	COARSE GRAINED SOILS	FINE GRAINED SOILS
0% TO 2%	50 FEET	100 FEET
2% TO 5%	100 FEET	200 FEET
> 5%	SEE NOTE 4	

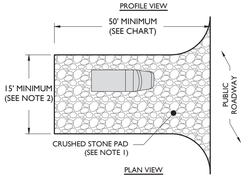

NOTES:
1. STONE SHALL BE ASTM C-33, SIZE No. 2 (2.5" TO 1.5") OR No. 3 (2" TO 1") CLEAN CRUSHED ANGULAR STONE.
2. WIDTH SHALL BE 15' MINIMUM OR THE FULL WIDTH OF THE ACCESS POINT, WHICHEVER IS GREATER.
3. STORMWATER FROM UP-SLOPE AREAS SHALL BE DIVERTED AWAY FROM THE STABILIZED PAD, WHERE POSSIBLE. AT POORLY DRAINED LOCATIONS, SUBSURFACE DRAINAGE GRAVEL FILTER OR GEOTEXTILE SHALL BE INSTALLED BEFORE THE STABILIZED CONSTRUCTION ENTRANCE.
4. WHERE THE SLOPE OF THE ROADWAY EXCEEDS 5%, A STABILIZED BASE OF HOT MIX ASPHALT BASE COURSE SHALL BE INSTALLED. THE TYPE AND THICKNESS OF THE BASE COURSE AND USE OF DENSE GRADED AGGREGATE SUB-BASE SHALL BE AS PRESCRIBED BY LOCAL MUNICIPAL ORDINANCE OR GOVERNING AUTHORITY.
5. CONTRACTOR SHALL PROVIDE A SMOOTH TRANSITION BETWEEN THE STABILIZED CONSTRUCTION ACCESS AND THE PUBLIC ROADWAY.

STABILIZED CONSTRUCTION ACCESS DETAIL

NOT TO SCALE

SOIL CHARACTERISTICS CHART	
TYPE OF SOIL	OWOSSO-MIAMI COMPLEX (OwB)
PERCENT OF SITE COVERAGE	34.0%
HYDROLOGIC SOIL GROUP	C
DEPTH TO RESTRICTIVE LAYER	> 80 INCHES
SOIL PERMEABILITY	0.20 TO 0.57 IN / HR
DEPTH TO WATER TABLE	> 80 INCHES

SOIL CHARACTERISTICS CHART	
TYPE OF SOIL	SPINKS-OSHTEMO LOAMY SANDS (SrB)
PERCENT OF SITE COVERAGE	66.0%
HYDROLOGIC SOIL GROUP	A
DEPTH TO RESTRICTIVE LAYER	> 80 INCHES
SOIL PERMEABILITY	1.98 TO 5.95 IN / HR
DEPTH TO WATER TABLE	> 80 INCHES

SEQUENCE OF CONSTRUCTION

1. INSTALLATION OF SOIL EROSION MEASURES (1 DAY).
2. STABILIZED CONSTRUCTION ENTRANCE CONSTRUCTION (1 DAY).
3. DEMOLITION OF EXISTING BUILDINGS (30 DAYS)
4. STORMWATER DRAINAGE CONSTRUCTION (10 DAYS)
5. UTILITY LEADS INSTALLATION (5 DAYS).
6. SITE GRADING (10 DAYS).
7. BUILDING CONSTRUCTION (90 DAYS).
8. SITE PAVING AND STRIPING (5 DAYS).
9. LANDSCAPE AND PERMANENT SOIL EROSION MEASURES INSTALLED (2 DAYS).
10. SITE CLEANUP (1 DAY).
11. REMOVE SOIL EROSION MEASURES (1 DAY).

NOTE: TIME DURATIONS ARE APPROXIMATE AND ARE INTENDED TO ACT AS A GENERAL GUIDE TO THE CONSTRUCTION TIMELINE. ALL DURATIONS ARE SUBJECT TO CHANGE BY CONTRACTOR. CONTRACTOR SHALL SUBMIT CONSTRUCTION SCHEDULE TO TOWNSHIP AND ENGINEER. CONTRACTOR SHALL PHASE CONSTRUCTION ACCORDINGLY

811 Know what's **below** **Call** before you dig.

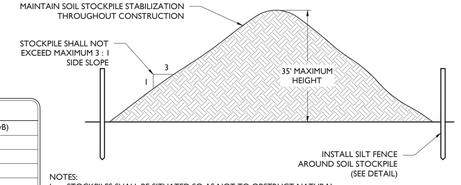

NOTES:
1. STOCKPILES SHALL BE SITUATED SO AS NOT TO OBSTRUCT NATURAL DRAINAGE OR CAUSE OFF-SITE ENVIRONMENTAL DAMAGE.
2. STOCKPILES SHALL BE STABILIZED IN ACCORDANCE WITH THE STANDARDS FOR PERMANENT OR TEMPORARY VEGETATIVE COVER FOR SOIL STABILIZATION, AS APPROPRIATE (SEE SOIL EROSION NOTES).

SOIL STOCKPILE DETAIL

NOT TO SCALE

20' 0' 20' 40'

GRAPHIC SCALE IN FEET
1" = 20'

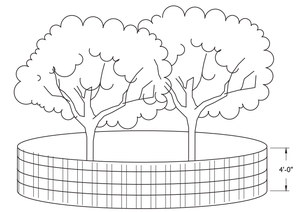

NOTES:
1. SNOW FENCING IS TO BE 4'-0" HIGH AND SELF SUPPORTED.
2. DO NOT STOCKPILE MATERIALS OR STORE EQUIPMENT WITHIN THE TREE PROTECTION FENCING.
3. SNOW FENCE TO BE INSTALLED AT DRIP LINE OF EXISTING TREE OR TREE CLUSTER TO BE PROTECTED OR NO CLOSER THAN 6' FROM TREE TRUNK IF NECESSARY.
4. IF THE PROJECT AREA ENCOMPASSES A PORTION OF THE DRIP LINE OF THE TREE, NO MORE THAN ONE THIRD OF THE OF THE TOTAL AREA OF WITHIN THE DRIP LINE SHOULD BE DISTURBED BY CONSTRUCTION OR REGRADING AND A 3" THICK LAYER OF MULCH SHALL BE INSTALLED OVER THE AREA OF THE DRIP LINE WHICH IS NOT PROTECTED BY FENCING TO PROVIDE A CUSHION.

TREE PROTECTION DETAIL

NOT TO SCALE

20' 0' 20' 40'

GRAPHIC SCALE IN FEET
1" = 20'

SYMBOL	DESCRIPTION
	PROPERTY BOUNDARY
	ADJACENT PROPERTY BOUNDARY
LOD	PROPOSED LIMIT OF DISTURBANCE
SF	PROPOSED SILT FENCE
TPF	PROPOSED TREE PROTECTION FENCE
	PROPOSED HAY BALES
	PROPOSED STOCKPILE & EQUIPMENT STORAGE
	PROPOSED STABILIZED CONSTRUCTION ENTRANCE
	PROPOSED INLET PROTECTION FILTER

SOIL EROSION AND SEDIMENT CONTROL NOTES

1. THE CONTRACTOR IS RESPONSIBLE FOR SOIL EROSION AND SEDIMENT CONTROL IN ACCORDANCE WITH LOCAL, STATE, AND FEDERAL REQUIREMENTS.
2. THE CONTRACTOR IS RESPONSIBLE FOR DUST CONTROL IN COMPLIANCE WITH LOCAL, STATE, AND FEDERAL AIR QUALITY STANDARDS.
3. THE CONTRACTOR IS RESPONSIBLE TO INSPECT ALL SOIL EROSION AND SEDIMENT CONTROL MEASURES WEEKLY AND AFTER A PRECIPITATION EVENT GREATER THAN 1 INCH. THE CONTRACTOR SHALL MAINTAIN AN INSPECTION LOG ON SITE AND DOCUMENT CORRECTIVE ACTION TAKEN THROUGHOUT THE COURSE OF CONSTRUCTION AS REQUIRED.

ISSUE	DATE	BY	DESCRIPTION
3.2	11/02/2021	MG	REVISED PER STAFF REPORT DATED 10/28/2021
3.1	10/05/2021	MPH	REVISED PER ASPHALT PARKING AREA
3	09/22/2021	MG	FOR SITE PLAN APPROVAL
2	05/12/2021	MH	FOR CONDITIONAL USE APPROVAL
1	04/01/2021	AF	FOR CLIENT REVIEW

NOT APPROVED FOR CONSTRUCTION

STONEFIELD engineering & design
Detroit, MI · Rutherford, NJ · New York, NY
Princeton, NJ · Tampa, FL · Boston, MA
www.stonefieldeng.com
607 Shelby Suite 200, Detroit, MI 48226
Phone 248.247.1115

SITE DEVELOPMENT PLAN

140 S. ZEEB ROAD

PROPOSED FAST FOOD RESTAURANT

PARCEL ID: H-08-21-400-035
140 S. ZEEB ROAD
TOWNSHIP OF SCIO
WASHTENAW COUNTY, MICHIGAN 48103



STONEFIELD engineering & design

SCALE: 1" = 20' | PROJECT ID: DET-200325

TITLE: SOIL EROSION & SEDIMENT CONTROL PLAN

DRAWING: C-9

V:\DET\2020\DET-200325-ALRC\140 S. ZEEB ROAD, SCIO TOWNSHIP, MI\CAD\PLOT\SDP-09-SESC.DWG

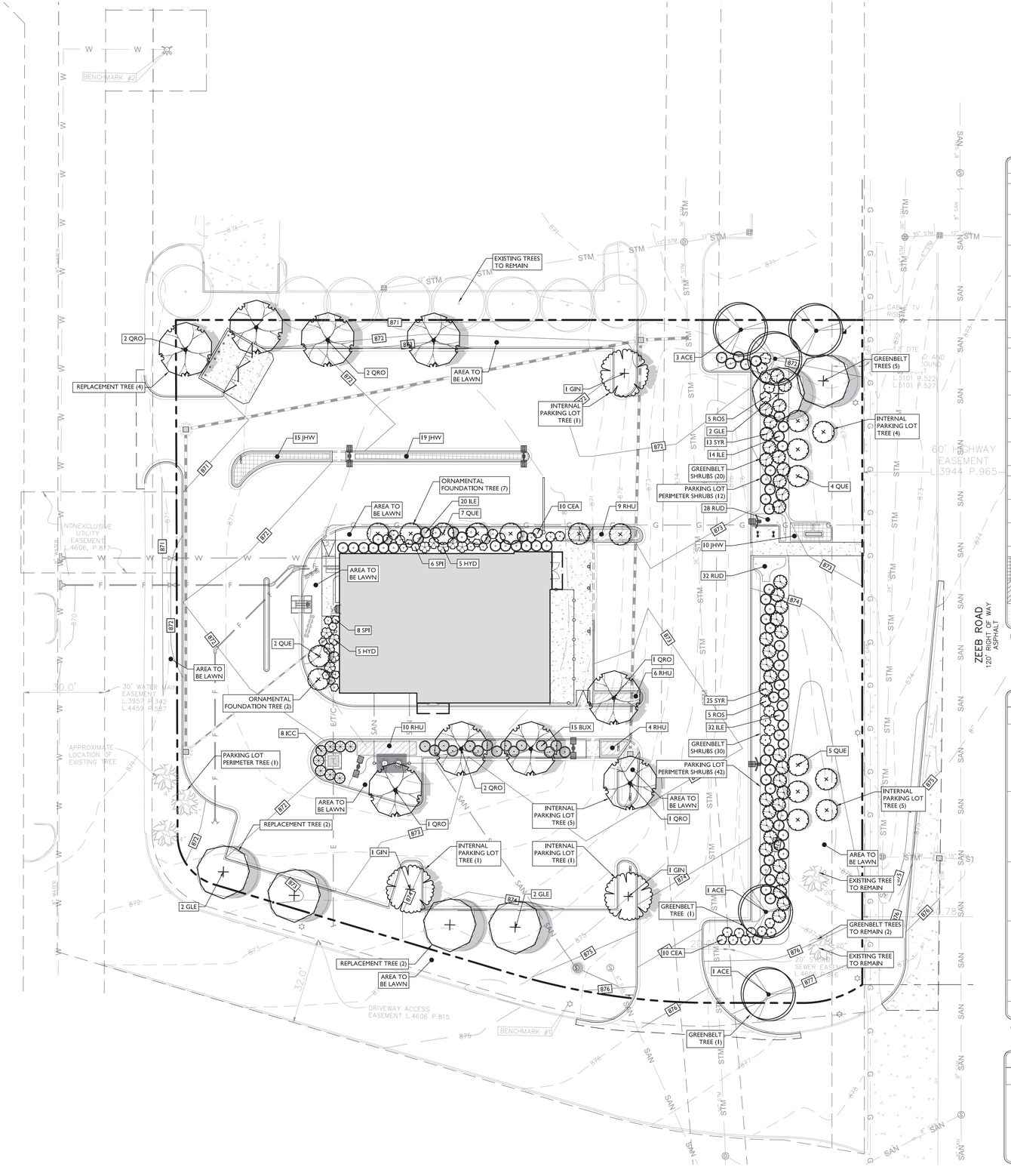

PLANT SCHEDULE

DECIDUOUS TREES	CODE	QTY	BOTANICAL NAME	COMMON NAME	SIZE	CONTAINER	SPACING
	ACE	5	ACER RUBRUM `RED SUNSET`	RED SUNSET MAPLE	2.5" - 3" CAL	B&B	AS SHOWN
	GIN	3	GINKGO BILOBA `PRINCETON SENTRY`	PRINCETON SENTRY MAIDENHAIR TREE	2.5" - 3" CAL	B&B	AS SHOWN
	GLE	6	GLEDITSIA TRIACANTHOS INERMIS	THORNLESS HONEYLOCUST	2.5" - 3" CAL	B&B	AS SHOWN
	QRO	9	QUERCUS ROBUR	ENGLISH OAK	2.5" - 3" CAL	B&B	AS SHOWN
	QUE	18	QUERCUS X WAREI `NADLER`	KINDRED SPIRIT OAK	2.5" - 3" CAL	B&B	AS SHOWN
SHRUBS	CODE	QTY	BOTANICAL NAME	COMMON NAME	SIZE	CONTAINER	SPACING
	CEA	20	CEANOTHUS AMERICANUS	NEW JERSEY TEA	18" - 24"	POT	AS SHOWN
	HYD	10	HYDRANGEA MACROPHYLLA `ENDLESS SUMMER`	BAILMER HYDRANGEA	18" - 24"	POT	AS SHOWN
	ROS	10	ROSA X `RADRAZZ`	KNOCK OUT SHRUB ROSE	18" - 24"	POT	AS SHOWN
	SPI	14	SPIRAEA JAPONICA `LITTLE PRINCESS`	LITTLE PRINCESS JAPANESE SPIREA	18" - 24"	POT	AS SHOWN
	SYR	38	SYRINGA PATULA `MISS KIM`	MISS KIM LILAC	18" - 24"	POT	AS SHOWN
EVERGREEN SHRUBS	CODE	QTY	BOTANICAL NAME	COMMON NAME	SIZE	CONTAINER	SPACING
	BUX	15	BUXUS MICROPHYLLA `WINTER GEM`	GLOBE WINTER GEM BOXWOOD	18" - 24"	POT	AS SHOWN
	ILE	66	ILEX GLABRA `DENSA`	INKBERRY HOLLY	18" - 24"	POT	AS SHOWN
	ICC	8	ILEX X MESERVEAE `CHESAPEAKE`	CHESAPEAKE HOLLY	30" - 36"	B&B	AS SHOWN
SHRUB AREAS	CODE	QTY	BOTANICAL NAME	COMMON NAME	SIZE	CONTAINER	SPACING
	JHW	44	JUNIPERUS HORIZONTALIS `WILTONII`	BLUE RUG JUNIPER	1 GAL.	POT	36" o.c.
	RHU	29	RHUS AROMATICA `GRO-LOW`	GRO-LOW FRAGRANT SUMAC	1 GAL.	POT	42" o.c.
	RUD	60	RUDBECKIA FULGIDA	CONEFLOWER	1 GAL.	POT	18" o.c.

NOTE: IF ANY DISCREPANCIES OCCUR BETWEEN AMOUNTS SHOWN ON THE LANDSCAPE PLAN AND WITHIN THE PLANT LIST, THE PLAN SHALL DICTATE.

LANDSCAPING AND BUFFER REQUIREMENTS

CODE SECTION	REQUIRED	PROPOSED
	PARKING LOT INTERIOR ISLANDS:	
§ 36-345.4(A)(1)	NO MORE THAN 24 SPACES ARE PERMITTED WITHOUT AN ISLAND	22 SPACES
§ 36-345.4(A)(2)	1 CANOPY TREE PER 8 PARKING SPACES (61 PARKING SPACES)(1 CANOPY TREE / 8 PARKING SPACES) = 8 CANOPY TREES	8 TREES
§ 36-345.4(A)(3)	3 FT BETWEEN PROPOSED TREE OR SHRUB PLANTING AND BACKSIDE OF CURB OR EDGE OF PAVEMENT	PROVIDED
	PARKING LOT PERIMETER AREAS:	
§ 36-345.4(B)(2)	ADJACENT TO PUBLIC ROAD: BERM WITH A HEIGHT OF 2-3 FT	HEDGE ROW PROVIDED*
	1 TREE AND 6 SHRUBS PER 30 LF: 247 LF	
	TREES: (247 LF) / (30 LF) = 9 TREES	9 TREES
	SHRUBS: (247 LF) / (30 LF) = 8.3 * 6 = 50 SHRUBS	50 SHRUBS
§ 36-345.4(C)	3-FT WIDE LANDSCAPE STRIP BETWEEN PAVED PARKING SURFACES AND BUILDING, FENCES AND PROPERTY LINES.	PROVIDED
	GREENBELT:	
§ 36-345.5(A)	LANDSCAPED GREENBELT EQUIVALENT TO DEPTH OF FRONT YARD SETBACK: 40 FT	40.8 FT
	1 TREE AND 6 SHRUBS PER 30 LF: 247 LF	
	TREES: (247 LF) / (30 LF) = 9 TREES	9 TREES
	SHRUBS: (247 LF) / (30 LF) = 8.3 * 6 = 50 SHRUBS	50 SHRUBS
	FOUNDATION LANDSCAPING:	
§ 36-345.7	PLANTINGS SHALL BE PERMITTED ALONG ALL SIDES OF BUILDING WHICH FACE A PUBLIC ROAD OR PARKING LOT. 1 ORNAMENTAL TREE AND 6 SHRUBS PER 30 LF: 269 LF	
	TREES: (269 LF) / (30 LF) = 9 TREES	9 TREES
	SHRUBS: (269 LF) / (30 LF) = 8.9 * 6 = 54 SHRUBS	54 SHRUBS
§ 36-345.8	25% OF SITE AREA IS LANDSCAPED	
	(60,223 SF)(0.25) = 15,056 SF	19,841 SF
§ 36-345.9	6 FT HIGH OPAQUE MASONRY WALL TO SCREEN OUTSIDE TRASH DISPOSALS	PROVIDED

(*) PLANNING COMMISSION MAY APPROVE ALTERNATIVE SOLID HEDGE PLANTINGS IN LIEU OF A BERM

TREE REMOVAL AND MITIGATION REQUIRMENTS

CODE SECTION	REQUIRED	PROPOSED
§ 36-346(e)(1)(a)	NO MORE THAN 20% OF TOTAL DBH TO BE REMOVED.	
	TOTAL PROTECTED TREES: 124" TOTAL DBH	
	TREES TO BE REMOVED: 50" TOTAL DBH	
	124" x 20% = 25" ALLOWED TO BE REMOVED	
	(72" TO BE REMOVED) - (25" PERMITTED ALLOWANCE) = 47" DBH OF REPLACEMENT REQUIRED	
	ONE REPLACEMENT TREE PER 6" OF DBH REMOVAL = 47" DBH/6 = 8 REPLACEMENT TREES	8 TREES

IRRIGATION NOTE:

IRRIGATION CONTRACTOR TO PROVIDE A DESIGN FOR AN IRRIGATION SYSTEM SEPARATING PLANTING BEDS FROM LAWN AREA. PRIOR TO CONSTRUCTION, DESIGN IS TO BE SUBMITTED TO THE PROJECT LANDSCAPE DESIGNER FOR REVIEW AND APPROVAL. WHERE POSSIBLE, DRIP IRRIGATION AND OTHER WATER CONSERVATION TECHNIQUES SUCH AS RAIN SENSORS SHALL BE IMPLEMENTED. CONTRACTOR TO VERIFY MAXIMUM ON SITE DYNAMIC WATER PRESSURE AVAILABLE MEASURED IN PSI. PRESSURE REDUCING DEVICES OR BOOSTER PUMPS SHALL BE PROVIDED TO MEET SYSTEM PRESSURE REQUIREMENTS. DESIGN TO SHOW ALL VALVES, PIPING, HEADS, BACKFLOW PREVENTION, METERS, CONTROLLERS, AND SLEEVES WITHIN HARDSCAPE AREAS.

LANDSCAPING NOTES

1. THE CONTRACTOR SHALL RESTORE ALL DISTURBED GRASS AND LANDSCAPED AREAS TO MATCH EXISTING CONDITIONS UNLESS INDICATED OTHERWISE WITHIN THE PLAN SET.
2. THE CONTRACTOR SHALL RESTORE ALL DISTURBED LAWN AREAS WITH A MINIMUM 4 INCH LAYER OF TOPSOIL AND SEED.
3. THE CONTRACTOR SHALL RESTORE MULCH AREAS WITH A MINIMUM 3 INCH LAYER OF MULCH .
4. THE MAXIMUM SLOPE ALLOWABLE IN LANDSCAPE RESTORATION AREAS SHALL BE 3 FEET HORIZONTAL TO 1 FOOT VERTICAL (3:1 SLOPE) UNLESS INDICATED OTHERWISE WITHIN THE PLAN SET.
5. THE CONTRACTOR IS REQUIRED TO LOCATE ALL SPRINKLER HEADS IN AREA OF LANDSCAPING DISTURBANCE PRIOR TO CONSTRUCTION. THE CONTRACTOR SHALL RELOCATE SPRINKLER HEADS AND LINES IN ACCORDANCE WITH OWNER'S DIRECTION WITHIN AREAS OF DISTURBANCE.
6. THE CONTRACTOR SHALL ENSURE THAT ALL DISTURBED LANDSCAPED AREAS ARE GRADED TO MEET FLUSH AT THE ELEVATION OF WALKWAYS AND TOP OF CURB ELEVATIONS EXCEPT UNLESS INDICATED OTHERWISE WITHIN THE PLAN SET. NO ABRUPT CHANGES IN GRADE ARE PERMITTED IN DISTURBED LANDSCAPING AREAS.
7. TREES SHALL NOT BE PLANTED DIRECTLY ABOVE ANY UTILITIES.

STATE OF MICHIGAN — PAUL DEVITTO III — LANDSCAPE ARCHITECT — No. 3901001797 — LICENSED LANDSCAPE ARCHITECT

PAUL DEVITTO, L.L.A.
MICHIGAN LICENSE No. 3901001797
LICENSED LANDSCAPE ARCHITECT

20' 0' 20' 40'
GRAPHIC SCALE IN FEET
1" = 20'

ISSUE	DATE	BY	DESCRIPTION
3.2	11/02/2021	MG	REVISED PER STAFF REPORT DATED 10/28/2021
3.1	10/05/2021	MPH	REVISED PER ASPHALT PARKING AREA
3	09/22/2021	MG	FOR SITE PLAN APPROVAL
2	05/12/2021	MH	FOR CONDITIONAL USE APPROVAL
1	04/01/2021	AF	FOR CLIENT REVIEW

NOT APPROVED FOR CONSTRUCTION

STONEFIELD engineering & design
Detroit, MI · Rutherford, NJ · New York, NY
Princeton, NJ · Tampa, FL · Boston, MA
www.stonefieldeng.com
607 Shelby Suite 200, Detroit, MI 48226
Phone 248.247.1115

SITE DEVELOPMENT PLAN

140 S. ZEEB ROAD

PROPOSED FAST FOOD RESTAURANT

PARCEL ID: H-08-21-400-035
140 S. ZEEB ROAD
TOWNSHIP OF SCIO
WASHTENAW COUNTY, MICHIGAN 48103

STATE OF MICHIGAN — JONATHAN WILLIAM COOKSEY — ENGINEER — No. 6201059428 — LICENSED PROFESSIONAL ENGINEER

STONEFIELD engineering & design

SCALE: 1" = 20' | PROJECT ID: DET-200325

TITLE: LANDSCAPING PLAN

DRAWING: C-10

V:\DET\2020\DET-200325-ALIS\G-140 ZEEB ROAD, SCIO TOWNSHIP, MI\CAD\PLOTS\DP-10-LANDSCPNG

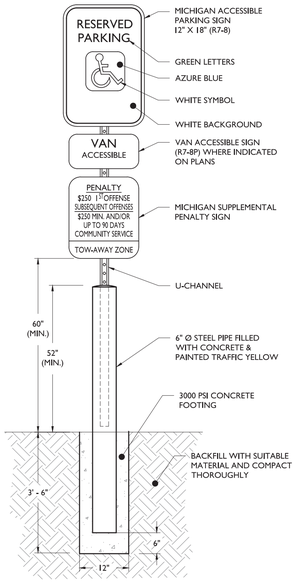

ACCESSIBLE PARKING SIGN WITH BOLLARD DETAIL

NOT TO SCALE

1

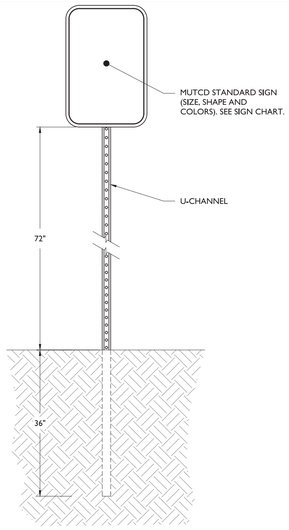

M.U.T.C.D. NUMBER	TEXT	COLOR		SIZE OF SIGN (WIDTH X HEIGHT)	TYPE OF MOUNT
		LEGEND	BACKGROUND		
STOP SIGN (R1-1)	STOP	WHITE	RED	36"x36"	GROUND
DO NOT ENTER (R5-1)	DO NOT ENTER	RED	WHITE	30"x30"	GROUND

NOTE:
1. ALL SIGNS SHALL BE IN ACCORDANCE WITH THE FEDERAL HIGHWAY ADMINISTRATION (FHWA) MANUAL ON UNIFORM TRAFFIC CONTROL DEVICES (MUTCD), EXCEPT AS NOTED.
2. ALL SIGNS SHALL BE MOUNTED AS TO NOT OBSTRUCT THE SHAPE OF "STOP" (R1-1) AND "YIELD" (R1-2) SIGNS.

SIGN POST & SIGN DATA

NOT TO SCALE

2

NOTES:
1. SEE SITE PLAN FOR EXACT SIGN LOCATIONS.
2. PARKING STALL MARKINGS ARE TO BE MEASURED FROM CENTER OF MARKING TO CENTER OF MARKING.

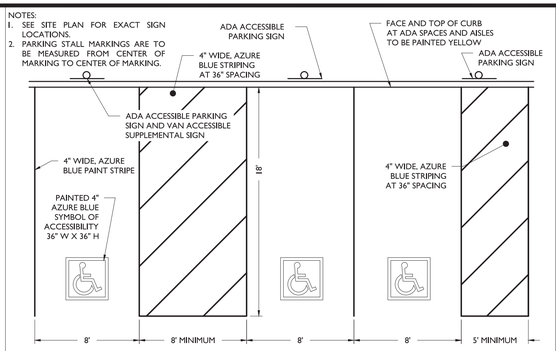

ADA PARKING STALL STRIPING

NOT TO SCALE

3

PAVEMENT STRIPING & MARKINGS NOTES:
1. ALL SIGNING AND STRIPING IN EXISTING CONDITION IN CONFLICT WITH THE PROPOSED DESIGN PLAN SHALL BE REMOVED.
2. ALL PROPOSED SIGNING AND STRIPING SHALL CONFORM TO THE CURRENT MANUAL ON UNIFORM TRAFFIC CONTROL DEVICES (MUTCD) PUBLISHED BY THE FEDERAL HIGHWAY ADMINISTRATION.
3. PAVEMENT STRIPING AND MARKINGS SHALL BE INSTALLED IN CONFORMANCE WITH ALL APPLICABLE LOCAL, COUNTY AND STATE REQUIREMENTS.
4. UNLESS OTHERWISE SPECIFIED, ALL STRIPING AND MARKINGS IN THE PUBLIC RIGHT-OF-WAY SHALL BE OF THERMOPLASTIC PAINT OR PREFORMED THERMOPLASTIC MARKINGS.
5. UNLESS OTHERWISE SPECIFIED, ON SITE PARKING STALL STRIPING, FIRE LANE STRIPING AND DIRECTIONAL ARROWS SHALL BE EPOXY PAINT. ON SITE STOP BARS, "DO NOT ENTER" BARS, AND ASSOCIATED LETTERING SHALL BE THERMOPLASTIC PAINT OR PREFORMED THERMOPLASTIC MARKINGS.

4

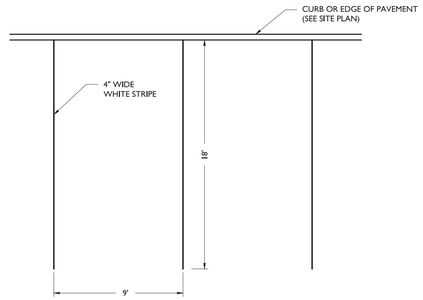

PARKING STALL STRIPING

NOT TO SCALE

5

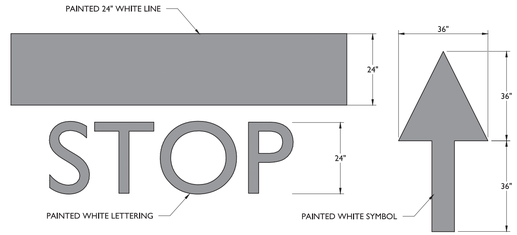

STOP BAR & ARROW DETAILS

NOT TO SCALE

6

ISSUE	DATE	BY	DESCRIPTION
3.2	11/02/2021	MG	REVISED PER STAFF REPORT DATED 10/28/2021
3.1	10/05/2021	MPH	REVISED PER ASPHALT PARKING AREA
3	09/22/2021	MG	FOR SITE PLAN APPROVAL
2	05/12/2021	MH	FOR CONDITIONAL USE APPROVAL
1	04/01/2021	AF	FOR CLIENT REVIEW

NOT APPROVED FOR CONSTRUCTION

STONEFIELD engineering & design
Detroit, MI · Rutherford, NJ · New York, NY
Princeton, NJ · Tampa, FL · Boston, MA
www.stonefieldeng.com
607 Shelby Suite 200, Detroit, MI 48226
Phone 248.247.1115

SITE DEVELOPMENT PLAN

140 S. ZEEB ROAD

PROPOSED FAST FOOD RESTAURANT

PARCEL ID: H-08-21-400-035
140 S. ZEEB ROAD
TOWNSHIP OF SCIO
WASHTENAW COUNTY, MICHIGAN 48103

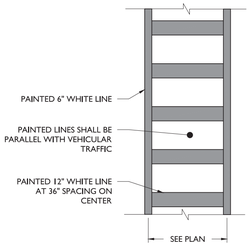

CROSSWALK DETAIL

NOT TO SCALE

7

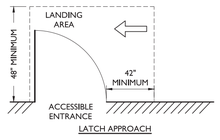

ACCESSIBLE ENTRANCE LANDING DETAIL

NOT TO SCALE

NOTES:
1. MAXIMUM SLOPE ON LANDING SHALL BE 1:50 IN ALL DIRECTIONS
2. DIMENSIONS SHOWN HERE ARE THE MINIMUM DIMENSIONS REQUIRED FOR AN ADA COMPLIANT LANDING AT THE ACCESSIBLE ENTRANCE. REFER TO SITE PLAN FOR SITE SPECIFIC DIMENSIONS THAT MAY SPECIFY A LARGER LANDING AREA.
3. CONTRACTOR SHALL CONTACT THE ENGINEER BEFORE CONSTRUCTION IF THE ACCESSIBLE ENTRANCE ON SITE DOES NOT MATCH THE SCENARIO SHOWN ABOVE.

8

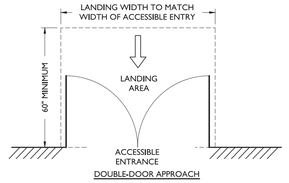

ACCESSIBLE ENTRANCE LANDING DETAIL

NOT TO SCALE

NOTES:
1. MAXIMUM SLOPE ON LANDING SHALL BE 1:50 IN ALL DIRECTIONS
2. DIMENSIONS SHOWN HERE ARE THE MINIMUM DIMENSIONS REQUIRED FOR AN ADA COMPLIANT LANDING AT THE ACCESSIBLE ENTRANCE. REFER TO SITE PLAN FOR SITE SPECIFIC DIMENSIONS THAT MAY SPECIFY A LARGER LANDING AREA.
3. CONTRACTOR SHALL CONTACT THE ENGINEER BEFORE CONSTRUCTION IF THE ACCESSIBLE ENTRANCE ON SITE DOES NOT MATCH THE SCENARIO SHOWN ABOVE.

9

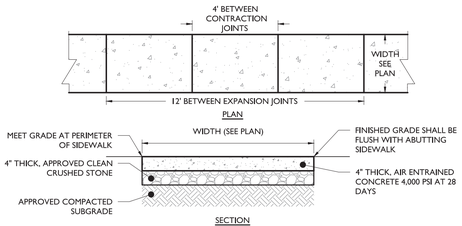

CONCRETE WALKWAY DETAIL

NOT TO SCALE

NOTES:
1. MAXIMUM CROSS SLOPE SHALL BE ¼" PER FOOT.
2. ½" EXPANSION JOINTS SHALL BE PROVIDED AT 12' INTERVALS WITH PRE-MOLDED, BITUMINOUS JOINT FILLER, RECESSED ½" FROM THE SURFACE.
3. 1" DEEP BY ½" WIDE, TOOLED CONTRACTION JOINTS SHALL BE PROVIDED AT 4' INTERVALS.
4. EXPANSION JOIN SHALL BE PROVIDED WHERE ADJACENT TO A BUILDING.

10

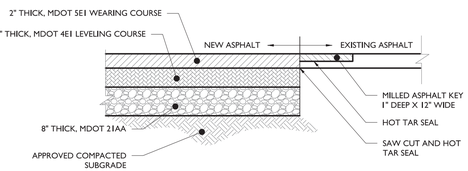

FULL DEPTH ASPHALT PAVEMENT DETAIL

NOT TO SCALE

NOTES:
1. CONTRACTOR TO REFER TO GEOTECHNICAL REPORT FOR FINAL PAVEMENT DESIGN
2. HMA MIX AND DENSE GRADED AGGREGATE SHALL CONFORM TO STATE DEPARTMENT OF TRANSPORTATION SPECIFICATIONS.

11

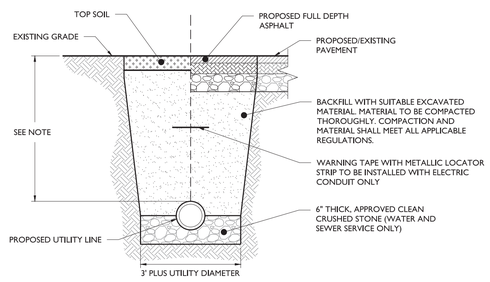

UTILITY TRENCH DETAIL

NOTE:

NOT TO SCALE

MINIMUM PIPE COVER SHALL BE AS FOLLOW:
- ELECTRIC SERVICE - PER APPLICABLE UTILITY AUTHORITY
- GAS SERVICE - PER APPLICABLE UTILITY AUTHORITY
- SEWER SERVICE - 36" MINIMUM
- WATER SERVICE - 48" MINIMUM

12

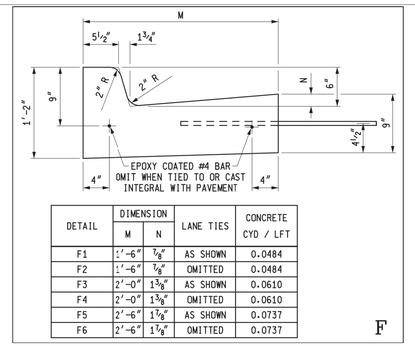

DETAIL	DIMENSION		LANE TIES	CONCRETE CYD / LFT
	M	N		
F1	1'-6"	7/8"	AS SHOWN	0.0484
F2	1'-6"	7/8"	OMITTED	0.0484
F3	2'-0"	1 3/8"	AS SHOWN	0.0610
F4	2'-0"	1 3/8"	OMITTED	0.0610
F5	2'-6"	1 7/8"	AS SHOWN	0.0737
F6	2'-6"	1 7/8"	OMITTED	0.0737

MDOT TYPE "F" CONCRETE CURB & GUTTER

NOT TO SCALE

13

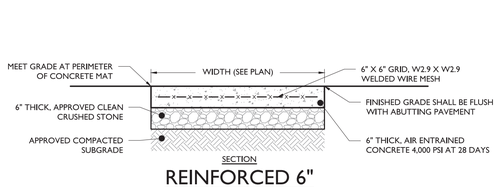

REINFORCED 6" CONCRETE MAT

NOT TO SCALE

NOTES:
1. ½" EXPANSION JOINTS WITH WATER SEAL SHALL BE PROVIDED AT 12' INTERVALS WITH PRE-MOLDED, BITUMINOUS JOINT FILLER, RECESSED ¾" FROM THE SURFACE. LONGITUDINAL REBAR TO BE CUT AT EXPANSION JOINTS.
2. 1" DEEP BY ½" WIDE, TOOLED CONTRACTION JOINTS SHALL BE PROVIDED AT MID-POINT BETWEEN EXPANSION JOINTS OR 6' INTERVALS MAX.
3. CONCRETE SHALL RECEIVE BROOM FINISH.
4. ALL EXPOSED CORNERS TO HAVE 12" CHAMFER.

14

JONATHAN REID COONSEY ENGINEER No. 6201069428 LICENSED PROFESSIONAL ENGINEER
STONEFIELD engineering & design

SCALE: AS SHOWN | PROJECT ID: DET-200325

TITLE: CONSTRUCTION DETAILS

DRAWING: C-11

V:\DET\2020\DET-200325 ALAN\C-140 ZEEB ROAD, SCIO TOWNSHIP, MI\CAD\PLOTSTYLE\11-12-DETL.DWG

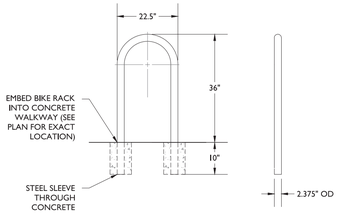

HOOP RACK HD IN GROUND MOUNTED BIKE RACK DETAIL

NOT TO SCALE

NOTES:
1. BIKE RACK TO BE MANUFACTURED BY DERO BIKE RACKS OR APPROVED EQUAL.
2. INSTALLATION TO BE COMPLETED IN ACCORDANCE WITH MANUFACTURERS SPECIFICATIONS

1

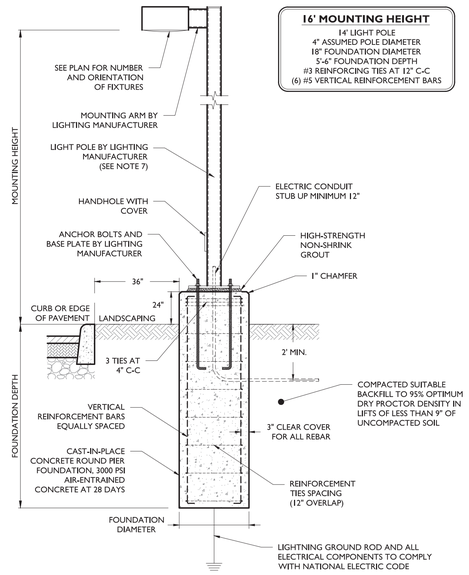

16' MOUNTING HEIGHT
14' LIGHT POLE
4" ASSUMED POLE DIAMETER
18" FOUNDATION DIAMETER
5'-6" FOUNDATION DEPTH
#3 REINFORCING TIES AT 12" C-C
(6) #5 VERTICAL REINFORCEMENT BARS

LIGHT POLE INSTALLATION DETAIL

NOT TO SCALE

NOTES:
1. MINIMUM SOIL BEARING PRESSURE OF 1500 PSF, SOIL FRICTION ANGLE OF 30 DEGREES, AND SOIL DRY UNIT WEIGHT OF 120 PCF SHALL BE CONFIRMED IN THE FIELD BY A QUALIFIED PROFESSIONAL.
2. CAST-IN-PLACE CONCRETE SHALL BE CONSOLIDATED USING VIBRATOR.
3. ALL REBAR TO BE NEW GRADE 60 STEEL.
4. PRE-CAST PIERS ACCEPTABLE UPON WRITTEN APPROVAL OF SHOP DRAWING BY ENGINEER.
5. CONCRETE TO BE INSTALLED A MINIMUM OF 7 DAYS PRIOR TO INSTALLING LIGHT POLE. POURED CONCRETE MIX REQUIRED TO OBTAIN 80% OF DESIGN STRENGTH PRIOR TO INSTALLING LIGHT POLE.
6. CONCRETE SHALL HAVE A MAXIMUM SLUMP OF 4" (WITHIN 1" TOLERANCE).
7. POLE SHALL BE RATED FOR 10 MPH HIGHER THAN MAXIMUM WIND SPEED 33FT ABOVE GROUND FOR THE AREA BASED ON ANSI/ASCE 7-93.
8. POUR TO BE TERMINATED AT A FORM.
9. WORK SHALL CONFORM TO ACI BEST PRACTICES FOR APPROPRIATE TEMPERATURE AND WEATHER CONDITIONS.
10. CONTRACTOR TO TEMPORARILY SUPPORT ADJACENT SOIL AND STRUCTURES DURING EXCAVATION IF REQUIRED.

2

Lumark

Catalog #		Type
Project		
Comments		Date
Prepared by		

DESCRIPTION

The Prevail™ LED pole and fixture combination makes selection and installation of poles and fixtures simple. Included is the die-cast Prevail area, site and roadway luminaire with standard mounting arm, square straight steel pole, anchor bolts, base cover, template and hardware. Stock configurations are available in single and dual fixture combinations. The Prevail luminaire delivers a new level of versatility and value in patent pending, architectural design that delivers energy savings greater than 85% and replaces 150-450W metal halide fixtures. The Prevail fixture and pole combo is ideal for general area/site lighting applications.

SPECIFICATION FEATURES

Construction
Construction is comprised of a heavy-duty, single-piece die-cast aluminum housing in dark bronze polyester powder paint. The die-cast aluminum door is tethered to provide easy access to the driver if replacement is required. The optics is mounted on a versatile, aluminum plate that dissipates heat from the LEDs resulting in longer life of the fixture. The fixture is IP66 and 3G vibration rated (ANSI C136.31).

Optics
Available in Type III and IV distributions with lumen packages ranging from 7,000 to 20,000 nominal lumens. Light engine configurations consist of 1 or 2 high-efficacy LEDs mounted to metal-core circuit boards to maximize heat dissipation and promote long life (up to L91/50,000 hours at 25°C) per IESNA TM-21. For the ultimate level of spill light control, an optional house side shield accessory can be field or factory installed.

Electrical
Available in 120-277V 50/60Hz. 10kV/10kA surge protection standard. 0-10V dimming driver is standard with leads external to the fixture to accommodate controls capability such as dimming and occupancy. Suitable for ambient temperatures from -40°C to 40°C.

Mounting
The versatile, patent pending, standard mount arm accommodates multiple drill patterns ranging from 1-1/2" to 4-7/8". Removal of the door on the standard mounting arm enables wiring of the fixture without having to access the driver compartment. A knock-out on the standard mounting arm enables round pole mounting.

Pole
Shaft is one-piece construction ASTM A500 grade "B" steel, shot blasted and finished in dark bronze polyester powder coat. Anchor base is fabricated from ASTM grade steel. ASTM A366 steel full base cover is provided to enclose base plate and anchor bolts. Anchor bolts are per ASTM A576 with two nuts, two flat washers, and one lock washer. Hardware and threaded portion of bolt are hot dip galvanized. 3" hook for 3/4" bolt. 4" hook for 1" bolt.

Finish
Housing and cast parts finished in five-stage super TGIC polyester bronze powder coat paint, 2.5 mil nominal thickness for superior protection against fade and wear.

Warranty
Five-year warranty.



PFPRV PREVAIL POLE AND FIXTURE COMBO

LED

POLE AND FIXTURE COMBO

DIMENSIONS

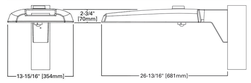

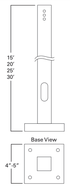

POLE MOUNT ARM

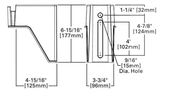

CERTIFICATION DATA
UL and cUL Wet Location Listed
IP66 Rated
3G Vibration Rated
ISO 9001

ENERGY DATA
Electronic LED Driver
0.9 Power Factor
<20% Total Harmonic Distortion
120-277VAC 50/60Hz,
347V/60Hz, 480V/60Hz
-40°C Minimum Temperature Rating
+40°C Ambient Temperature Rating

EPA
Effective Projected Area (Sq. Ft.): 0.75 (1 fixture)

SHIPPING DATA
Approximate Net Weight:
20lbs. (9.09 kgs.) **(1 fixture)**

EATON
Powering Business Worldwide

TD500029EN
October 15, 2019 11:09 AM

CONTROL OPTIONS

0-10V (D)
This fixture is offered standard with 0-10V dimming wire leads for use with a lighting control panel or other control method.

Photocontrol (PER and PER7)
Photocontrol receptacles provide a flexible solution to enable "dusk-to-dawn" lighting by sensing light levels. Advanced control systems compatible with NEMA 7-pin standards can be utilized with the PER7 receptacle.

Dimming Occupancy Sensor (MSP/DIM-L3X)
These sensors are factory installed in the luminaire housing. When a sensor for dimming operation (/DIM) is selected, the luminaire will dim down to approximately 50 percent power after five minutes of no activity detected. When activity is detected, the luminaire returns to full light output.

These occupancy sensors include an integral photocell that can be activated or inactivated with the programming remote / configuration tool for "dusk-to-dawn" control or "daylight harvesting". Note: For MSP sensors, the factory preset is ON (Enabled). The programming remote / tool is a wireless tool that can be utilized to change the dimming level, time delay, sensitivity and other parameters. A variety of sensor lenses are available to optimized the coverage pattern for mounting heights from 8'-30'.

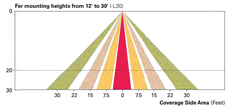

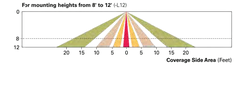

POWER AND LUMENS

Light Engine		C15	C25	C40	C60
Nominal Power (Watts)		57W	87W	143W	163W
Input Current @ 120V (A)		0.43	0.80	1.09	1.32
Input Current @ 277V (A)		0.19	0.35	0.48	0.57
Type III	Lumens	7,111	13,183	17,144	20,050
	BUG Rating	B1-U0-G2	B2-U0-G3	B3-U0-G4	B3-U0-G4
Type IV	Lumens	7,088	13,140	17,087	19,984
	BUG Rating	B1-U0-G3	B2-U0-G4	B2-U0-G4	B3-U0-G5

LUMEN MAINTENANCE

Ambient Temperature	TM-21 Lumen Maintenance (50,000 Hours)	Theoretical L70 (Hours)
25°C	> 91.30%	> 194,000
40°C	> 87.59%	> 134,000

LUMEN MULTIPLIER

Ambient Temperature	Lumen Multiplier
10°C	1.02
15°C	1.01
25°C	1.00
40°C	0.99

ORDERING INFORMATION

Sample Number: PFPRV-1-C25-T3-15-NAB

Series[1,2]	Number of Fixtures	Light Engine	Distribution	Pole Height	Maximum Wind Zone (MPH)	Options (Add as Suffix)	Accessories (Order Separately)
PFPRV=Prevail Pole and Fixture Combo	1=1, 2=2, 3=3, 4=4	C15=(1 LED) 7,100 Nominal Lumens C25=(2 LED) 13,100 Nominal Lumens C40=(2 LED) 17,100 Nominal Lumens C60=(2 LED) 20,007 Nominal Lumens	T2=Type II, T3=Type III, T4=Type IV	15=15', 20=20', 25=25', 30=30'	B=80, 9=90, 0=100	N/AB=No Anchor Bolts (Used when ordered separately) HSS=House Side Shield [3] MSP/DIM-L12=Integrated Sensor for Dimming Operation, 8' - 12' Mounting Height MSP/DIM-L30=Integrated Sensor for Dimming Operation, 12' - 30' Mounting Height PER=NEMA 3PIN Twistlock Photocontrol Receptacle [4] PER7=NEMA 7PIN Twistlock Photocontrol Receptacle [4]	HS/VERD=House Side Shield [3]

NOTES: 1 4000K CCT, standard bronze, 120-277V, 0-10V dimming. 2 Standard mount arm included with fixture. Supplied with straight steel shaft, anchor bolts, template, base cover and hardware. 3 HSS not available with C80 lumen package. Ordered as an option, it will come factory-installed. Ordered as a field-installable accessory, must order quantity one per optic/LED. 4 Not available with MSP options.

EATON
Powering Business Worldwide

Eaton
1121 Highway 74 South
Peachtree City, GA 30269
P: 770-486-4800
www.eaton.com/lighting

Specifications and dimensions subject to change without notice.

TD500029EN
October 15, 2019 11:09 AM

TYPE "A", "B", "C", & "D" LIGHT FIXTURES

NOT TO SCALE

3

Lumark

Catalog #		Type
Project		
Comments		Date
Prepared by		

DESCRIPTION

The patented Lumark Crosstour™ MAXX LED wall pack series of luminaries provides low-profile architectural style with super bright, energy-efficient LEDs. The rugged die-cast aluminum construction, back box with secure lock hinges, stainless steel hardware along with a sealed and gasketed optical compartment make Crosstour impervious to contaminants. The Crosstour MAXX wall luminaire is ideal for wall/surface, inverted mount for facade/canopy illumination, perimeter and site lighting. Typical applications include pedestrian walkways, building entrances, multi-use facilities, industrial facilities, perimeter parking areas, storage facilities, institutions, schools and loading docks.

SPECIFICATION FEATURES

Construction
Low-profile LED design with rugged one-piece, die-cast aluminum back box and hinged removable door. Matching housing styles incorporate both a full cutoff and refractive lens design. Full cutoff and refractive lens models are available in 58W, 81W and 102W. Patent pending secure lock hinge feature allows for safe and easy tool-less electrical connections with the supplied push-in connectors. Back box includes four 1/2" NPT threaded conduit entry points. The back box is secured by four lag bolts (supplied by others). External fin design extracts heat from the fixture surface. One-piece silicone gasket seals door and back box. Not recommended for car wash applications.

Optical
Silicone sealed optical LED chamber incorporates a custom engineered reflector providing high-efficiency illumination. Full cutoff models integrate an impact-resistant molded refractive prism optical lens assembly meeting requirements for Dark Sky compliance. Refractive lens models incorporate a molded lens assembly designed for maximum forward throw. Solid state LED Crosstour MAXX luminaries are thermally optimized with eight lumen packages in cool 5000K, neutral 4000K, or warm 3000K LED color temperature (CCT).

Electrical
LED driver is mounted to the die-cast aluminum housing for optimal heat sinking. LED thermal management system incorporates both conduction and natural convection to transfer heat rapidly away from the LED source. 58W, 81W and 102W models operate in -40°C to 40°C (-40°F to 104°F). High ambient 50°C (122°F) models available in 58W and 81W models only. Crosstour MAXX luminaires maintain greater than 89% of initial light output after 72,000 hours of operation. Four half-inch NPT threaded conduit entry points allow for thru-branch wiring. Back box is an authorized electrical wiring compartment. Integral LED electronic driver incorporates surge protection. 120-277V 50/60Hz, 480V 60Hz, or 347V 60Hz electrical operation. 480V is compatible for use with 480V Wye systems only.

Emergency Egress
Optional integral cold weather battery emergency egress includes emergency operation test switch (available in 58W and 81W models only), an AC-ON indicator light and a premium extended rated sealed maintenance-free nickel-metal hydride battery pack. The separate emergency lighting LEDs are wired to provide redundant emergency lighting. Listed to UL Standard 924, Emergency Lighting.

Area and Site Pole Mounting
Optional extruded aluminum 6-1/2" arm features internal bolt guides for supplied twin support rods, allowing for easy positioning of the fixture during installation to pole. Supplied with round plate adapter plate. Optional tenon adapter fits 2-3/8" or 3-1/2" O.D. Tenon.

Finish
Crosstour MAXX is protected with a super TGIC carbon bronze or summit white polyester powder coat paint. Super TGIC powder coat paint finishes withstand extreme climate conditions while providing optimal color and gloss retention of the installed life.

Warranty
Five-year warranty.





XTOR
CROSSTOUR
MAXX LED

APPLICATIONS:
WALL / SURFACE
INVERTED
SITE LIGHTING

CERTIFICATION DATA
UL/cUL Wet Location Listed
LM79 / LM80 Compliant
ROHS Compliant
NOM Compliant Models
3G Vibration Tested
UL924 Listed (CBP Models)
IP66 Rated
DesignLights Consortium® Qualified*

TECHNICAL DATA
40°C Ambient Temperature
External Supply Wiring 90°C Minimum

EPA
Effective Projected Area (Sq. Ft.):
XTOR6B, XTOR8B, XTOR12B=0.54
With Pole Mount Arm=0.98

SHIPPING DATA:
Approximate Net Weight:
12-15 lbs. (5.4-6.8 kgs.)

DIMENSIONS

FULL CUTOFF

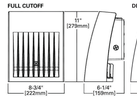

DEEP BACK BOX



REFRACTIVE LENS

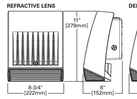

DEEP BACK BOX



OPTIONAL POLE MOUNT ARM

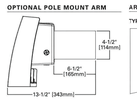

ARM DRILLING

TYPE "C"

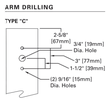

ESCUTCHEON PLATES

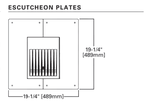

EATON
Powering Business Worldwide

*www.designlights.org

TD514005EN
September 17, 2018 3:03 PM

POWER AND LUMENS BY FIXTURE MODEL

58W Series						
LED Information	XTOR6B	XTOR6BRL	XTOR6B-W	XTOR6BRL-W	XTOR6B-Y	XTOR6BRL-Y
Delivered Lumens	6,129	6,225	5,038	6,133	5,611	5,826
B.U.G. Rating	B1-U0-G1	B2-U4-G3	B1-U0-G1	B2-U4-G3	B1-U0-G1	B2-U4-G3
CCT (Kelvin)	5000K	5000K	4000K	4000K	3000K	3000K
CRI (Color Rendering Index)	70	70	70	70	70	70
Power Consumption (Watts)	58W	58W	58W	58W	58W	58W
81W Series						
LED Information	XTOR8B	XTOR8BRL	XTOR8B-W	XTOR8BRL-W	XTOR8B-Y	XTOR8BRL-Y
Delivered Lumens	8,502	8,635	8,372	8,504	7,748	8,079
B.U.G. Rating	B2-U0-G1	B2-U4-G3	B2-U0-G1	B2-U4-G3	B2-U0-G1	B2-U4-G3
CCT (Kelvin)	5000K	5000K	4000K	4000K	3000K	3000K
CRI (Color Rendering Index)	70	70	70	70	70	70
Power Consumption (Watts)	81W	81W	81W	81W	81W	81W
102W Series						
LED Information	XTOR12B	XTOR12BRL	XTOR12B-W	XTOR12BRL-W	XTOR12B-Y	XTOR12BRL-Y
Delivered Lumens	12,728	13,458	12,539	13,258	11,861	12,595
B.U.G. Rating	B2-U0-G1	B2-U4-G3	B2-U0-G1	B2-U4-G3	B2-U0-G1	B2-U4-G3
CCT (Kelvin)	5000K	5000K	4000K	4000K	3000K	3000K
CRI (Color Rendering Index)	70	70	70	70	70	70
Power Consumption (Watts)	102W	102W	102W	102W	112W	102W

EGRESS Information	XTOR6B, XTOR8B and XTOR12B Full Cutoff CBP Egress LED	XTOR6B, XTOR8B and XTOR12B Refractive Lens CBP Egress LED
Delivered Lumens	509	468
B.U.G. Rating	N.A.	N.A.
CCT (Kelvin)	4000K	4000K
CRI (Color Rendering Index)	65	95
Power Consumption (Watts)	1.8W	1.8W

LUMEN MAINTENANCE

Ambient Temperature	TM-21 Lumen Maintenance (72,000 Hours)	Theoretical L70 (Hours)
XTOR6B Model		
25°C	> 90%	246,000
40°C	> 88%	213000
50°C	> 88%	201,000
XTOR8B Model		
25°C	> 89%	219,000
40°C	> 87%	195,000
50°C	> 86%	181,000
XTOR12B Model		
25°C	> 89%	222,000
40°C	> 87%	198,000

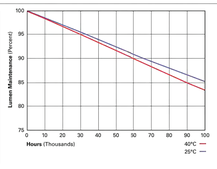

CURRENT DRAW

Voltage	Model Series				
	XTOR6B	XTOR8B	XTOR12B	XTOR6B-CBP (Fixture/Battery)	XTOR8B-CBP (Fixture/Battery)
120V	0.51	0.71	0.94	0.60/0.25	0.92/0.25
208V	0.25	0.39	0.52	- -	- -
240V	0.25	0.35	0.45	- -	- -
277V	0.22	0.31	0.39	0.36/0.21	0.50/0.21
347V	0.19	0.25	0.33		- -
480V	0.14	0.19	0.24		- -

EATON
Powering Business Worldwide

Eaton
1121 Highway 74 South
Peachtree City, GA 30269
P: 770-486-4800
www.eaton.com/lighting

Specifications and dimensions subject to change without notice.

TD514005EN
September 17, 2018 3:03 PM

TYPE "E" LIGHT FIXTURES

NOT TO SCALE

3

ISSUE	DATE	BY	DESCRIPTION
3.2	11/02/2021	MG	REVISED PER STAFF REPORT DATED 10/28/2021
3.1	10/05/2021	MPH	REVISED PER ASPHALT PARKING AREA
3	09/22/2021	MG	FOR SITE PLAN APPROVAL
2	05/12/2021	MH	FOR CONDITIONAL USE APPROVAL
1	04/01/2021	AF	FOR CLIENT REVIEW

NOT APPROVED FOR CONSTRUCTION

STONEFIELD engineering & design
Detroit, MI · Rutherford, NJ · New York, NY
Princeton, NJ · Tampa, FL · Boston, MA
www.stonefieldeng.com
607 Shelby Suite 200, Detroit, MI 48226
Phone 248.247.1115

SITE DEVELOPMENT PLAN

140 S. ZEEB ROAD

PROPOSED FAST FOOD RESTAURANT

PARCEL ID: H-08-21-400-035
140 S. ZEEB ROAD
TOWNSHIP OF SCIO
WASHTENAW COUNTY, MICHIGAN 48103

STATE OF MICHIGAN
JONATHAN REID COOKSEY
ENGINEER
No. 6201069428
LICENSE EXPIRES: 09/30/2021
PROFESSIONAL ENGINEER

STONEFIELD engineering & design

SCALE: AS SHOWN | PROJECT ID: DET-200325

TITLE:
CONSTRUCTION DETAILS

DRAWING:
C-12

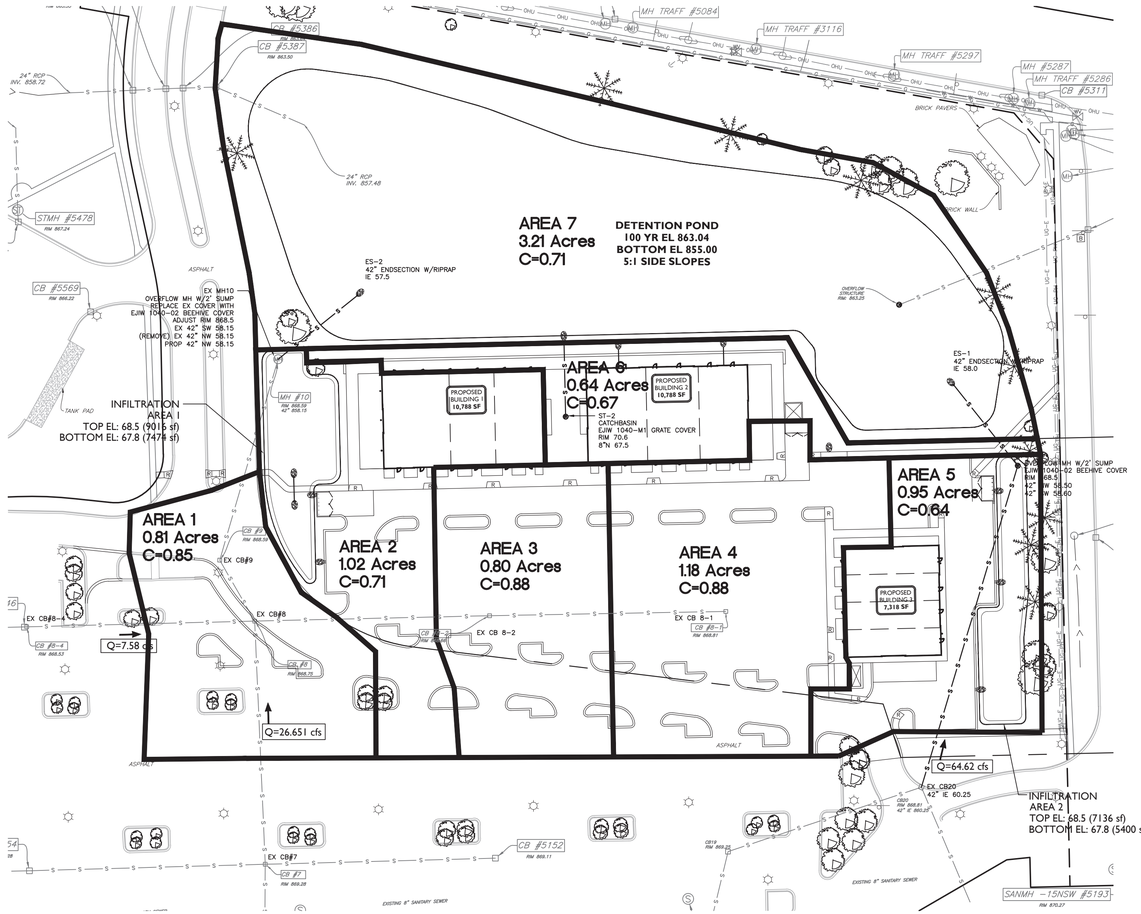

1 DRAINAGE AREA PLAN
SCALE: 1" = 60'

SSOE, INC. ARCHITECTS ENGINEERS
1050 WILSHIRE DRIVE SUITE 260
TROY, MI 48084
TELEPHONE: (248) 643-6222
FAX: (248) 643-6225

10 YR STORM SEWER DESIGN SHEET (MEIJER #173)
SCIO TOWNSHIP, MI
JACKSON / ZEEB
MEIJER

DESIGN BY: M.D.
CHECKED BY:
DATE: 2/2/2007
FILE NAM 173 STORM DESIGN.xls
PROJECT 01-6701-00

DRAINAGE AREA	FROM	TO	AREA Ac.	TOTAL AREA Ac.	C	INDIV.	A*C LATERAL	TOTAL A*C	FLOW TIME INDIV. min.	FLOW TIME ACCUM. min.	STORM RETURN PERIOD years	RAIN INTENSITY in/hr	CAPACITY REQUIRED cfs	PIPE SIZE in.	PIPE SLOPE %	MANNING COEF. n	FULL FLOW CAPACITY cfs	FLOW VELOCITY ft/s	SEWER LENGTH ft.	FLOW TIME min.	LOSSES IN MH ft.	FALL IN SEWER ft.	INVERT U/S ft.	INVERT D/S ft.	10 YR HYDRAULIC SLOPE %	10 YR HYDRAULIC GRADE LINE U/S ft	10 YR HYDRAULIC GRADE LINE D/S ft	RIM ELEV U/S ft	COVER U/S ft	RIM TO HGL U/S ft	10 YR HYDRAULIC GRADE LINE U/S ft	RIM ELEV D/S ft	COVER D/S ft	RIM TO HGL D/S ft
1	CB 1	CB 2	1.08	1.08	0.68	0.73	0.00	0.73	20.00	20.00	10	3.89	2.856	15	0.33	0.013	3.721	3.02	209	1.15	0	0.69	861.76	861.07	0.19	863.22	867.01	4.00	-3.79	862.82	867.22	4.90	-4.40
2	CB 2	CB 3	0.68	1.76	0.69	0.47	0.73	1.20	1.15	21.15	10	3.79	4.564	18	0.26	0.013	5.370	3.03	89	0.54	0.1	0.26	860.97	860.71	0.19	862.82	867.22	4.75	-4.40	862.63	870.65	8.44	-8.02
3	CB 3	CB 4	0.14	1.90	0.82	0.11	1.20	1.32	0.54	21.69	10	3.75	4.942	21	0.21	0.013	7.280	3.02	185	1.02	0.1	0.39	860.61	860.22	0.10	862.63	870.65	8.29	-8.02	862.45	869.10	7.13	-6.65
4	CB 4-1	CB 4	0.33	0.33	0.84	0.28	0.00	0.28	20.00	20.00	10	3.89	1.078	12	0.60	0.013	2.767	3.51	129	0.61	0	0.77	864.20	863.43	0.09	864.59	868.82	3.62	-4.23	864.47	869.10	4.67	-4.63
5	CB 4	MH 5	1.11	3.34	0.89	0.99	1.60	2.58	1.02	22.71	10	3.67	9.477	24	0.19	0.013	9.887	3.14	48	0.25	0.2	0.09	860.02	859.93	0.17	864.47	869.10	7.08	-4.63	864.39	869.74	7.81	-5.35
RD 7	LEAD	MH 5	0.69	0.69	0.95	0.66	0.00	0.66	20.00	20.00	10	3.89	2.549	12	1.55	0.013	4.447	5.65	127	0.37	0	1.97	867.75	865.78	0.51	867.43	872.75	4.00	-5.32	866.78	869.74	2.96	-2.96
	MH-5	CB 6	0.00	4.03	0.00	0.00	3.24	3.24	0.25	22.96	10	3.65	11.818	30	0.13	0.013	14.828	3.01	147	0.81	0.2	0.19	859.73	859.54	0.08	864.39	869.74	7.51	-5.35	864.27	869.25	7.21	-4.98
	CB 6	CB 7	1.19	5.13	0.93	1.02	3.24	4.26	0.81	23.77	10	3.59	15.294	36	0.11	0.013	22.180	3.13	195	1.04	0.1	0.21	859.44	859.23	0.05	864.27	869.25	6.81	-4.98	864.16	869.18	6.96	-5.03
RD 5	LEAD	MH 7-2	0.45	0.45	0.95	0.43	0.00	0.43	20.00	20.00	10	3.89	1.663	10	1.80	0.013	2.947	5.39	51	0.16	0	0.92	867.75	866.83	0.57	867.96	872.75	4.17	-4.79	867.67	871.34	3.67	-3.67
RD 6	LEAD	MH 7-2	0.46	0.46	0.95	0.44	0.00	0.44	20.00	20.00	10	3.89	1.699	10	1.28	0.013	2.485	4.54	80	0.29	0	1.02	867.75	866.73	0.60	868.04	872.75	4.17	-4.71	867.56	871.34	3.78	-3.78
	MH 7-2	CB7	0.00	0.91	0.00	0.00	0.87	0.87	0.29	20.29	10	3.86	3.379	12	1.50	0.013	4.375	5.56	87	0.26	1.1	1.31	865.63	864.32	0.89	866.10	871.34	4.71	-5.24	865.32	869.19	3.87	-3.87
8	CB 7-1	CB7	1.10	1.09	0.90	0.99	0.00	0.99	20.00	20.00	10	3.89	3.850	15	0.45	0.013	4.345	3.53	195	0.92	0	0.88	864.50	863.62	0.35	865.56	869.14	3.39	-3.58	864.87	869.19	4.32	-4.32
7	CB 7	CB 8	1.11	8.21	0.93	1.03	6.55	7.59	1.04	24.81	10	3.51	26.651	36	0.17	0.013	27.574	3.89	204	0.87	0.2	0.35	859.03	858.68	0.16	864.16	869.19	7.16	-5.03	863.84	868.79	7.11	-4.95
9	CB 8-1	CB 8-2	1.57	1.57	0.87	1.37	0.00	1.37	20.00	20.00	10	3.89	5.312	18	0.30	0.013	5.789	3.26	195	1.00	0	0.59	863.30	862.71	0.25	864.70	868.78	3.98	-4.08	864.21	868.75	4.55	-4.55
10	CB 8-2	CB 8	1.36	2.93	0.89	1.21	1.37	2.58	1.00	21.00	10	3.80	9.802	24	0.20	0.013	10.144	3.22	195	1.01	0.6	0.39	862.11	861.72	0.19	864.20	868.75	868.75	-4.55	863.84	868.79	7.08	-4.95
12	CB 8-3	CB 8-4	1.13	1.13	0.88	0.99	0.00	0.99	20.00	20.00	10	3.89	3.867	15	0.45	0.013	4.345	3.53	195	0.92	0	0.88	863.56	862.67	0.36	865.55	868.63	3.83	-3.08	864.85	868.57	4.65	-3.72
11	CB 8-4	CB 8	1.31	2.44	0.76	1.00	0.99	1.99	0.92	20.92	10	3.81	7.584	18	0.60	0.013	8.158	4.60	195	0.71	0.2	1.17	862.47	861.30	0.52	864.85	868.57	4.60	-3.72	863.84	868.79	5.99	-4.95
11	CB 8	CB 9	0.70	14.28	0.86	0.60	12.15	12.75	0.87	25.68	10	3.45	44.043	42	0.20	0.013	45.114	4.68	64	0.23	0.1	0.13	858.58	858.45	0.19	863.84	868.79	6.71	-4.95	863.72	868.56	6.61	-4.84
14	CB 9	MH 10	0.58	14.86	0.79	0.46	12.75	13.21	0.33	25.91	10	3.44	45.421	42	0.21	0.013	46.228	4.79	172	0.60	0	0.36	858.45	858.09	0.20	863.72	868.56	6.61	-4.84	863.37	868.48	6.89	-5.11
	MH 10	OUT A	0.00	14.86	0.00	0.00	13.21	13.21	0.60	26.51	10	3.40	44.885	42	0.21	0.013	46.228	4.79	75	0.26	0	0.16	858.09	857.93	0.20	863.37	868.48	6.89	-5.11	**863.22**	857.93	-3.50	5.29
25	IN A	CB 21	3.94	3.94	0.33	1.30	0.00	1.30	20.00	20.00	10	3.89	5.056	24	0.40	0.013	14.346	4.55	58	0.21	0.0	0.23	858.50	858.27	0.05	863.38	863.50	3.00	-0.12	863.35	863.47	3.20	-0.12
26	CB21	CB 22	0.13	4.07	0.95	0.12	1.30	1.42	0.21	20.21	10	3.87	5.511	24	0.40	0.013	14.346	4.55	30	0.11	0.1	0.12	858.17	858.05	0.06	863.35	863.47	3.30	-0.12	863.33	863.47	3.42	-0.14
27	CB 22	CB 23	0.18	4.25	0.73	0.13	1.42	1.56	0.11	20.32	10	3.86	6.005	24	0.40	0.013	14.346	4.55	12	0.04	0.1	0.05	857.95	857.90	0.03	863.33	863.47	3.52	-0.14	863.32	863.55	3.65	-0.23
28	CB 23	CB 24	0.18	4.43	0.73	0.13	1.56	1.69	0.04	20.36	10	3.86	6.507	24	0.40	0.013	14.346	4.55	30	0.11	0.1	0.12	857.80	857.68	0.08	863.32	863.55	3.75	-0.23	863.30	863.45	3.77	-0.15
29	CB 24	OUT C	0.13	4.56	0.95	0.12	1.69	1.81	0.11	20.47	10	3.85	6.967	24	0.40	0.013	14.346	4.55	82	0.30	0.1	0.33	857.58	857.25	0.09	863.30	863.45	3.87	-0.15	**863.22**	863.25	-2.00	5.97
RD4	MH 11	CB12	0.76	0.76	0.95	0.72	0.00	0.72	20.00	20.00	10	3.89	2.808	12	2.60	0.013	5.760	7.31	75	0.17	0.0	1.95	867.75	865.80	0.62	867.26	872.49	3.74	-5.23	866.80	870.19	3.39	-3.39
15	CB 12	CB 13	0.30	1.06	0.42	0.13	0.72	0.85	0.17	20.17	10	3.87	3.285	15	0.60	0.013	5.017	4.08	128	0.52	0.2	0.77	865.60	864.83	0.26	866.59	870.19	3.34	-3.60	866.26	870.13	4.05	-3.87
RD 3	MH 13-1	CB 13	0.76	0.76	0.95	0.72	0.00	0.72	20.00	20.00	10	3.89	2.808	12	3.27	0.013	6.460	8.20	75	0.15	0.0	2.45	867.75	865.30	0.62	866.76	872.47	3.72	-5.71	866.30	870.13	3.83	-3.83
15A	CB 13	CB 14	0.27	2.09	0.44	0.12	1.57	1.69	0.52	20.69	10	3.83	6.468	18	0.55	0.013	7.811	4.41	120	0.45	0.2	0.66	864.53	863.87	0.18	866.26	870.13	4.09	-3.87	865.81	870.06	4.59	-4.25
RD 2	MH 14-1	CB 14	0.69	0.69	0.95	0.66	0.00	0.66	20.00	20.00	10	3.89	2.549	12	3.27	0.013	6.460	8.20	75	0.15	0.0	2.45	867.75	865.30	0.51	866.68	872.51	3.76	-5.83	866.30	870.06	3.76	-3.76
15B	CB 14	CB 15	0.26	3.04	0.44	0.11	2.34	2.46	0.45	21.14	10	3.79	9.326	24	0.25	0.013	11.341	3.60	120	0.56	0.2	0.30	863.77	863.47	0.17	865.81	870.06	4.29	-4.25	865.61	870.17	4.70	-4.56
RD 1	MH 15-1	CB 15	0.76	0.76	0.95	0.72	0.00	0.72	20.00	20.00	10	3.89	2.808	12	3.27	0.013	6.460	8.20	75	0.15	0.0	2.45	867.75	865.30	0.62	866.76	872.43	3.68	-5.67	866.30	870.17	3.87	-3.87
16	CB 15	CB 16	0.34	4.14	0.39	0.13	3.17	3.30	0.56	21.70	10	3.75	12.378	30	0.15	0.013	15.928	3.24	281	1.45	0.2	0.42	863.27	862.85	0.09	865.61	870.17	4.40	-4.56	865.35	869.50	4.15	-4.15
17	CB 16	CB 17	0.64	4.78	0.41	0.26	3.30	3.56	1.45	23.15	10	3.63	13.006	30	0.15	0.013	15.928	3.24	177	0.91	0.2	0.27	862.65	862.38	0.10	865.05	869.50	4.28	-4.45	864.86	869.48	4.61	-4.61
20	CB 17	CB 18	1.35	6.13	0.89	1.20	3.58	4.78	0.91	24.06	10	3.57	17.050	30	0.30	0.013	22.526	4.58	188	0.68	0.2	0.56	862.18	861.62	0.17	864.76	869.48	4.81	-4.72	864.44	869.18	5.06	-4.74
GC 8	LEAD	CB 18	0.56	0.56	0.83	0.46	0.00	0.46	20.00	20.00	10	3.89	1.808	10	1.98	0.013	3.091	5.65	147	0.43	0.0	2.91	865.75	862.84	0.68	865.43	872.75	6.17	-7.32	864.44	869.16	5.49	-4.72
22	CB 18	CB 19	0.99	7.68	0.83	0.82	5.23	6.07	0.68	24.74	10	3.52	21.345	36	0.20	0.013	29.908	4.22	241	0.95	0.2	0.48	861.42	860.94	0.10	864.44	869.18	4.76	-4.74	864.19	869.37	5.43	-5.18
23	CB 19	CB 20	0.98	8.66	0.88	0.86	6.07	6.92	0.95	25.69	10	3.45	23.887	36	0.20	0.013	29.908	4.22	168	0.66	0.2	0.34	860.74	860.40	0.13	864.19	869.37	5.63	-5.18	863.98	868.71	5.31	-4.73
30	CB 20-1	CB 20-1-1	12.08	12.08	0.80	9.66	0.00	9.66	20.00	20.00	10	3.89	37.582	30	0.90	0.013	38.909	7.90	162	0.34	1.3	1.45	865.65	864.40	0.84	868.25	878.00	9.65	-9.75	866.90	872.45	5.55	-5.55
	CB 20-1-1	CB 20-2-1	0.00	12.08	0.00	0.00	9.66	9.66	0.34	20.34	10	3.86	37.299	30	0.84	0.013	37.784	7.68	109	0.24	0.0	0.92	864.40	863.48	0.82	866.88	872.45	5.55	-5.57	865.98	872.45	5.55	-5.47
19	CB 20-2	CSD2-2-1	1.22	1.22	0.80	0.98	0.00	0.98	20.00	20.00	10	3.89	3.796	15	1.37	0.013	7.586	6.16	78	0.21	0.0	1.07	864.65	863.58	0.34	865.97	868.89	2.99	-2.92	865.70	872.40	7.57	-6.70
	CB 20-2-1	CB20-3-1	0.00	13.30	0.00	0.00	10.64	10.64	0.24	20.58	10	3.84	40.853	36	0.38	0.013	41.096	5.80	286	0.82	1.71	1.08	862.67	861.59	0.37	865.70	872.40	6.73	-6.70	864.64	873.00	8.41	-8.36
21	CB 20-3	CB 20-3-1	1.29	1.29	0.80	1.03	0.00	1.03	20.00	20.00	10	3.89	4.013	15	0.32	0.013	3.654	2.97	154	0.86	0.00	0.49	864.70	864.21	0.38	866.05	869.07	3.12	-3.02	865.46	873.00	7.54	-7.54
	CB 20-3-1	CB 20	0.00	14.59	0.00	0.00	11.67	11.67	0.82	21.40	10	3.77	44.023	36	0.44	0.013	44.361	6.26	152	0.40	0.12	0.67	861.47	860.80	0.43	864.64	873.00	8.53	-8.36	863.98	868.75	4.95	-4.77
24	CB 20	OUT B	0.50	23.75	0.72	0.36	18.60	18.96	0.66	26.35	10	3.41	64.616	42	0.27	0.013	52.682	5.46	165	0.50	0.4	0.45	860.25	859.80	0.41	863.98	868.75	5.00	-4.77	**863.30**	859.80	-3.50	3.50
DET. BASIN	OUTLET	MH 6												36	0.12	0.013	23.167	3.27	163	0.83	0	0.20	853.93	853.73	0.00	#REF!	862.22	5.29	#REF!	#REF!	863.00	6.27	#REF!

Q (CAPACITY REQUIRED BY RATIONAL METHOD FORMULA) = CIA
Q = PEAK RATE OF RUN-OFF IN CFS
C = COEFFICIENT OF RUN-OFF (C = 0.2 FOR LAWN AREAS)
I = 175 / (25 + T) (C = 0.95 FOR PAVEMENT & ROOF AREAS)
T = TIME OF CONCENTRATION FULL FLOW CAPACITY BY MANNING'S FORMULA

2 SSOE STORM CALCULATIONS - 2007

PROPOSED STORM STRUCTURE SCHEDULE

Structure Number	Structure Type	Structure Diameter (ft.)	E.J.I.W. Casting or Equal	Rim Elevation	Lowest Pipe Invert	Sump Depth (ft.)	Structure Depth W/O Sump
ES-1	42" Endsection	n/a	n/a	n/a	858.00	n/a	n/a
ES-2	42" Endsection	n/a	n/a	n/a	857.50	n/a	n/a
ST-1	Overflow MH	8	1040-02	868.50	858.50	2	10.00
ST-2	Catchbasin	2	1040-M1	870.60	867.50	0	3.10

DRAINAGE AREA SUMMARY

Area	Cover Type	Area (sf)	Area (ac)	Runoff Coefficient C	(C)(Area)
1	Pavement	31,263	0.72	0.95	0.68
	Grass	4,237	0.10	0.15	0.01
	TOTAL	35,500	0.81	0.85	0.70
2	Pavement	20,153	0.46	0.95	0.44
	Grass	13,569	0.31	0.15	0.05
	Building	10,788	0.25	0.95	0.24
	TOTAL	44,510	1.02	0.71	0.72
3	Pavement	31,517	0.72	0.95	0.69
	Grass	3,150	0.07	0.15	0.01
	TOTAL	34,667	0.80	0.88	0.70
4	Pavement	47,379	1.09	0.95	1.03
	Grass	4,200	0.10	0.15	0.01
	TOTAL	51,579	1.18	0.88	1.05
5	Pavement	18,167	0.42	0.95	0.40
	Grass	16,061	0.37	0.15	0.06
	Building	7,318	0.17	0.95	0.16
	TOTAL	41,546	0.95	0.64	0.61
6	Pavement	7,293	0.17	0.95	0.16
	Building	10,788	0.25	0.95	0.24
	Grass	9,865	0.23	0.15	0.03
	TOTAL	27,946	0.64	0.67	0.43
7	Pond	91,803	2.11	1.00	2.11
	Grass	47,966	1.10	0.15	0.17
	TOTAL	139,769	3.21	0.71	2.27

EXISTING STORM STRUCTURE SCHEDULE

Structure Number	Rim Elevation	Invert Elevations
19	69.25	36"NE 60.60 36"SW 60.60
20	68.81	42"NE 60.25 36"SE 60.80 36"SW 60.25
MH 10	68.59	42"SW 58.15 42"NE 58.15
CB 9	68.59	42"SE 58.36 42"NE 58.36
5145	68.63	15"E 63.47
5147	68.53	18"E 62.37 15"W 62.52
CB 8	68.75	42"NW 58.70 36"S 58.70 18"W 61.22 24"E 61.78
CB 8-2	68.66	24"W 62.20 18"E 62.85
CB 8-1	68.81	18"W 63.37
5152	69.11	15"W 83.98
CB 7	69.28	36"N 58.95 36"W 59.10 15"E 63.50 12"S 64.05
5154	69.28	30"W 59.3 36"E 59.3

STORM SEWER DESIGN: CB8-1 to ES-2

STARTING TIME= 15.00 MANNING'S "n" = 0.013 10 YEAR STORM = 151.8 / T+19.90

FROM MH#	TO MH#	INCR AREA	RUN-OFF COEF.	EQUIV. AREA	TOTAL EQUIV. AREA	TIME (MIN.)	RAIN INT.	FLOW	PIPE CAP. FULL	PIPE DIA.	PIPE LEN.	SLOPE PIPE (%)	SLOPE FOR FULL FLOW (%)	VEL. (FT./S)	TIME (MIN.)	PIPE INVERT EL. UPPER END	PIPE INVERT EL. LOWER END	RIM ELEV.	DEPTH COVER (Low End)	DEPTH COVER (High End)	HYDRAULIC GRADIENT ELEVATION
ex cb8-1	ex cb8-2	1.18	0.88	1.04	1.04	15.00	4.35	4.52	5.37	18	198	0.26	0.18	3.04	1.09	863.37	862.85	868.80	3.72	3.72	862.19
ex cb8-2	ex cb8	0.80	0.88	0.70	1.74	16.09	4.22	7.35	10.39	24	197	0.21	0.11	3.31	0.99	862.20	861.78	868.66	4.21	4.10	861.82
ex cb8	ex cb9	0.00	0.00	0.00	1.74	17.08	4.11	41.58	76.36	42	59	0.58	0.17	7.94	0.12	858.70	858.36	868.75	6.18	6.18	861.62
ex cb9	ex mh10	0.81	0.85	0.69	2.43	17.20	4.09	44.18	34.85	42	175	0.12	0.19	3.62	0.81	858.36	858.15	868.59	6.36	6.36	861.52
ex mh10	ES-2	1.02	0.71	0.72	3.16	18.01	4.00	46.00	87.71	42	85	0.76	0.21	9.12	0.16	858.15	857.50	868.50	6.48	6.48	861.18

From SSOE Plans
Flow from cb7 to cb8 26.651 cfs
Flow from cb8-4 to cb8 7.58 cfs
34.235 cfs

Infiltration Area #1
Infiltration rate: 5.06 in/hr
Bottom bed area: 7474 sf

Infiltration flow:
(Rate /12 in / 3600 sec x bottom bed area)
5.06 / 12 / 3600 x 5400 = 0.88 cfs

Flow Exiting ex mh10 to ES-2
Flow from ex cb9: 44.18 cfs
Flow from Area 2: 2.69 cfs
Subtract infiltration flow: (0.88) cfs

Net Flow to ES-1: 46.00 cfs

Capacity of 42"@0.76% : 87.71 cfs > 46.00 cfs

STORM SEWER DESIGN: CB20 to ES-1

STARTING TIME= 15.00 MANNING'S "n" = 0.013 10 YEAR STORM = 151.8 / T+19.90

FROM MH#	TO MH#	INCR AREA	RUN-OFF COEF.	EQUIV. AREA	TOTAL EQUIV. AREA	TIME (MIN.)	RAIN INT.	FLOW	PIPE CAP. FULL	PIPE DIA.	PIPE LEN.	SLOPE PIPE (%)	SLOPE FOR FULL FLOW (%)	VEL. (FT./S)	TIME (MIN.)	PIPE INVERT EL. UPPER END	PIPE INVERT EL. LOWER END	RIM ELEV.	DEPTH COVER (Low End)	DEPTH COVER (High End)	HYDRAULIC GRADIENT ELEVATION
ex cb20	1	0.00	0.00	0.00	0.00	15.00	4.35	64.62	76.95	42	281	0.59	0.41	8.00	0.59	860.25	858.60	868.81	4.69	4.69	863.04
1	ES-1	0.95	0.64	0.61	0.61	15.59	4.28	66.59	76.95	42	86	0.59	0.44	8.00	0.18	858.50	858.00	869.60	7.22	7.12	861.88

Flow from ex cb20 (SSOE plans): 64.62 cfs

Infiltration Area #2
Infiltration rate: 5.06 in/hr
Bottom bed area: 5400 sf

Infiltration flow:
(Rate /12 in / 3600 sec x bottom bed area)
5.06 / 12 / 3600 x 5400 = 0.63 cfs

Flow Exiting ST-1 to ES-1
Flow from ex cb20 64.62 cfs
Flow from Area 5: 2.6 cfs
Subtract infiltration flow: (0.63) cfs

Net Flow to ES-1: 66.59 cfs

Capacity of 42"@0.59% : 76.95 cfs > 66.59 cfs

3 STORM CALCULATIONS

E:\50000's\53000's\Scio Township\53549 Airlg Scio\SCIO MASTER2.dwg – DRAINAGE PLAN – (9/23/2019 10:54 AM)

PROJECT NUMBER: 53549
DATE: 02-01-18
SCALE: 1" = 60'
DESIGNED BY: AJC
DRAWN BY: AJC
CHECKED BY:
APPROVED BY:

REVISIONS
02-15-19 COUNTY REVISIONS ENGINEERING SUBMITTAL
04-02-19 ENG/WRC REVISIONS
05-28-19 ENG/WRC REVISIONS
05-30-19 EGLE WM REVISIONS
07-03-19 WRC REVISIONS
08-09-19 WRC REVISIONS
09-23-19 WRC REVISIONS

ENGINEERING FOR RESULTS
13500 REECK ROAD
SOUTHGATE, MI 48195
(734) 759-1600
FAX (734) 282-6566
WWW.HENGINEERS.COM
HENNESSEY ENGINEERS, INC

TITLE
DRAINAGE AREA PLAN
SCIO MEIJER OUTLOTS
SCIO TOWNSHIP
WASHTENAW COUNTY, MICHIGAN

SHEET
C-11

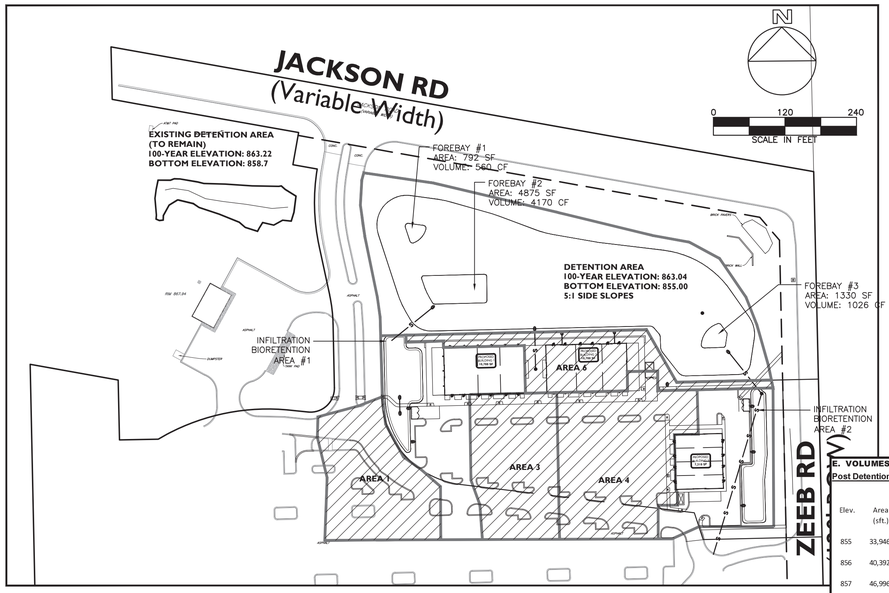

1 STORMWATER MANAGEMENT PLAN
1" = 120'

2007 RULES : REDEVELOPMENT AREA CALCULATIONS

C. AREAS 1-6 (Existing Conditions)
2007 Washtenaw County 100 Yr Requirements

Areas & Runoff Coefficients

Cover Type	Soil Type	Area (sf)	Area (ac)	Runoff Coefficient C	(C)(Area)
Pavement	A	121,208	2.78	0.95	2.64
Grass	A	89,609	2.06	0.15	0.31
Pond	A	24,931	0.57	1.0	0.57
	TOTAL	235,748	5.41	CA Total	3.52
				Area Total	5.41
				Weighted C	0.65

100-Year Flood Volume

Allowable Outflow Q= (0.15 cfs/ac)
Q=(0.15)(5.41) = 0.81

Qo = Allowable outflow / (AreaxRunoff coefficient)
Qo=(0.81) / (5.41 x 0.65) = 0.23 cfs/ac impervious

T_{100} = -25+SQRT(10312.5/Qo) = 186.59 minutes
V_{S100} = 16500xT_{100}/(T_{100}+25)-(40xQoxT_{100}) = 12,831.29 cf/ac impervious
V_{T100}=V_{S100}xAxC = 45,222 cf

VOLUME CALCULATIONS

E. VOLUMES

Post Detention Basin (Main Pond + Gas Station Pond)

Elev.	Area (sft.)	Avg. Area (sft.)	Depth (ft.)	Volume (cft.)	Cumulative Volume (cft.)
855	33,946				0
		37,169	1.0	37,169	
856	40,392				37,169
		43,694	1.0	43,694	
857	46,996				80,863
		50,383	1.0	50,383	
858	53,769				131,246
		57,238	1.0	57,238	
859	60,707				188,484
		64,698	1.0	64,698	
860	68,689				253,182
		73,513	1.0	73,513	
861	78,336				326,694
		83,892	1.0	83,892	
862	89,447				410,586
		96,157	1.0	96,157	
863	102,866				506,742
		110,996	1.0	110,996	
864	119,125				617,738

Post Pond Volume @ 863.04: 511,502 CF

BASED ON OUTLET CALCULATIONS - SEE SHEET C-14

FIRST FLUSH VOLUME	74,651	cf
ELEVATION x_{ff}	856.86	
BANKFULL VOLUME	311,514	cf
ELEVATION x_{bf}	860.79	
100-yr VOLUME	511,502	cf
ELEVATION x_{100}	863.04	

Existing Detention Basin (Gas Station)

Elev.	Area (sft.)	Avg. Area (sft.)	Depth (ft.)	Volume (cft.)	Cumulative Volume (cft.)
859	22				0
		450	1.0	450	
860	878				450
		2,067	1.0	2,067	
861	3,255				2,517
		5,092	1.0	5,092	
862	6,929				7,609
		9,842	1.0	9,842	
863	12,754				17,450
		17,009	1.0	17,009	
864	21,264				34,459

Existing Pond Volume @ 863.22: 21,192 CF

Existing Detention Basin (Main Pond)

Elev.	Area (sft.)	Avg. Area (sft.)	Depth (ft.)	Volume (cft.)	Cumulative Volume (cft.)
855	31,515				0
		35,730	1.0	35,730	
856	39,945				35,730
		43,146	1.0	43,146	
857	46,347				78,876
		50,868	1.0	50,868	
858	55,388				129,744
		59,916	1.0	59,916	
859	64,444				189,660
		69,069	1.0	69,069	
860	73,694				258,729
		78,334	1.0	78,334	
861	82,973				337,062
		88,702	1.0	88,702	
862	94,430				425,764
		98,564	1.0	98,564	
863	102,698				524,328
		108,147	1.0	108,147	
864	113,596				632,475

Existing Pond Volume @ 863.22: 548,121 CF

TOTAL DETENTION VOLUME @ 863.22: 569,313 CF

NET CHANGE CALCULATIONS

Redevelopment Area Surfaces

EXISTING CONDITIONS

Cover Type	Area (sf)	Area (ac)	C-factor
Building	-	-	0.95
Pavement	118,078	2.71	0.95
Pond	36560	0.84	1.0
TOTAL IMPERVIOUS		**3.55**	**AC**
Grass	81,088	1.86	0.15
TOTAL PERVIOUS		**1.86**	**AC**

PROPOSED CONDITIONS

Cover Type	Area (sf)	Area (ac)	C-factor
Building	28,894	0.66	0.95
Pavement	155,772	3.58	0.95
TOTAL IMPERVIOUS		**4.24**	**AC**
Grass	51,082	1.17	0.15
TOTAL PERVIOUS		**1.17**	**AC**
Net change in Impervious		**0.69**	**acres**
Net change in Pervious		**(0.69)**	**acres**

STORMWATER NARRATIVE

METHODOLOGY IN ACCORDANCE WITH CURRENT 2018 STANDARDS OF THE WASHTENAW COUNTY RESOURCES COMMISSIONER.

Overall Site Area: 54 acres
Detention Approved in 2007: 505,449 CF

Borings and test pits were excavated in November 2017 in close coordination with Washtenaw County Water Resources Commissioner. McDowell & Associates prepared an Infiltration Study and Soil Investigation Report dated November 28, 2017. Spinks-Oshtemo loamy sands covers the entire area of the redevelopment site. The site area exhibits exceptional infiltration characteristics with an average rate of 5.06 in/hr which includes a safety factor of 2.

The majority of the redevelopment site will be sheet-drained into two (2) infiltration areas with overflows into the main detention area. Three (3) sediment forebays are shown to accommodate the existing endsection outlets. The reconfigured pond will be cleaned, dredged at re-graded at a 5:1 maximum slope.

The methodology approved by the Water Resources Commissioner in determining the total required detention volume was to analyze the redevelopment area under both the 2007 rules and the 2019 rules. The difference in volume would be added to the total approved volume in 2007 for the overall site. The resulting calculated required volume is 511,720 CF.

By current 2019 rules, the maximum tributary runoff into the new infiltration areas reduced the required volume to 488,486 CF. The total post-development detention volume provided is 511,502 CF. Therefore, the re-development site stormwater management system adequately meets the current County standards and BMP requirements.

2019 RULES : REDEVELOPMENT AREA CALCULATIONS

W1 Determining Post-Development Cover Types
Areas, Curve Numbers & Runoff Coefficients

Rational Method Variables (required for 1st flush calculations)

Cover Type	Soil Type	Area (sf)	Area (ac)	Runoff Coefficient C	(C)(Area)
Building	A	10,788	0.25	0.95	0.24
Pavement	A	117,452	2.70	0.95	2.56
Grass	A	21,452	0.49	0.15	0.07
	TOTAL	149,692	3.44	CA Total	2.87
				Area Total	3.44
				Weighted C	0.83

NCRS Variables (required for bankfull and 100-yr calculations)
Pervious

Cover Type	Soil Type	Area (sf)	Area (ac)	Curve Number	(CN)(Area)
Grass	A	21,452	0.49	39	19.21
	TOTAL	21,452	0.49	CNA Total	19.21
				Area Total	0.49
				Weighted CN	39

NCRS Variables (required for bankfull and 100-yr calculations)
Impervious

Cover Type	Soil Type	Area (sf)	Area (ac)	Curve Number	(CN)(Area)
Building	A	10,788	0.25	98	24.27
Pavement	A	117,452	2.70	98	264.24
	TOTAL	128,240	2.94	CNA Total	288.51
				Area Total	2.94
				Weighted CN	98

W2 First Flush Runoff Calculations (V_{ff})

A. Vff= (1") (1'/12") (43560 cf/1ac) (AC)
A= 3.44 ac
C= 0.83
Vff= 10,364 cf

W3 Pre-development Bankfull Runoff Calculations ($V_{bf\text{-}pre}$)

A. 2-yr/24 storm Event P= 2.35 in
B. Meadow Soil Group A CN= 30
C. S= (1000/CN) - 10 23.3 in
D. Q= $(P\text{-}0.2S)^2$ / (P+0.8S) 0.26 in
E. Total Site Area (exc bmp's) 149,692 sf
F. $V_{bf\text{-}pre}$ = Q(1/12)Area 3,186 cf

W4 Pervious Cover Post-Development Bankfull Runoff Calculations ($V_{bf\text{-}per\text{-}post}$)

A. 2-yr/24 storm Event P= 2.35 in
B. Pervious Cover CN= 39
C. S= (1000/CN) - 10 15.6 in
D. Q= $(P\text{-}0.2S)^2$ / (P+0.8S) 0.04 in
E. Pervious Cover Area 21,452 sf
F. $V_{bf\text{-}per\text{-}post}$ = Q(1/12)Area 73 cf

W5 Impervious Cover Post-Development Bankfull Runoff Calculations ($V_{bf\text{-}imp\text{-}post}$)

A. 2-yr/24 storm Event P= 2.35 in
B. Impervious Cover CN= 98
C. S= (1000/CN) - 10 0.2 in
D. Q= $(P\text{-}0.2S)^2$ / (P+0.8S) 2.12 in
E. Impervious Cover Area 128,240 sf
F. $V_{bf\text{-}imp\text{-}post}$ = Q(1/12)Area 22,674 cf

W6 Pervious Cover Post-Development 100-year Runoff Calculations ($V_{t100\text{-}per\text{-}post}$)

A. 100-yr storm Event P= 5.11 in
B. Pervious Cover CN= 39
C. S= (1000/CN) - 10 15.6 in
D. $Q_{100\text{-}per}$= $(P\text{-}0.2S)^2$ / (P+0.8S) 0.22 in
E. Pervious Cover Area 21,452 sf
F. $V_{100\text{-}per\text{-}post}$ = Q(1/12)Area 398 cf

W7 Impervious Cover Post-Development 100-year Runoff Calculations ($V_{t100\text{-}imp\text{-}post}$)

A. 100-yr storm Event P= 5.11 in
B. Pervious Cover CN= 98
C. S= (1000/CN) - 10 0.2 in
D. $Q_{100\text{-}per}$= $(P\text{-}0.2S)^2$ / (P+0.8S) 4.87 in
E. Impervious Cover Area 128,240 sf
F. $V_{100\text{-}imp\text{-}post}$ = Q(1/12)Area 52,076 cf

W8 Time of Concentration ($T_{c\text{-}hrs}$)

Flow Type	K	Change in Elevation	Length (L)	Slope % (S*100%)	$S^{0.5}$	$V=K*S^{0.5}$	$Tc=L/(V*3600)$
Sheet Flow	0.48	1.34	103	1.30	1.14	0.55	0.05
Waterway	1.2	4.75	505	0.94	0.97	1.16	0.12

Total Time of Concentration (Tc-hrs)= 0.17

W9 Runoff Summary & Onsite Infiltration Requirement

A. Runoff Summary from Previous Worksheets

First Flush Volume (V^{ff})	10,364	cf
Pre-Development Bankfull Volume ($V_{bf\text{-}pre}$)	3,186	cf
Pervious Cover Post-development Bankfull Volume ($V_{bf\text{-}per\text{-}post}$)	73	cf
Impervious Cover Post-development Bankfull Volume ($V_{bf\text{-}imp\text{-}post}$)	22,674	cf
Total BF Volume ($V_{bf\text{-}post}$)	22,746	cf
Pervious Cover Post-development 100-yr Volume ($V_{t100\text{-}per\text{-}post}$)	398	cf
Impervious Cover Post-development 100-yr Volume ($V_{t100\text{-}imp\text{-}post}$)	52,076	cf
Total 100-yr Volume (V_{100})	52,475	cf

B. Determine Onsite Infiltration Requirement

Subtract Pre-development Bankfull from Post-development Bankfull Volume		
Total Post-development Bankfull Volume ($V_{bf\text{-}post}$)	22,746	cf
Pre-development Bankfull Runoff Volume ($V_{bf\text{-}pre}$)	3,186	cf
Bankfull Volume Difference	19,561	cf
Use greater of Bankfull Volume Difference vs First Flush Volume		
BF Vol Diff	19,561	cf
FF Vol	10,364	cf
Onsite Infiltration Requirement (V_{inf})	19,561	cf

W10 Detention / Retention Requirement

A. Q_{ff}=238.6 $T_c^{-0.82}$	1,006.70	cfs/in-mi^2
B. Total Site Area exc Self-crediting BMP's	3.44	ac
C. Q_{100}=Q_{100per}+$Q_{100\text{-}imp}$	5.10	in
D. Peak Flow (PF)=(Q_{ff})(Q_{100})(Area) / 640	27.5	cfs
E. △ = PF-0.15(Area)	27.0	cfs
F. V_{det} = (△ /PF) V_{100}-V_{inf}	51,493	cf *
*do not include infiltration yet		
Forebay Requirement		
V_{fb} = .05*V_{det}	2,575	cf

W11 BMP'S & Volume Credits

BIORETENTION REQUIREMENTS (PGS 61-64)

Bioretention Area 1

Total Area (elevation 68.5)	9,016	sf
Bed Bottom Area (elevation 67.8)	7,474	sf
Average Bed Area	8,245	sf
Depth (8")	0.67	ft
Infiltration rate	5.06	in/hr ***(SEE INFILTRATION STUDY BY MCDOWELL)***
Infiltration period	6.0	hrs

Storage Volume = (Avg bed area)* (Max design water depth)
(8245) x (0.67) = 5,524 cf

Infiltration Volume = (Bed bottom area)*(Infiltration rate)*(Infiltration period) /12
(7474) x (5.06) x (6) /12 = 18,909 cf
Bioretention 1 Voume Reduction: 24,433 cf > **12,675 cf** (use for max tributary runoff see Infiltration #1 runoff calcs)

Bioretention Area 2

Total Area (elevation 68.5)	7,136	sf
Bed Bottom Area (elevation 67.8)	5,400	sf
Average Bed Area	6,268	sf
Depth	0.67	ft
Infiltration rate	5.06	in/hr ***(SEE INFILTRATION STUDY BY MCDOWELL)***
Infiltration period	6.0	hrs

Storage Volume = (Avg bed area)* (Max design water depth)
(6268) x (0.67) = 4,200 cf

Infiltration Volume = (Bed bottom area)*(Infiltration rate)*(Infiltration period) /12
(5400) x (5.06) x (6) /12 = 13,662 cf
Bioretention 2 Voume Reduction: 17,862 cf > **10,559 cf** (use for max tributary runoff see Infiltration #2 runoff calcs)

TOTAL VOLUME REDUCTION 23,234 cf

BMP	Avg bed Area (sf)	Storage Volume (cf) Surface	Storage Volume (cf) Soil	Infiltration Rate (in/hr)	Infiltration Volume (cf)	Total Volume Reduction (cf)	USE MAX RUNOFF
Bioretention 1	8245	5,524	0	5.06	18909	24433	**12675**
Bioretention 2	6268	4,200	0	5.06	13662	17862	**10559**

Total Volume Reduction Credit by BMP's (cf)	**23234**
Runoff Volume Infiltration Requirement (V_{inf})	-19561
Runoff Volume Credit (cf)	3673

W13 Summary

FOREBAY REQUIRED		
Minimum Volume Required	2,575	cf
Provided Forebay 1 Volume	559	cf
Provided Forebay 2 Volume	4,170	cf
Provided Forebay 3 Volume	1,026	cf
TOTAL PROVIDED FOREBAY VOLUME	**5,755**	**cf**
INFILTRATION REQUIRED		
Minimum Onsite Infiltration Requirement V_{inf}	19,561	cf
Provided Infiltration Volume	23,234	cf
% Minimum Required Infiltration Provided	119%	
DETENTION REQUIRED		
Req'd 100 yr volume for ex facility approved in 2007	505,449	cf
2019 Required Volume for re-development area	51,493	cf
2007 Required Volume for re-development area	(45,222)	cf
Provided Infiltration Volume	(23,234)	cf
TOTAL REQUIRED DETENTION VOLUME	**488,486**	**cf**
DETENTION PROVIDED		
Existing detention volume surveyed 2017	569,313	cf
TOTAL PROVIDED POST DETENTION VOLUME	**511,502**	**cf**

PROJECT NUMBER: 53549
DATE: 02-01-18
SCALE: AS NOTED
DESIGNED BY: AJC
DRAWN BY: AJC
CHECKED BY:
APPROVED BY:

REVISIONS
02-15-19 COUNTY REVISIONS ENGINEERING SUBMITTAL
04-02-19 ENG/WRC REVISIONS
05-28-19 ENG/WRC REVISIONS
05-30-19 EGLE WM REVISIONS
07-03-19 WRC REVISIONS
08-09-19 WRC REVISIONS
09-23-19 WRC REVISIONS

ENGINEERING FOR RESULTS
13500 REECK ROAD
SOUTHGATE, MI 48195
(734) 759-1600
FAX (734) 282-6566
WWW.HENGINEERS.COM
HENNESSEY ENGINEERS, INC

TITLE
STORMWATER MANAGEMENT PLAN
SCIO MEIJER OUTLOTS
SCIO TOWNSHIP
WASHTENAW COUNTY, MICHIGAN

SHEET
C-13

E:\50000's\53000's\Scio Township\53549 Airlg Scio\SCIO MASTER2.dwg — ST MGMT 2 — (9/23/2019 11:09 AM)

F. New Development Areas 1-6 for Outlet Calculations
2019 Washtenaw County 100 Yr Requirements

W1 Determining Post-Development Cover Types
Areas, Curve Numbers & Runoff Coefficients

Rational Method Variables (required for 1st flush calculations)

Cover Type	Soil Type	Area (sf)	Area (ac)	Runoff Coefficient C	(C)(Area)
Building	A	28,894	0.66	0.95	0.63
Pavement	A	155,772	3.58	0.95	3.40
Grass	A	51,082	1.17	0.15	0.18
	TOTAL	235,748	5.41	CA Total	4.20
				Area Total	5.41
				Weighted C	0.78

NCRS Variables (required for bankfull and 100-yr calculations)

Pervious

Cover Type	Soil Type	Area (sf)	Area (ac)	Curve Number	(CN)(Area)
Grass	A	51,082	1.17	39	45.73
	TOTAL	51,082	1.17	CNA Total	45.73
				Area Total	1.17
				Weighted CN	39

NCRS Variables (required for bankfull and 100-yr calculations)

Impervious

Cover Type	Soil Type	Area (sf)	Area (ac)	Curve Number	(CN)(Area)
Building	A	28,894	0.66	98	65.00
Pavement	A	155,772	3.58	98	350.45
	TOTAL	184,666	4.24	CNA Total	415.46
				Area Total	4.24
				Weighted CN	98

W2 First Flush Runoff Calculations (V_{ff})

A. Vff= (1") (1'/12") (43560 cf/1ac) (AC)

A= 5.41 ac

C= 0.78

Vff= 15,318 cf ($V_{ffnew2019}$)

W3 Pre-development Bankfull Runoff Calculations ($V_{bf\text{-}pre}$)

A. 2-yr/24 storm Event P=	2.35 in
B. Meadow Soil Group A CN=	30
C. S= (1000/CN) - 10	23.3 in
D. Q= (P-0.2S)^2 / (P+0.8S)	0.26 in
E. Total Site Area (exc bmp's)	235,748 sf
F. $V_{bf\text{-}pre}$ = Q(1/12)Area	5,017 cf

W4 Pervious Cover Post-Development
Bankfull Runoff Calculations ($V_{bf\text{-}per\text{-}post}$)

A. 2-yr/24 storm Event P=	2.35 in
B. Pervious Cover CN=	39
C. S= (1000/CN) - 10	15.6 in
D. Q= (P-0.2S)^2 / (P+0.8S)	0.04 in
E. Pervious Cover Area	51,082 sf
F. $V_{bf\text{-}per\text{-}post}$ = Q(1/12)Area	173 cf

W5 Impervious Cover Post-Development
Bankfull Runoff Calculations ($V_{bf\text{-}imp\text{-}post}$)

A. 2-yr/24 storm Event P=	2.35 in
B. Impervious Cover CN=	98
C. S= (1000/CN) - 10	0.2 in
D. Q= (P-0.2S)^2 / (P+0.8S)	2.12 in
E. Impervious Cover Area	184,666 sf
F. $V_{bf\text{-}imp\text{-}post}$ = Q(1/12)Area	32,650 cf

W6 Pervious Cover Post-Development
100-year Runoff Calculations ($V_{100\text{-}per\text{-}post}$)

A. 100-yr storm Event P=	5.11 in
B. Pervious Cover CN=	39
C. S= (1000/CN) - 10	15.6 in
D. $Q_{100\text{-}per}$= (P-0.2S)^2 / (P+0.8S)	0.22 in
E. Pervious Cover Area	51,082 sf
F. $V_{100\text{-}per\text{-}post}$ = Q(1/12)Area	949 cf

W7 Impervious Cover Post-Development
100-year Runoff Calculations ($V_{100\text{-}imp\text{-}post}$)

A. 100-yr storm Event P=	5.11 in
B. Impervious Cover CN=	98
C. S= (1000/CN) - 10	0.2 in
D. $Q_{100\text{-}per}$= (P-0.2S)^2 / (P+0.8S)	4.87 in
E. Impervious Cover Area	184,666 sf
F. $V_{100\text{-}imp\text{-}post}$ = Q(1/12)Area	74,990 cf

W8 Time of Concentration ($T_{c\text{-}hrs}$)

Flow Type	K	Change in Elevation	Length (L)	Slope % (S*100%)	$S^{0.5}$	$V=K*S^{0.5}$	$Tc=L/(V*3600)$
Sheet Flow	0.48	1.34	103	1.30	1.14	0.55	0.05
Waterway	1.2	4.75	505	0.94	0.97	1.16	0.12

Total Time of Concentration (Tc-hrs)= 0.17

W9 Runoff Summary & Onsite Infiltration Requirement

A. Runoff Summary from Previous Worksheets

First Flush Volume (V^{ff})	15,318	cf
Pre-Development Bankfull Volume ($V_{bf\text{-}pre}$)	5,017	cf
Pervious Cover Post-development Bankfull Volume ($V_{bf\text{-}per\text{-}post}$)	173	cf
Impervious Cover Post-development Bankfull Volume ($V_{bf\text{-}imp\text{-}post}$)	32,650	cf
Total BF Volume ($V_{bf\text{-}post}$)	32,824	cf ($V_{bfnew2019}$)
Pervious Cover Post-development 100-yr Volume ($V_{100\text{-}per\text{-}post}$)	949	cf
Impervious Cover Post-development 100-yr Volume ($V_{100\text{-}imp\text{-}post}$)	74,990	cf
Total 100-yr Volume (V_{100})	75,938	cf

B. Determine Onsite Infiltration Requirement

Subtract Pre-development Bankfull from Post-development Bankfull Volume		
Total Post-development Bankfull Volume ($V_{bf\text{-}post}$)	32,824	cf
Pre-development Bankfull Runoff Volume ($V_{bf\text{-}pre}$) -	5,017	cf
Bankfull Volume Difference	27,807	cf
Use greater of Bankfull Volume Difference vs First Flush Volume		
BF Vol Diff	27,807	cf
FF Vol	15,318	cf
Onsite Infiltration Requirement (V_{inf})	27,807	cf

W10 Detention / Retention Requirement

A. Q_6=238.6 $T_c^{-0.82}$	1,006.70	cfs/in-mi^2
B. Total Site Area exc Self-crediting BMP's	5.41	ac
C. Q_{100}=Q_{100per}+$Q_{100\text{-}imp}$	5.10	in
D. Peak Flow (PF)=(Q_6)(Q_{100})(Area) / 640	43.4	cfs
E. △ = PF-0.15(Area)	42.6	cfs
F. V_{det} = (△ /PF) V_{100}-V_{inf}	74,517	cf * ($V_{100new2019}$)

NEW DEVELOPMENT AREAS 1-6
2019 CALCULATIONS FOR OUTLET
FIRST FLUSH, BANKFULL, 100-YR

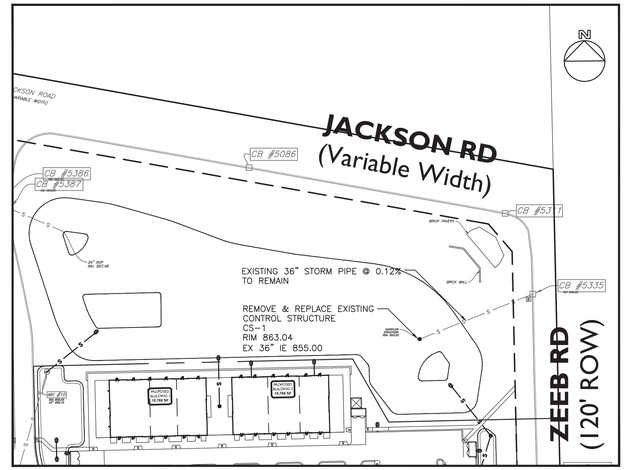

1 DETENTION POND AREA
1" = 100'

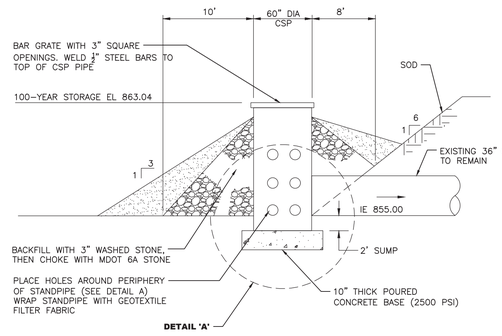

SECTION

2 PROPOSED OUTLET CONTROL STRUCTURE CS-1
NTS

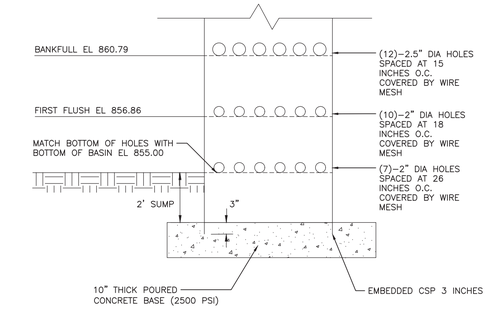

3 DETAIL 'A' - CONTROL STRUCTURE CS-1
NTS

G. OUTLET CALCULATIONS
2019 Washtenaw County 100-Yr Requirements

W2 First Flush Runoff Calculations (V_{ff})

$V_{ff} = V_{ff2007SSOE} + V_{ffnew2019} - V_{ffnew2007} - V_{ffinf1} - V_{ffinf2}$

$V_{ff2007SSOE}$ =	70,567 cf
$V_{ffnew2019}$ =	15,318 cf
$V_{ffnew2007}$ = (0.5")/12) * 43560 * 5.41 * 0.65	6,397 cf
V_{ffinf1} =	2,619 cf
V_{ffinf2} =	2,218 cf
V_{ff} =	**74,651 cf**

W9 Bankfull Runoff Calculations (V_{bf})

$V_{bf} = V_{bf2007SSOE} + V_{bfnew2019} - V_{bfnew2007} - V_{bfinf1} - V_{bfinf2}$

$V_{bf2007SSOE}$ =	317,552 cf
$V_{bfnew2019}$ =	32,824 cf
$V_{bfnew2007}$ = (2.25")/12) * 43560 * 5.41 * 0.65	28,785 cf
V_{bfinf1} =	5,517 cf
V_{bfinf2} =	4,560 cf
V_{bf} =	**311,514 cf**

W10 100-yr Volume Calculations (V_{100})

$V_{100} = V_{1002007SSOE} + V_{100new2019} - V_{100new2007} - V_{100inf1} - V_{100inf2}$

$V_{1002007SSOE}$ =	505,449 cf
$V_{100new2019}$ =	74,517 cf
$V_{100new2007}$ = V_S (A)(C)	
Q_6 = 0.15 cfs/acre	
0.15 x 5.41 ac	
0.81 cfs	
Q_6= Q_6/AC	
0.81 / (5.41)(0.65)	
0.23 cfs /ac-imp	
T= =-25 + SQRT(10312.5/ 0.23)	
186.7 min	
V_s= (16500)(186.7) / (186.7 + 25) - 40(0.23)(186.7)	
12,833.8 cf/ac-imp	
$V_{100new2007}$ = (12833.8)(5.41)(0.65)	
45,231 cf	
$V_{100inf1}$ =	12,675 cf
$V_{100inf2}$ =	10,559 cf
V_{100} =	**511,502 cf**

3-Stage Outlet Design (infiltration < first flush)

Infiltration 23,234 CF < First Flush 143,095 CF

FIRST FLUSH DISCHARGE

Bottom x_{bot}	855.00
First Flush Volume V_{ff}	74,651 cf
First Flush Elevation x_{ff}	856.86
Bankfull Volume V_{bf}	311,514 cf
Bankfull Elevation x_{bf}	860.79
100 Yr Volume V_{100}	511,502 cf
100-yr Elevation x_{100}	863.04

Q_{allow} = 0.15 cfs/ acre
(0.15 cfs)(54 ac) 8.10 cfs

$Q_{ffmin} = V_{ff}/T_{24}$
(74651) / (24hr)(3600sec) 0.86 cfs

h_{ave} = 2/3 (x_{ff} - x_{bot})
2/3 (856.86 - 855.00) 1.24 ft

Aff = Qff / 0.62 SQRT($2gh_{ave}$)
0.86 / (0.62)(SQRT(2)(32.2)(1.24)) 0.1559 ft

Maximum #$_{orif}$ = A_{ff}/A_{orif}
Input orifice diameter 2 in
A_{orif} 0.02182 sf
0.1559 / .02182 sf 7
Input #$_{orif}$ holes 7
Q_{ffact}=(0.62)(#$_{orif}$)($A_{orifact}$)(sqrt($2gh_{ave}$))
(0.62)(7)(.02182)(sqrt 2(32.2)(1.24)) 0.85 cfs

$T_{ffact} = V_{ff}/Q_{ffact}$
74651 / (0.85)(3600 sec) 24.5 hrs
24.5 > 24 hrs OK

Use	7	2" dia holes
at	elevation	855.00

BANKFULL DISCHARGE

A. Check storage between 36-48 hours

h_{ave} = 2/3 (x_{bf} - x_{bot})
2/3 (860.79 - 855.00) 3.86 ft

Q_{bf}=(0.62)(#$_{orif}$)($A_{orifact}$)(sqrt($2gh_{ave}$))
(0.62)(7)(.02182)(sqrt 2(32.2)(3.86)) 1.49 cfs

$T_{bf} = V_{bf}/Q_{bf}$
311514 / (1.27)(3600 sec) 58.0 hrs
58.00 > 48 hrs & >36 hrs Additional Orifices reqd

B. Establish Target Time < 48 hours

$V_{rem} = V_{bf} - V_{ff}$
311514 - 74651 236,862 cf

T_{target} 44 hrs

$T_{rem} = T_{target} - T_{ffact}$
44 - 24.5 hrs 19.5 hrs

C. Calculate volume released for remaining time

h_{ffave} = 2/3 (x_{bf} - x_{ff}) + (x_{ff} - x_{bot})
2/3 (860.79 - 856.86) + (856.86-855.00) 4.48 ft

Volume Released by 2" orifices in 19.5 hrs
Q_{bf+bf} = (0.62)(#$_{orif}$)($A_{orifact}$)(sqrt($2gh_{ave}$))
(0.62)(7)(.02182)(sqrt 2(32.2)(4.48)) 1.61 cfs

V_{ff+bf} = (T_{rem}) Q_{ff+bf}
(19.5) (1.61) (3600 sec) 113,022 cf

D. Calculate Vbf and Max # Orifices

$V_{bf} = V_{rem} - V_{ff+bf}$
236862 - 113022 123,840 cf

$Q_{bf} = V_{bf}/T_{rem}$
123840 / (19.5 x 3600) 1.764 cfs

h_{bfave} = 2/3 (x_{bf} - x_{ff})
2/3 (860.79 - 856.86) 2.62 ft

A_{bf} = Q_{bf}/ (0.62*sqrt($2gh_{bfave}$))
(1.764) / (0.62)(sqrt(2)(32.2)(2.62) 0.2190 sf

Maximum #$_{orif}$ = A_{bf}/A_{orif}
Input orifice diameter 2 in
A_{orif} 0.02182 sf
0.2095 / .02182 sf 10

E. Actual Detention time

Q_{bfact} = (0.62)(#$_{orif}$)($A_{orifact}$)(sqrt($2gh_{bfave}$))
(0.62)(10)(.02182)(sqrt(2)(32.2)(2.62)) 1.757 cfs

T_{bfact}=T_{ffact} + (V_{rem} / (((Q_{ff+bf} + Q_{bfact}) (3600 sec)))
24.5+ 236862/ (1.61+1.757)(3600) 44.0 hr
44.0 < 48 hrs & >36 hrs OK

Use	10	2" dia holes
at	x_{bf} elevation	856.86

100 YEAR STORM (1% STORM)

Q_{allow} = 0.15 cfs/ acre 8.10 cfs

A. Orifice size to release 100-yr volume

Q_{ff}+Q_{bf} = 0.62(#$_{ffunit}$)(A_{ffunit})sqrt((2g(x_{100}-x_{bot})) + .62(#$_{bfunit}$)(A_{bfunit})sqrt(2g(x_{100}-x_{ff}))
.62)(7)(.02182)sqrt((64.4)(863.04-855.00)) + .62(10)(.02182)sqrt(64.4(863.04-856.86))
Qff+Qbf = 2.155 + 2.699
= 4.854 cfs

$Q_{100max} = Q_{allow} - (Q_{ff}+Q_{bf})$
8.10 - 4.854 3.25 cfs

$A_{100max} = Q_{100max}$ / .62sqrt(2g(x_{100} - x_{bf}))
3.25 / .62sqrt(64.4(863.04-860.79)) 0.435 sf

Maximum #$_{orif}$ = A/A_{orif}
Input orifice diameter 2.5 in
A_{orif} 0.0341 sf
0.308 / .0341 sf 12.8 holes

B. Check not to exceed allowable flow rate

Use **12** holes

Q_{ff} + Q_{bf} + 0.62(#$_{orif}$)(A_{100})sqrt(2gh_{100ssc}) < Q_{allow}
4.825 + .62(13)(.0341)(sqrt((64.4(863.04-860.79)
OK 7.9 cfs < 8.1

Use	12	2.5" dia holes
at	x_{bf} elevation	860.79

C. Check 72-hour discharge

h_{allave} = 2/3 (x_{100} - x_{bf}) + (x_{bf} - x_{bot})
2/3 (863.04-860.79) + (860.79-855) 7.29 ft

Q_{all} = .62(#$_{orif}$)(A_{forif})(sqrt($2gh_{allave}$))
.62)(7)(.02182)(sqrt(64.4(7.29) 2.05 cfs

D. Determine Bankfull discharge w/all contributing

h_{bfave} = 2/3 (x_{100}-x_{bf}) + (x_{bf}-x_{ff})
2/3 (863.04-860.79) + (860.79-856.86) 5.43 ft

Q_{bf+100}=.62(#$_{bforif}$)(A_{bforif})(sqrt($2gh_{bfave}$))
.62(12)(.0341)(sqrt(64.4)(5.43)) 4.74 cfs

E. Determine average discharge 100-yr orifices

h_{100ave} = 2/3 (x_{100}-x_{ff})
2/3 (863.04-860.79) 1.50 ft

Q_{100ave}=.62(#$_{100orif}$)($A_{100orif}$)(sqrt($2gh_{100ave}$))
(.62)(12)(.0341)(sqrt((64.4)(1.50))) 2.49 cfs

F. Confirm 100yr Volume discharge within 72 hours

$V_{rem} = V_{100} - V_{bf}$
511502-311514 199,988 cf

$T_{100} = T_{bf} + (V_{rem} / (Q_{all} + Q_{bf+100} + Q_{100ave}))$
44.0+(199988/((2.05+4.74+2.49)(3600)) 50.0 hr
50.0 < 72 hrs OK

2019 OUTLET CALCULATIONS

ENGINEERING FOR RESULTS
13500 REECK ROAD
SOUTHGATE, MI 48195
(734) 759-1600
FAX (734) 282-6566
WWW.HENGINEERS.COM
HENNESSEY ENGINEERS, INC

PROJECT NUMBER:	53549
DATE:	02-01-18
SCALE:	AS NOTED
DESIGNED BY:	AJC
DRAWN BY:	AJC
CHECKED BY:	
APPROVED BY:	

REVISIONS

02-15-19 COUNTY REVISIONS ENGINEERING SUBMITTAL
04-02-19 ENG/WRC REVISIONS
05-28-19 ENG/WRC REVISIONS
05-30-19 EGLE WM REVISIONS
07-03-19 WRC REVISIONS
08-09-19 WRC REVISIONS
09-23-19 WRC REVISIONS

TITLE
OUTLET DESIGN
SCIO MEIJER OUTLOTS
SCIO TOWNSHIP
WASHTENAW COUNTY, MICHIGAN

SHEET
C-14

E:\50000's\53000's\Scio Township\53549 Airig Scio\SCIO MASTER2.dwg — OUTLET — (9/23/2019 11:11 AM)

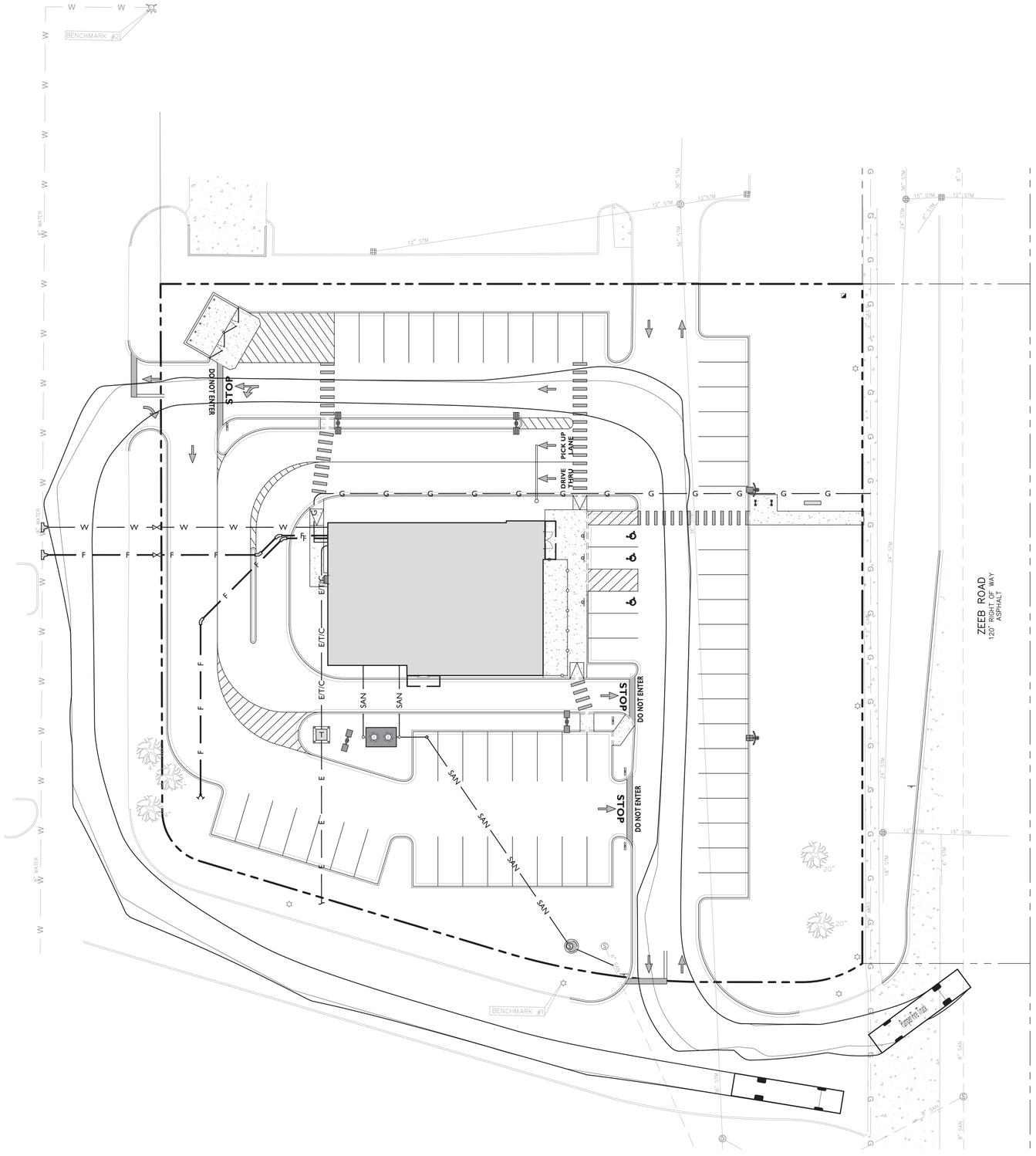

SYMBOL	DESCRIPTION
— — —	PROPERTY LINE

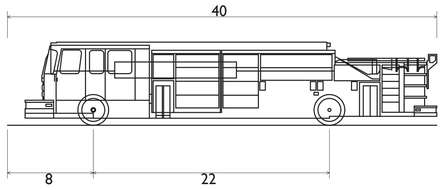

Pumper Fire Truck	
Overall Length	40.000ft
Overall Width	8.167ft
Overall Body Height	7.745ft
Min Body Ground Clearance	0.656ft
Track Width	8.167ft
Lock-to-lock time	5.00s
Max Wheel Angle	45.00°

20' 0' 20' 40'
GRAPHIC SCALE IN FEET
1" = 20'

ISSUE	DATE	BY	DESCRIPTION
3.2	11/02/2021	MG	REVISED PER STAFF REPORT DATED 10/28/2021
3.1	10/05/2021	MPH	REVISED PER ASPHALT PARKING AREA
3	09/22/2021	MG	FOR SITE PLAN APPROVAL
2	05/12/2021	MH	FOR CONDITIONAL USE APPROVAL
1	04/01/2021	AF	FOR CLIENT REVIEW

NOT APPROVED FOR CONSTRUCTION

STONEFIELD engineering & design
Detroit, MI · Rutherford, NJ · New York, NY
Princeton, NJ · Tampa, FL · Boston, MA
www.stonefieldeng.com
607 Shelby Suite 200, Detroit, MI 48226
Phone 248.247.1115

SITE DEVELOPMENT PLAN

140 S. ZEEB ROAD

PROPOSED FAST FOOD RESTAURANT

PARCEL ID: H-08-21-400-035
140 S. ZEEB ROAD
TOWNSHIP OF SCIO
WASHTENAW COUNTY, MICHIGAN 48103

STATE OF MICHIGAN
JONATHAN REID COORSEY
ENGINEER
No. 6201069428
LICENSED PROFESSIONAL ENGINEER

STONEFIELD engineering & design

SCALE: 1" = 20' | PROJECT ID: DET-200325

TITLE:

FIRE TRUCK CIRCULATION EXHIBIT

DRAWING:

EX-1

V:\DET\2020\DET-200325-ALRIG-140 ZEEB ROAD, SCIO TOWNSHIP, MI\CAD\EXHIBITS\TRASH TRUCK EXHIBIT\EX-01-02-TRCK-EXBT.DWG

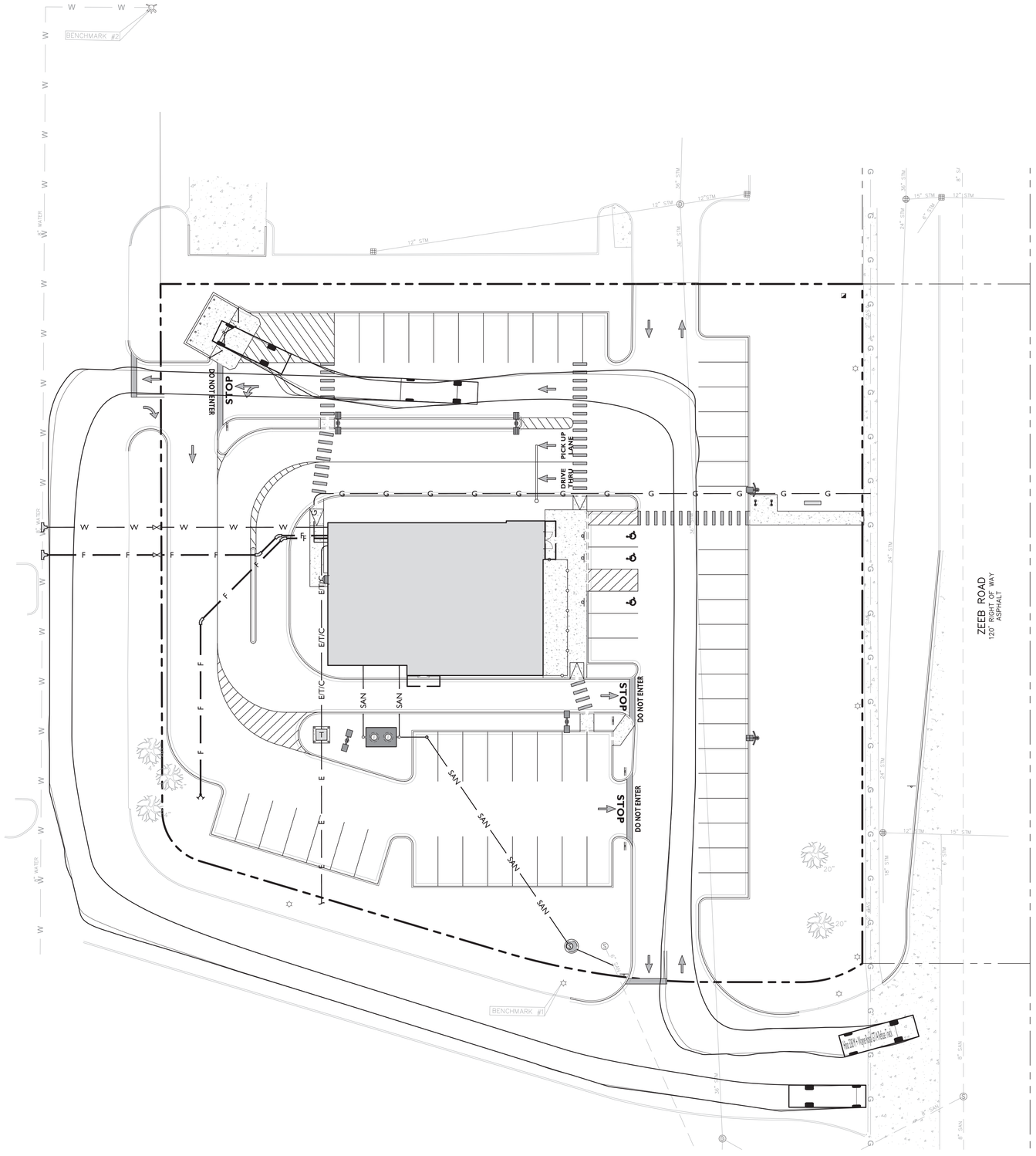

SYMBOL	DESCRIPTION
— — —	PROPERTY LINE

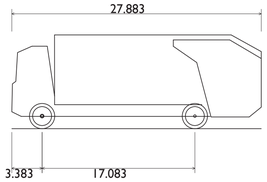

Hino 338 M + Wayne Royal GT14 Refuse Truck

Overall Length	27.883ft
Overall Width	8.042ft
Overall Body Height	10.488ft
Min Body Ground Clearance	1.318ft
Track Width	8.042ft
Lock-to-lock time	6.00s
Curb to Curb Turning Radius	27.400ft

20' 0' 20' 40'
GRAPHIC SCALE IN FEET
1" = 20'

ISSUE	DATE	BY	DESCRIPTION
3.2	11/02/2021	MG	REVISED PER STAFF REPORT DATED 10/28/2021
3.1	10/05/2021	MPH	REVISED PER ASPHALT PARKING AREA
3	09/22/2021	MG	FOR SITE PLAN APPROVAL
2	05/12/2021	MH	FOR CONDITIONAL USE APPROVAL
1	04/01/2021	AF	FOR CLIENT REVIEW

NOT APPROVED FOR CONSTRUCTION

STONEFIELD engineering & design
Detroit, MI · Rutherford, NJ · New York, NY
Princeton, NJ · Tampa, FL · Boston, MA
www.stonefieldeng.com
607 Shelby Suite 200, Detroit, MI 48226
Phone 248.247.1115

SITE DEVELOPMENT PLAN

140 S. ZEEB ROAD

PROPOSED FAST FOOD RESTAURANT

PARCEL ID: H-08-21-400-035
140 S. ZEEB ROAD
TOWNSHIP OF SCIO
WASHTENAW COUNTY, MICHIGAN 48103

STATE OF MICHIGAN
JONATHAN REID COORSEY
ENGINEER
No. 2101069428
LICENSED PROFESSIONAL ENGINEER

STONEFIELD engineering & design

SCALE: 1" = 20' | PROJECT ID: DET-200325

TITLE:

TRASH TRUCK CIRCULATION EXHIBIT

DRAWING:

EX-2

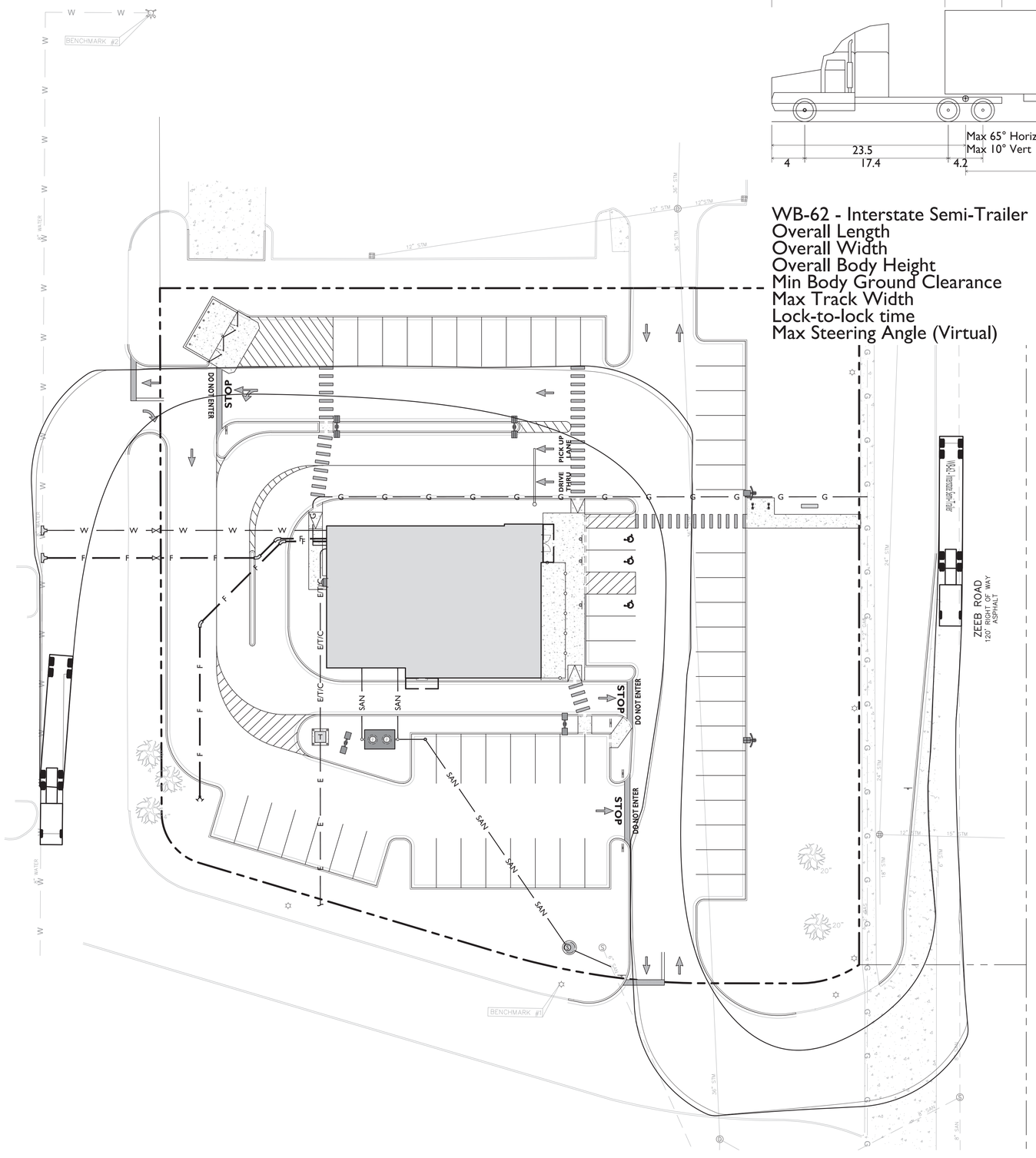

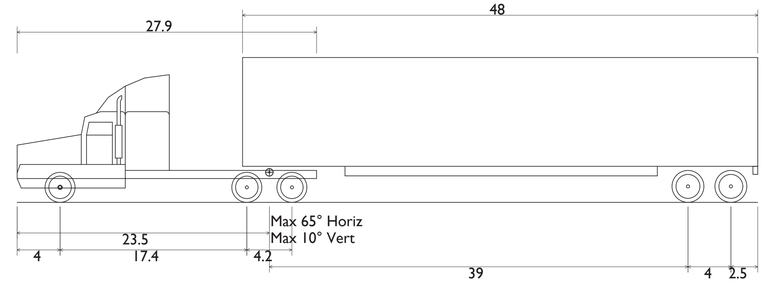

WB-62 - Interstate Semi-Trailer	
Overall Length	69.000ft
Overall Width	8.500ft
Overall Body Height	13.500ft
Min Body Ground Clearance	1.334ft
Max Track Width	8.500ft
Lock-to-lock time	6.00s
Max Steering Angle (Virtual)	28.40°

SYMBOL	DESCRIPTION
— — —	PROPERTY LINE

20' 0' 20' 40'
GRAPHIC SCALE IN FEET
1" = 20'

ISSUE	DATE	BY	DESCRIPTION
3.2	11/02/2021	MG	REVISED PER STAFF REPORT DATED 10/28/2021
3.1	10/05/2021	MPH	REVISED PER ASPHALT PARKING AREA
3	09/22/2021	MG	FOR SITE PLAN APPROVAL
2	05/12/2021	MH	FOR CONDITIONAL USE APPROVAL
1	04/01/2021	AF	FOR CLIENT REVIEW

NOT APPROVED FOR CONSTRUCTION

STONEFIELD engineering & design
Detroit, MI · Rutherford, NJ · New York, NY
Princeton, NJ · Tampa, FL · Boston, MA
www.stonefieldeng.com
607 Shelby Suite 200, Detroit, MI 48226
Phone 248.247.1115

SITE DEVELOPMENT PLAN

140 S. ZEEB ROAD

PROPOSED FAST FOOD RESTAURANT

PARCEL ID: H-08-21-400-035
140 S. ZEEB ROAD
TOWNSHIP OF SCIO
WASHTENAW COUNTY, MICHIGAN 48103

STATE OF MICHIGAN
JONATHAN REID COOKSEY
ENGINEER
No. 2101069428
LICENSED PROFESSIONAL ENGINEER

STONEFIELD engineering & design

SCALE: 1" = 20' | PROJECT ID: DET-200325

TITLE:
DELIVERY TRUCK (WB-62) CIRCULATION EXHIBIT

DRAWING:
EX-3

V:\DET\2020\DET-200325-ALRIG-140 ZEEB ROAD, SCIO TOWNSHIP, MI\CADD\EXHIBITS\TRASH TRUCK EXHIBIT\EX-01-02-TRCK-EXBT.DWG

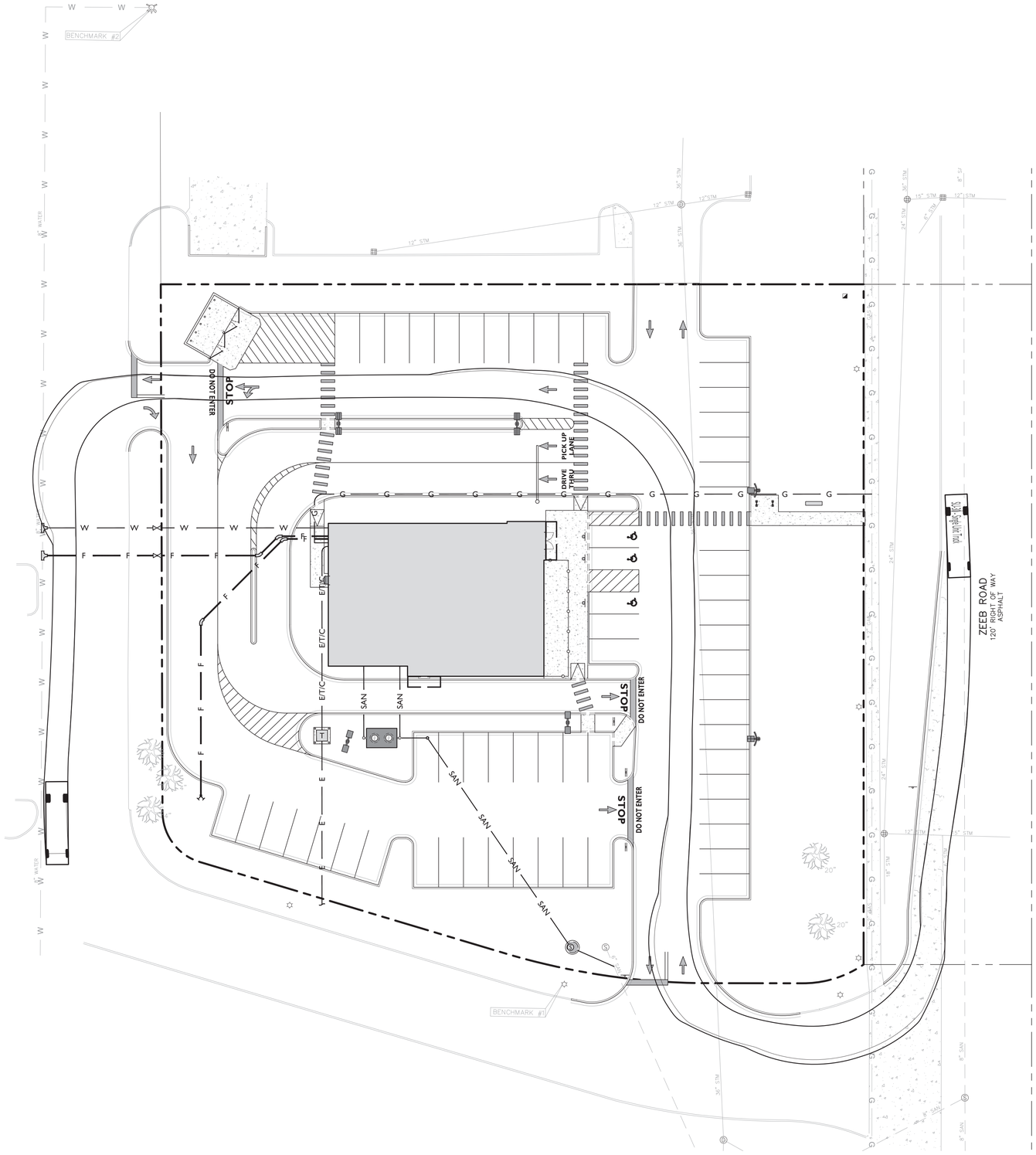

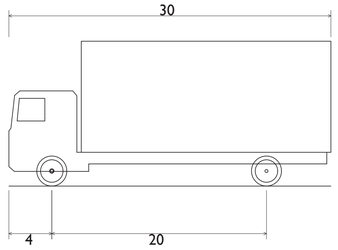

SYMBOL	DESCRIPTION
— — —	PROPERTY LINE

SU-30 - Single Unit Truck	
Overall Length	30.000ft
Overall Width	8.000ft
Overall Body Height	13.500ft
Min Body Ground Clearance	1.367ft
Track Width	8.000ft
Lock-to-lock time	5.00s
Max Steering Angle (Virtual)	31.80°

20' 0' 20' 40'
GRAPHIC SCALE IN FEET
1" = 20'

ISSUE	DATE	BY	DESCRIPTION
3.2	11/02/2021	MG	REVISED PER STAFF REPORT DATED 10/28/2021
3.1	10/05/2021	MPH	REVISED PER ASPHALT PARKING AREA
3	09/22/2021	MG	FOR SITE PLAN APPROVAL
2	05/12/2021	MH	FOR CONDITIONAL USE APPROVAL
1	04/01/2021	AF	FOR CLIENT REVIEW

NOT APPROVED FOR CONSTRUCTION

STONEFIELD engineering & design
Detroit, MI · Rutherford, NJ · New York, NY
Princeton, NJ · Tampa, FL · Boston, MA
www.stonefieldeng.com
607 Shelby Suite 200, Detroit, MI 48226
Phone 248.247.1115

SITE DEVELOPMENT PLAN

140 S. ZEEB ROAD

PROPOSED FAST FOOD RESTAURANT

PARCEL ID: H-08-21-400-035
140 S. ZEEB ROAD
TOWNSHIP OF SCIO
WASHTENAW COUNTY, MICHIGAN 48103

STATE OF MICHIGAN
JONATHAN REID COOKSEY
ENGINEER
No. 201069428
LICENSED PROFESSIONAL ENGINEER

STONEFIELD engineering & design

SCALE: 1" = 20' | PROJECT ID: DET-200325

TITLE:
DELIVERY TRUCK (SU-30) CIRCULATION EXHIBIT

DRAWING:
EX-4

V:\DET\2020\DET-200325-ALRIG-140 ZEEB ROAD, SCIO TOWNSHIP, MI\CADD\EXHIBITS\TRASH TRUCK EXHIBIT\EX-01-02-TRCK-EXBT.DWG

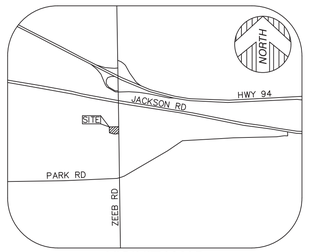

VICINITY MAP
(NOT TO SCALE)

PARKING

NO MARKED PARKING ON SITE

PARCEL AREA

75,183± SQUARE FEET = 1.726± ACRES

BASIS OF BEARING

NORTH 00°59'10" WEST, BEING THE CENTERLINE OF ZEEB ROAD, AS DESCRIBED.

BENCHMARK

BENCHMARK #1
CHISELED SQUARE ON TOP OF LIGHTPOLE BASE ALONG NORTH SIDE OF ENTRANCE, 109'± FROM WESTERLY RIGHT OF WAY LINE OF ZEEB ROAD.
ELEVATION = 878.20' (NAVD 88)

BENCHMARK #2
ARROW ON FIRE HYDRANT, 100'± NORTH OF NORTHWEST PROPERTY CORNER.
ELEVATION = 872.27' (NAVD 88)

SURVEYOR'S NOTES

1. THE UNDERGROUND UTILITIES SHOWN HAVE BEEN LOCATED FROM FIELD SURVEY INFORMATION AND EXISTING DRAWINGS. THE SURVEYOR MAKES NO GUARANTEES THAT THE UNDERGROUND UTILITIES SHOWN COMPRISE ALL SUCH UTILITIES IN THE AREA, EITHER IN SERVICE OR ABANDONED. THE SURVEYOR FURTHER DOES NOT WARRANT THAT THE UNDERGROUND UTILITIES SHOWN ARE IN THE EXACT LOCATION INDICATED ALTHOUGH HE DOES CERTIFY THAT THEY ARE LOCATED AS ACCURATELY AS POSSIBLE FROM INFORMATION AVAILABLE. THE SURVEYOR HAS NOT PHYSICALLY LOCATED THE UNDERGROUND UTILITIES OTHER THAN THE STRUCTURE INVENTORY SHOWN HEREON.

2. NO OBSERVED ENCROACHMENTS.

3. GAS, ELECTRIC, WATER, TELEPHONE, AND SEWER UTILITIES ACCESS THE PROPERTY VIA A PUBLIC RIGHT-OF-WAY OR AN EASEMENT LEADING TO A PUBLIC RIGHT-OF-WAY.

4. THERE IS NO OBSERVED EVIDENCE OF CURRENT EARTH MOVING WORK, BUILDING CONSTRUCTION OR BUILDING ADDITIONS.

5. THE SURVEYOR IS UNAWARE OF ANY PROPOSED CHANGES IN STREET RIGHT OF WAY LINES. THERE IS NO OBSERVED EVIDENCE OF RECENT STREET OR SIDEWALK CONSTRUCTION OR REPAIRS.

6. THERE ARE NO DELINEATED WETLANDS ON SITE.

ZONING REGULATIONS

C-2: GENERAL COMMERCIAL DISTRICT

- -MINIMUM LOT AREA – 1 ACRE
- -MINIMUM LOT WIDTH – 150 FEET
- -REQUIRED SETBACK LINE MINIMUM DIMENSIONS –
  FRONT – 50 FEET
  SIDE – 20 FEET
  REAR – 50 FEET
  C/S – 50 FEET
- -MAXIMUM HEIGHT – 30 FEET/2.0 STORIES
- -MAXIMUM LOT COVERAGE – 15% (20%)[12]
- -MAXIMUM FLOOR AREA COVERAGE – 30% (40%)[12]
- -SEE TOWNSHIP OF SCIO ZONING SITE FOR ADDITIONAL NOTE REQUIREMENTS AND DETAILS

NOTE: ALL ZONING INFORMATION IS TAKEN FROM THE TOWNSHIP OF SCIO WEBSITE. ALL ZONING INFORMATION MUST BE VERIFIED FOR COMPLETENESS WITH CURRENT ZONING REGULATIONS.

FLOOD NOTE

SUBJECT PARCEL LIES WITHIN:

OTHER AREA (ZONE X): AREAS DETERMINED TO BE OUTSIDE OF THE 0.2% ANNUAL CHANCE FLOODPLAIN.

AS SHOWN ON FLOOD INSURANCE RATE MAP: MAP NUMBER 26161C0240E, DATED 4/3/2012, PUBLISHED BY THE FEDERAL EMERGENCY MANAGEMENT AGENCY.

LEGEND

- FOUND MONUMENT (AS NOTED)
- FOUND SECTION CORNER (AS NOTED)
- (R&M) RECORD AND MEASURED DIMENSION
- (R) RECORD DIMENSION
- (M) MEASURED DIMENSION
- 0.00 GROUND ELEVATION
- CABLE TV RISER
- SANITARY MANHOLE
- ROUND CATCH BASIN
- SQUARE CATCH BASIN
- STORM DRAIN MANHOLE
- LIGHTPOST/LAMP POST
- SINGLE POST SIGN
- PARCEL BOUNDARY LINE
- ADJOINER PARCEL LINE
- SECTION LINE
- RIGHT-OF-WAY
- CONCRETE CURB
- EDGE OF CONCRETE (CONC.)
- EDGE OF ASPHALT (ASPH.)
- OVERHEAD UTILITY LINE
- G GAS LINE
- S SANITARY LINE
- D STORM LINE
- MINOR CONTOUR LINE
- MAJOR CONTOUR LINE
- ASPHALT
- CONCRETE

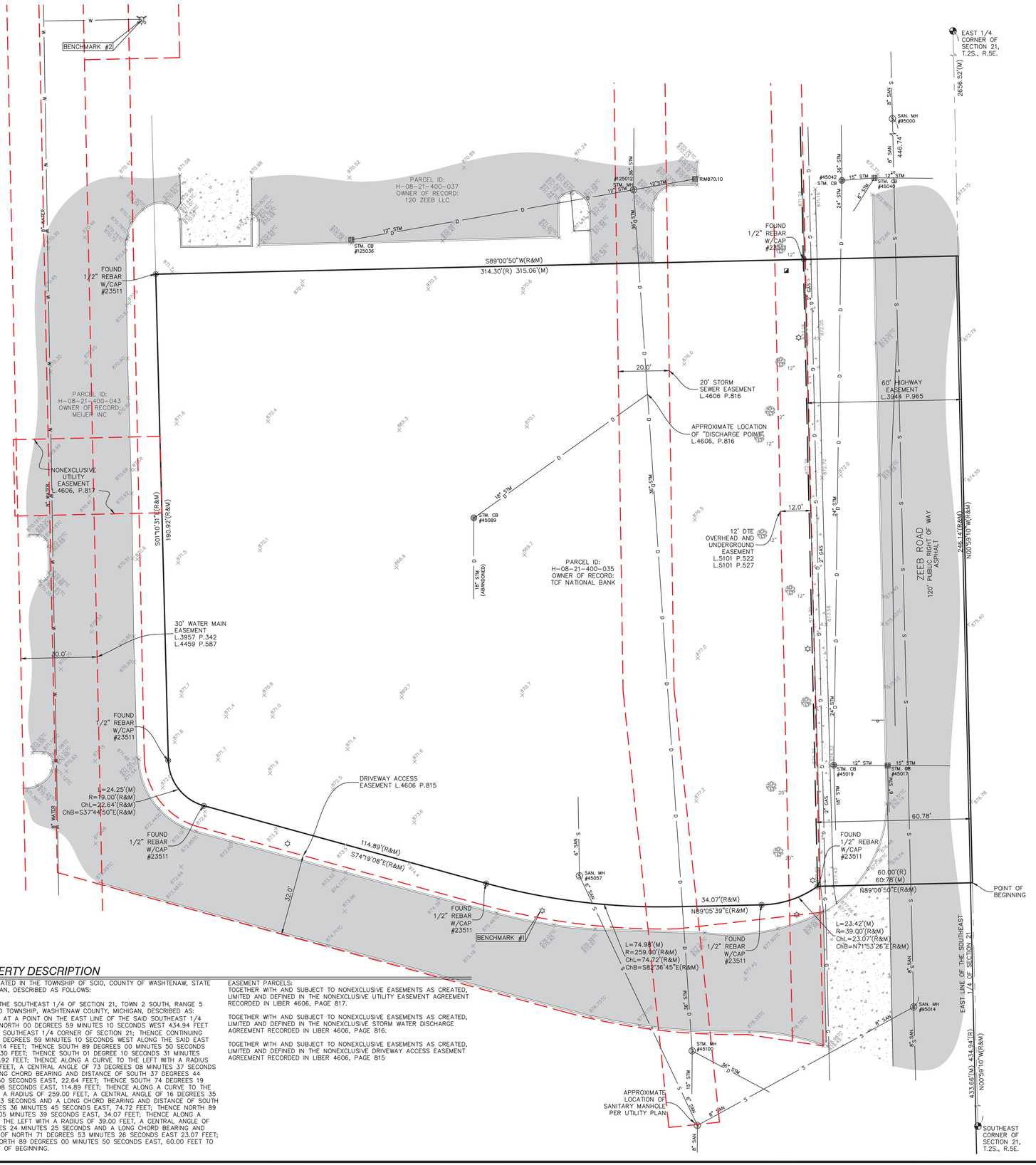

PROPERTY DESCRIPTION

LAND SITUATED IN THE TOWNSHIP OF SCIO, COUNTY OF WASHTENAW, STATE OF MICHIGAN, DESCRIBED AS FOLLOWS:

PART OF THE SOUTHEAST 1/4 OF SECTION 21, TOWN 2 SOUTH, RANGE 5 EAST, SCIO TOWNSHIP, WASHTENAW COUNTY, MICHIGAN, DESCRIBED AS: BEGINNING AT A POINT ON THE EAST LINE OF THE SAID SOUTHEAST 1/4 WHICH IS NORTH 00 DEGREES 59 MINUTES 10 SECONDS WEST 434.94 FEET FROM THE SOUTHEAST 1/4 CORNER OF SECTION 21; THENCE CONTINUING NORTH 00 DEGREES 59 MINUTES 10 SECONDS WEST ALONG THE SAID EAST LINE, 246.14 FEET; THENCE SOUTH 89 DEGREES 00 MINUTES 50 SECONDS WEST 314.30 FEET; THENCE SOUTH 01 DEGREE 10 SECONDS 31 MINUTES EAST, 190.92 FEET; THENCE ALONG A CURVE TO THE LEFT WITH A RADIUS OF 19.00 FEET, A CENTRAL ANGLE OF 73 DEGREES 08 MINUTES 37 SECONDS AND A LONG CHORD BEARING AND DISTANCE OF SOUTH 37 DEGREES 44 MINUTES 50 SECONDS EAST, 22.64 FEET; THENCE SOUTH 74 DEGREES 19 MINUTES 08 SECONDS EAST, 114.89 FEET; THENCE ALONG A CURVE TO THE LEFT WITH A RADIUS OF 259.00 FEET, A CENTRAL ANGLE OF 16 DEGREES 35 MINUTES 13 SECONDS AND A LONG CHORD BEARING AND DISTANCE OF SOUTH 82 DEGREES 36 MINUTES 45 SECONDS EAST, 74.72 FEET; THENCE NORTH 89 DEGREES 05 MINUTES 39 SECONDS EAST, 34.07 FEET; THENCE ALONG A CURVE TO THE LEFT WITH A RADIUS OF 39.00 FEET, A CENTRAL ANGLE OF 34 DEGREES 24 MINUTES 25 SECONDS AND A LONG CHORD BEARING AND DISTANCE OF NORTH 71 DEGREES 53 MINUTES 26 SECONDS EAST 23.07 FEET; THENCE NORTH 89 DEGREES 00 MINUTES 50 SECONDS EAST, 60.00 FEET TO THE POINT OF BEGINNING.

EASEMENT PARCELS:
TOGETHER WITH AND SUBJECT TO NONEXCLUSIVE EASEMENTS AS CREATED, LIMITED AND DEFINED IN THE NONEXCLUSIVE UTILITY EASEMENT AGREEMENT RECORDED IN LIBER 4606, PAGE 817.

TOGETHER WITH AND SUBJECT TO NONEXCLUSIVE EASEMENTS AS CREATED, LIMITED AND DEFINED IN THE NONEXCLUSIVE STORM WATER DISCHARGE AGREEMENT RECORDED IN LIBER 4606, PAGE 816.

TOGETHER WITH AND SUBJECT TO NONEXCLUSIVE EASEMENTS AS CREATED, LIMITED AND DEFINED IN THE NONEXCLUSIVE DRIVEWAY ACCESS EASEMENT AGREEMENT RECORDED IN LIBER 4606, PAGE 815

NORTH

GRAPHIC SCALE

20 0 10 20 40 80
(IN FEET)
1 inch = 20 ft.

TITLE REPORT NOTE

ONLY THOSE EXCEPTIONS CONTAINED WITHIN THE FIRST AMERICAN TITLE INSURANCE COMPANY COMMITMENT No. TC13-92693, DATED JULY 13, 2020, AND RELISTED BELOW WERE CONSIDERED FOR THIS SURVEY. NO OTHER RECORDS RESEARCH WAS PERFORMED BY THE CERTIFYING SURVEYOR.

15. GRANT IN FAVOR OF POSTAL TELEGRAPH CABLE COMPANY AND THE COVENANTS, CONDITIONS AND RESTRICTIONS CONTAINED IN INSTRUMENT(S) RECORDED IN LIBER 318, PAGE 198. (EASEMENT OVER ELECTRIC UTILITY LINES, UNABLE TO DETERMINE SPECIFIC LOCATION)

16. RELEASE OF RIGHT OF WAY IN FAVOR OF COUNTY DRAIN COMMISSIONER OF THE COUNTY OF WASHTENAW AND THE COVENANTS, CONDITIONS AND RESTRICTIONS CONTAINED IN INSTRUMENT(S) RECORDED IN LIBER 557, PAGE 133. (EASEMENT DOES NOT CROSS SUBJECT PARCEL)

17. HIGHWAY EASEMENT IN FAVOR OF BOARD OF COUNTY ROAD COMMISSIONER OF THE COUNTY OF WASHTENAW AND THE COVENANTS, CONDITIONS AND RESTRICTIONS CONTAINED IN INSTRUMENT(S) RECORDED IN LIBER 3944, PAGE 965. (AS SHOWN)

18. NON-EXCLUSIVE SANITARY SEWER EASEMENT IN FAVOR OF SCIO TOWNSHIP AND THE COVENANTS, CONDITIONS AND RESTRICTIONS CONTAINED IN INSTRUMENT(S) RECORDED IN LIBER 3957, PAGE 343. (DOES NOT CROSS SUBJECT PARCEL)

19. TERMS AND CONDITIONS CONTAINED IN NON-EXCLUSIVE STORM DISCHARGE AGREEMENT, AS DISCLOSED BY INSTRUMENT RECORDED IN LIBER 4454, PAGE 645. FIRST AMENDMENT TO NONEXCLUSIVE STORM DRAINAGE AGREEMENT RECORDED IN LIBER 4605, PAGE 108. (NOT PLOTTABLE; SUBJECT PROPERTY IS OUTLOT B AS REFERENCED IN SAID DOCUMENTS; SEE DOCUMENT FOR TERMS AND CONDITIONS)

20. OBLIGATIONS OF THE INSURED PURSUANT TO THE TERMS AND CONDITIONS CONTAINED IN NONEXCLUSIVE UTILITY EASEMENT AGREEMENT AS DISCLOSED BY INSTRUMENT RECORDED IN LIBER 4606, PAGE 817. (AS SHOWN)

21. OBLIGATIONS OF THE INSURED PURSUANT TO THE TERMS AND CONDITIONS CONTAINED IN NONEXCLUSIVE STORM WATER DISCHARGE AGREEMENT AS DISCLOSED BY INSTRUMENT RECORDED IN LIBER 4606, PAGE 816. (AS SHOWN)

22. OBLIGATIONS OF THE INSURED PURSUANT TO THE TERMS AND CONDITIONS CONTAINED IN NONEXCLUSIVE DRIVEWAY ACCESS EASEMENT AGREEMENT AS DISCLOSED BY INSTRUMENT RECORDED IN LIBER 4606, PAGE 815. (AS SHOWN; DOES NOT CROSS SUBJECT PARCEL)

23. OBLIGATIONS OF THE INSURED PURSUANT TO THE TERMS AND CONDITIONS CONTAINED IN DECLARATION OF RESTRICTIONS AS DISCLOSED BY INSTRUMENT RECORDED IN LIBER 4606, PAGE 814. (NOT PLOTTABLE; SEE DOCUMENT FOR TERMS AND CONDITIONS)

24. TERMS, CONDITIONS AND PROVISIONS CONTAINED IN WARRANTY DEED RECORDED IN LIBER 4608, PAGE 369. (NOT PLOTTABLE; SEE DOCUMENT FOR TERMS AND CONDITIONS)

25. DTE OVERHEAD AND UNDERGROUND EASEMENT (RIGHT OF WAY) IN FAVOR OF DTE ELECTRIC COMPANY, AND THE TERMS, CONDITIONS AND PROVISIONS CONTAINED THEREIN, RECORDED IN LIBER 5101, PAGE 522. (AS SHOWN)

26. DTE OVERHEAD AND UNDERGROUND EASEMENT (RIGHT OF WAY) IN FAVOR OF DTE ELECTRIC COMPANY, AND THE TERMS, CONDITIONS AND PROVISIONS CONTAINED THEREIN, RECORDED IN LIBER 5101, PAGE 527. (AS SHOWN)

MANHOLE SCHEDULE

NUM	TYPE	RIM (FT)	SIZE (IN)	DIR	INV ELEV (FT)
45017	STORM CB	875.68	15	E	870.98
		875.68	6	S	871.43
		875.68	12	W	870.88
45019	STORM CB	873.64	24	N	867.64
		873.64	12	E	870.14
		873.64	18	S	869.49
45040	STORM CB	872.31	12	E	867.01
		872.31	6	SW	867.51
		872.31	15	W	867.01
45042	STORM CB	870.47	36	N	863.47
		870.47	15	E	866.27
		870.47	24	S	864.17
45057	SANITARY MH	876.57	6	N	867.87
		876.57	6	S	867.72
45089	STORM CB	868.31	18	NE	863.81
		868.31	18	S	863.31
45100	STORM MH	877.33	36	N	864.78
		877.33	36	SE	868.13
		877.33	15	S	871.53
95000	SANITARY MH	871.11	8	N	856.24
		871.11	8	S	856.27
95014	SANITARY MH	878.24	8	SW	865.04
		878.24	8	N	863.32
		878.24	8	S	863.34
125012	STORM MH	870.71	36	N	861.96
		870.71	36	S	861.86
		870.71	12	SW	863.51
		870.71	12	NE	863.51
125036	STORM CB	870.08	12	NE	863.58

SURVEYOR'S CERTIFICATION

TO STONEFIELD ENGINEERING AND DESIGN; THE HUNTINGTON NATIONAL BANK, ITS SUCCESSORS AND ASSIGNS; TCF NATIONAL BANK, ITS SUCCESSORS AND ASSIGNS; SCIO RETAIL MANAGEMENT II LLC; TITLE CONNECT LLC; AND FIRST AMERICAN TITLE INSURANCE COMPANY:

THIS IS TO CERTIFY THAT THIS MAP OR PLAT AND THE SURVEY ON WHICH IT IS BASED WERE MADE IN ACCORDANCE WITH THE 2016 MINIMUM STANDARD DETAIL REQUIREMENTS FOR ALTA/NSPS LAND TITLE SURVEYS, JOINTLY ESTABLISHED AND ADOPTED BY ALTA AND NSPS, AND INCLUDED ITEMS 2, 3, 4, 5, 6A, 7A, 8, 9, 11, 13, 16, 17, 18, 19, AND 20 OF TABLE A, THEREOF. THE FIELD WORK WAS COMPLETED ON 01/19/2021.

DATE OF PLAT OR MAP: 01/20/2021

ANTHONY T. SYCKO, JR., P.S.
PROFESSIONAL SURVEYOR
MICHIGAN LICENSE NO. 47976
22556 GRATIOT AVE., EASTPOINTE, MI 48021
TSycko@kemtec-survey.com

STATE OF MICHIGAN
ANTHONY T. SYCKO, JR.
PROFESSIONAL SURVEYOR
NO. 47976
LICENSED PROFESSIONAL SURVEYOR

KEM-TEC
PROFESSIONAL ENGINEERING, SURVEYING & ENVIRONMENTAL SERVICES
A MEMBER OF CPC COMPANIES
Ann Arbor (734) 994-0888
Grand Blanc (888) 694-0001
Eastpointe (800) 266-7222
Detroit (313) 758-0677
www.kemtecgroupofcompanies.com

ALTA / NSPS LAND TITLE SURVEY

PREPARED FOR: STONEFIELD ENGINEERING AND DESIGN
140 ZEEB ROAD, SCIO TOWNSHIP, MICHIGAN,
PART OF SECTION 21,
TOWN 2 SOUTH, RANGE 5 EAST

BY	DESCRIPTION	DATE	REVISION
MRJ	REVISED PER NEW UTILITY INFORMATION	01/21/21	1
CMC	REVISED PER REVIEW COMMENTS REVISED TITLE WORK	03/17/21	2
MRJ	EDITED SURVEYOR'S CERTIFICATION	04/05/21	3
CMC	REVISED PER REVIEW COMMENTS	06/29/21	4
JV	REVISED PER REVIEW COMMENTS	09/22/21	5

DRAWN BY:	CMC
CHECKED BY:	ATS
DATE:	JANUARY 20, 2021
PROJECT NO.	20-03641
SCALE:	1" = 20'
	01/20/2021
	01/20/2021

1
1 OF 1 SHEETS

101

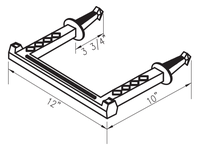

MANHOLE STEP
M.A. PSI-375

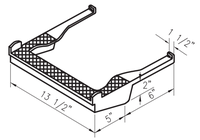

STANDARD MANHOLE STEP
E.J.I.W. 8502

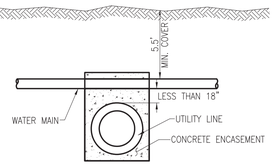

UTILITY CROSSING WITH LESS THAN 18" CLEARANCE

NOTE:
WHERE CONCRETE ENCASEMENT IS SPECIFIED FOR NEW UTILITY A 6" MINIMUM LAYER OF MECHANICALLY COMPACTED SAND SHALL BE MAINTAINED BETWEEN EX. UTILITY & TOP OF CONCRETE ENCASEMENT



NOTE:
COMPACTED SAND SHALL EXTEND FOR 9" EACH SIDE OF EXISTING PIPE, AT 6" ABOVE EXISTING PIPE & SHALL SLOPE OUT AT A 1:1 (45°) SLOPE TO THE BOTTOM OF THE TRENCH

STANDARD PIPE SUPPORT

8" BRICK BULKHEAD SHALL BE PLACED AT EACH END OF CASING PIPE AFTER PIPE INSTALLATION. SKIDS SHALL TERMINATE 8" FROM END OF CASING TO ALLOW BULKHEADING OF ENTIRE PIPE CIRCUMFERENCE.

PIPE SHALL BE STRAPPED TO PRE-MANUFACTURED SKIDS (WOOD SKIDS WILL NOT BE ACCEPTED). SKIDS SHALL BE 85% OF PIPE LENGTH.

THE THREE SKIDS SHALL BE PLACED TO PREVENT THE CARRIER PIPE FROM ROLLING OVER OR SHIFTING.

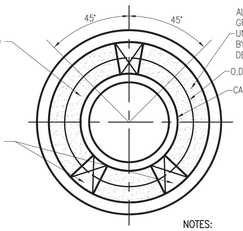

DIA. OF CARRIER PIPE	MIN. (I.D.) "A"	ROAD CROSSING MIN."B"	RAILROAD CROSSING MIN."B"
6"	16"	.312	.312
8"	16"	.312	.375
12"	20"	.312	.438
16"	24"	.375	.500
20"	30"	.375	.500
24"	36"	.375	.500

A=INSIDE DIAMETER
B=WALL THICKNESS

4" MINIMUM CLEARANCE BETWEEN MAX. O.D. AT A JOINT OF THE PIPE AND THE I.D. OF THE CASING PIPE FOR THE TOP 90° OF THE CASING

NOTES:
DETAILS ARE TYPICAL FOR WATER PIPE CONSTRUCTED IN CASING PIPE

THE CONTRACTOR SHALL SUBMIT IN WRITING THE DETAILS OF THE APPROPRIATE PIPE CASING INSTALLATION FOR THE REVIEW AND APPROVAL BY THE ENGINEER BEFORE INSTALLATION OF ANY CASING STARTS

CASING SHALL BE SPIRAL WELDED STEEL PIPE A.S.T.M. A-252, GR. 2.

ALL CASING PIPE JOINTS SHALL BE FULLY WELDED

PIPE BARREL SUPPORT FOR WATER MAIN CONSTRUCTED IN CASING PIPE

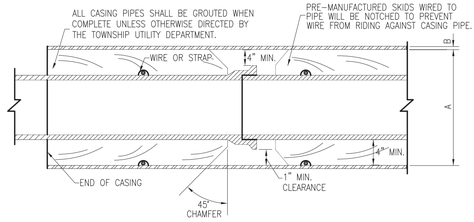

STANDARD CASING SECTION

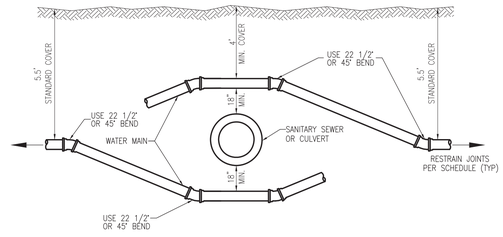

SEWER OR CULVERT CROSSING

NOTE:
BENDS CAN BE ELIMINATED FOR MINOR VERTICAL DEFLECTIONS IN DUCTILE IRON PIPE (1° OR LESS). IN THIS CASE, THE PIPE MAY BE DEFLECTED UP TO 4° PER JOINT.

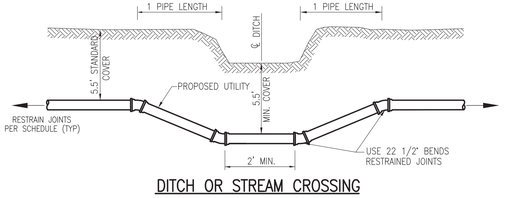

DITCH OR STREAM CROSSING

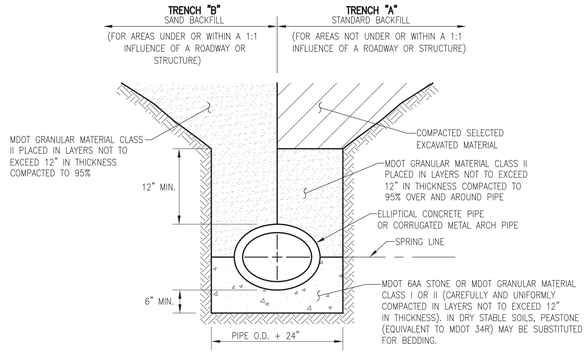

ELLIPTICAL CONCRETE PIPE OR CORRUGATED METAL ARCH PIPE

NOTES:
THE MAXIMUM PARTICLE SIZE ALLOWED IN THE EMBEDMENT ZONE IS 1.5 INCHES.

THERE SHALL BE NO DEBRIS, FROZEN MATERIAL, OR ORGANIC MATERIAL WITHIN 2 FEET OF THE TOP OF THE PIPE.

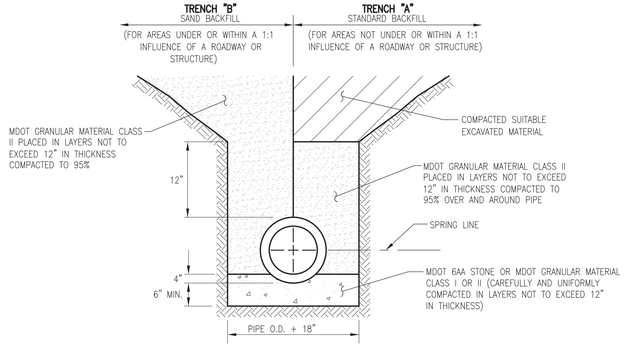

24" DIAMETER AND SMALLER PIPE (CONCRETE AND METAL PIPE)

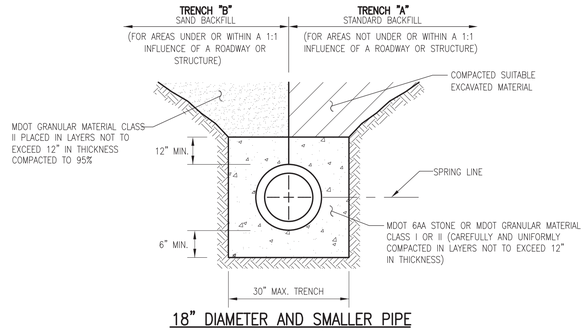

18" DIAMETER AND SMALLER PIPE (PVC PIPE)

NOTES:
THE MAXIMUM PARTICLE SIZE ALLOWED IN THE EMBEDMENT ZONE IS 1.5 INCHES.

THERE SHALL BE NO DEBRIS, FROZEN MATERIAL, OR ORGANIC MATERIAL WITHIN 2 FEET OF THE TOP OF THE PIPE.

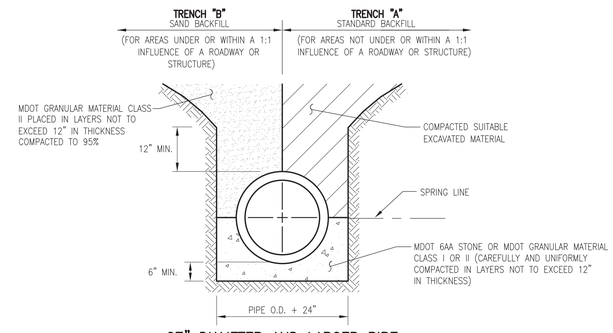

27" DIAMETER AND LARGER PIPE (CONCRETE AND METAL PIPE)

REVISIONS:

COPYRIGHT © 2006 O.H. & M. INC. ALL DRAWINGS AND WRITTEN MATERIALS APPEARING HEREIN CONSTITUTE THE ORIGINAL AND UNPUBLISHED WORK OF O.H. & M. INC. AND THE SAME MAY NOT BE DUPLICATED, DISTRIBUTED, OR DISCLOSED WITHOUT PRIOR WRITTEN CONSENT OF O.H. & M. INC.

DATE	BID DATE
CADD	ENGINEER
DSN ENGINEER	PROJECT MGR
APPROVED	SCALE V: H: NTS

SCIO TOWNSHIP
GENERAL DETAILS

CLIENT:

ORCHARD, HILTZ & McCLIMENT, INC.
CONSULTING ENGINEERS
34000 Plymouth Road
Livonia, MI 48150
(734) 522-6711
(734) 522-6427 FAX

DWG: GENERAL DETAILS.DWG
LAYOUT: LAYOUT1

SHEET –

JOB NO.

DRAWING NAME: GENERAL DETAILS.DWG
Drawing Path: S:\OHM\CADD\ACAD\DETAILS\COMMUNITIES\SCIO\STD_GEN\GENERAL DETAILS.DWG
CLIENT:
JOB #

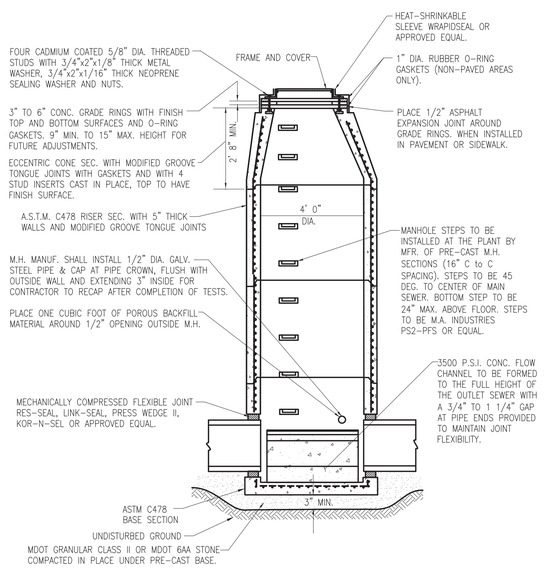

STANDARD MANHOLE

8" DIAMETER THROUGH 21" DIAMETER PIPE

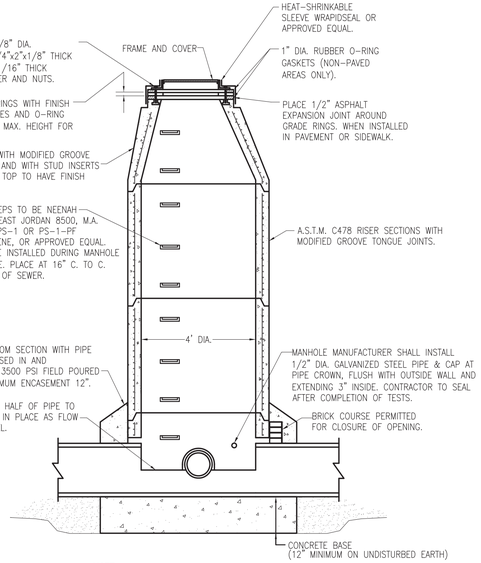

NOTE:
FOR LOCAL SANITARY SEWER EXTENSIONS CONNECTING DIRECTLY OR INDIRECTLY TO SCIO TOWNSHIP PUBLIC WORKS

MANHOLE CONSTRUCTED OVER EXISTING SEWER

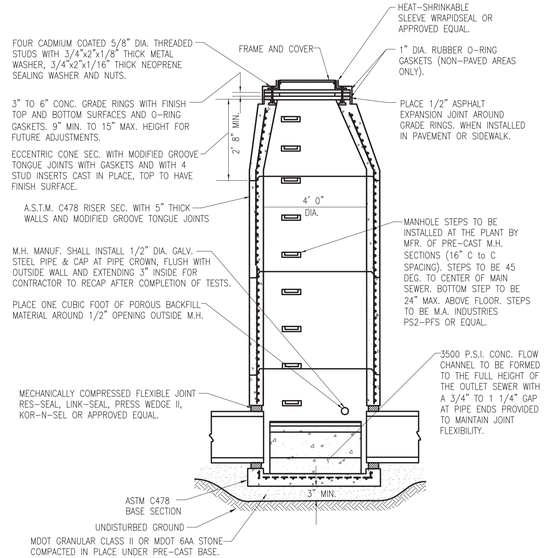

STANDARD MONITORING MANHOLE

6" DIAMETER PIPE OR SMALLER

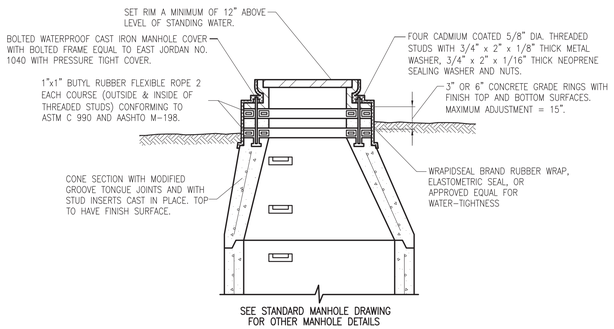

SEE STANDARD MANHOLE DRAWING FOR OTHER MANHOLE DETAILS

MANHOLE TOP WITHIN FLOOD PRONE AREA

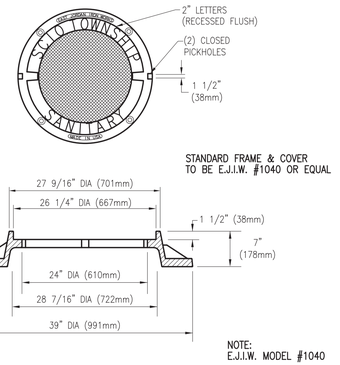

NOTE:
E.J.I.W. MODEL #1040

MANHOLE FRAME AND COVER

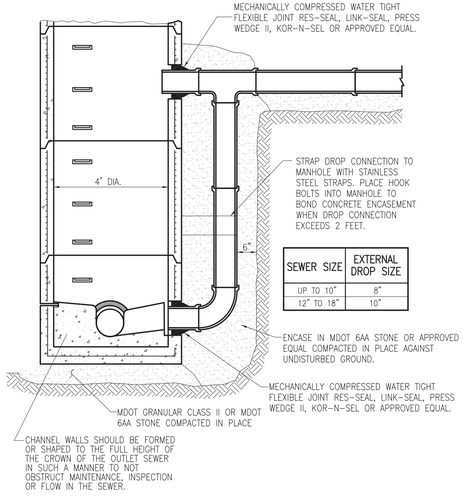

SEWER SIZE	EXTERNAL DROP SIZE
UP TO 10"	8"
12" TO 18"	10"

EXTERNAL DROP CONNECTION

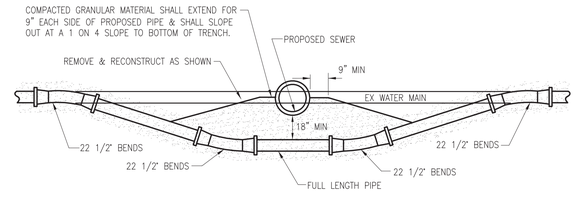

UTILITY RELOCATION

COPYRIGHT © 2008 O.H. & M. INC. ALL DRAWINGS AND WRITTEN MATERIALS APPEARING HEREIN CONSTITUTE THE ORIGINAL AND UNPUBLISHED WORK OF O.H. & M. INC. AND THE SAME MAY NOT BE DUPLICATED, DISTRIBUTED, OR DISCLOSED WITHOUT PRIOR WRITTEN CONSENT OF O.H. & M. INC.

REVISIONS:

DATE | BID DATE
CADD | ENGINEER
DSN ENGINEER | PROJECT MGR
APPROVED | SCALE
V:
H: NTS

SCIO TOWNSHIP
SANITARY DETAILS

CLIENT:

ORCHARD, HILTZ & McCLIMENT, INC.
OHM CONSULTING ENGINEERS
34000 Plymouth Road
Livonia, MI 48150
(734) 522-6711
(734) 522-6427 FAX

DWG: SAN DETAILS.DWG
LAYOUT: LAYOUT1
SHEET –
JOB NO.

Drawing Path: S:\OHM\CADD\ACAD\DETAILS\COMMUNITIES\SCIO\STD_SAN\SAN DETAILS.DWG
CLIENT:
DRAWING NAME: SAN DETAILS.DWG
JOB #

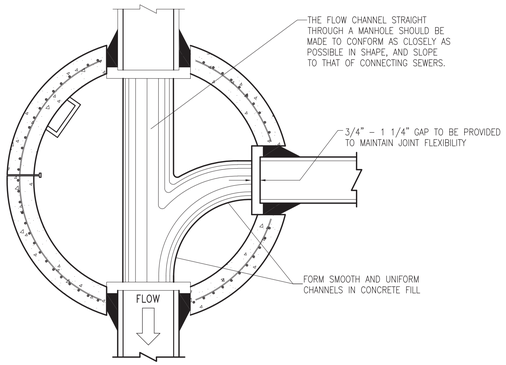

FLOW LINE

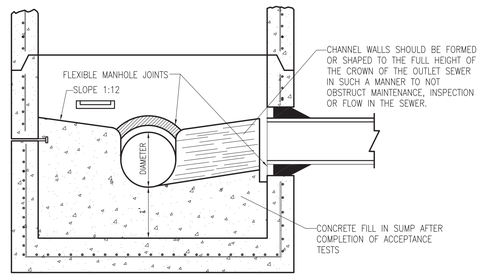

MANHOLE FLOW CHANNEL

NOTE:
PROVIDE EXPANSION JOINT
AROUND PERIMETER

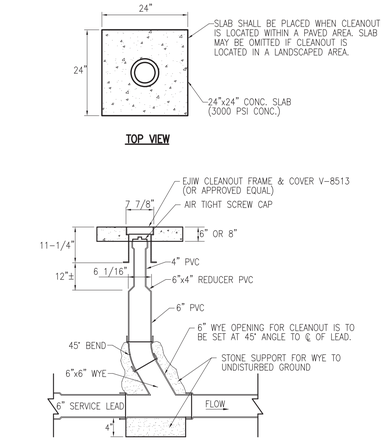

SANITARY SEWER CLEANOUT

NOTE:
IN THE EVENT THAT OTHER UTILITIES ARE TO BE INSTALLED IN THE EASEMENT ADJACENT TO THE THE PROPERTY LINE, THE SEWER LEAD SHALL BE EXTENDED A SUFFICIENT DISTANCE BEYOND THE OTHER UTILITIES.

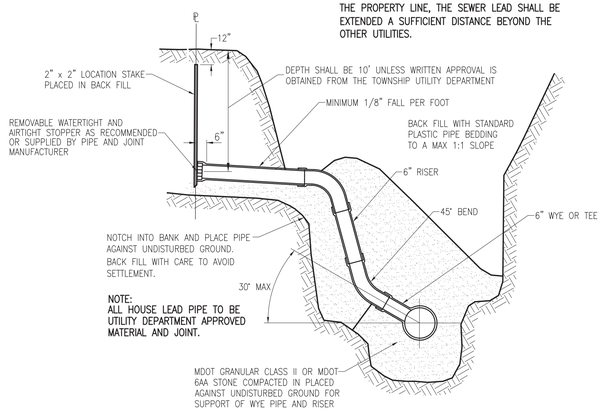

HOUSE SERVICE LEAD CONNECTION

NOTE:
CONTRACTOR SHALL EXCAVATE ON BOTH SIDES OF SANITARY SEWER TO EQUALIZE PRESSURE IF SO DIRECTED BY THE ENGINEER.

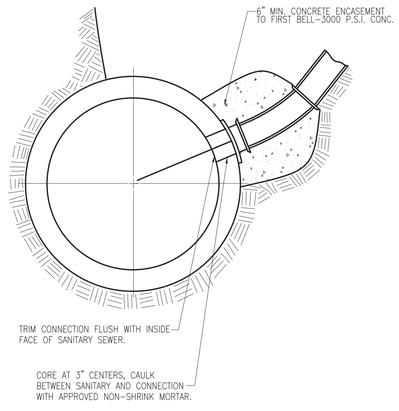

SADDLE CONNECTION

SCIO TOWNSHIP
STANDARD SANITARY SEWER CONSTRUCTION NOTES

1. ALL CONSTRUCTION PROCEDURES AND MATERIALS USED ON ALL SANITARY SEWER PROJECTS SHALL CONFORM TO THE CURRENT SCIO TOWNSHIP ENGINEERING STANDARDS AND DESIGN SPECIFICATIONS MANUAL.
2. ALL MANHOLE RIMS SHALL BE SET TO GRADE AS FURNISHED BY THE ENGINEER.
3. RISERS ON SANITARY SEWERS LEADS SHALL BE INSTALLED WHERE SEWER IS MORE THAN 10 FEET DEEP IN ORDER TO ACHIEVE A LEAD DEPTH OF 10 FEET.
4. PLACE ONE 6 INCH WYE FOR EACH LOT ON SANITARY SEWERS UNLESS OTHERWISE SPECIFIED.
5. ALL MANHOLES SHALL USE ECCENTRIC CONES PLACED TOWARD THE PROPERTY LINE UNLESS OTHERWISE SPECIFIED.
6. INFILTRATION FOR ANY SECTION OF SEWERS BETWEEN MANHOLES SHALL NOT EXCEED 100 GALLONS PER INCH IN DIAMETER PER MILE OF SEWER PER 24 HOURS.
7. NO FOOTING OR ROOF DRAINS SHALL BE CONNECTED TO THE PROPOSED SEWER.
8. NO CONNECTION RECEIVING STORM WATER, SURFACE WATER, OR GROUND WATER SHALL BE MADE TO SANITARY SEWERS.
9. ALL SEWERS SHALL BE SUBJECT TO INFILTRATION, EXFILTRATION, OR LOW-PRESSURE AIR TESTS, OR A COMBINATION THEREOF, PRIOR TO FINAL ACCEPTANCE BY THE TOWNSHIP. ALL SEWERS OVER 24 INCH DIAMETER SHALL BE SUBJECTED TO INFILTRATION TESTS. ALL SEWERS OF 24 INCH DIAMETER OR SMALLER, WHERE THE GROUND WATER LEVEL ABOVE THE TOP OF THE SEWER IS OVER 2 FEET, SHALL BE SUBJECTED TO INFILTRATION TESTS. ALL SEWERS OF 24 INCH DIAMETER OR LESS, WHERE THE GROUND WATER LEVEL ABOVE THE TOP OF THE SEWER IS 2 FEET OR LESS, SHALL BE SUBJECTED TO A LOW-PRESSURE AIR TEST, OR EXFILTRATION TEST WHERE APPROVED BY THE ENGINEER.
10. ALL PVC AND ABS PLASTIC SEWERS SHALL BE SUBJECTED TO DEFLECTION TESTING BY MEANS OF A NINE-POINT DEFLECTION TEST MANDREL, PULLED MANUALLY (BY HAND). THE MAXIMUM ALLOWED DEFLECTION SHALL BE 5%.
11. ALL SEWERS 36 INCH DIAMETER AND SMALLER SHALL BE VIDEOTAPED, WITH TEST RESULTS APPROVED BY THE TOWNSHIP UTILITY DEPARTMENT PRIOR TO PLACING THE SEWER IN SERVICE. WATER SHALL BE PLACED IN THE SEWER AT ALL UPSTREAM MANHOLES PRIOR TO VIDEOTAPING AS DIRECTED BY THE ENGINEER.
12. ALL SEWER SYSTEM CONSTRUCTION SHALL CONFORM TO THE CURRENT STANDARDS AND GENERAL SPECIFICATIONS OF SCIO TOWNSHIP AND ANY OTHER AGENCY HAVING JURISDICTION OVER THE CONSTRUCTION AREA.
13. ALL STUBS SHALL HAVE A WATER AND AIR TIGHT BULKHEAD.
14. NO SEWER SHALL BE CONSTRUCTED LESS THAN 8 INCH IN DIAMETER.
15. THE MINIMUM DEPTH TO TOP OF PIPE SHALL BE 5 FEET.
16. PIPE BEDDING MATERIAL SHALL BE COMPACTED TO 95% OF MAXIMUM DRY DENSITY.
17. THE MAXIMUM DEPTH TO INVERT OF ANY SANITARY SEWER SHALL NOT EXCEED THE DEPTH RECOMMENDED BY THE PIPE MANUFACTURER FOR EACH SIZE AND CLASS OF PIPE.

SANITARY SEWER MATERIALS

18. PLASTIC SANITARY SEWERS SHALL BE EITHER PVC SDR 26 (MINIMUM) (ASTM D-3034) OR PVC/ABS TRUSS PIPE AS MANUFACTURED BY CONTECH CONSTRUCTION PRODUCTS OR EQUAL (ASTM D-2680). ALL WYES, RISERS AND BUILDING SERVICE LEADS SHALL BE 6" PVC SDR 26 (ASTM D-3034). REINFORCED CONCRETE SEWER PIPE SHALL CONFORM TO ASTM C-76. DUCTILE IRON SANITARY SEWER SHALL MEET THE REQUIREMENTS OF ANSI/AWWA C151/A21.51 CLASS 52. WHERE THE SCIO TOWNSHIP SPECIFICATIONS DIFFER WITH ANSI/AWWA C151/A21.51, THE SPECIFICATIONS WILL PREVAIL.
19. FORCE MAIN PIPE SHALL BE DUCTILE IRON PIPE CONFORMING TO THE SCIO TOWNSHIP WATER MAIN STANDARDS OR PVC SDR 11 (MINIMUM) PRESSURE PIPE CONFORMING TO ASTM D-3034
20. JOINTS FOR PVC PIPE SHALL BE PUSH-ON TYPE (ASTM D-3212) OR SOLVENT-CEMENTED JOINTS (ASTM D-2680) IN SPECIAL APPLICATIONS AS SPECIFIED BY THE TOWNSHIP ENGINEER. JOINTS FOR ABS TRUSS PIPE SHALL CONSIST OF ABS COUPLINGS CHEMICALLY CEMENTED TO THE ENDS OF THE PIPE BEING CONNECTED. SOLVENTS AND METHODS SHALL CONFORM TO ASTM D-2680. MODIFIED GROOVED TONGUE (MGT) JOINTS FOR CONCRETE PIPE SHALL HAVE A RUBBER GASKET SNAPPED INTO A GROOVE CAST IN TO THE TONGUE. RUBBER GASKET JOINTS FOR CONCRETE PIPE SHALL BE IN ACCORDANCE WITH ASTM 443 SPECIFICATION. THE JOINTS SHALL BE LUBRICATED AND COUPLED IN ACCORDANCE WITH THE PIPE MANUFACTURER'S PRINTED INSTRUCTIONS.
21. FOR DUCTILE IRON PIPE, THE BELL OF EACH PIPE SHALL PROVIDE FOR THE SEATING OF A RUBBER GASKET SUITABLE FOR USE WITH SANITARY SEWAGE. SUFFICIENT NON-TOXIC LUBRICANT SHALL BE APPLIED AND SHALL HAVE NO DELETERIOUS EFFECT ON THE RUBBER GASKET.
22. MANHOLES SHALL BE PRE-CAST AND SHALL CONFORM TO ASTM C478, LATEST REVISION. FRAME AND CHIMNEY SECTIONS OF ALL SANITARY MANHOLES SHALL BE WRAPPED WITH WRAPIDSEAL HEAT-SHRINKABLE WRAP PRODUCED BY CANUSA-CPS OR APPROVED EQUAL.
23. FRAMES AND COVERS SHALL BE WATERPROOF, CAST IRON COVERS EQUAL TO EAST JORDAN IRON WORKS NO. 1040AGS HEAVY DUTY OR APPROVED EQUAL. BOLT DOWN COVERS (ONLY AS APPROVED BY TOWNSHIP UTILITIES DEPARTMENT) SHALL BE BOLTED DOWN WITH FOUR (4) CADMIUM COATED 5/8 INCH DIAMETER THREADED STUDS WITH 3/4" X 2" X 1/8" THICK, METAL WASHERS AND 3/4" X 2" X 1/16" THICK NEOPRENE SEALING WASHERS AND NUTS.

COPYRIGHT © 2008 O.H. & M. INC. ALL DRAWINGS AND WRITTEN MATERIALS APPEARING HEREIN CONSTITUTE THE ORIGINAL AND UNPUBLISHED WORK OF O.H. & M. INC. AND THE SAME MAY NOT BE DUPLICATED, DISTRIBUTED, OR DISCLOSED WITHOUT PRIOR WRITTEN CONSENT OF O.H. & M. INC.

REVISIONS:

DATE	BID DATE
CADD	ENGINEER
DSN ENGINEER	PROJECT MGR
APPROVED	SCALE V: H: NTS

SCIO TOWNSHIP
SANITARY DETAILS

CLIENT:

ORCHARD, HILTZ & MCCLIMENT, INC.
OHM CONSULTING ENGINEERS
34000 Plymouth Road
Livonia, MI 48150
(734) 522-6711
(734) 522-6427 FAX

DWG: SAN DETAILS.DWG
LAYOUT: LAYOUT1

SHEET –

JOB NO.

JOB #:

DRAWING NAME: SAN DETAILS.DWG

CLIENT:

Drawing Path: S:\OHM (CADD)\ACAD\DETAILS\COMMUNITIES\SCIO\STD_SAN\SAN DETAILS.DWG

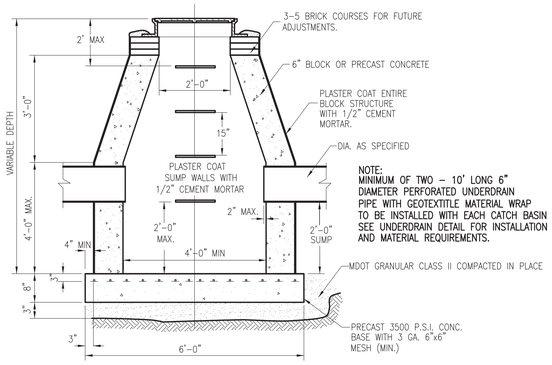

NOTE:
MINIMUM OF TWO – 10' LONG 6" DIAMETER PERFORATED UNDERDRAIN PIPE WITH GEOTEXTITLE MATERIAL WRAP TO BE INSTALLED WITH EACH CATCH BASIN SEE UNDERDRAIN DETAIL FOR INSTALLATION AND MATERIAL REQUIREMENTS.

SHALLOW CATCH BASIN

M.H. STEP SPACING:
CONC. BLK. M.H. ..... 18" CENTERS
PRECAST M.H. ..... 16" CENTERS
TOP STEP TO BE 21" BELOW TOP OF FRAME

MIN. CONE HEIGHTS:
BLOCK CONCENTRIC 3'-0"
PRECAST ECCENTRIC 2'-8" OR 3'-4"

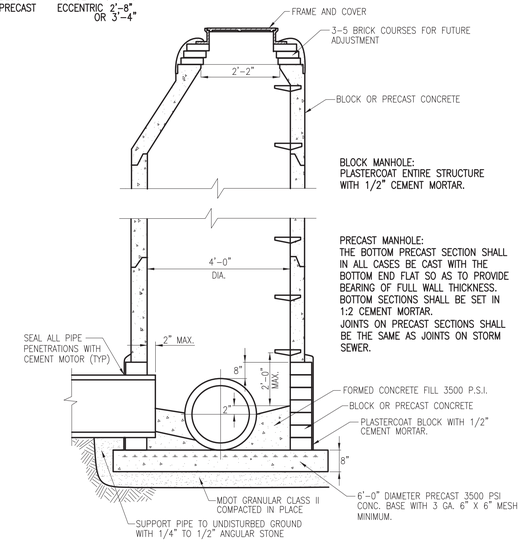

BLOCK MANHOLE:
PLASTERCOAT ENTIRE STRUCTURE WITH 1/2" CEMENT MORTAR.

PRECAST MANHOLE:
THE BOTTOM PRECAST SECTION SHALL IN ALL CASES BE CAST WITH THE BOTTOM END FLAT SO AS TO PROVIDE BEARING OF FULL WALL THICKNESS. BOTTOM SECTIONS SHALL BE SET IN 1:2 CEMENT MORTAR.
JOINTS ON PRECAST SECTIONS SHALL BE THE SAME AS JOINTS ON STORM SEWER.

STANDARD STORM MANHOLE

CONC. BLOCK MANHOLE:
APPROVED CONC. BLOCK
USE 6" OR 8" THICK BLOCK TO 16' DEPTH
USE 12" THICK BLOCK TO 24' DEPTH
16" BLOCK WALL BELOW 24' DEPTH

PRECAST MANHOLE:
C-478 UP TO 32' DEPTH
WITH 5" THICK WALL.

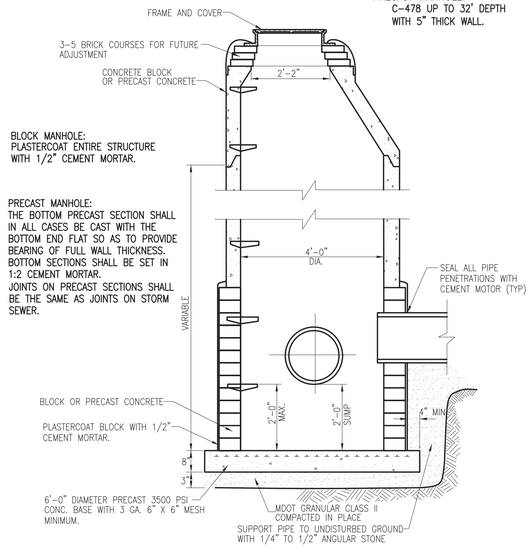

STANDARD STORM CATCH BASIN

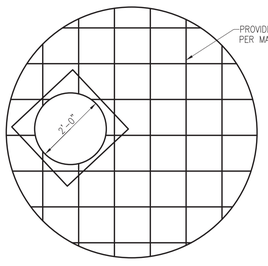

TOP SLAB

OUTLET "D"	M.H. I.D.	TOP SLAB "T"	WALLS "W"	REINF. STEEL *
** 24" OR LESS	4'-0"	9"	8"	#6 @ 9" EA. WAY
30"	4'-0"	9"	8"	#6 @ 9" EA. WAY
36"	4'-0"	9"	12"	#6 @ 9" EA. WAY
42"	5'-0"	10"	12"	#6 @ 9" EA. WAY
48" 54"	6'-0"	11"	12"	#7 @ 9" EA. WAY

* TOP SLAB
** 2" SUMP REQ. FOR MANHOLE WITH OUTLETS OF 18" AND UNDER.

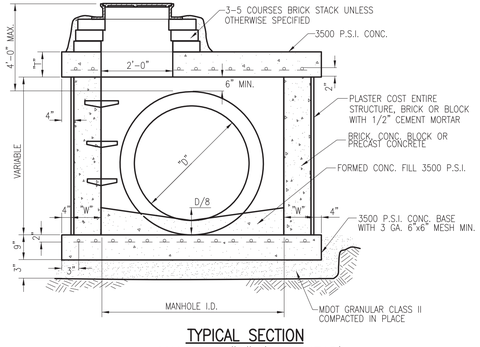

TYPICAL SECTION MANHOLE "D" (LOW HEAD)

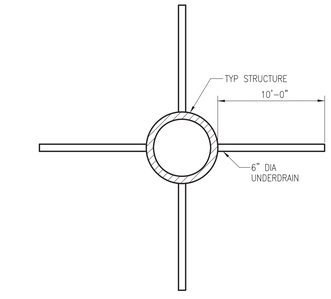

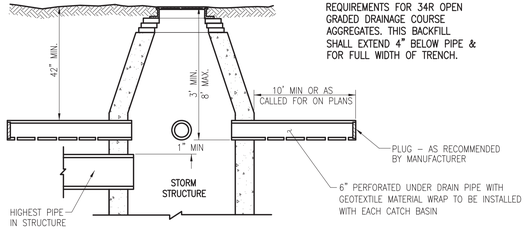

NOTE:
BACKFILL SHALL MEET M.D.O.T. REQUIREMENTS FOR 34R OPEN GRADED DRAINAGE COURSE AGGREGATES. THIS BACKFILL SHALL EXTEND 4" BELOW PIPE & FOR FULL WIDTH OF TRENCH.

MANHOLE WITH UNDERDRAIN

NOTE:
OIL/WATER SEPARATOR MANHOLE SHALL BE 5'DIAMETER STRUCTURE WITH 4' SUMP AND 6" OF EXTENSION OF SUBMERGED TEE. PROVIDE MANHOLE TOP.

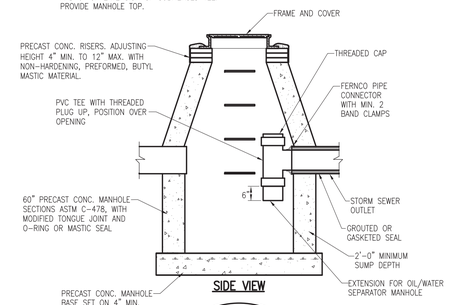

SIDE VIEW

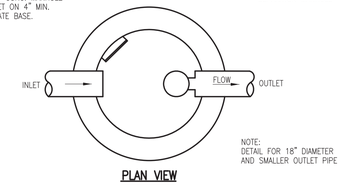

NOTE:
DETAIL FOR 18" DIAMETER AND SMALLER OUTLET PIPE

PLAN VIEW

ENVIRONMENTAL CATCH BASIN/MANHOLE

COPYRIGHT © 2006 O.H. & M. INC. ALL DRAWINGS AND WRITTEN MATERIALS APPEARING HEREIN CONSTITUTE THE ORIGINAL AND UNPUBLISHED WORK OF O.H. & M. INC. AND THE SAME MAY NOT BE DUPLICATED, DISTRIBUTED, OR DISCLOSED WITHOUT PRIOR WRITTEN CONSENT OF O.H. & M. INC.

REVISIONS:

DATE | BID DATE
CADD | ENGINEER
DSN ENGINEER | PROJECT MGR
APPROVED | SCALE V: H: NTS

SCIO TOWNSHIP
STORM SEWER DETAILS

CLIENT:

ORCHARD, HILTZ & McCLIMENT, INC.
34000 Plymouth Road
Livonia, MI 48150
(734) 522-6711
(734) 522-6427 FAX

DWG: STM DETAILS.DWG
LAYOUT: LAYOUT1
SHEET –
JOB NO.

Drawing Path: S:\OHM\CADD\ACAD\DETAILS\COMMUNITIES\SCIO\STD_STM\STM DETAILS.DWG
CLIENT:
DRAWING NAME: STM DETAILS.DWG
JOB #

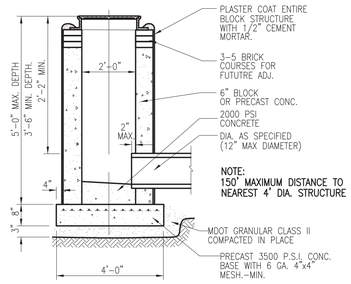

STANDARD INLET

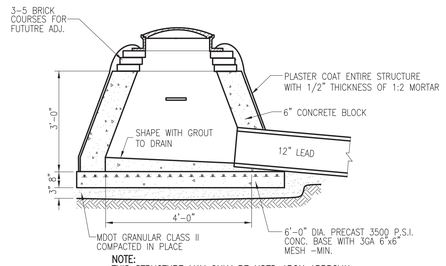

NOTE:
THIS STRUCTURE MAY ONLY BE USED APON APPROVAL FROM SCIO TOWNSHIP OR TOWNSHIP ENGINEER.

YARD BASIN

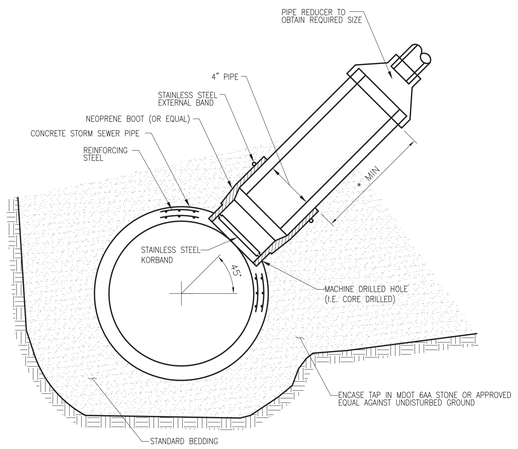

NOTE:
CONNECTION DETAIL FOR DIRECTLY TAPING A SUMP INTO THE PIPE WALL OF EXISTING OR PROPOSED CONCRETE SEWER

SUMP TAP FOR
FOR CONCRETE PIPE

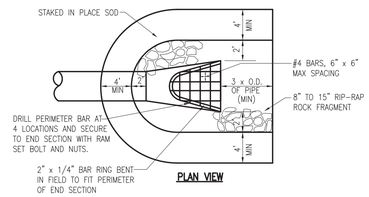

PLAN VIEW

NOTE:
MINIMUM REQUIREMENTS FOR RIP-RAP MATERIAL SHALL MEET MDOT SPECIFICATION 8.19.02

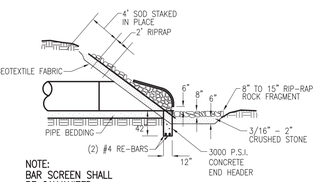

NOTE:
BAR SCREEN SHALL BE GALVANIZED

PROFILE VIEW

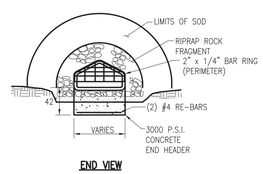

END VIEW

RIP RAP SCHEDULE

PIPE DIA	SY
12"	4
15"	4
18"	4
21"	5
24"	6
27"	7
30"	8
36"	10
42"	12
48"	14

GRATE & END SECTION

SCIO TOWNSHIP
STANDARD STORM SEWER CONSTRUCTION NOTES

1. ALL CONSTRUCTION PROCEDURES AND MATERIALS USED ON ALL STORM SEWER PROJECTS SHALL CONFORM TO THE CURRENT SCIO TOWNSHIP ENGINEERING STANDARDS AND DESIGN SPECIFICATIONS MANUAL.
2. ALL MANHOLE RIMS SHALL BE SET TO GRADE AS FURNISHED BY THE ENGINEER.
3. THE MINIMUM ALLOWABLE COVERAGE OVER PIPE IS 3 FEET. LOW-HEAD STRUCTURES SHALL BE INSTALLED IN LOCATIONS WHERE THE COVER OVER TOP OF PIPE IS 4 FEET OR LESS.
4. ALL STORM SEWER SHALL BE INSTALLED TO THE GRADE SPECIFIED ON THE PLANS.
5. SUMP PUMP LEADS SHALL BE CONNECTED INTO AN ENCLOSED SYSTEM AND SHALL BE TAPPED DIRECTLY INTO THE STORM SEWER OR A STORM SEWER STRUCTURE. AT A MINIMUM, A 4 INCH CONNECTION WITH A BOOT SHALL BE USED AND WILL BE ALLOWED TO DISCHARGE UNRESTRICTED.

STORM SEWER MATERIALS

6. STORM SEWER PIPE SHALL BE REINFORCED CONCRETE PIPE CONFORMING TO THE CURRENT ASTM "SPECIFICATIONS FOR REINFORCED CONCRETE CULVERT, STORM DRAIN AND SEWER PIPE, ASTM C-76 FOR CIRCULAR PIPE OR ASTM C-507 FOR ELLIPTICAL PIPE, LATEST REVISION. IF OTHER MATERIALS ARE PROPOSED FOR USE, THE DESIGN ENGINEER WILL FURNISH LOAD CARRYING DESIGN ANALYSIS FOR THE PIPE FOR THE PROPOSED DEPTH AND CONDITIONS.
7. CORRUGATED METAL PIPE CULVERTS SHALL CONFORM TO AASHTO M36 OR ASTM A760, LATEST REVISION. PIPE SHALL BE GALVANIZED UNLESS OTHERWISE NOTED ON THE DRAWINGS.
8. MODIFIED GROOVE TONGUE PIPE JOINTS SHALL HAVE A RUBBER GASKET SNAPPED INTO A GROOVE CAST INTO THE TONGUE. RUBBER GASKET JOINTS SHALL BE LUBRICATED AND COUPLED IN ACCORDANCE WITH PIPE MANUFACTURER'S PRINTED INSTRUCTIONS. CORRUGATED METAL PIPE JOINTS SHALL BE CORRUGATED COUPLING TYPE WITH ALL MATERIALS GALVANIZED IN ACCORDANCE WITH AASHTO M36, LATEST REVISION.
9. MANHOLES AND CATCH BASINS SHALL BE CONSTRUCTED IN ACCORDANCE WITH THE ACCOMPANYING SCIO TOWNSHIP STANDARD DETAILS. PRECAST REINFORCED CONCRETE MANHOLE/CATCH BASIN SECTIONS SHALL CONFORM TO THE REQUIREMENTS OF ASTM C-478, LATEST REVISION. BRICK FOR CASTING ADJUSTMENTS OR CONCRETE BLOCK FOR MANHOLE, INLET, OR CATCH BASIN CONSTRUCTION SHALL CONFORM TO THE REQUIREMENTS OF THE MDOT STANDARD SPECIFICATIONS FOR CONSTRUCTION, LATEST REVISION. A MINIMUM OF THREE TO A MAXIMUM OF SIX ADJUSTMENT COURSES SHALL BE PLACED ABOVE THE TOP OF THE CONE SECTION ON ALL PRECAST OR BLOCK MANHOLES/CATCH BASINS.
10. MANHOLE COVERS AND FRAMES SHALL BE EAST JORDAN IRON WORKS #1040 WITH TYPE "B" COVER OR APPROVED EQUAL. PAVEMENT CATCH BASIN AND INLET FRAMES AND GRATES SHALL BE IN ACCORDANCE WITH THE REQUIREMENTS OF THE WASHTENAW COUNTY ROAD COMMISSION. LAWN CATCH BASIN AND INLET FRAMES AND GRATES SHALL BE EAST JORDAN IRON WORKS #1000 WITH TYPE "N" GRATE OR APPROVED EQUAL. DITCH CATCH BASIN FRAMES AND GRATES SHALL BE EAST JORDAN IRON WORKS #1000 WITH TYPE 01 BEEHIVE GRATE OR APPROVED EQUAL.

REVISIONS:

COPYRIGHT © 2006 O.H. & M. INC. ALL DRAWINGS AND WRITTEN MATERIALS APPEARING HEREIN CONSTITUTE THE ORIGINAL AND UNPUBLISHED WORK OF O.H. & M. INC. AND THE SAME MAY NOT BE DUPLICATED, DISTRIBUTED, OR DISCLOSED WITHOUT PRIOR WRITTEN CONSENT OF O.H. & M. INC.

DATE | BID DATE
CADD | ENGINEER
DSN ENGINEER | PROJECT MGR
APPROVED | SCALE
V:
H: NTS

SCIO TOWNSHIP
STORM SEWER DETAILS

CLIENT:

ORCHARD, HILTZ & MCCLIMENT, INC.
OHM CONSULTING ENGINEERS
34000 Plymouth Road
Livonia, MI 48150
(734) 522-6711
(734) 522-6427 FAX

DWG: STM DETAILS.DWG
LAYOUT: LAYOUT1
SHEET: –
JOB NO.

JOB #:
DRAWING NAME: STM DETAILS.DWG
CLIENT:
Drawing Path: S:\OHM\CADD\ACAD\DETAILS\COMMUNITIES\SCIO\STD_STM\STM DETAILS.DWG

DIA. OF WATER MAIN	THRUST BLOCK		
D	A	B	C
6"	1'8"	1'8"	9"
8"	2'0"	2'0"	12"
12"	3'0"	3'0"	15"
16"	4'0"	4'0"	18"
20"	6'0"	4'0"	21"
24"	7'0"	5'0"	2'0"

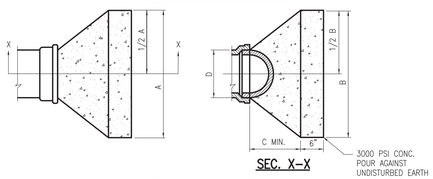

SEC. X–X

THRUST BLOCK AT PLUG

THRUST BLOCKS ALLOWED ONLY WITH APPROVAL OF UTILITIES DIRECTOR

DIA. OF WATER MAIN	THRUST BLOCK		
D	A	B	C
8"	2'0"	1'8"	15"
12"	3'3"	2'0"	18"
16"	4'0"	3'0"	21"

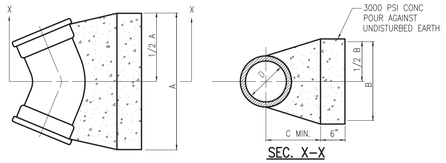

SEC. X–X

THRUST BLOCK AT 45° BEND

THRUST BLOCKS ALLOWED ONLY WITH APPROVAL OF UTILITIES DIRECTOR

DIA. OF WATER MAIN	THRUST BLOCK		
D	A	B	C
16"	2'0"	1'8"	12"
20"	2'6"	2'0"	15"
24"	2'9"	2'6"	18"

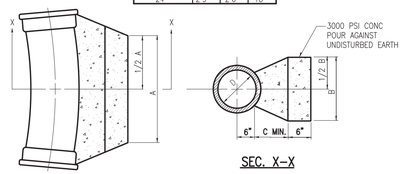

SEC. X–X

THRUST BLOCK AT 11 1/4° BEND

THRUST BLOCKS ALLOWED ONLY WITH APPROVAL OF UTILITIES DIRECTOR

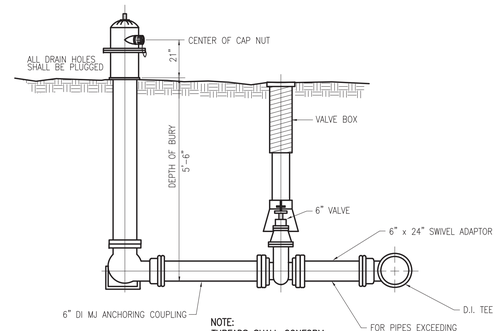

DIA. OF WATER MAIN	THRUST BLOCK		
D	A	B	C
6"	2'0"	1'8"	9"
8"	2'9"	2'0"	12"
12"	4'0"	3'0"	15"
16"	5'6"	4'0"	18"

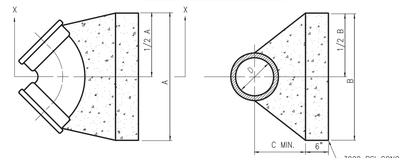

SEC. X–X

THRUST BLOCK AT 90° BEND

THRUST BLOCKS ALLOWED ONLY WITH APPROVAL OF UTILITIES DIRECTOR

DIA. OF WATER MAIN	THRUST BLOCK		
D	A	B	C
12"	2'0"	2'1"	18"
16"	3'0"	2'0"	21"
20"	3'9"	2'6"	2'0"

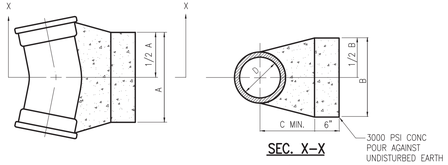

SEC. X–X

THRUST BLOCK AT 22 1/2° BEND

THRUST BLOCKS ALLOWED ONLY WITH APPROVAL OF UTILITIES DIRECTOR

DIA. OF TEE		THRUST BLOCK	
D	D_1	A	C
8"	8"	2'0"	21"
10"	8"	2'0"	21"
12"	8"	2'0"	21"
12"	12"	3'0"	2'0"
16"	12"	3'0"	2'0"
20"	12"	3'0"	2'0"
24"	12"	3'0"	2'0"
16"	16"	4'0"	2'3"
20"	16"	4'0"	2'3"
24"	16"	4'0"	2'3"

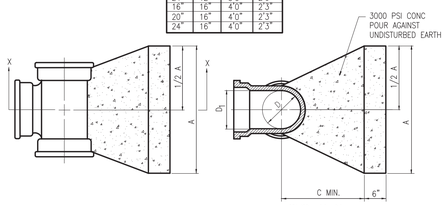

SEC. X–X

THRUST BLOCK AT TEE

THRUST BLOCKS ALLOWED ONLY WITH APPROVAL OF UTILITIES DIRECTOR



FIRE HYDRANT ASSEMBLY

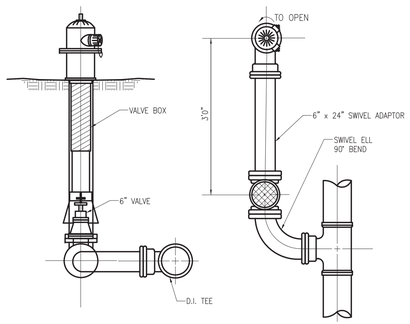

CLOSE COUPLE HYDRANT SETTING

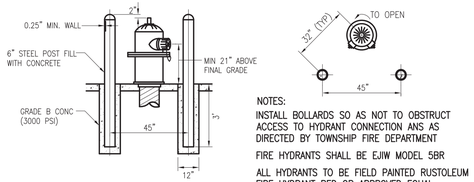

NOTES:

INSTALL BOLLARDS SO AS NOT TO OBSTRUCT ACCESS TO HYDRANT CONNECTION ANS AS DIRECTED BY TOWNSHIP FIRE DEPARTMENT

FIRE HYDRANTS SHALL BE EJIW MODEL 5BR

ALL HYDRANTS TO BE FIELD PAINTED RUSTOLEUM FIRE HYDRANT RED OR APPROVED EQUAL

BOLLARD DETAIL

NOTES:

INSTALL ADDITIONAL FITTINGS PIPE AS NECESSARY BETWEEN WATER MAIN & VALVE BOX TO ADJUST FOR PROPER LOCATION & GRADE OF HYDRANT ALL JOINTS ARE TO BE RESTRAINED WITH SWIVEL GLANDS.

HYDRANTS SHALL BE SUPPLIED WITH THE "HYDRA STORZ" NOZZLE OR APPROVED EQUAL

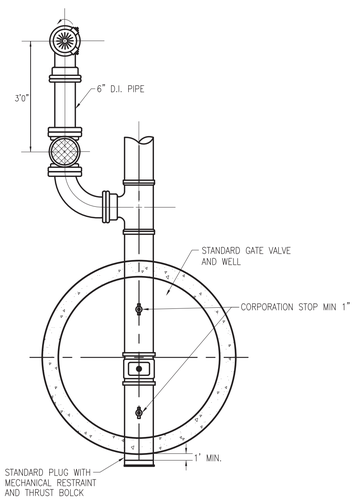

END OF WATER LINE OR TEMPORARY FIRE HYDRANT ASSEMBLY

NOTE:

END OF WATER LINE OR TEMPORARY FIRE HYDRANT ASSEMBLY ONLY USED AS APPROVED BY SCIO TOWNSHIP UTILITIES DEPARTMENT OR TOWNSHIP ENGINEER.

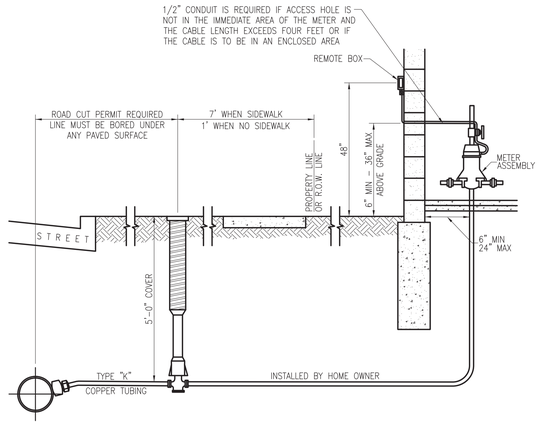

METER & SERVICE ASSEMBLY

NOTES:

NO WINDOW OR OBSTRUCTIONS ALLOWED ON OUTSIDE WALL ABOVE CONDUIT TO 4' ABOVE FINISHED GRADE.

REMOTE READER SHOULD BE LOCATED OUTSIDE OF ANY FENCED–IN AREA AND AWAY FROM BUSHES OR ANY OBSTRUCTIONS FOR EASY METER READER ACCESS.

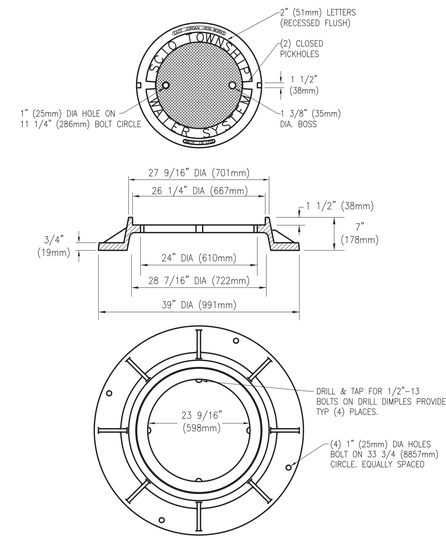

CAST IRON GATE WELL COVER AND GRADE RING

REVISIONS:

DATE | BID DATE

CADD | ENGINEER

DSN ENGINEER | PROJECT MGR

APPROVED | SCALE: V: H: NTS

COPYRIGHT © 2006 O.H. & M. INC. ALL DRAWINGS AND WRITTEN MATERIALS APPEARING HEREIN CONSTITUTE THE ORIGINAL AND UNPUBLISHED WORK OF O.H. & M. INC. AND THE SAME MAY NOT BE DUPLICATED, DISTRIBUTED, OR DISCLOSED WITHOUT PRIOR WRITTEN CONSENT OF O.H. & M. INC.

SCIO TOWNSHIP
WATER MAIN DETAILS

CLIENT:

ORCHARD, HILTZ & MCCLIMENT, INC.
CONSULTING ENGINEERS
34000 Plymouth Road
Livonia, MI 48150
(734) 522-6711
(734) 522-6427 FAX

DWG: WM DETAILS.DWG
LAYOUT: LAYOUT1

SHEET: –

JOB NO.

JOB #

CLIENT:

DRAWING NAME: WM DETAILS.DWG

Drawing Path: S:\OHM\CADD\ACAD\DETAILS\COMMUNITIES\SCIO\STD_WWA\WM DETAILS.DWG

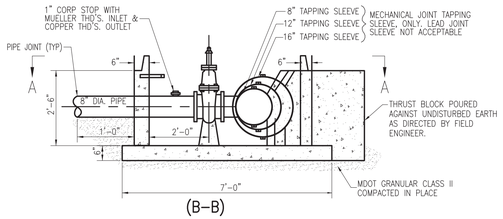

(B–B)

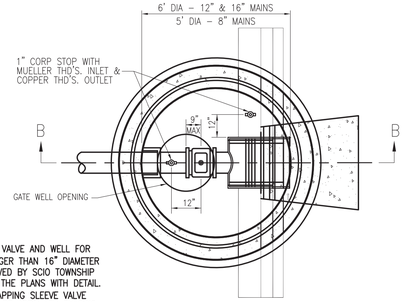

(PLAN VIEW, A–A)

NOTES:
TAPPING SLEEVE VALVE AND WELL FOR WATER MAIN LARGER THAN 16" DIAMETER MUST BE APPROVED BY SCIO TOWNSHIP AND SHOWN ON THE PLANS WITH DETAIL.
USE OF 8"x8" TAPPING SLEEVE VALVE AND WELL MUST BE APPROVED BY SCIO TOWNSHIP D.P.W.

8" TAPPING SLEEVE, VALVE & WELL

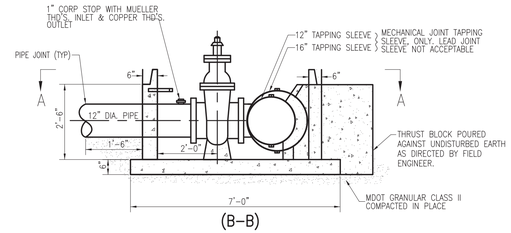

(B–B)

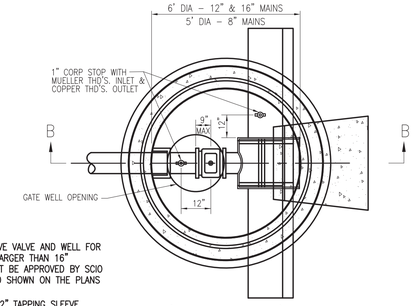

(PLAN VIEW, A–A)

NOTES:
TAPPING SLEEVE VALVE AND WELL FOR WATER MAIN LARGER THAN 16" DIAMETER MUST BE APPROVED BY SCIO TOWNSHIP AND SHOWN ON THE PLANS WITH DETAIL.
USE OF 12"x12" TAPPING SLEEVE VALVE AND WELL MUST BE APPROVED BY SCIO TOWNSHIP D.P.W.

12" TAPPING SLEEVE, VALVE & WELL

NOTES:
PRECAST CONCRETE GATE WELL SECTIONS SHALL BE MANUFACTURED IN ACCORDANCE WITH A.S.T.M. DESIGNATION C478 UNLESS OTHERWISE SPECIFIED

ECCENTRIC CONES ARE ALLOWED PROVIDED GATE VALVE IS CENTERED ON MANHOLE OPENING

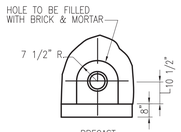

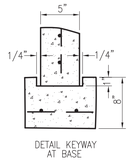

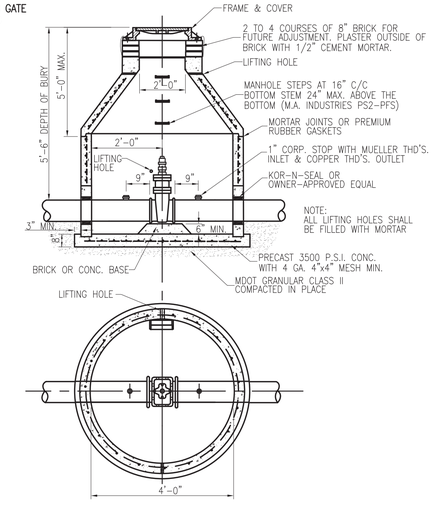

6", 8" & 12" GATE VALVE & WELL

NOTE:
PRECAST CONC. GATE WELL SECTIONS SHALL BE MANUFACTURED IN ACCORDANCE WITH A.S.T.M. DESIGNATION C478 UNLESS OTHERWISE SPECIFIED.

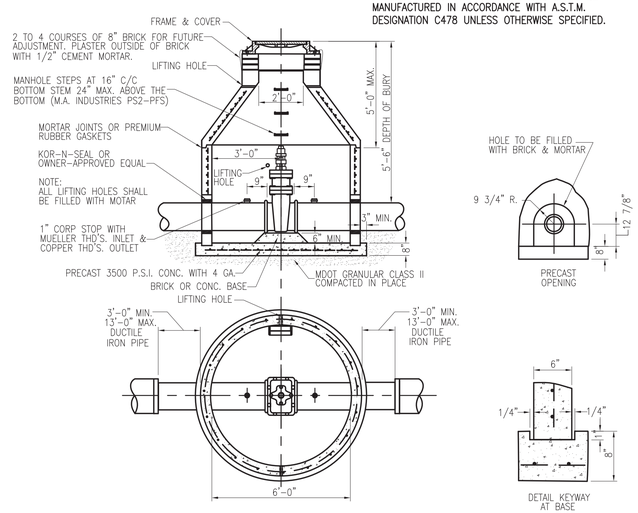

16" GATE VALVE & WELL

PIPE RESTRAINT SCHEDULE

Ground buried pressure pipe – Ductile Iron Pipe

PIPE DIAMETER	TEES, 90° PLUGS	45° BENDS	22 ½° BENDS	REDUCERS
6	40	25	25	30
8	55	25	25	30
12	80	35	25	55
16	100	40	25	60
24	135	56	25	65

Lengths of pipe restraint are given in feet.

If required, pipe diameter is not listed in this table; the next largest pipe shall be used.

This table is based on a test pressure of 180 PSI (operating pressure plus water hammer). For other test pressures, all values to be increased or decreased proportionally.

The values provided of restraint length are in each direction from the point of deflection or termination except for tees, at which only the branch in the direction of the stem.

If tie rods are used, use four rods minimum and add 1/8-inch to bar diameter as corrosion allowance.

Size reduction is based upon the pipe diameter shown in this table.

Based upon:

Internal Pressure:	180
Pipe Depth:	5
Bedding Class:	Type 4
Soil Type:	Good Sand
Safety Factor:	2

SCIO TOWNSHIP
STANDARD WATER MAIN CONSTRUCTION NOTES

1. ALL CONSTRUCTION PROCEDURES AND MATERIALS USED ON ALL WATER MAIN PROJECTS SHALL CONFORM TO THE CURRENT SCIO TOWNSHIP ENGINEERING STANDARDS AND DESIGN SPECIFICATIONS MANUAL.
2. NO INSTALLATION OF WATER MAIN SHALL TAKE PLACE WITHOUT TOWNSHIP'S INSPECTOR BEING PRESENT. UNLESS OTHERWISE SPECIFIED ON THE PLANS, TOP OF ALL WATER MAINS SHALL BE 5.5 FEET BELOW EXISTING OR PROPOSED GROUND, WHICHEVER APPLIES. 18 INCHES MINIMUM VERTICAL CLEARANCE SHALL BE MAINTAINED AT ALL EXISTING AND PROPOSED UTILITY CROSSINGS.
3. A MECHANICAL JOINT RESTRAINT SYSTEM SUCH AS MEGA LUGS OR LOCKING GASKETS SHALL BE USED FOR JOINT RESTRAINT INSTEAD OF CONCRETE THRUST BLOCKS.
4. POLY–WRAP SHALL BE USED AS REQUIRED BY SCIO TOWNSHIP.
5. A MINIMUM OF 10 FEET HORIZONTAL SEPARATION MUST BE MAINTAINED BETWEEN WATER MAIN AND SANITARY SEWERS, LEADS AND/OR STORM SEWERS. A MINIMUM OF 5 FEET HORIZONTAL SEPARATION MUST BE MAINTAINED BETWEEN WATER MAINS AND ANY UNDERGROUND UTILITY STRUCTURES AS MEASURED FROM THE OUTSIDE WALL OF ANY STRUCTURE.
6. WHERE WORK IS TO BE PERFORMED IN THE VICINITY OF A SCIO TOWNSHIP MAIN, CONTRACTOR SHALL NOTIFY THE UTILITIES DEPARTMENT AT LEAST THREE WORKING DAYS PRIOR TO START OF CONSTRUCTION AND SCHEDULE AN INSPECTOR IF NECESSARY.
7. CONTACT MISS DIG AT 1–800–482–7171 THREE WORKING DAYS BEFORE DIGGING.
8. WHERE WATER MAIN IS LOCATED UNDER PAVEMENT, SCIO TOWNSHIP WILL NOT BE RESPONSIBLE FOR REPAIRING PAVEMENT WITHIN THE EASEMENT IN THE EVENT THAT MAINTENANCE OR REPAIRS TO THE WATER MAIN BECOME NECESSARY.

WATER MAIN MATERIALS

1. ALL WATER MAINS SHALL BE DUCTILE IRON MANUFACTURED IN ACCORDANCE WITH AWWA C151 (ANSI A21.51), LATEST REVISION. PIPE SHALL BE A MINIMUM STANDARD WALL THICKNESS CLASS 54 FOR PIPE DIAMETERS OF 6 THRU 16 INCH INCLUSIVE, THICKNESS CLASS 55 FOR 20 INCH, AND THICKNESS CLASS 56 FOR LARGER THAN 20 INCH. PIPE SHALL BE STANDARD CEMENT DOUBLE THICKNESS LINED IN ACCORDANCE WITH AWWA C104 (ANSI A21.4), LATEST REVISION. PIPE EXTERIOR SHALL BE SEAL COATED WITH AN APPROVED BITUMINOUS SEAL COAT.
2. JOINTS FOR WATER MAIN SHALL BE PUSH–ON TYPE CONFORMING TO AWWA C111 (ANSI A21.11) STANDARD SPECIFICATION, LATEST REVISION. RUBBER GASKETS, RETAINER GLANDS, AND LUBRICANT SHALL BE FURNISHED WITH THE PIPE AND SHALL MEET THE PIPE MANUFACTURER'S REQUIREMENTS.
3. ALL HYDRANTS SHALL BE EAST JORDAN IRON WORKS MODEL 5BR 250 OR MUELLER A–425 SUPER CENTURION 250 AND SHALL CONFORM TO AWWA C–502, LATEST REVISION. THE FIRE HYDRANT VALVE SHALL BE 5 ¼ INCH DIAMETER. IF HYDRANTS ARE FURNISHED WITH DRAIN HOLES, THE HOLES SHALL BE PLUGGED AND WATERTIGHT. ALL HYDRANTS SHALL BE INSTALLED WITH A SIX 6 INCH ISOLATION VALVE WITH AN APPROVED VALVE BOX, SET AT FINISHED GRADE AND CENTERED OVER THE VALVE–OPERATING NUT, FREE OF DIRT AND DEBRIS. HYDRANTS SHALL BE SET SO THE CENTERLINE OF THE NOZZLE IS 21 INCHES ABOVE FINISHED GRADE. THE CONTRACTOR SHALL PROVIDE ONE REPAIR KIT FOR EVERY FIVE HYDRANTS ADDED TO THE SYSTEM. HYDRANTS MUST BE PAINTED RUSTOLEUM "FIRE HYDRANT RED" AND SHALL OPEN IN A COUNTER–CLOCKWISE (LEFT) DIRECTION WITH A STANDARD 1–3/8 INCH PENTAGON NUT. HYDRANTS SHALL HAVE A CENTER STEM WITH A DOUBLE "O" RING SEAL. THE HYDRANT VALVE SHALL BE 5 ¼ INCH DIAMETER AND THE BARREL AND HEAD SHALL BE CAST IRON WITH A BREAKABLE TRAFFIC SAFETY FLANGE. HYDRANTS SHALL HAVE ONE 3–3/8 INCH PUMPER CONNECTION WITH 7 ½ THREADS PER INCH (ANN ARBOR STANDARDS) AND ONE 4–INCH STORZ CONNECTION. THE STORZ CONNECTION SHALL BE THE HARRINGTON INTEGRAL STORZ AND ATTACHED WITH A CABLE AND PRESSURE CAP. A NOZZLE CAP SHALL BE PROVIDED FOR THE 3–3/8 INCH CONNECTION, ATTACHED TO THE HYDRANT WITH A NON–LINKING CHAIN. ALL HYDRANTS SHALL HAVE 6–FEET OF BURY FROM THE TOP OF CURB.
4. GATE VALVES SHALL BE MANUFACTURED IN CONFORMANCE WITH THE APPLICABLE REQUIREMENTS OF AMERICAN WATER WORKS ASSOCIATION (AWWA) C509, LATEST REVISION. THE VALVES SHALL BE OF DUCTILE IRON BODY AND BONNET, FULLY BRONZE MOUNTED, WITH BRONZE STEMS. VALVES FOR WATER MAINS 16 INCH DIAMETER OR SMALLER SHALL BE RESILIENT SEATED WEDGE VALVES, EAST JORDAN IRON WORKS C515 OR MUELLER A–2360–20. VALVE STEMS SHALL BE BRONZE OF A NON–RISING DESIGN WITH DOUBLE "O" RING PACKING. GATE VALVES SHALL HAVE A 2 INCH SQUARE OPERATING NUT THAT TURNS RIGHT (CLOCKWISE) TO OPEN. GATE WELLS SHALL BE CONSTRUCTED OF REINFORCED CONCRETE SECTIONS IN ACCORDANCE WITH DETAILS SHOWN ON THE STANDARD PLANS. PRECAST REINFORCED CONCRETE GATE WELL SECTIONS SHALL CONFORM TO ASTM C478. ALL TAPPING SLEEVES AND VALVES ARE TO BE PLACED IN A GATE WELL UNLESS OTHERWISE SHOWN OR NOTED ON THE PLANS.

COPYRIGHT © 2006 O.H. & M. INC. ALL DRAWINGS AND WRITTEN MATERIALS APPEARING HEREIN CONSTITUTE THE ORIGINAL AND UNPUBLISHED WORK OF O.H. & M. INC. AND THE SAME MAY NOT BE DUPLICATED, DISTRIBUTED, OR DISCLOSED WITHOUT PRIOR WRITTEN CONSENT OF O.H. & M. INC.

REVISIONS:

DATE | BID DATE
CADD | ENGINEER
DSN ENGINEER | PROJECT MGR
APPROVED | SCALE V: H: NTS

SCIO TOWNSHIP
WATER MAIN DETAILS

CLIENT:

ORCHARD, HILTZ & MCCLIMENT, INC.
OHM CONSULTING ENGINEERS
34000 Plymouth Road
Livonia, MI 48150
(734) 522–6711
(734) 522–6427 FAX

DWG: WM DETAILS.DWG
LAYOUT: LAYOUT1
SHEET –
JOB NO.

Drawing Path: S:\OHM\CADD\ACAD\DETAILS\COMMUNITIES\SCIO\STD_WW\WM DETAILS.DWG
CLIENT:
DRAWING NAME: WM DETAILS.DWG
JOB #

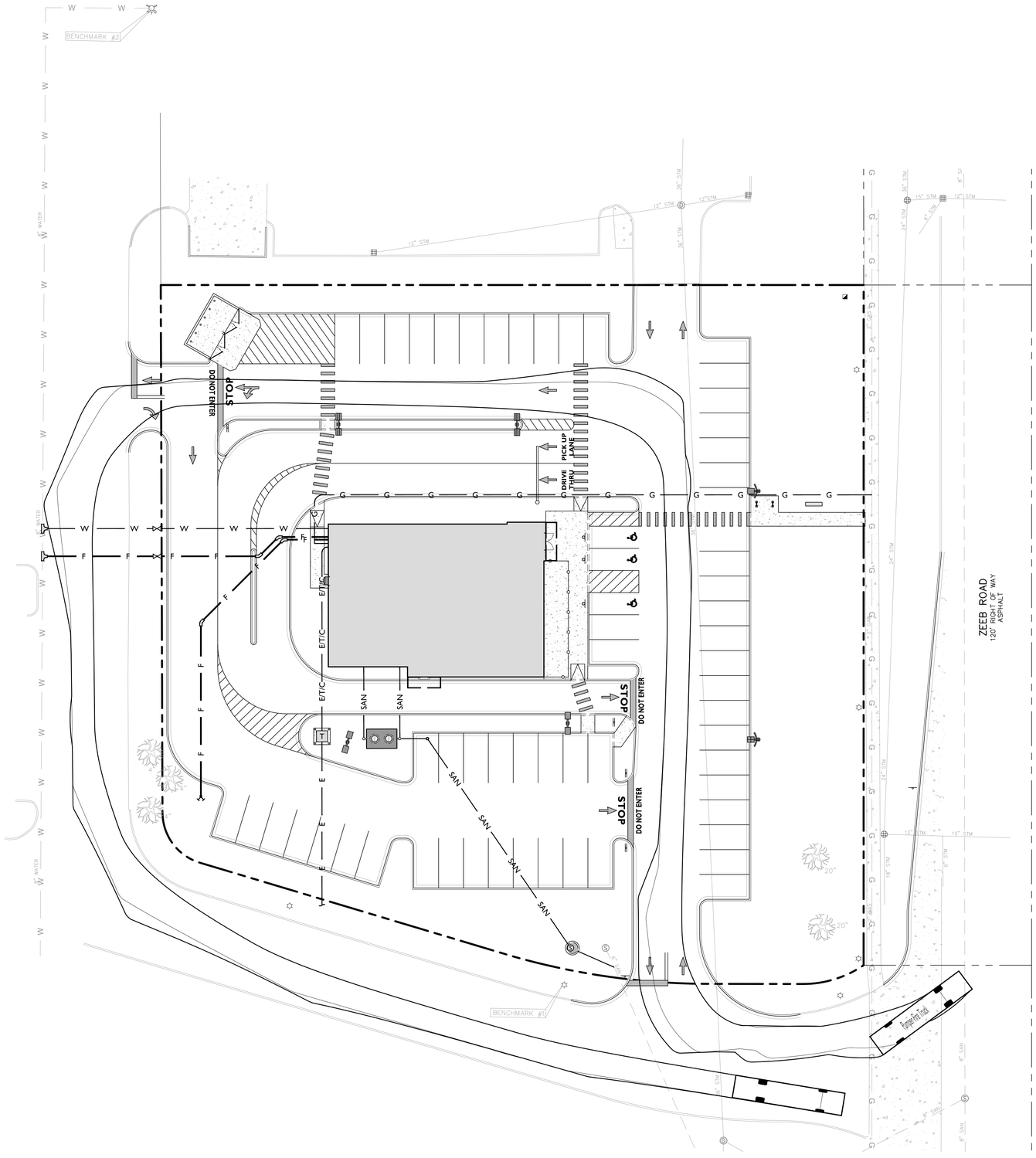

SYMBOL	DESCRIPTION
— — —	PROPERTY LINE

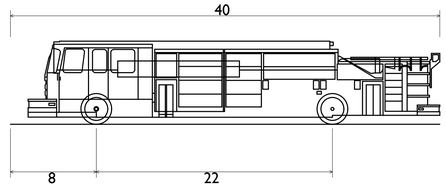

Pumper Fire Truck	
Overall Length	40.000ft
Overall Width	8.167ft
Overall Body Height	7.745ft
Min Body Ground Clearance	0.656ft
Track Width	8.167ft
Lock-to-lock time	5.00s
Max Wheel Angle	45.00°

20' 0' 20' 40'
GRAPHIC SCALE IN FEET
1" = 20'

ISSUE	DATE	BY	DESCRIPTION
3.2	11/02/2021	MG	REVISED PER STAFF REPORT DATED 10/28/2021
3.1	10/05/2021	MPH	REVISED PER ASPHALT PARKING AREA
3	09/22/2021	MG	FOR SITE PLAN APPROVAL
2	05/12/2021	MH	FOR CONDITIONAL USE APPROVAL
1	04/01/2021	AF	FOR CLIENT REVIEW

NOT APPROVED FOR CONSTRUCTION

STONEFIELD
engineering & design
Detroit, MI · Rutherford, NJ · New York, NY
Princeton, NJ · Tampa, FL · Boston, MA
www.stonefieldeng.com
607 Shelby Suite 200, Detroit, MI 48226
Phone 248.247.1115

SITE DEVELOPMENT PLAN

140 S. ZEEB ROAD

PROPOSED FAST FOOD RESTAURANT

PARCEL ID: H-08-21-400-035
140 S. ZEEB ROAD
TOWNSHIP OF SCIO
WASHTENAW COUNTY, MICHIGAN 48103

STATE OF MICHIGAN
JONATHAN REID COOKSEY
ENGINEER
No. 201069428
LICENSED PROFESSIONAL ENGINEER

STONEFIELD
engineering & design

SCALE: 1" = 20' | PROJECT ID: DET-200325

TITLE:
FIRE TRUCK CIRCULATION EXHIBIT

DRAWING:
EX-1

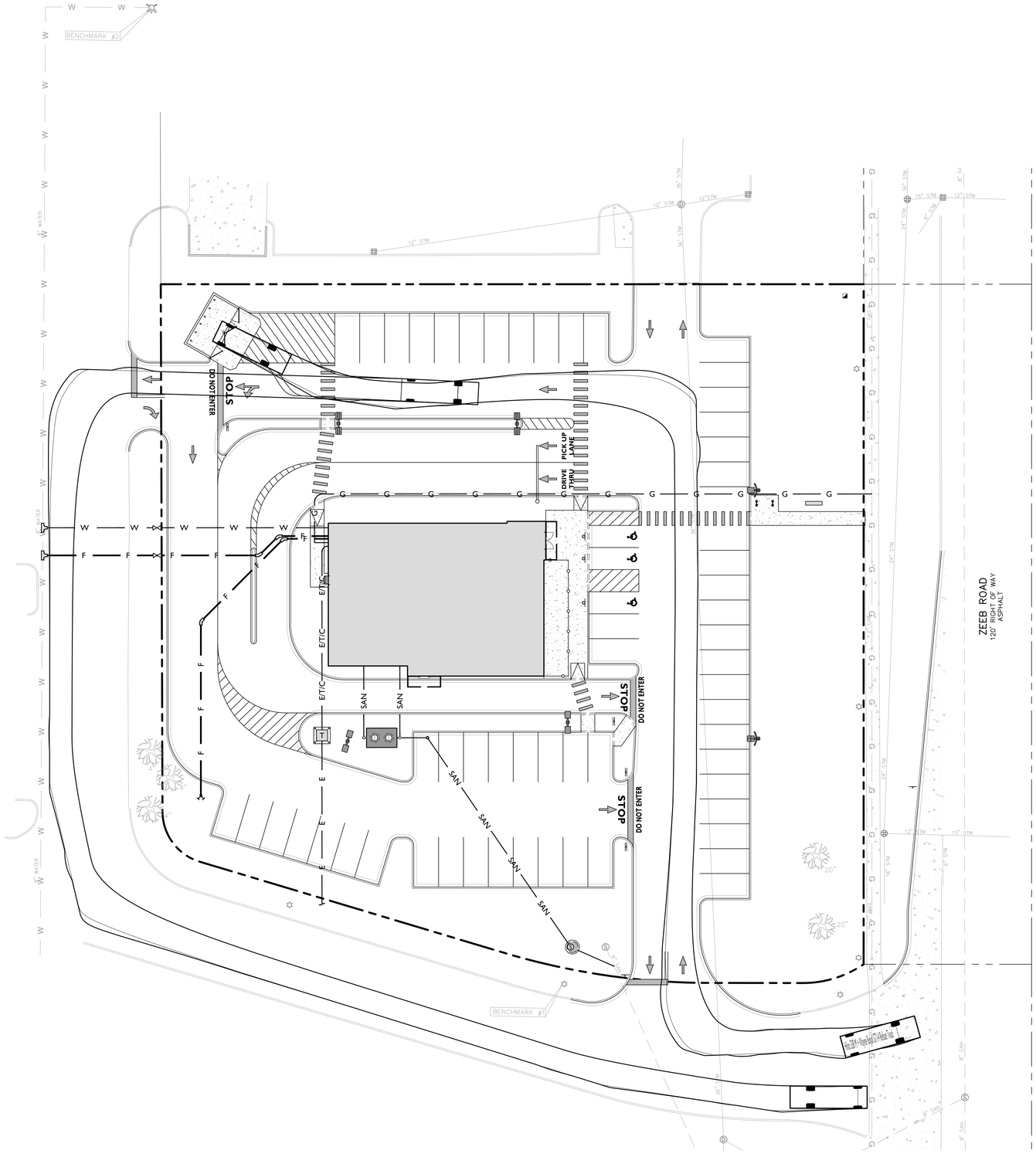

SYMBOL	DESCRIPTION
— — —	PROPERTY LINE

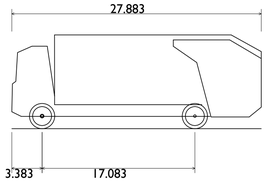

Hino 338 M + Wayne Royal GT14 Refuse Truck

Overall Length	27.883ft
Overall Width	8.042ft
Overall Body Height	10.488ft
Min Body Ground Clearance	1.318ft
Track Width	8.042ft
Lock-to-lock time	6.00s
Curb to Curb Turning Radius	27.400ft

ISSUE	DATE	BY	DESCRIPTION
3.2	11/02/2021	MG	REVISED PER STAFF REPORT DATED 10/28/2021
3.1	10/05/2021	MPH	REVISED PER ASPHALT PARKING AREA
3	09/22/2021	MG	FOR SITE PLAN APPROVAL
2	05/12/2021	MH	FOR CONDITIONAL USE APPROVAL
1	04/01/2021	AF	FOR CLIENT REVIEW

NOT APPROVED FOR CONSTRUCTION

STONEFIELD
engineering & design
Detroit, MI · Rutherford, NJ · New York, NY
Princeton, NJ · Tampa, FL · Boston, MA
www.stonefieldeng.com
607 Shelby Suite 200, Detroit, MI 48226
Phone 248.247.1115

SITE DEVELOPMENT PLAN

140 S. ZEEB ROAD

PROPOSED FAST FOOD RESTAURANT

PARCEL ID: H-08-21-400-035
140 S. ZEEB ROAD
TOWNSHIP OF SCIO
WASHTENAW COUNTY, MICHIGAN 48103

STATE OF MICHIGAN
JONATHAN REID COORSEY
ENGINEER
No. 6201069428
LICENSED PROFESSIONAL ENGINEER

STONEFIELD
engineering & design

SCALE: 1" = 20' | PROJECT ID: DET-200325

TITLE:

TRASH TRUCK CIRCULATION EXHIBIT

DRAWING:

EX-2

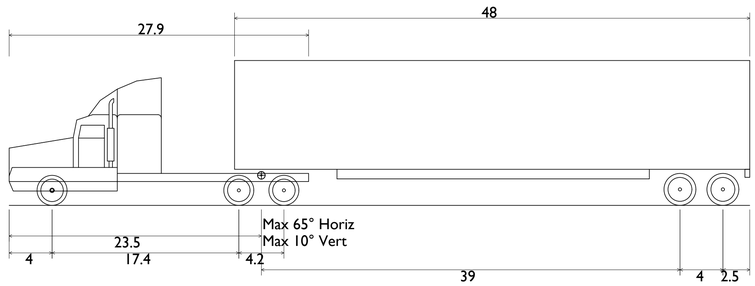

SYMBOL	DESCRIPTION
— — —	PROPERTY LINE

WB-62 - Interstate Semi-Trailer

Overall Length	69.000ft
Overall Width	8.500ft
Overall Body Height	13.500ft
Min Body Ground Clearance	1.334ft
Max Track Width	8.500ft
Lock-to-lock time	6.00s
Max Steering Angle (Virtual)	28.40°

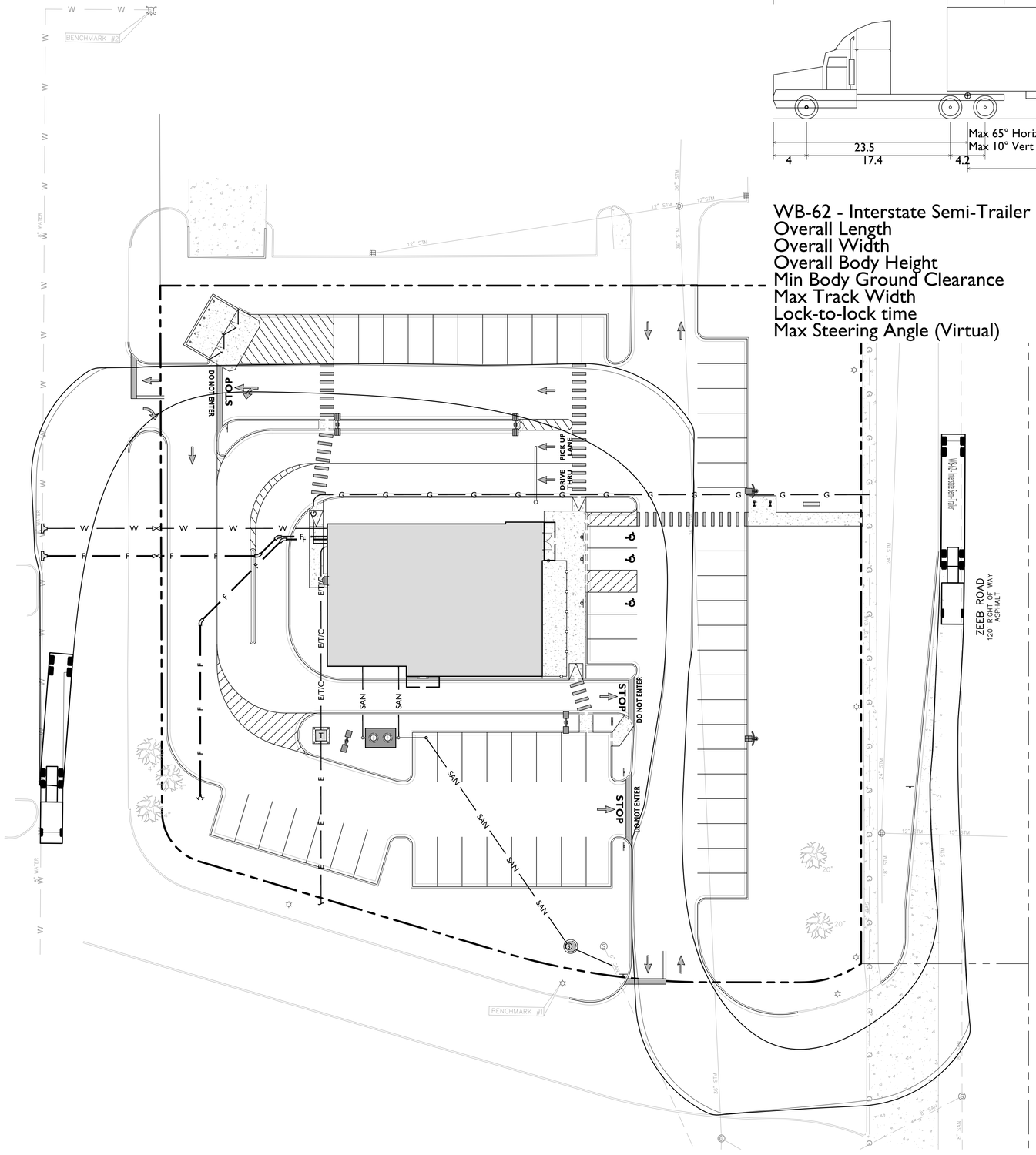

20' 0' 20' 40'
GRAPHIC SCALE IN FEET
1" = 20'

ISSUE	DATE	BY	DESCRIPTION
3.2	11/02/2021	MG	REVISED PER STAFF REPORT DATED 10/28/2021
3.1	10/05/2021	MPH	REVISED PER ASPHALT PARKING AREA
3	09/22/2021	MG	FOR SITE PLAN APPROVAL
2	05/12/2021	MH	FOR CONDITIONAL USE APPROVAL
1	04/01/2021	AF	FOR CLIENT REVIEW

NOT APPROVED FOR CONSTRUCTION

STONEFIELD engineering & design
Detroit, MI · Rutherford, NJ · New York, NY
Princeton, NJ · Tampa, FL · Boston, MA
www.stonefieldeng.com
607 Shelby Suite 200, Detroit, MI 48226
Phone 248.247.1115

SITE DEVELOPMENT PLAN

140 S. ZEEB ROAD

PROPOSED FAST FOOD RESTAURANT

PARCEL ID: H-08-21-400-035
140 S. ZEEB ROAD
TOWNSHIP OF SCIO
WASHTENAW COUNTY, MICHIGAN 48103

STATE OF MICHIGAN
JONATHAN REID COOKSEY
ENGINEER
No. 201069428
LICENSED PROFESSIONAL ENGINEER

STONEFIELD engineering & design

SCALE: 1" = 20' | PROJECT ID: DET-200325

TITLE:
DELIVERY TRUCK (WB-62) CIRCULATION EXHIBIT

DRAWING:
EX-3

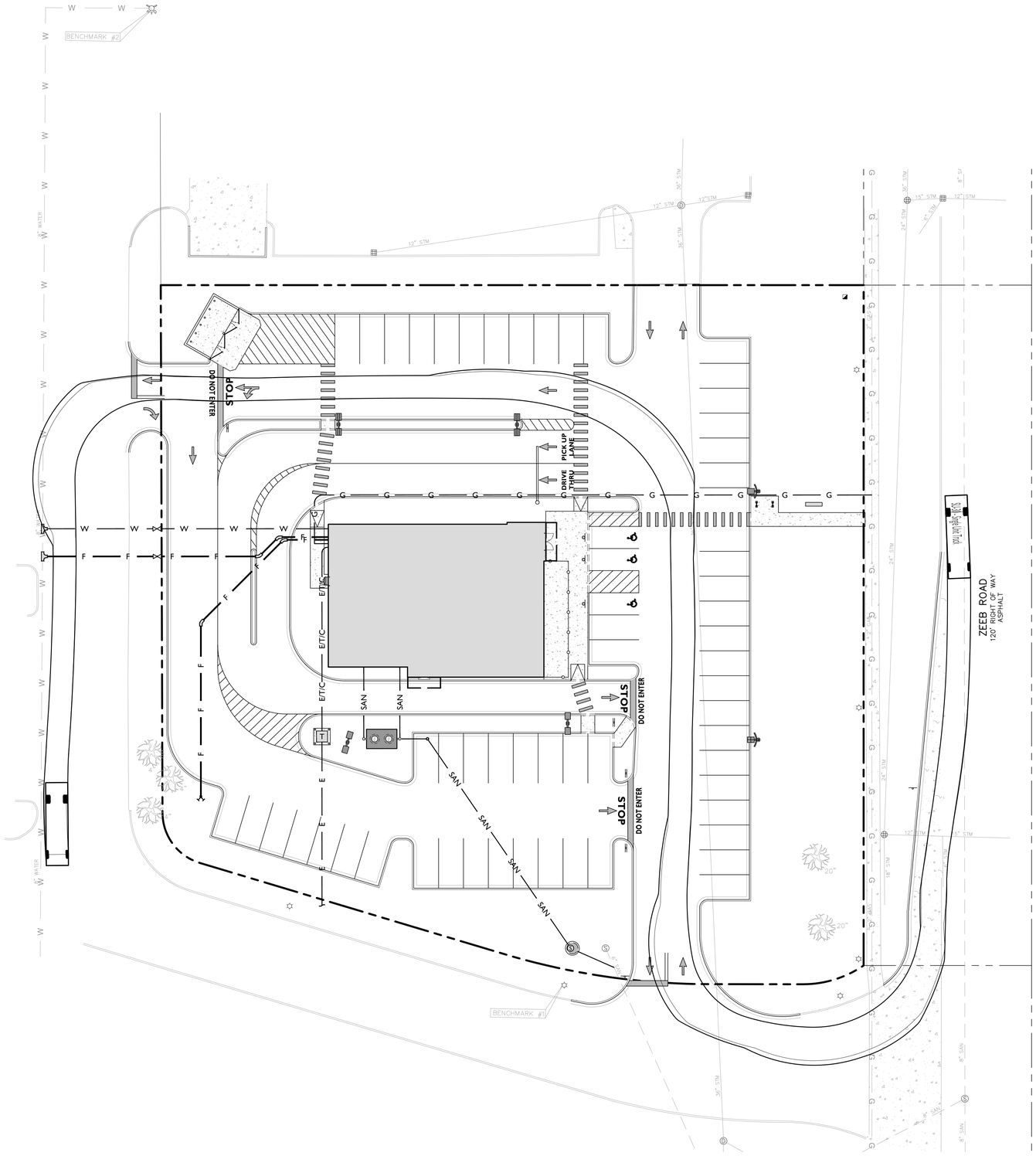

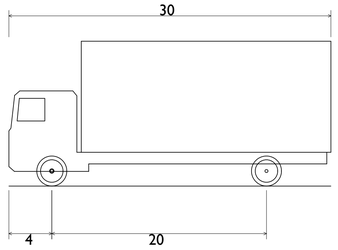

SYMBOL	DESCRIPTION
— — —	PROPERTY LINE

SU-30 - Single Unit Truck	
Overall Length	30.000ft
Overall Width	8.000ft
Overall Body Height	13.500ft
Min Body Ground Clearance	1.367ft
Track Width	8.000ft
Lock-to-lock time	5.00s
Max Steering Angle (Virtual)	31.80°

20' 0' 20' 40'
GRAPHIC SCALE IN FEET
1" = 20'

ISSUE	DATE	BY	DESCRIPTION
3.2	11/02/2021	MG	REVISED PER STAFF REPORT DATED 10/28/2021
3.1	10/05/2021	MPH	REVISED PER ASPHALT PARKING AREA
3	09/22/2021	MG	FOR SITE PLAN APPROVAL
2	05/12/2021	MH	FOR CONDITIONAL USE APPROVAL
1	04/01/2021	AF	FOR CLIENT REVIEW

NOT APPROVED FOR CONSTRUCTION

STONEFIELD engineering & design
Detroit, MI · Rutherford, NJ · New York, NY
Princeton, NJ · Tampa, FL · Boston, MA
www.stonefieldeng.com
607 Shelby Suite 200, Detroit, MI 48226
Phone 248.247.1115

SITE DEVELOPMENT PLAN

140 S. ZEEB ROAD

PROPOSED FAST FOOD RESTAURANT

PARCEL ID: H-08-21-400-035
140 S. ZEEB ROAD
TOWNSHIP OF SCIO
WASHTENAW COUNTY, MICHIGAN 48103

STATE OF MICHIGAN
JONATHAN REID COOKSEY
ENGINEER
No. 201069428
LICENSED PROFESSIONAL ENGINEER

STONEFIELD engineering & design

SCALE: 1" = 20' | PROJECT ID: DET-200325

TITLE:
DELIVERY TRUCK (SU-30) CIRCULATION EXHIBIT

DRAWING:
EX-4

Township of Scio
827 N. Zeeb Road · Ann Arbor, MI 48103
734/369-9400 · 734/665-0825 Fax
www.ScioTownship.org

Applications will not be processed until deemed complete. Incomplete applications will be destroyed after 90 days.

ORDINANCE AMENDMENT 21005

PROPERTY ID NO. H-08-23-300-001; H-08-23-300-002

ZONING DISTRICT Recreation Conservation (RC)

PROPOSED DISTRICT Planned Unit Development (PUD)

APPLICATION DATE

PETITIONER: Norfolk Development Corporation
AGENT/DEVELOPER
8178 Jackson Road, Suite D
STREET, NUMBER
Ann Arbor, MI 48103
CITY, STATE, ZIP
734-408-0777 - Jim Haeussler
PHONE
734-408-0780
FAX
Jhaeussler@norfolk-homes.com
EMAIL

OWNER: Columbus Home Company of Ann Arbor
NAME
530 Elizabeth Street
STREET, NUMBER
Ann Arbor, MI 48104
CITY, STATE, ZIP
PHONE
FAX
EMAIL

PROPERTY ADDRESS: 3991 Dexter-Ann Arbor Road **SIZE OF PROPERTY (AREA):** 46.69 acres

LEGAL DESCRIPTION: ☒ ATTACHED

AREA DESCRIPTION: ATTACH SEPARATE INFORMATION PURSUANT TO SECTION 36-461 OF THE SCIO TOWNSHIP ZONING ORDINANCE.

PURPOSE OF AMENDMENT: The proposed development is a single family residential development with a proposed rezoning to a Planned Unit Development with clustering of the lots in order to provide additional open space with site amenities including pathways to the existing pavilion and preservation of natural features including trees and woodland.

I AGREE TO GIVE PERMISSION FOR OFFICIALS OF SCIO TOWNSHIP TO ENTER THE PROPERTY SUBJECT TO THIS APPLICATION FOR PURPOSES OF INSPECTION.

☑ *Property owner authorization letter attached.*

Norfolk Development Corp.
By: [signature] 8/27/21
SIGNATURE OF PETITIONER DATE

SIGNATURE OF OWNER DATE

James G. Haeussler
Development Director
PRINT NAME

PRINT NAME/TITLE

#1-20210902#021912$500.00 (1/2) FEES $3840.00 (2/2)

FOR OFFICE USE ONLY

THIS PETITION HAS BEEN REVIEWED FOR COMPLIANCE WITH THE TOWNSHIP ZONING ORDINANCE, AND FOR ACCURACY OF PROPERTY DESCRIPTION:

ORDINANCE ADMINISTRATOR DATE

PUBLIC HEARING NOTICE:
PUBLIC HEARING DATE:
PLANNING COMM. RECOMMENDATION:
☐ APPROVED, DATE
☐ DENIED, DATE
TOWNSHIP BOARD OF TRUSTEES:
☐ APPROVED, DATE
☐ DENIED, DATE

APPLICATION RECEIVED:

TOWNSHIP CLERK DATE

FEE RECEIVED DATE

Township of Scio

827 N. Zeeb Road · Ann Arbor, MI 48103
734/369-9400 · 734/665-0825 Fax
www.ScioTownship.org

Applications will not be processed until deemed complete. Incomplete applications will be destroyed after 90 days.

SITE PLAN 2012

☐ ADMINISTRATIVE SITE PLAN
☒ FULL SITE PLAN

DATE _____

PROPERTY ID NO. H-08-23-300-001, H-08-23-300-002

ZONING DISTRICT Recreation Conservation; rezoning to PUD

APPLICANT: Norfolk Development Corporation
AGENT/DEVELOPER
8178 Jackson Road, Suite D
STREET, NUMBER
Ann Arbor, MI 48103
CITY, STATE, ZIP
734-408-0777 - Jim Haeussler
PHONE
734-408-0780
FAX
Jhaeussler@norfolk-homes.com
EMAIL

OWNER: Columbus Home Company of Ann Arbor
NAME
530 Elizabeth Street
STREET, NUMBER
Ann Arbor, MI 48104
CITY, STATE, ZIP
PHONE
FAX
EMAIL

PROPOSED NAME OF DEVELOPMENT: 3991 Dexter-Ann Arbor Road

ADDRESS OF PROPERTY (OR POPULAR ADDRESS): 3991 Dexter-Ann Arbor Road

LEGAL DESCRIPTION: ☐ ATTACHED ☑ ON SITE PLAN

LOT SIZE: 46.69 acres (AREA) **DEED RESTRICTIONS:** ☑ NONE ☐ ATTACHED

DESCRIPTION OF PROPOSED USE: Single family residential planned unit development with community well and community wastewater facility and associated infrastructure, stormwater management, and lansdcaping.

STORIES: ☐ EXISTING _____ ☑ NEW 2.5 stories max

SQ. FT.: ☐ ADDITION _____ ☑ NEW TBD, 47 residential lots

SQ. FT. BY USE:
☐ COMMERCIAL _____
☐ OFFICE _____
☐ WAREHOUSE _____
☐ MANUFACTURING _____
☑ OTHER Residential - 47 lots

SANITARY FACILITIES: ☐ SEWER ☑ SEPTIC Community wastewater facility

WATER: ☐ MUNICIPAL ☑ PRIVATE WELL

I AGREE TO GIVE PERMISSION FOR OFFICIALS OF SCIO TOWNSHIP TO ENTER THE PROPERTY SUBJECT TO THIS APPLICATION FOR PURPOSES OF INSPECTION.

☑ *Property owner authorization letter attached.*

Norfolk Development Corp.
By: _____ 9/27/21
SIGNATURE OF APPLICANT DATE

_____ _____
SIGNATURE OF OWNER DATE

James G. Haeussler
Development Director
PRINT NAME

_____
PRINT NAME/TITLE

fees - see OA Application

FOR OFFICE USE ONLY

THIS APPLICATION HAS BEEN REVIEWED FOR COMPLIANCE WITH THE TOWNSHIP ZONING ORDINANCE, AND FOR ACCURACY OF PROPERTY DESCRIPTION:

_____ _____
ORDINANCE ADMINISTRATOR DATE

PLANNING COMMISSION ACTION:
☐ APPROVED, DATE _____
☐ DENIED, DATE _____

TOWNSHIP BOARD:
☐ APPROVED, DATE _____
☐ DENIED, DATE _____

APPLICATION RECEIVED DATE: _____
FEE RECEIVED: CASH _____ CHECK _____
SP _____ DATE _____
SW _____
WA _____

EXPIRATION DATE: _____

Carlisle | Wortman
ASSOCIATES, INC.
117 NORTH FIRST STREET SUITE 70 ANN ARBOR, MI 48104 734.662.2200 734.662.1935 FAX

Date: October 6, 2021
Revised: December 6, 2021

Preliminary PUD / Rezoning Review
For
Scio Township, Michigan

File No.:	OA #21005 PUD / PSP #21012
Applicant:	Norfolk Development Corporation
Project Name:	Knights of Columbus (3991 Dexter-Ann Arbor Road)
Location:	South side Dexter-Ann Arbor Road between Wagner and W. Delhi, immediately north of I-94 (H-08-23-300-001 and H-08-23-300-002)
Current Zoning:	R-C, Recreation-Conservation
Plan Date:	August 27, 2021
Revised Date:	November 5, 2021
Action Requested:	Preliminary PUD Review
Required Information:	As noted below.

PROJECT AND SITE DESCRIPTION

We are in receipt of the revised preliminary planned unit development (PUD) application for the former Knights of Columbus campground property located at 3991 Dexter-Ann Arbor Road for a detached, 46-unit single-family residential development. The development is located on the south side of Dexter-Ann Arbor Road between Wagner and W. Delhi Roads. The subject site encompasses two (2) properties containing 47 acres of vacant property containing woodlands, open water pond (wetland) and steep slopes. The property is zoned R-C, Recreation-Conservation. The applicant is proposing to cluster development in order to preserve natural features on the site. Approximately 70% (33 acres) of the site

will be preserved as open space including the preservation of existing woodland, landmark trees and open water wetland.

A community wastewater system is proposed to be utilized to handle the development's sewage waste. Community wastewater systems require a conditional use approval. However, since the applicant is proposing a PUD, the community wastewater system will be reviewed during the PUD review process, and a separate conditional use application will not be required to be submitted and reviewed separately. The development will also utilize a community well for water supply.

The proposed residential gross density of the development is 1 unit per acre (46 dwelling units/47 gross acres). The project is noted to be constructed in a single phase. Allowable density based on a density parallel plan is discussed in in more detail below.

An aerial photograph of the subject site and its surroundings is provided below:



Zoning Classification of Parcel, Adjacent Parcels, and Current Land Use:

The subject site is currently vacant and most recently farmed containing woodlands, wetlands and steep slopes. Uses surrounding the subject site include existing single-family residential.

Direction	Zoning	Use
North	R-1, Single Family Residential	Existing Single-Family Residential
South	I-94	I-94
East	AG, General Agricultural	Existing Single-Family Residential
West	R-2, Single-Family Residential	Existing Single-Family Residential

Items to be Addressed: *None.*

PROJECT ELIGIBILITY

Section 36-245(c) requires the applicant demonstrate through the submission of both written documentation and site development plans that all of the following criteria are met:

1. *The PUD district is intended to permit flexibility in the regulation of land development, encourage innovation in land use and variety in design, layout and type of structures constructed, achieve economy and efficiency in the use of land, natural resources, energy and the provision of public services and utilizes, encourage useful open space, and provide better housing, employment and shopping opportunities particularly suited to the needs of residents.*

CWA Comments: The applicant's narrative states "this residential development meets the intent of the PUD ordinance by clustering of residential units to maximize open space on the site. This clustering of homes within the existing open field on the site also allows for the preservation of the existing natural features. The open space areas encompass approximately 71% of the site while still maintaining a density that aligns with the Scio Township Master Plan. The development includes several pedestrian pathways and sidewalk routes that provide connectivity within the development to promote recreation and social gathering activities within the community. The proposed planned unit development meets the overall goals of the Scio Township Master Plan, goals for the Huron river sub-area that included focused development along the Ann Arbor-Dexter Corridor, while preserving the majority of the Priority 3 bio-reserve that is identified on the site with the Scio Township Master Plan."

The applicant indicates the development preserves a large portion of the site for conservation of the Priority 3 bio-reserve, existing woodlands, wetlands, and steep slopes, as noted in other sections of this report, we are concerned with the proposed density and overall benefit(s) this development will bring to the community, and whether those benefits are commensurate with the number and size of the requested deviations needed for the project. Deviations are specifically noted in the sections below. We note the applicant discusses conservation of the Priority 3 bio-reserve. The location of the bio-reserve is noted on Sheet 03 of the revised site plan submittal. We note that tree removal for development of the five (5) southernmost lots, the location of the community wastewater system, and play area are located within the bio-reserve area. Removal of residential units form the bio-reserve area should be considered.

2. *Approval of a PUD **must** result in one or more of the following:*

   (a) *A recognizable and material benefit to the ultimate users of the project and to the community, where such benefit would otherwise be unfeasible or unlikely to be achieved without application of the PUD regulations;*

(b) *Protection and preservation of natural resources and natural features of a quantity and/or quality that can be clearly demonstrated, where such benefit would otherwise be unfeasible or unlikely to be achieved without application of the PUD regulations; or*

(c) *A nonconforming use shall, to a material extent, be rendered more conforming to, and compatible with, the zoning district in which it is situated.*

CWA Comments: The most obvious recognizable and material benefit to the ultimate users of the project and the community is the preservation of significant open space, which includes woodland, wetland and steep slope preservation within the proposed development. It is likely without application of the PUD regulations this significant amount of open space would be reduced or nearly eliminated. As stated previous, the Planning Commission will need to affirm the proposed development meets one or more of the PUD eligibility criteria and find they commensurate with the number and size of the requested deviations needed for the project. The newly adopted Master plan provides eight 98) goals that if addressed can help to meet this criteria. The applicant should indicate how these goals can be met.

The applicant proposes the following public benefits as part of the project (Sheet 02):

- Approximately 71% open space with preservation of 33 acres of woodland/priority 3 bio-reserve.
- Recreational and social gathering opportunities on site including pedestrian pathways, pavilion, and play fields.
- Contribution to Township fire services (the specific amount of the contribution will need to be provided for Planning Commission's consideration as a community benefit of the project.

3. *The proposed type and density of use shall not result in an unreasonable increase in the need for or burden upon public services, facilities, roads, and utilities.*

CWA Comments: The density of the proposed residential portion of the development may be considered compatible with the Master Plan and surrounding uses and should not result in an unreasonable increase in the need for additional public facilities. However, additional information is needed in order to determine specific traffic impacts as 47 new homes will generate an average of 470 new vehicle trips per day. A traffic impact assessment has been provided as a part of the revised preliminary PUD site plan to be reviewed by the Washtenaw County Road Commission. Additionally, the applicant has provided the development will be served by a private community wastewater system and all water will be supplied by a community well. See our comments regarding these proposed facilities in the Essential Services section of this report.

4. *The proposed development shall be consistent with the public health, safety, and welfare of the township.*

CWA Comments: We understand a recent will test in the area revealed presence of 1.4 Dioxane potentially from the Gelman contamination area to the south. With the use of a community well for this development, the applicant should provide reviews from State and/or County officials that a community well will not cause additional spread of the contamination to this part of the Township. This is a significant issue to be addressed before this project moves to the final phase of review.

5. *The proposed development shall minimize any negative environmental impact of the subject site or surrounding land.*

CWA Comments: The applicant proposes to minimize negative environmental impacts primarily through a low-density development pattern and preservation of significant amounts of dedicated open space. Additionally, the stormwater management system includes implementation of best management practices throughout the site which include infiltration trench, naturalized infiltration/detention basins, and rear yard swales. As noted, the applicant should also consider preserving the entire bio-reserve area.

6. *The proposed development shall minimize any negative impact upon surrounding properties.*

CWA Comments: We note there are three (3) existing residential homes north of the site adjacent to Dexter-Ann Arbor Road. The closest (4179 Dexter-Ann Arbor Road) is located approximately 10 feet from the north property line of the development. The two (2) other adjacent existing homes are approximately 60 feet from the north property line. There is also an existing residential structure immediately to the east of the site with the home located approximately 30 feet from the east property line of the development. The applicant has noted the following with regard to the residential neighbors surrounding the property in their revised submittal:

> "The adjacent residential neighbors are single family residential lots, which is a use consistent with the proposed single family residential lots within the PUD. A 100-foot perimeter setback is proposed, which exceeds the 50-foot minimum setback that is required for a PUD. Additionally, landscape screening has been added to the site layout plan to minimize impacts to the adjacent residential properties."

7. *The proposed development shall be consistent with the goals and policies of the Township Master Plan.*

CWA Comments: Based on the information provided in the Master Plan section of this report, we feel the project is generally consistent with the goals and policies of the Township Master Plan but proposing the maximum density possible under the Master Plan.

Items to be Addressed: *The Planning Commission will need to affirm the proposed project meets the PUD eligibility criteria outlined in Section 36-245(c).*

PUD STANDARDS

The Planning Commission shall review the preliminary PUD plan according to the provisions of Section 36-245 through 36-248. Following a public hearing, the Planning Commission shall make a recommendation to the Township Board based upon its findings. In making its recommendation, the Planning Commission shall determine if the proposed PUD meets the intent of the PUD district and the following standards. Most of these criteria are addressed in the body of this review:

1. *In relation to underlying zoning, the proposed type and density of use shall not result in a material increase in the need for public services, facilities, and utilities, and shall not place a material burden upon the subject or surrounding land or property owners and occupants or the natural environment.*

2. *The proposed development shall be compatible with the Township Master Plan and shall be consistent with the intent and spirit of the PUD Ordinance.*

3. *The PUD shall not change the essential character of the surrounding area.*

4. *The proposed PUD shall be under single ownership or control such that there is a single person or entity having responsibility for completing the project in conformity with this Ordinance. This provision shall not prohibit a transfer of ownership or control upon due notice to the Zoning Administrator.*

Items to be Addressed: *Planning Commission to determine if the PUD meets the intent and outlined standards of the PUD district.*

MASTER PLAN

The Master Plan depicts the subject site and the surrounding area as Low Density Residential (LDR) future land use classification (1 dwelling unit per every 1 to 2.5 acres). The intent of the LDR future land use category is to accommodate relatively low density single-family residential housing in areas that are suitable for septic systems and water wells.

Desirable land uses and elements listed in the LDR future land use classification include single-family residences in either clustered or conventional subdivision/site condominium development; and parks, open spaces, and conservation areas. The A-1 General Agriculture and R-1 Single-Family zoning districts are compatible to the LDR future land use designation in the Master Plan. While the gross density proposed is compatible to the upper limits of the Township Master Pan, we have concerns how total density was determined as outlined in our comments on the PUD density Plan.

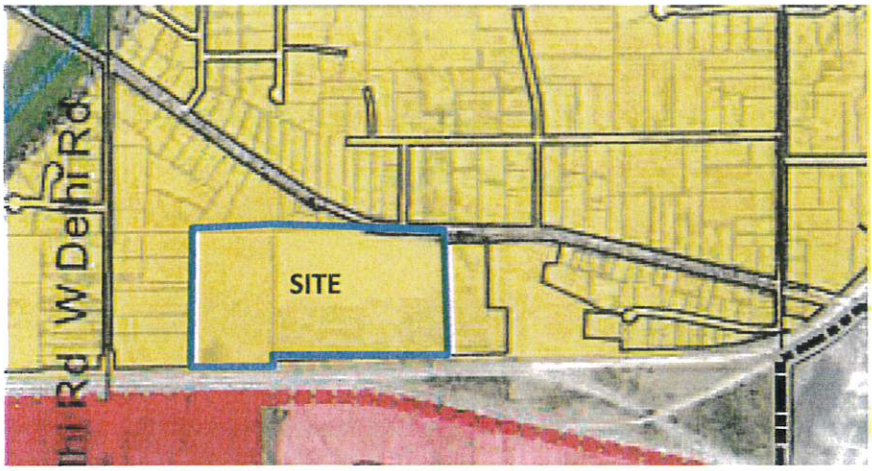

The site is also located within the Huron River Sub Area of the Township. The Master Plan outlines the following applicable development strategies and design guidelines for the Huron River Sub Area:

Development Strategies:

- Continue to plan for future residential growth by requiring clustered development.

- Promote the establishment of non-motorized routes to provide an interconnected system of trails along major roads connecting existing parks, neighborhoods, Township facilities, Mill Creek, the Huron River, and adjacent communities.

Design Guidelines:

- Encourage Low Impact Development (LID) techniques for storm water management.
- Maintain vegetation along roadways and enhance with additional plantings of native, trees, shrubs, grasses, and perennials.
- Carefully site entrance drives and subdivision entrances.
- Separate pedestrian ways from cars and provide pathways connecting subdivisions.

Based upon the information supplied by the applicant, and the above principals outlined in the Master Plan, we find the general concept of the development meets the goals and objectives reflected in the Scio Township Master Plan. However, as noted above, we have concerns about the proposed density of the development. The Master Plan outlines a range of density from one unit per 1 acre to one unit per 2.5 acres. The applicant is seeking the densest development – 1 unit per acre. (See additional comments related to the Master Plan in the body of this report.)

Items to be Addressed: *Calculation of total density.*

AREA, WIDTH, HEIGHT, SETBACKS

The PUD ordinance provides *all regulations applicable to front, side and rear yard setbacks shall be met in relation to each respective land use in the development based upon zoning district regulations in which the proposed use is listed as a permitted principal or conditional use* (§36.248.b). We find the R-1 zoning designation is in conformance with the Master Plan designation for this site.

The applicant outlines proposed deviations to the R-1 zoning requirements in the Site Data Comparison Chart on Sheet 02. The R-1 Single Family Residential district regulations are outlined below:

R-1, Single Family Residential

	Required	Provided	Compliance
Lot Area	1 acre	7,800 SF (35,760 SF Deviation)	Deviation Requested
Lot Width	150 feet	65 feet (85-foot Deviation)	Deviation Requested
Building Setbacks			
Front	50 feet	25 feet (25-foot Deviation)	Deviation Requested
Side	20 feet	10 feet (10-foot Deviation)	Deviation Requested
Rear	50 feet	25 feet (25-foot Deviation)	Deviation Requested
Maximum Lot Coverage	20%	35% (15% Deviation)	Deviation Requested
Maximum Floor Area	20%	65% (45% Deviation)	Deviation Requested
Building Height	2.5 stories / 35 feet	2.5 stories / 35 feet	Checked during Zoning Compliance

The developer is proposing a site condominium development where 47 lots will be individually owned. A 100-foot buffer setback is provided along the perimeter of the property.

The Planning Commission will need to consider the requested deviations as they relate to the underlying R-1 zoning classification and the recognizable and material benefit produced by the project for community (see more in Project Eligibility section Page 3). Specifically, do the benefits proposed warrant the zoning deviations proposed.

Items to be Addressed: *Planning Commission to consider requested deviations from R-1 zoning district standards.*

PROJECT DENSITY

The PUD ordinance states that, *the total number of dwelling units in a PUD project shall not exceed the number of dwelling units permitted in the underlying zoning districts or the density as proposed in the Township Master Plan. However, a density bonus of up to twenty-five percent (25%) shall be permitted if all of the following elements are included in the plan and a density bonus of up to fifteen percent (15%) if no less than two (2) of these elements are included* (§36.247(a)(1)):

1. *A high level of clustered development, where at least sixty percent (60%) of the PUD is left in open space as defined.*

   The applicant is proposing to preserve 70% (33 acres) as open space. This exceeds the 60% requirement. See the Open Space section of this report on Page 9 for additional information.

2. *Providing perimeter transition areas or greenbelts around all sides of the development that are at least one hundred (100) feet in depth.*

   A 100-foot buffer is demonstrated around all sides of the development. As noted above, there are several existing residential structures along the north and east sides of the proposed development that may require additional buffer/screening.

3. *The proposed site is designed to enhance surface water quality and ground water quality pursuant to Section 36-341, Stormwater Management and addresses at least 2 Best Management Practices (BMPs) of Section 36-75(12).*

   The applicant indicates in their narrative the site has been designed to meet all stormwater management requirements and provides for a minimum of two (2) BMPs on-site. Proposed BMPs include infiltration trench, naturalized infiltration/detention basins and rear yard swales.

   The Township Engineer and Washtenaw County Water Resource Commission will provide a full analysis of the proposed BMPs and the site's storm drainage system.

The revised parallel plan supplied in the proposal demonstrates developing the property under the provisions of the R-1 zoning district allotted for 38 lots – Sheet 20. However, we continue to question the viability of the proposed layout as there are three (3) open ended street connections to the east, west and north that have no potential for future connection. We understand the applicant is utilizing the t-turnaround option for emergency vehicles rather than cul-de-sacs; however, the private road design standards do not allow t-type turnarounds as an option for Class A private roads (Section 24-5(b)).

Further, the lots proposed in the southwestern corner are shown were the open water wetland (pond) is located. The allowable building area for these two (2) lots is radically reduced due to the open water wetland location.

The applicant states in their response letter provided with the revised plan submittal that "the zoning ordinance indicates that proposed density can be based upon the density of the future land use for the use for the site". However, Section 36-247(a)(2) specifically states:

> *For the calculation of the density on the site, including the possible density bonus, the applicant shall be required to submit a conventional (non-open space) layout using the underlying zoning classification [or future land use as allowed under (a)(1)] and applicable township regulations demonstrating a practical project.*

Based on these comments, we do not find the parallel plan as presented demonstrates a practical project for the subject parcel (Section 36-247(a)(2)).

Items to be Addressed: *1) Review of proposed stormwater improvements by the Township Engineer and the Washtenaw County Water Resource Commission (verify use of at least 2 BMPs). 2) Reconsideration of the parallel plan layout based on the underlying zoning classification and applicable Township regulations demonstrating a practical project for the subject parcel (Section 36-247(a)(2)).*

NATURAL RESOURCES

Topography: The site is undulating with steep slopes in the western portion of the site (to be preserved).

Woodlands: A tree removal plan and tree inventory have been provided as part of the Preliminary PUD Site Plan submittal – Sheets 9-12. All removal information has been noted on the plan and inventory as required; mitigation calculations are provided on Sheet 04. Protected and landmark trees will be required to be mitigated as required in Section 36-346.

Wetlands: An "open water pond" is located in the southwest corner of the site. The wetland is located within the portion of the site to be preserved.

Soils: The applicant provides the following soil types are present on the site:

- Boyer loamy sand, 6-12% slopes
- Owosso-Miami complex, 2-6% slopes
- Spinks loamy sand, 0-6% slopes
- Spinks-Oshtemo loamy sand, 0-6% slopes
- Wasepi sandy loam, 0-4% slopes
- Wawasee loam, 2-6% slopes
- Wawasee loam, 6-12% slopes

The map below demonstrates the on-site soils as they are rated for septic tank absorption fields. Yellow areas are equivalent to a "somewhat limited" rating meaning: *that the soil has features that are moderately favorable for the specified use. The limitations can be overcome or minimized by special*

planning, design, or installation. The red areas are considered "very limited" meaning: *the soil has one or more features that are unfavorable for the specified use The limitations generally cannot be overcome without major soil reclamation, special design, or expensive installation procedures. Poor performance and high maintenance can be expected".*

As demonstrated on the soil map below, it is unlikely the northeast corner of the site cannot be developed as shown in the parallel plan based on soil limitation associated with septic facilities.

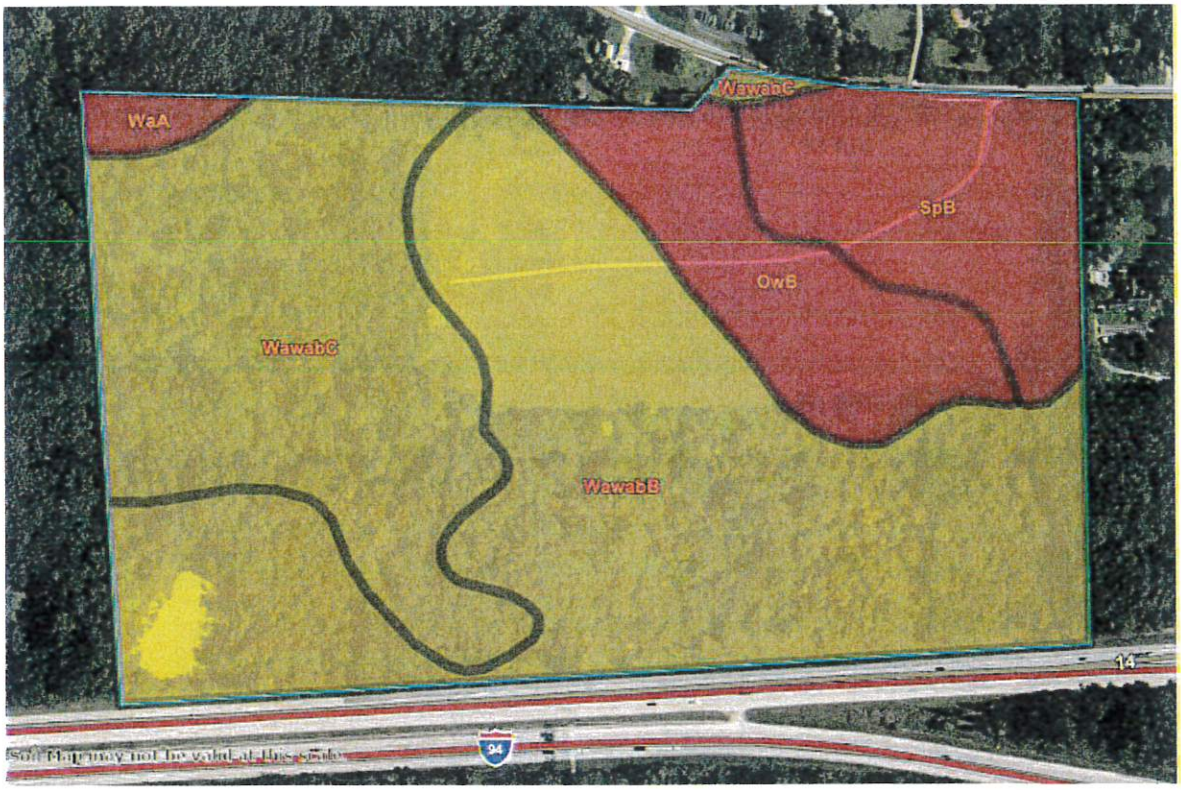

The applicant has provided a Phase I Environmental Site Assessment on the property conducted in October 2017. At that time, no contamination of the site was observed.

Items to be Addressed: *None.*

OPEN SPACE

Section 36-248(a) outlines the requirements for open spaces within PUD developments. Specifically, *when completed, the PUD shall have significant areas, but not less than thirty percent (30%) of total land area, devoted to open space, which shall remain in a natural state and/or be restricted for use for active and/or passive outdoor recreational purposes. Priority shall be on preserving the most important natural features on the site, as identified by a site analysis.*

Further open space is defined as:

Any parcel or area of land including wetland that is unimproved and set aside, dedicated, designated, or reserved for preservation purposes, and/or public or private use or enjoyment. In addition to unimproved areas, open space may also include the following:

1. *Stormwater detention or retention ponds and facilities meeting the Low Impact Design criteria of the Washtenaw County Water Resources Commission. In addition, to be considered open space all stormwater detention or retention ponds and facilities must be constructed using vegetation native to this area and in a way that appears to be a natural feature of the subject site.*

2. *Outdoor recreation facilities including but not limited to bike paths, trails, golf courses, community swimming pools, playgrounds, ball fields, court games, and picnic areas.*

3. *All buffer and greenbelt areas. Required setbacks for individual residential parcels shall not be included as open space.*

The applicant has provided for 30 acres (70%) of the site to be maintained as open space. In addition to the percentage requirement, and the priority to preserve the most important natural features found on site, where possible, additional open spaces should be located and designed to provide active recreation; informal recreation and pathways; natural greenbelts along roadways; and preserve existing natural buffers between adjacent land uses. The applicant has noted the community wastewater facility and community wastewater system building are not included in the open space calculations. The layout plan on Sheet 04.

As presented on the site plan, development will be limited to the northeast portion of the site where the site has been cultivated over the years. Woodland areas around the periphery of the site will be preserved. Walking paths are demonstrated around the periphery of the developed portion of the site with paths leading to the existing pavilion which is proposed to remain with enhancements. We note the pathways are demonstrated as 5-foot-wide mowed paths. The applicant should consider a more formalized pathway network.

All open spaces are required to be maintained in perpetuity. The Township Board will not approve the proposed PUD development until documents pertaining to the maintenance and preservation of open spaces, common landscaped areas and common recreational facilities has been provided.

Items to be Addressed: *1) Consider a more formalized pathway network than a mowed path. 2) Provide an open space maintenance agreement/contract during final site plan review.*

BUILDING LOCATION AND SITE ARRANGEMENT

The layout is intended to preserve the existing woodlands, wetland and steep slopes on the site. We noted previously, the 100-foot perimeter buffer has been utilized along all sides of the proposed developed areas.

As noted, we are concerned with the density and the number and extent of the deviations requested for the proposed development.

Items to be Addressed: *See other sections with concerns regarding project density and the number and extent of deviations being sought.*

SITE ACCESS AND CIRCULATION

The development will be accessed via a single access point from Dexter-Ann Arbor Road. No additional outlets/interconnectivity is proposed for vehicular traffic. Washtenaw County Road commission should provide input regarding the adequacy of the proposed point of access as the access point to the development is located a curve with an elevation change.

We note the proposed Dexter-Ann Arbor ROW is not shown on the plan depicting the future 120-foot ROW width. The applicant notes in their response letter that the existing and proposed boundary reflect a dimension that is greater than the future Dexter-Ann Arbor ROW.

Internal vehicular circulation will need to be reviewed by the Township Engineer and Fire Department. Additionally, the private road section provided on Sheet 04 demonstrates parallel parking will be accomplished on one side of the street. However, as provided the proposed private street does not meet the requirements of a Class A private road outlined in Section 24-5 of the Scio Township Codified Ordinances. The applicant has noted in their response letter they are also seeking relief from the Class A private road standards as a deviation in the PUD.

Emergency vehicle and garbage truck turning radii have been provided on Sheet 10.

Items to be Addressed: *1) Washtenaw County Road Commission review of access drive location. 2) Planning Commission to consider deviation from Class A private road standards.*

TRAFFIC IMPACT

A traffic impact study has been provided as part of the revised rezoning/preliminary site plan submittal. Due to potential impacts related to traffic, we recommend a traffic impact analysis be provided for review by the Washtenaw County Road Commission. We note that single-family residential homes generate approximately nine (9) vehicle trips daily each. With 47 proposed lots, an additional 400+ vehicle trips will be generated along Dexter-Ann Arbor Road daily.

The applicant has provided a Trip Generation and Left-Turn Lane Analysis as part of their revised PUD submittal. The analysis estimates the development will generate approximately 519 weekday trips, 38 AM peak hour trips, and 49 PM peak hour trips. Based on peak hour travel movements, the analysis determined that there is not a need for a left-turn lane on Dexter-Ann Arbor Road. This analysis will be studied further by the Township Engineer and Washtenaw County Road Commission.

Items to be Addressed: *Washtenaw County Road Commission review of traffic impact study.*

ESSENTIAL FACILITIES AND SERVICES

The subject site will be served with a community well and community wastewater system. Section 36-318 outlines specific requirements related to the operation and location of community wastewater facilities. Setbacks from these facilities include:

- 200 feet from the nearest dwelling located within a development served by the community wastewater system.

- 200 feet from a property line shared with an adjacent property (above and below grade – as noted in the Community Wastewater Utility System definition (Section 34-193 - *The system shall include any individual septic tanks pumps, lines and appurtenances serving each dwelling unit or structure in addition to facilities, sewers and appurtenances that serve more than one dwelling unit or structure*).
- 1,500 feet from another approved community wastewater utility system (point of discharge).
- 2,000 feet from an established public wellhead protection area (point of discharge).
- 200 feet from a wetland (point of discharge).
- 200 feet from the ordinary high-water mark of any body of water.

The applicant has provided a depiction of the community wastewater facility isolation distances on Sheet 05. It is further provided in the response letter, "the M-14/I-94 ROW to the south of the site...does not qualify as an 'adjacent property'. We agree, and therefore the requirement of 200-foot separation from property lines to adjacent properties is met."

Further, all operations shall be enclosed by a fence not less than six (6) feet high. While details of the proposed community wastewater system would typically be reviewed during final PUD site plan, Planning Commission may request additional information as part of PUD consideration.

We defer technical review of on-site utilities to the Washtenaw County Environmental Health Division, the Township Engineer, and the Township Utility Director. This includes State and/or County consideration of the community well and a determination it will not cause additional spread of the Dioxane contamination in this area.

Items to be Addressed: *1) Review of community wastewater system details during final PUD plan review. 2) Review of essential facilities and services by the Washtenaw County Environmental Health Division, Township Engineer, and Township Utility Director. 3) State and/or County review of the community well and potential spread of Dioxane contamination.*

SAFETY PATHS/SIDEWALKS

Internal sidewalks are provided along both sides of all internal streets. Safety paths are not developed or planned along Dexter-Ann Arbor Road.

Items to be Addressed: *None.*

RECOMMENDATIONS

Based upon the information provided, we recommend the following items be addressed to the satisfaction of the Planning Commission prior to Preliminary PUD / Rezoning approval:

1. The Planning Commission will need to affirm the proposed project meets the PUD eligibility criteria outlined in Section 36-245(c).
2. Planning Commission to determine if the PUD meets the intent and outlined standards of the PUD district.
3. Calculation of total density.

4. Planning Commission to consider requested deviations from R-1 zoning district standards.
5. Review of proposed stormwater improvements by the Township Engineer and the Washtenaw County Water Resource Commission (verify use of at least 2 BMPs).
6. Reconsideration of the parallel plan layout based on the underlying zoning classification and applicable Township regulations demonstrating a practical project for the subject parcel (Section 36-247(a)(2)).
7. Consider a more formalized pathway network than a mowed path
8. Washtenaw County Road Commission review of access drive location.
9. Planning Commission to consider deviation from Class A private road standards.
10. Washtenaw County Road Commission review of traffic impact study.
11. Review of essential facilities and services by the Washtenaw County Environmental Health Division, Township Engineer, and Township Utility Director.

The following items will be required to be addressed during final site plan review:

1. Provide an open space maintenance agreement/contract during final site plan review.
2. Review of community wastewater system details during final PUD plan review.
3. Provide floor plans, building elevations and samples of proposed exterior materials at Final PUD.

CARLISLE/WORTMAN ASSOC., INC.
Douglas J. Lewan, AICP
Executive Vice President

CARLISLE/WORTMAN ASSOC., INC.
Laura K. Kreps, AICP
Senior Associate

124-2140

cc: Norfolk Development – Jim Haeussler via jhaeussler@norfolk-homes.com
Matt Parks, OHM
Sally Bos, OHM
Stacie Serder, OHM

November 23, 2021

Scio Township, Michigan
827 N. Zeeb Road
Ann Arbor, MI 48103

GENERAL INFORMATION

Application No:	PUD #21005		
Applicant:	Norfolk Development Corporation		
Project Name:	3991 Dexter-Ann Arbor Rd		
Plan Date:	August 27, 2021	Revision Date:	November 5, 2021
Location:	3991 Dexter-Ann Arbor Rd		
Parcel ID:	H-08-23-300-001, -002		
Action Requested:	Preliminary PUD Approval		

We have completed the second Preliminary PUD/Preliminary Site Plan Review of the plans dated August 27, 2021, with a latest revision date of November 5, 2021, and stamped received by OHM Advisors on November 9, 2021.

A brief description of the project has been provided below, followed by our comments and a list of anticipated required permits and approvals. At this time, the plans are recommended for approval and placement on the next available Scio Township Planning Commission meeting agenda, contingent on the following comments being addressed prior to the next plan submittal.

A list of both PUD and preliminary site plan comments have been provided for the applicant's consideration and shall be addressed prior to resubmittal. Final site plan/detailed engineering comments were not provided due to the preliminary nature of the proposed PUD.

PROJECT AND SITE DESCRIPTION

The applicant is proposing a 47-unit site condominium on a 46-acre site located on Dexter-Ann Arbor Road. Approximately 70% of the site will be preserved as open space, including the preservation of existing woodland, landmark trees, and open water wetland.

The proposed development will be serviced by a community wastewater system and an on-site well. Three (3) stormwater detention basins are being proposed, as well as an underground stormwater conveyance system, to capture the proposed stormwater runoff.

PLANNED UNIT DEVELOPMENT (PUD) COMMENTS

1. The applicant shall note that due to the Gelman plume and recent private well test results, the proposed community well will need to be further studied and evaluated to determine what impact this development will have on the groundwater flow in the area. A hydrologic study shall be performed and reviewed by both the County Health Department and this office prior to approval.

Sincerely,
OHM Advisors,

Sally L. Bos, P.E.

Stacie L. Serdar

SLB/SLS

cc: Steve Wyzgoski, Township Utilities Director
Rich Hughes, Township Field Utilities Supervisor
Will Hathaway, Township Supervisor
Frances Szuma, Township Planning Coordinator
Kristy Aiken, Township Office Coordinator
Jessica Flintoft, Township Clerk
Andrew Houde, Township Fire Chief
Doug Armstrong, Township Assistant Fire Chief
Doug Lewan, CWA, Township Planner
Laura Kreps, CWA, Township Planner
Theresa Marsik, P.E., WCWRC
Gary Streight, P.E., WCRC
Jim Haeussler, Applicant, Norfolk Development Corporation
Tom Covert, P.E., Midwestern Consulting, LLC
Tina Fix, RLA, Midwestern Consulting, LLC
File

P:\0126_0165\SITE_ScioTwp\2021\0159211100_Knights of Columbus (3991 Dexter-AA)_MUNI\01_PUD-PSP\PUD-PSP#2\Knights of Columbus_PUD-PSP#2_2021-11-23.docx

November 23, 2021

Scio Township, Michigan
827 N. Zeeb Road
Ann Arbor, MI 48103

GENERAL INFORMATION

Application No:	PUD #21005		
Applicant:	Norfolk Development Corporation		
Project Name:	3991 Dexter-Ann Arbor Rd		
Plan Date:	August 27, 2021	Revision Date:	November 5, 2021
Location:	3991 Dexter-Ann Arbor Rd		
Parcel ID:	H-08-23-300-001, -002		
Action Requested:	Preliminary PUD Approval		

We have completed the second Preliminary PUD/Preliminary Site Plan Review of the plans dated August 27, 2021, with a latest revision date of November 5, 2021, and stamped received by OHM Advisors on November 9, 2021.

A brief description of the project has been provided below, followed by our comments and a list of anticipated required permits and approvals. At this time, the plans are recommended for approval and placement on the next available Scio Township Planning Commission meeting agenda, contingent on the following comments being addressed prior to the next plan submittal.

A list of both PUD and preliminary site plan comments have been provided for the applicant's consideration and shall be addressed prior to resubmittal. Final site plan/detailed engineering comments were not provided due to the preliminary nature of the proposed PUD.

PROJECT AND SITE DESCRIPTION

The applicant is proposing a 47-unit site condominium on a 46-acre site located on Dexter-Ann Arbor Road. Approximately 70% of the site will be preserved as open space, including the preservation of existing woodland, landmark trees, and open water wetland.

The proposed development will be serviced by a community wastewater system and an on-site well. Three (3) stormwater detention basins are being proposed, as well as an underground stormwater conveyance system, to capture the proposed stormwater runoff.

PLANNED UNIT DEVELOPMENT (PUD) COMMENTS

1. The applicant shall note that due to the Gelman plume and recent private well test results, the proposed community well will need to be further studied and evaluated to determine what impact this development will have on the groundwater flow in the area. A hydrologic study shall be performed and reviewed by both the County Health Department and this office prior to approval.

OHM Advisors
34000 PLYMOUTH ROAD
LIVONIA, MICHIGAN 48150
T 734.522.6711
F 734.522.6427
OHM-Advisors.com

2. We defer discussion, negotiation, and approval of the proposed public benefits to the Township Staff, Township Planning Commission, and Township Board of Trustees. We recommend that our office be involved in the review of any portions of the PUD Agreement that relate to infrastructure improvements or contributions relating to off-site improvements.

3. The applicant provided a Traffic Trip Generation Memo and stated in their response letter, dated November 5, 2021, that the trip generation numbers for the proposed development did not warrant a full Traffic Impact Study or the inclusion of a turn lane. This office defers to the Washtenaw County Road Commission (WCRC) on the review and approval of this information.

4. This office defers to the Scio Township Fire Department on the review and approval of the parallel plan regarding site accessibility.

PRELIMINARY SITE PLAN (PSP) COMMENTS

SITE UTILITIES

1. The applicant noted in their response letter, dated November 5, 2021, that the following regarding the proposed Community Wastewater Utility System (CWUS) will be addressed during the final PUD review; however, they shall be addressed as part of the preliminary site plan review:
    a. Provide a preliminary layout plan for all CWUS components, both above ground and below ground. The Township will require adequate screening to be provided around all proposed above ground or partially above ground components.
    b. The Washtenaw County Department of Public Health (WCDPH) will need to review and provide preliminary comments prior to the Planning Commission recommending approval of the plans.

REQUIRED PERMITS & APPROVALS

The following outside agency reviews and permits will be required for the project. Copies of any correspondence between the applicant and the review agencies, as well as the permit or waiver, shall be sent to both the Township and this office.

- **Scio Township Board of Trustees (BOT):** After approval of the preliminary PUD/PSP by the Township Planning Commission (PC) and Township Board of Trustees (BOT), detailed engineering/final PUD drawings are required and approvals from all applicable agencies will be required prior to final PUD approval by both the PC and the BOT.
- **Scio Township Fire Department:** Review and approval is required.
- **Scio Township Planning Consultant:** All comments presented in the October 6, 2021, or most recent, review letter shall be addressed prior to resubmittal.
- **Washtenaw County Road Commission (WCRC):** Review and approval is required. Permits may be required for both the connection to Dexter-Ann Arbor Road as well as the stormwater outlet to the Dexter-Ann Arbor Road Right-of-Way (ROW).
- **Washtenaw County Water Resources Commissioner's Office (WCWRC):** All comments presented in the September 22, 2021, or most recent, review letter shall be addressed prior to resubmittal.
- **Washtenaw County Department of Public Health (WCDPH):** Review, approval, and permitting of the on-site community well and wastewater systems will be required.
- **Washtenaw County SESC:** A permit will be required prior to construction.
- **Michigan Department of Environment, Great Lakes, and Energy (EGLE):** Review, approval, and permitting of the on-site community wastewater system will be required.
- **Michigan Department of Transportation (MDOT):** Review and approval of the proposed wastewater treatment plant and drain field(s) may be required.
- Other permits/approvals/etc. may be required.

It is noted that additional comments may be generated from information presented in future submittals. If you have any questions, please contact us at (734) 522-6711.

Sincerely,
OHM Advisors,

Sally L. Bos, P.E.

Stacie L. Serdar

SLB/SLS

cc: Steve Wyzgoski, Township Utilities Director
Rich Hughes, Township Field Utilities Supervisor
Will Hathaway, Township Supervisor
Frances Szuma, Township Planning Coordinator
Kristy Aiken, Township Office Coordinator
Jessica Flintoft, Township Clerk
Andrew Houde, Township Fire Chief
Doug Armstrong, Township Assistant Fire Chief
Doug Lewan, CWA, Township Planner
Laura Kreps, CWA, Township Planner
Theresa Marsik, P.E., WCWRC
Gary Streight, P.E., WCRC
Jim Haeussler, Applicant, Norfolk Development Corporation
Tom Covert, P.E., Midwestern Consulting, LLC
Tina Fix, RLA, Midwestern Consulting, LLC
File

P:\0126_0165\SITE_ScioTwp\2021\0159211100_Knights of Columbus (3991 Dexter-AA)_MUNI\01_PUD-PSP\PUD-PSP#2\Knights of Columbus_PUD-PSP#2_2021-11-23.docx

Frances Szuma

From: Jacqueline Courteau
Sent: Wednesday, November 03, 2021 3:04 PM
To: Planning Commission
Subject: Ex parte communication regarding KoC site

Dear Planning Commission members,

I met with Margaret Engle, with whom I worked with as a colleague through the LPC, to discuss some township matters, and in the course of our conversation, she expressed several concerns about the KoC site. Although the points that she made to me are mostly the same that she had outlined in the letter she submitted to the full Commission before the public hearing at our last meeting, I wanted to report this conversation, since she neighbors the site, and this might be considered an "ex parte communication."

Margaret expressed the following concerns:

1. Potential for the community well (large-scale pumping) and community wastewater treatment (large-scale underground injection of treated water) to affect movement of the Gelman 1,4-dioxane contamination plume, in ways that could lead to contamination of neighboring wells as water is either pushed or pulled through various aquifer layers.
2. The traffic volume to be generated by a project of this size will pose a safety hazard and will affect the rural look and feel of the road, a historic viewscape that many residents and commuters enjoy.
3. Marketability of units like this could be problematic (her view based on traffic noise, checking out the similar development mentioned by the applicants, and overall building in the area)--and if there isn't a market, this could be a boondoggle for Scio.
4. Whether there might be additional environmental issues on the site (with some hearsay that there might at one time have been an informal dump there), and how the site will be assessed for contamination to ensure that nothing is spread during construction.

I encouraged Margaret to continue to communicate her concerns to Doug Lewan and/or the full Planning Commission and/or Board of Trustees.

Regards, Jacqueline

Frances Szuma

From: Jan Culbertson <jculbertson@a3c.com>
Sent: Monday, November 08, 2021 9:09 AM
To: Planning Commission
Subject: FW: More comments and questions on KOC rezoning
Attachments: Engle letter KOC Nov 7.docx

Jan Culbertson, FAIA, LEED BD+C
Senior Principal
A3C – COLLABORATIVE ARCHITECTURE

From: Margaret Engle <maengle@comcast.net>
Sent: Sunday, November 7, 2021 4:17 PM
To: Jan Culbertson <jculbertson@a3c.com>
Cc: 'Jacqueline Courteau' <JCourteau@ScioTownship.org>
Subject: More comments and questions on KOC rezoning

Dear Jan,
I apologize for the late message. I'd hoped to attend the next Planning Commission meeting, but I am scheduled to receive my booster in the evening.
I've been working to gather information on the KOC property. In lieu of speaking at the meeting, I've attached a letter outlining a number of questions and concerns.
Best regards,
Margaret

Margaret Engle

Via email maengle@comcast.net

Jan Culbertson (via email)

Scio Township Planning Commission

827 N Zeeb Rd.

Ann Arbor, MI 48103

November 7, 2021

Dear Commissioners:

In a previous letter, my husband and I raised objections to the KOC property rezoning proposition. In the intervening weeks, I have tried to understand more about this project and this property, researching its history and meeting with a number of people in person and on the phone. The results are troubling, to put it mildly, and raise a number of questions I hope the planning commission will consider.

In looking at the history, I discovered a bit more about possible toxic pollution on this site. In June 2006, Ann Arbor Parks agreed to acquire the KOC property as part of the Greenbelt program. They signed a purchase agreement with Columbus Home Co. to buy the property for $1.75 million; Scio was to contribute $250,000. The project hung in limbo for three years, before it was dropped around August 2009 and Ann Arbor Parks was released from the agreement.

All of the parties involved had been required to sign a non-disclosure agreement. As Scio LPC consultant Barry Lonik explained to me, under the NDA, all parties agreed to share information among themselves, but not with the public. However, the reason the deal was dropped was not adequately explained to Scio; specifically, the environmental site assessments were not provided. I have heard various rumors—arsenic poisoning? an illegal dump site? But it was a long time ago. Memories are fuzzy and records are not easily accessible. There may be a more prosaic explanation, nevertheless, this episode raises questions:

- Is this property contaminated?
- If it is contaminated, is it appropriate for a housing development?
- How would contamination affect the already questionable marketability?

I have FOIAed the information and am waiting to hear back this week. I will be happy to share the results with you.

Gelman Plume

The main issue I am concerned about is the spread of the Gelman plume posed by any development on this property. To try to get a better handle on the issue, I attended the November 2 meeting of Coalition for Action on Remediation of Dioxane (CARD). At the meeting, Roger Rayle reported on the KOC project, noting its proximity to the plume. He was not alone in expressing concern.

As you know from the email Mr. Rayle sent to the planning commission before the Oct. 11 meeting (and later shared with me), dioxane has been detected and is *rising* on Elizabeth Road, one-third of a mile from the KOC site--less than 2,000 feet. Moreover, one of the EGLE models for dioxane *points toward the*

KOC property (emphasis added). As Mr. Rayle noted in a phone call with me, it is not just the extraction of large volumes of water that can affect underground water dynamics, but also the discharge of wastewater back into the ground.

The nearby contamination has been known for some time. Dan Bicknell, a young grad students in the '80s, first discovered the Gelman dioxane pollution. Consider this five-year-old quote from Mr. Bickell in "Bearing witness: Decades of dioxane," (*The Ann*, March 1, 2016, http://www.theannmag.com/bearing-witness-decades-of-dioxane/):

> "People on Elizabeth Road are drinking dioxane now," Dan Bicknell says, "and have been doing so for a number of years. It's 2-4 parts per billion. EPA standard is 3.5. The state's done nothing about it."

As I said earlier, these are troubling issues. Here are my questions:

- Was the Gelman plume ever considered as factor in the creation of Scio Township's new **Master Plan** that would allow rezoning from R-C to low density housing on the KOC property?
- How will development of the KOC property—whether it is a PUD or dozens of individual wells and septic systems—affect the flow of the plume in this area (let's say roughly from Wagner-Elizabeth, along Dexter-Ann Arbor to West Delhi), where virtually every house is on a well?
- Can the Township or developers assure the safety of the wells, both those of existing homeowners and potential homebuyers on the KOC site, now and in the future?
- Will a bond be posted by the builder to provide city or township water in case of contamination?
- 1,4 dioxane has a half-life of up to 50 years. Will long-term monitoring be necessary to insure safety? Who will be responsible for monitoring—the State, Township, homeowners?
- Would a homeowners' association be liable for any future contamination if their water extraction and wastewater discharge affected the plume flow?
- Were the other intervenors in the Gelman suit notified, consulted, or given a chance to weigh in on the KOC project?
- Has Norfolk Homes in any way addressed the issue of 1,4 dioxane or has Scio Township raised the issue with the company? If so, what was their response?
- What efforts has Scio Township made to communicate with the large swath of potentially affected homeowners? Will the Township raise the issue on Scio's web site or in its newsletter? Does the Township plan to convene a town meeting?

In short, there is still much that needs to be learned. I hope that you will provide thoughtful consideration and answers to my questions.

Sincerely,

Margaret Engle

Margaret Engle and Gavin Clabaugh
3940 Dexter-Ann Arbor Road
Ann Arbor, MI 48103
maengle@comcast.net

Scio Township Planning Commission
827 N Zeeb Rd, Ann Arbor, MI 48103
Via Email to Chair Culbertson
October 8, 2021

Dear Commissioner Culbertson:

My husband and I are writing to express our strong objection to the proposed rezoning of the Knights of Columbus (KOC) field and adjacent property on Dexter-Ann Arbor Road from its current status of Recreation-Conservation (RC) to Planned Unit Development (PUD). We are nearby residents.

We moved here in 1997 and have since carefully tended this house and the land, creating a home we cherish to share with friends, family, and an array of wildlife. Now this proposed KOC development threatens the *quiet enjoyment* of our property.

We are concerned about a number of aspects, outlined below.

Traffic

There are lovely things about Dexter-Ann Arbor Road. It actually follows an ancient Pottawatomi trail that pre-dates European arrival. From Wagner to nearly the Knights of Columbus field, it is lined with large evergreen and deciduous trees, including many handsome old oaks. These create a sort of tunnel-of-trees effect which is a delight, particularly at this time of year.

There are less romantic aspects, too. This neighborhood has a walk score of *one*.
https://www.walkscore.com/score/dexter-ann-arbor-rd-and-w-delhi-rd-washtenaw-mi-48103

You need a car to live here. The proposed 47-unit PUD will likely mean 94 cars. Each household in the PUD would generate about 10 trips per day, according to Scio's planning consultant, Mr. Lewan. Rounding slightly up, that's another 500 automobiles to contend with here each day.

It's not just the immediate neighbors here who would have to deal with the extra traffic. According to the Washtenaw County Road Commission, Dexter-Ann Arbor already has to handle an average of 6,492 cars per day west of Wagner. These thousands of people would be affected. It addition, the increased traffic would undermine Scio's non-motorized transportation efforts as this route is frequently used by bicyclists.

Drivers enjoy Dexter-Ann Arbor, a prettier and easier route than Jackson, but they tend to treat it like the country road it always has been. The particular stretch of road at KOC is especially tricky, because of the steep hill and slight curve to the east of the KOC property and the modest hill and significant curve just to the west of KOC field.

Let me give you a few examples. A few years after we moved here, two off-duty first responders were killed when their car hit a tree just past the eastern edge of the KOC field. According to my former neighbor, a teen was killed some years earlier near the curve at KOC's western edge. In 2015, we were returning from an event-free road trip to move Gavin's elderly mother here from Colorado. Arriving in

front of our house, as we waited for oncoming traffic to clear so we could turn into the driveway, we were rear-ended by a driver who did not break and was traveling at the full 45 MPH speed limit. We had rented an SUV for the move and were fairly well protected, but the other driver's car was totaled.

Water Supply and Contamination Issues

All the homes in this area are serviced by private wells and septic fields. As a society, we recognize that water is a finite resource to be protected in general, but those of us who depend on private wells feel this even more keenly since our homes would be essentially unlivable without well water.

What effect would a super-well for 47 households have on the ground sources of water for the surrounding area?

The Gelman plume has affected some wells on Elizabeth St., which I believe borders (or is at least very close to) the KOC property on the SE side. Would the proposed super-well suck more 1,4 Dioxane-tainted water into our water source?

The KOC property was reportedly rejected as a site for school sports because of arsenic contamination. Is this contamination superficial? If so, will it be safely removed without endangering neighbors and wildlife? Is it deeper and naturally-occurring in the well water? If so, will that proposed super-well stir up arsenic in our aquifer? Would their massive septic system likewise pose a threat?

Undermining Trust in Government

After receiving the mailed notice regarding the change of zoning status, I checked the plans at the township hall and came away totally blind-sided. In 1997, before we bought our house, we checked with the township: this area was zoned recreation-conservation. When we started to see more development in general, around the time Meijer was built, I called the township and spoke at length with someone in planning. Development such as higher-density housing, I was told, would be centered along the Jackson corridor, not Dexter-Ann Arbor or similar roads. When the KOC for-sale sign went up several years ago, I called Doug Lewan and he explained that, according to the master plan, the area could be slated for low-density residential development but only after re-zoning from RC, which was not a given. In the case of re-zoning, homes might be permitted though any building would be low density: a limited number of houses in keeping with the tenor of the existing neighborhood. When the new master plan came out, we checked online and there was essentially no change—this area is still zoned RC, with a possible LD single-family housing. How does this proposed PUD fit that? We trusted that Scio Township had our backs. This feels like a betrayal.

I understand that statute only requires a property owners within a certain distance to be notified by mail. Wider published noticed is also required. According to the paperwork on file with the township, the two notices were either not easily accessible or in a newspaper that is not distributed in the area most affected by this proposed development. The *Washtenaw County Legal News* requires a paid subscription. I checked the *Legal News* public site on 10/5/21 and 10/6/21 and was unable to locate the notice using basic logical search terms. The Dexter *Sun Times* is a free weekly, but, within Scio, it is only delivered to homes in the Dexter school district. This part of the township is in the Ann Arbor school district. We don't get the *Sun Times* here.

This is not adequate public notice. The end effect is as if deals are being done out of sight and sprung on the tax-paying public at the last minute. We received the mailing just 10 days before your planning meeting. When I checked the township's paperwork, I saw this proposal had been bubbling along for months. What meetings and discussions have already taken place regarding this property? Why are residents—taxpayers—always the last to know?

The township needs to find more effective ways to reach its residents earlier in the process and more extensively.

Wildlife

I am always struck by land along I-94 stretching from Wagner almost to Zeeb. There are big parcels, with few houses, open space (KOC), scrubby forests, and wetlands. It's not that attractive for development, especially because of the highway proximity and noise, but it is a pretty decent little wildlife corridor. Small mammals, ground nesting birds, turkeys, deer all have a home here. Songbirds, raptors, and woodpeckers abound. The wildlife is a big part of what makes living in Scio so wonderful.

Do we have to gobble up every bit of land and make it uninhabitable for other species? We are in trouble and every inch and action counts. As detailed in such publications as *Science Advances,* "Accelerated modern human–induced species losses: Entering the sixth mass extinction" (abstract):

> [E]stimates reveal an exceptionally rapid loss of biodiversity over the last few centuries, indicating that a sixth mass extinction is already under way. Averting a dramatic decay of biodiversity and the subsequent loss of ecosystem services is still possible through intensified conservation efforts, but that window of opportunity is rapidly closing.

Destruction of Established Neighborhood and Non-viability of the Proposed PUD

A townhouse development would irrevocably change the character of this long-established community. This is a funky little sort-of neighborhood, an oddball assortment of homes, many dating from the 1940s and '50s and including some landmark historic homes. Old-timers have stories of when the Knights of Columbus Park, as it was known, hosted small festivals and Native American powwows. I'd very much like to know how turning what was once a neighborhood's park into a townhouse development on a dangerous stretch of country road presents any sort of the *public benefit* required for a PUD.

Moreover, the I-94 noise issue (not to mention the contamination) raises serious doubts about the overall viability of the proposed PUD project. The KOC property has sat on the market for *years,* likely because of the highway proximity and loud noise. If developers didn't jump on it, how many potential homebuyers will? One nightmare scenario is that the land is ripped up, built upon, and then the structures sit unsold and empty.

Starting such a questionable project in the current climate of social-political-economic instability is a huge concern. What recourse would the township or residents have if the project is begun, half built, and abandoned? The proposed developer's record is problematic. He led a company responsible for an abandoned half-built hotel in Saline, a project apparently now in need of hundreds of thousands of dollars for completion. (In speaking with people at the township hall, this was characterized to me as a pandemic-related business failure, but the project was marred by problems long pre-dating Covid-19, including failure to pay vendors and subcontractors.)

https://www.mlive.com/news/ann-arbor/2021/07/half-built-best-western-in-saline-could-be-auctioned-to-new-developers.html

Clearly, the BOT and commissioners have to balance economic interests. However, to insure a solid and prosperous future for Scio, we need smart development. Poorly conceived ventures rob us of that healthy, sustainable future. This is the wrong project for this site. Decisions here could negatively affect a lot of longtime residents, and, as we all learned with Gelman, once damage is done, it is not easily undone. We hope the Scio Planning Commission will carefully consider what happens next with these parcels of land.

Sincerely,

Margaret Engle and Gavin Clabaugh

MIDWESTERN CONSULTING

3815 Plaza Drive
Ann Arbor, Michigan 48108
734.995.0200

Land Development • Land Surveying • Municipal • Wireless Communications • Institutional • Transportation • Landfill Services

November 5, 2021

Scio Township
875 N. Zeeb Road
Ann Arbor, Michigan 48103

Attn: Mr. Will Hathaway – Township Supervisor

Re: 3991 Dexter-Ann Arbor Road PUD
Preliminary PUD
Midwestern File No.: 17310A

Dear Mr. Hathaway:

Midwestern Consulting has previously submitted site plans for review for the 3991 Dexter-Ann Arbor Road PUD, and has received comments from Carlisle Wortman Associates, OHM, and the Washtenaw County Water Resource Commissioner's Office. We have revised the plans to incorporate the requested changes, and offer the following as a response to the comments and description of changes.

OHM – Sally L. Bos – 9/21/21

Planned Unit Development Comments

1. The applicant shall clearly identify the proposed public benefits to be provided as part of the PUD re-zoning. We defer discussion, negotiation, and approval of the proposed public benefits to the Township Staff, Township Planning Commission, and Township Board of Trustees. We recommend that our office be involved in the review of any portions of the PUD Agreement that relate to infrastructure improvements or contributions relating to off-site improvements.
   Please refer to the Project narrative page of the plan set for details on public benefits proposed with the Planned Unit Development.

2. The applicant shall provide a Traffic Impact Study (TIS) for the proposed site. A copy of the TIS shall be submitted to both this office and the Washtenaw County Road Commission (WCRC) for review and approval. All proposed improvements shall be shown on the plans for review.
   A copy of the Traffic Trip Generation Memo has been submitted. Additionally, excerpts are located on the Project narrative page of the plan set. The trip generation numbers for the development did not warrant a full traffic impact study, nor the inclusion of a turn lane.

3. The applicant shall address the following regarding the provided Parallel Plan:

   a. It is noted on the Parallel Plan that underground storm water management is assumed; however, the applicant shall provide the storm water management system on the plans, as required by the Washtenaw County Water Resources Commissioner's Standards, as well as Township Ordinance. Storm water management including, but not limited to, pretreatment, infiltration, and detention, would still be required for the parallel plan if constructed.
      Underground storm water management beneath the roads is proposed for the parallel plan. Conceptual locations have been added to the plan.

b. Provide the location of the proposed community/individual wells and the WWTP/individual septic systems on the plans.
Individual wells and septic systems are proposed as a solution for the homes on the parallel plan and have been denoted.

c. Provide cul-de-sac or other turnarounds on the plans for site accessibility. We defer to the Scio Township Fire Department on the review and approval of the parallel plan regarding site accessibility.
The t-turnaround pavement line work has been added to the parallel plan. It is anticipated that the intersections would be utilized as a turnaround.

Preliminary Site Plan Comments:
Site Utilities:

1. The applicant shall address the following regarding the proposed Community Wastewater Utility System (CWUS):

   a. Provide a preliminary sanitary sewer basis of design.
   The preliminary sanitary sewer basis of design has been added to the Utility Plan.

   b. Provide a preliminary layout plan for all CWUS components, both above ground and below ground. The Township will require adequate screening to be provided around all proposed above ground or partially above ground components.
   The system will be designed after receiving preliminary PUD approval and will follow state guidelines and requirements. A screening fence has been added to the layout plan.

   c. The Washtenaw County Department of Public Health (WCDPH) will need to review and provide preliminary comments prior to the Planning Commission recommending approval of the plans.
   Noted, and will be provided at the time of the final PUD drawings and design are completed.

2. The applicant shall note that the proposed community well and water distribution system shall be privately owned and operated. The water distribution system shall also be constructed per Scio Township Standards.
Note added to sheet 05, the systems will be privately owned.

3. The applicant shall clarify if hydrants will be provided on the proposed water distribution system. This office defers to the Scio Township Fire Department on the review and approval of water accessibility.
Hydrants are not proposed for the development.

4. The applicant shall provide the preliminary sizes of the proposed water main and sanitary sewer systems.
Preliminary sizes of water main and sanitary sewer have been added to the Utility Plan.

5. The applicant shall overlay all proposed utilities on the landscape plan (Sheet 04). The applicant shall also provide the location of all proposed trees and other impactful landscaping on the plans.
The proposed utilities have been added to the layout and landscape plan and the proposed trees have been added.

Storm water Management

1. The applicant shall address the following regarding the storm water management calculations (Sheet 07) and revise all subsequent calculations accordingly:

   a. Provide the orifice calculations for the northwest detention basin.
   The calculations have been provided.

   b. Provide separate calculations for each northeast infiltration basin.

The calculations have been provided.

c. Verify the curve number for the grass soil Type A in the northeast infiltration basins.
Curve number has been revised.

d. Verify Worksheet 11 for the northeast infiltration basins.
Worksheet 11 has been revised.

e. Provide Worksheet 13 for the northeast infiltration basins.
Worksheet 13 has been revised.

f. Provide the outlet/orifice calculations for the northeast infiltration basins.
The calculations have been provided.

2. The applicant shall note that this is a known area of drainage concerns. It appears the proposed basins may not be adequately sized based on the existing concerns. The applicant shall verify the size of the proposed basins.
It is anticipated that the current design will achieve preliminary approval by the County. With this we would also note however that with the detailed design we would plan that the homes on lots 39 to 43 would direct their roof drainage to the lot frontage and the stormwater management system.

3. The applicant shall provide a preliminary drainage area map indicating which areas of the site will drain to which proposed detention basin. A detailed drainage area map, including acreages and C-factors for the site, that clearly shows what areas drain to each catch basin will be required as part of the detailed engineering/final PUD submittal. All C-factor calculations shall be provided on the plans.
All C-factor has been added for basins and trenches. Catch basin drainage areas will be issued with detailed engineering/final PUD submittal.

4. The applicant shall clearly indicate the emergency overflow route on the plans.
Overflow routes have been added to the Preliminary Storm water Drainage Plan.

5. The applicant shall also clarify how storm water will be directed to the proposed detention basin at the northwest corner of the site.
Drainage arrows have been added to the plan.

6. The applicant shall provide a Certificate of Outlet, signed and sealed by a licensed engineer in the State of Michigan, on the plans for the ultimate storm water outlet(s).
The Certificate of Outlet has been provided as a separate document and is also located on the Site Details sheet.

Site Layout

1. The applicant shall provide a turning template for the largest vehicle that will be accessing the site (fire truck, garbage truck, etc.) to ensure there is adequate space for maneuverability. The applicant shall also provide a standard detail, including dimensions, of the trucks.
The garbage and fire truck turning movements have been added to the Fire Protection and Solid Waste Plan.

Paving/Grading

1. The applicant shall clarify if the existing pavilion will be ADA accessible.
The existing pavilion will not be ADA accessible due to existing topography at the site.

2. The applicant shall provide preliminary cross-sections for the proposed roadways, sidewalks, mowed paths, etc. on the plans. It is recommended that a minimum of 4 inches of HMA is provided for the proposed roadways for ease of maintenance in the future.
The typical private road section is located on the layout and landscape plan. Additional details have been added to the Site Details sheet with regard to the 4" of HMA now being proposed.

General

1. The applicant shall include a photometric plan within the plan set. This office defers to the Township Planning Consultant on the review and approval of the photometric plan.
Street lights have been added to the layout and landscape plan and will be designed through the DTE direct lighting program. Street light cut sheets have been added to the Site Details sheet.

2. The applicant shall clarify how garbage collection will be handled within the development (individual pickup or community dumpster).
Garbage collection will be collected at individual lots, curb-side. Solid waste truck turning movements have been added to the Fire Protection and Solid Waste plan.

3. The applicant shall provide elevation views of all proposed buildings. We defer to the Township Planner for review and approval.
Sample housing typology elevations have been added to the Project Narrative sheet.

4. The applicant shall note that the plans shall be signed and sealed by a licensed engineer in the State of Michigan.
The plans have been signed and sealed by a licensed engineer.

Washtenaw County Water Resource Commissioner's Office – Theresa Marsik – 9/22/21

1. This site will be under the jurisdiction of the Washtenaw County Water Resources Commissioner. A mechanism to provide for the long-term operation and maintenance of the storm drainage facilities is required. This can be accomplished by the establishment of a county drain and drainage district under provisions of section 280.433 of the Michigan Drain Code. Additional information that will allow our office to draft the 433 Agreement will be requested of the design team once the design plans have been approved.
Noted.

2. The plans should be signed and sealed by a registered, professional engineer.
The plans have been signed and sealed by a licensed engineer.

3. Runoff calculations for the areas tributary to the proposed infiltration trench and rain garden must be provided to determine how much runoff is being directed to those BMPs.
Calculations have been provided. We have decided to remove the proposed rain garden from the design. Three BMP's have been proposed for the project (Detention basin Infiltration basins and Infiltration trenches).

4. The plans must include a detail of the proposed infiltration trench.
A detail has been provided on the site details sheet.

5. A storage volume chart for the infiltration basin and rain garden must be included in the plan set.
Full infiltration storage volumes have been added.

6. The curve numbers used on Worksheet W1 for the pervious cover areas correspond to a post-construction cover type of Meadow. The curve numbers should be revised to reflect the proposed

post-construction cover (Open Space, Good Condition).
Worksheet W1 has been revised.

7. The elevation at the bottom of the proposed northeast infiltration basins appears to be set at about Elevation 896 feet. Test pits TP-1 and TP-2, which were performed near the proposed northeast infiltration basins, were extended to approximately Elevation 895 and 894 feet, respectively. In order to use a soil layer for infiltration, the soil layer must be confirmed to be at least 3 feet thick. Soil borings are shown in the vicinity of the proposed basins on several plan sheets. Please provide the soil borings so that the soil layer thickness can be confirmed. If the soil layer thickness cannot be confirmed through review of the soil borings, additional field exploration may be required.
Additional soil borings have been added to the plans. Soil boring 2A confirms the soil layer extends below elevation 984.

8. A 6-inch interceptor layer of sand must be applied to the bottom of the infiltration basins to filter out sediment and debris. In addition, a maintainable engineered structure, such as an infiltration trench, must be placed in the bottom of the infiltration basin.
A 6-inch interceptor layer of sand have been designed, see detail sheet 13. The requested engineered structure "infiltration trench" shall be added to the design during detailed engineering.

9. Each rain garden inlet should include a sediment trap. A detail of the sediment trap should be included.
The rain garden has been removed from the design. Three other BMPs (Detention basin Infiltration basins and Infiltration trenches) have been proposed.

10. A long-term storm water maintenance plan, including budget and responsible party, should be designed and included with the plan set.
A maintenance plan has been provided.

Carlisle Wortman Associates, Inc. – Douglas J. Lewan & Laura K. Kreps – 10/08/21

1. Planning Commission to consider requested deviations from R-1 zoning district standards.
Please see the site data comparison chart on the Project narrative sheet of the plan set for detailed information regarding requested deviations. Note that the primary deviation is the size of the proposed lot, which inherently requires deviation from the lot width and setbacks. Further, we have added for comparison detail of a lot as approved within the Township which exhibits similar but smaller characteristics.

2. The Planning Commission will need to affirm the proposed project meets the PUD eligibility criteria outlined in Section 36-245(c).
Please refer to the Project Narratives sheet of the plan set that outlines the anticipated eligibility of the proposed Planned Unit Development. Additionally, a trip generation and left-turn analysis report has been provided. Community benefits have been outlined on the Project Narratives sheet.

3. Demonstrate location and preservation of the Priority 3 bio-reserve.
The limits of the Priority 3 Bio-reserve per the Scio Township Master Plan have been digitized onto the Existing Conditions Plan.

4. Demonstrate how impacts of the project will be mitigated for those immediate residential neighbors.
The adjacent residential neighbors are single family residential lots, which is a use consistent with the proposed single family residential lots within the PUD. A 100-foot perimeter setback is proposed, which exceeds the 50-foot minimum setback that is required for a PUD. Additionally, landscape screening

has been added to the site layout plan to minimize impacts to the adjacent residential properties.

5. Planning Commission to determine if the PUD meets the intent and outlined standards of the PUD district.
   Please refer to the Project Narratives sheet of the plan set that outlines the intent and standards of the PUD district and applicability to the proposed Planned Unit Development.

6. Calculation of total density.
   The PUD section of the zoning ordinance indicates that proposed density can be based upon the density of the future land use for the site, which is identified for up to 1 dwelling unit per acre. At 1 dwelling unit per acre, the parallel plan illustrates 38 lots (0.81 du/acre). With the permitted 25% density bonus, the proposed PUD is 1.01 dwelling units per acre. You will note there have been a number of additions to the parallel plan describing the viability of this plan even though this type of development is not desired when compared to the proposed PUD.

7. Review of proposed stormwater improvements by the Township Engineer and the Washtenaw County Water Resource Commission (verify use of at least 2 BMPs).
   Please refer above to responses to the review letters provided by OHM and WCWRC.

8. Reconsideration of the parallel plan layout based on the underlying zoning classification and applicable Township regulations demonstrating a practical project for the subject parcel (Section 36-247(a)(2)).
   The parallel plan has been revised to illustrate viability of the layout in more detail. This includes more detailed information on the location of potential houses, individual well and septic for each lot, storm water management, and pavement line work that includes the t-turnarounds.

9. Demonstrate tree removal on site plan.
   Tree removals and the proposed site layout, utilities, and grading are shown on the Tree Removal Plans at a scale of 1' = 50 feet. The removals are not noted on the 100 scale plan due to legibility concerns at that scale. Additionally, tree removals are noted in the Tree list.

10. Applicant to verify open space calculation based on open space definition provided in Section 36-5.
    The open space calculations meet the definition of open space provided in Section 36-5. The community wastewater facility and the community water system building are not included in the open space calculations. An open space hatch has been added to a Proposed Open Space detail on the layout plan.

11. Consider a more formalized pathway network than a mowed path.
    The pathway network will be a mowed path with wooden trail markers placed at a routine distance to maintain the line of visibility along the pathway.

12. Washtenaw County Road Commission review of access drive location.
    Noted. Plans have been submitted to WCRC for review.

13. Demonstrate Dexter-Ann Arbor Road's 120-foot future ROW width.
    The existing ROW width is 66ft with an additional exception noted as 2.5 rods in width (41.25'). The existing and proposed boundary reflect the 33ft ½' ROW and the 41.25' exception for a total of 74.75ft from centerline of Dexter-Ann Arbor Road, which exceeds the 60ft ½ ROW for the 120ft future ROW width.

14. Demonstrate proposed private roads will meet Class A private road standards outlined in Section 24-5 of the Scio Township Codified Ordinance.
    Please refer to the Typical Road Section on the layout and landscape plan. A deviation from the Class A private road standards is requested with the Planned Unit Development.

15. Provide emergency vehicle and garbage truck turning radii.
    Truck turning movements have been added to the Fire Protection and Solid Waste plan.

16. Provide traffic impact study for review by Washtenaw County Road Commission.
    The traffic trip generation memo has been provided to the WCRC for review.

17. Demonstrate all required setbacks listed in Section 36-318 and noted above can be met.
    Setback distances have been added to a detailed viewport on the Utility Plan. Based on review with Ms. Jaclyn Bates at the Washtenaw County Environmental Health Department, there are no known existing approved community wastewater facilities within 1,500ft of the proposed community wastewater facility. Additionally, the proposed facility is 50 feet from the M-14/I-94 ROW to the south of the site; which does not qualify as an "adjacent property". Therefore, the requirement of 200 foot separation from property lines with adjacent properties is met.

18. Review of essential facilities and services by the Washtenaw County Environmental Health Division, Township Engineer, and Township Utility Director.
    Noted.

Should you have any further concerns or have further questions, please feel free to contact Tom Covert by phone at 734-995-0200, or email at tjc@midwesternconsulting.com. We look forward to your feedback.

Sincerely,
MIDWESTERN CONSULTING, LLC

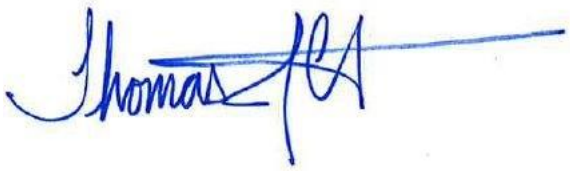

Thomas J. Covert, RLA, AICP
Principal

MIDWESTERN CONSULTING

3815 Plaza Drive
Ann Arbor, Michigan 48108
734.995.0200

Land Development • Land Surveying • Municipal • Wireless Communications • Institutional • Transportation • Landfill Services

ENGINEER'S CERTIFICATE OF OUTLET

Date: 08/27/21

Development Name: 3991 Dexter Ann-Arbor Road

City, Village or Township of Scio Township Section: 23

Washtenaw County, Michigan

Based on the composition of existing sandy soils on-site and the design of the storm water management systems, the 100-year / 24-hour rain event for a majority of the developed site will be infiltrated in under 48 hours and will only contribute flow to the Dexter-Ann Arbor Road right-of-way during extreme events exceeding that amount of rainfall. For a small portion of the developed site a detention basin is sized to detain a volume equal to 120% of the 100-year / 24-hour rain event and slowly discharge water at a controlled rate meeting requirements of the Washtenaw County Water Resources Commissioner rules & guidelines. Therefore, discharge rates will be decreased significantly from existing conditions and will not have a detrimental impact to the downstream drainage courses. In light of the fact that a majority of the developed site will be fully infiltrated and only potentially contribute water downstream during storms exceeding the 100-year / 24-hour event, detailed outlet calculations have not been prepared.

I hereby certify that the existing drainage courses are the only reasonable achievable storm water outlets for the proposed storm water management systems and that the existing drainage courses have sufficient capacity to serve as adequate outlets for the proposed systems, without detriment to, or diminution of, the drainage service that the existing outlets presently provide.

Signed: Ted Hirsch

Ted Hirsch, PE #6201065179
Registered Professional Engineer

CONSULTING
GROUP

February 6, 2018

Mr. Scott Betzoldt, P.E., Principal
Director of Residential and
Commercial Development
Midwestern Consulting, LLC
3815 Plaza Drive
Ann Arbor, Michigan 48108

RE: Letter of Infiltration Evaluation
Knights of Columbus – Dexter Ann Arbor Road Infiltration Testing
3991 Dexter Ann Arbor Road
Scio Township, Washtenaw County, Michigan
G2 Project No. 183022

Dear Mr. Betzoldt:

In accordance with your request, we have completed the infiltration evaluation for the proposed Knights of Columbus development to be constructed within the vacant parcel at the aforementioned location. We understand the proposed project will consist of the construction of a new residential community. Associated utilities, asphalt paving, and a detention pond will also be constructed in conjunction with the project. Due to the increase in collected stormwater as a result of the new impervious areas, infiltration basins will be constructed to re-introduce the collected stormwater into the natural water cycle by means of subsurface infiltration.

We conducted our infiltration evaluation in general accordance with the Washtenaw County Water Resource Commissioner (WCWRC) revised "Rules and Guidelines – Procedures & Design Criteria for Stormwater Management Systems" dated October 17, 2016. The purpose of our infiltration investigation is to determine infiltration rates to be used to determine the suitability of soils for use in infiltration basins.

FIELD OPERATIONS

Midwestern Consulting selected the location of the test pits. The locations of the test pits were determined in the field by use of site maps. The approximate locations of the test pits are shown in Test Pit Location Plan, Plate No. 1. The ground surface elevation at the test pit locations was approximated from the topographical information shown on the soil boring location plan.

The test pits were excavated by a representative of Nixon Services using a CAT backhoe equipped with 36-inch bucket. Within each test pit, Reece R. Kurdyla, E.I.T. of G2 Consulting Group, LLC maintained logs of the encountered subsurface conditions including changes in stratigraphy and observed groundwater levels. Upon completion of the test pit operations, the resulting excavations were backfilled in an uncontrolled manner. The test pit logs are based on the results of the field and laboratory soil classification and testing.

FIELD AND LABORATORY TESTING

Field testing included performing the encased falling head permeability test as described within Section V, Part D of the WCWRC "Rules and Guidelines – Procedures & Design Criteria for Stormwater Management Systems" revised October 17, 2016. The test consists of embedding a 6-inch diameter casing into the ground a minimum of 6 inches. After completing the initial pre-soak of the tested soil plug, a head of approximately 12 inches is poured into the casing and the drop in the head of water is recorded over time. Several trials are conducted when performing the infiltration testing to verify that a stable rate-of-drop has been established.

Representative soil samples were obtained to determine soil parameters pertinent to the evaluation of the on-site soils for infiltration. Soil samples obtained in the field were stored in sealed bags and transported to our Ann Arbor office for laboratory testing and classification. An experienced geotechnical engineer classified the samples in accordance with the G2 General Notes Terminology. Laboratory testing included determinations in accordance with the following standards:

- ASTM D422 – Sieve Analysis (No Hydrometer)
- ASTM D2488 – Visual-Manual Unified Soil Classification System (USCS)

The results of the field and laboratory testing are indicated on the test pit logs at the depths samples were taken. The test pit logs are presented on Figure Nos. 1 through 4. The results of the grainsize distribution determinations are presented on Figure No. 5. The results of our field testing are presented on Figure Nos. 6 through 13 in the Appendix. We will hold the soil samples for a period of 60 days following the issuance of this report. If you would like the samples retained beyond this period, or if you would like the samples returned to you, please let us know.

SITE CONDITIONS

The proposed development lies within a vacant lot located on the south side of Dexter Ann Arbor Road and west of North Wagner Road. The development area is generally covered by a manicured grass area with minimal vegetation within the northeast quadrant, while the remainder of the development consists of wooded area. Based on the topographical information available, site grades appear to slope slightly upward from the roadway at the northwest corner of the site, flattening out within the middle of the site, then sloping downward toward the west end of the site.

The property lies within the Honey Creek Basin and is part of the Huron watershed. The proposed development property is bounded by residential properties to the east, west, and northwest, Dexter Ann Arbor Road to the northeast, and by I-94 to the south.

SOIL AND GROUNDWATER CONDITIONS

Approximately 15 to 23 inches of sandy topsoil are present at the ground surface of test pits TP-1 and TP-2, and approximately 11 to 12 inches of sandy topsoil are present at the ground surface of test pits TP-3 and TP-4. Silty sand is present below the topsoil within test pits TP-1 and TP-2, and extends to depths of 3-1/2 and 4 feet, respectively. Sand is present at 4 feet in test pit TP-1 and extends to the explored depth of 5 feet. Sand and gravel is present at 3-1/2 feet in test pit TP-2 and extends to the explored depth of 5 feet. Sandy silt is present below the topsoil within test pits TP-3 and TP-4 and extends to 3 feet and 4 feet, respectively. Silty sand is present below the sandy silt within test pit TP-3 and extends to the explored depth of 9 feet. Sand and silt is present below the sandy silt within test pit TP-4 and extends to the explored depth of 9 feet.

No groundwater was observed during excavation operations within test pits TP-1 through TP-4. Fluctuations in long-term groundwater levels should be anticipated due to seasonal variations and

following periods of prolonged precipitation.

INFILTRATION CONSIDERATIONS

The following table provides the results of our observations during test pit operations:

Test Pit No.	Ground Surface Elevation (ft)[1]	Ground Water Elevation (ft)[2]	Test Elevation (ft)	Soil Type (USCS[3])	Observed Infiltration Rate (iph)	Design Infiltration Rate (iph[4])
TP-1	900	Dry	895	Sand with tr. silt (SP)	26.75	13.4
TP-2	899	Dry	894	Gravelly Sand (SM)	84.38	42.2
TP-3	891	Dry	883	Silty Sand (SM)	0.38	0.2
TP-4	889	Dry	882	Silty Sand (SM)	0.0	0.0

Notes:
1. Estimated based on available topographical information within Google Earth Pro.
2. Estimated at completion of excavation operations and not including perched groundwater.
3. Description in general accordance with Visual-Manual Unified Soil Classification System (ASTM D2488).
4. Infiltration rate (inches per hour) given using a design factor of safety of 2.

The resulting infiltration rates were calculated and equated to an effective infiltration rate over the period of one hour. A factor of safety of 2.0 has been used in presenting the design infiltration rate. Furthermore, it should be noted that the calculated infiltration rates do not include a reduction factor (R_f) due to the recent revisions within the WCWRC guidelines for testing.

Based on the results of our infiltration evaluation, we recommend the proposed infiltration basins be constructed to bear within the test elevations identified at the test pit locations within TP-1 and TP-2. We do not anticipate suitable infiltration will be available within the area of TP-3 and TP-4. Discrepancies between the design infiltration rate and the observed soil types can be attributed to the percentage of material passing the No. 200 sieve in addition to the in-situ relative density of the encountered soil types. Please refer to the sieve analysis presented in Figure No. 5 and test pit log Figure No. 3 in the appendix for the percentage of material passing the No. 200 sieve at the infiltration test elevations.

We recommend that a qualified geotechnical engineer or technician be present on-site during the excavation of the infiltration structure to verify that soils at the base of the proposed structure are consistent with soil conditions identified within this report.

GENERAL COMMENTS

If changes occur in the design, location, or concept of the project, conclusions and recommendations contained in this report are not valid unless G2 Consulting Group, LLC reviews the changes. G2 Consulting Group, LLC will then confirm any assumptions regarding the project scope presented herein or make changes in writing. The scope of the present investigation was limited to evaluation of subsurface conditions at the proposed test pit locations. No chemical or environmental testing or analyses were included in the scope of this investigation.

We base the analyses and recommendations submitted in this report upon the data from the test pits performed at the approximate locations shown on the Test Pit Location Plan, Plate No. 1. This report does not reflect variations that may occur between the actual test pit location and the actual infiltration basin location. The nature and extent of any such variations may not become clear until the time of construction. We recommend G2 Consulting Group, LLC observe all geotechnical related work, including subgrade preparation and engineered fill placement.

We appreciate the opportunity to be of service to Midwestern Consulting on this project and look forward to discussing the results presented. In the meantime, if you have any questions regarding this report or any other matter pertaining to the project, please call us.

Sincerely,

G2 Consulting Group, LLC

Reece R. Kurdyla, E.I.T.
Staff Engineer

Jason B. Stoops, P.E.
Associate / Project Manager

RRK/JBS/nab

Encl: Plate No. 1 – Test Pit Location Plan
Figure Nos. 1 through 4 – Test Pit Logs
Figure No. 5 – Grain Size Distribution
Figure Nos. 6 through 13 – Infiltration Test Logs
Figure No. 14 – General Notes Terminology

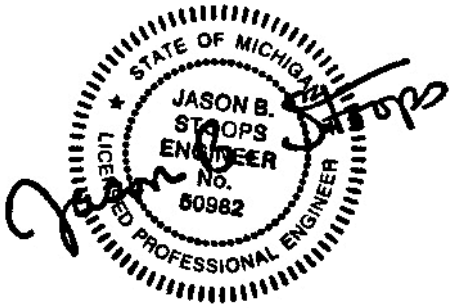



Legend

Test Pit Locations

Test Pit Location Plan		
Knights of Columbus 3991 Dexter Ann Arbor Road Scio Township, Michigan		
2G CONSULTING GROUP	Project No. 183022	
	Drawn by: RRK	
	Date: 1/26/18	Plate No. 1
	Scale: NTS	

Project Name: Dexter-Ann Arbor Road Infiltration Testing

Project Location: Scio Township, Michigan

G2 Project No. 183022

Latitude: N/A Longitude: N/A

Test Pit No. TP-1

CONSULTING GROUP

SUBSURFACE PROFILE				SOIL SAMPLE DATA				
ELEV. (ft)	PRO-FILE	GROUND SURFACE ELEVATION: 900.0 ft ±	DEPTH (ft)	SAMPLE TYPE/NO.	DRY DENSITY (PCF)	MOISTURE CONTENT (%)	PERCENT COMPACTION	UNCOF. COMP. ST. (PSF)
		Topsoil: Dark Brown Silty Sand (15 inches) 1.3		S-01				
		Brown Silty Sand with trace gravel 3.5		S-02				
895.0		Brown Sand with trace silt and gravel, occasional cobbles and boulders (Infiltration Rate = 13.38 iph) 5.0	5	S-03				
		End of Test Pit @ 5 ft						
890.0			10					
885.0			15					

Total Depth: 5 ft
Excavation Date: January 25, 2018
Inspector: R. Kurdyla
Contractor: Nixon Services
Operator: Ryan Nixon

Excavation Equipment:
Backhoe

Water Level Observation:
Dry during and upon completion of excavation operations

Excavation Backfilling Procedure:
Excavation backfilled with excavated soils

TEST PIT 183022.GPJ 20150116 G2 CONSULTING DATA TEMPLATE.GDT 2/6/18

Figure No. 154

Project Name: Dexter-Ann Arbor Road Infiltration Testing

Project Location: Scio Township, Michigan

G2 Project No. 183022

Latitude: N/A Longitude: N/A

Test Pit No. TP-2

CONSULTING GROUP

SUBSURFACE PROFILE				SOIL SAMPLE DATA				
ELEV. (ft)	PRO-FILE	GROUND SURFACE ELEVATION: 899.0 ft ±	DEPTH (ft)	SAMPLE TYPE/NO.	DRY DENSITY (PCF)	MOISTURE CONTENT (%)	PERCENT COMPACTION	UNCOF. COMP. ST. (PSF)
		Topsoil: Dark Brown Silty Sand (23 inches) 1.9		S-01				
		Brown Silty Sand with trace gravel 4.0		S-02				
894.0		Brown Sand and Gravel with trace silt, occasional cobbles and boulders (Infiltration Rate = 42.19 iph) 5.0	5	S-03				
		End of Test Pit @ 5 ft						
889.0			10					
884.0			15					

Total Depth: 5 ft
Excavation Date: January 25, 2018
Inspector: R. Kurdyla
Contractor: Nixon Services
Operator: Ryan Nixon

Excavation Equipment:
Backhoe

Water Level Observation:
Dry during and upon completion of excavation operations

Excavation Backfilling Procedure:
Excavation backfilled with excavated soils

TEST PIT 183022.GPJ 20150116 G2 CONSULTING DATA TEMPLATE.GDT 2/6/18

Figure No. 155

Project Name: Dexter-Ann Arbor Road Infiltration Testing

Project Location: Scio Township, Michigan

G2 Project No. 183022

Latitude: N/A Longitude: N/A

Test Pit No. TP-3

CONSULTING GROUP

SUBSURFACE PROFILE				SOIL SAMPLE DATA				
ELEV. (ft)	PRO-FILE	GROUND SURFACE ELEVATION: 891.0 ft ±	DEPTH (ft)	SAMPLE TYPE/NO.	DRY DENSITY (PCF)	MOISTURE CONTENT (%)	PERCENT COMPACTION	UNCOF. COMP. ST. (PSF)
		Topsoil: Dark Brown Silty Sand (12 inches)		S-01				
			1.0					
		Brown Sandy Silt with trace gravel		S-02				
			3.0					
886.0			5					
		Brown Silty Sand with trace gravel						
		(Infiltration Rate = 0.19 iph) Percent Finer Than No. 200 Sieve - 34.2%		S-03				
			9.0					
		End of Test Pit @ 9 ft						
881.0			10					
876.0			15					

Total Depth: 9 ft
Excavation Date: January 25, 2018
Inspector: R. Kurdyla
Contractor: Nixon Services
Operator: Ryan Nixon

Excavation Equipment:
Backhoe

Water Level Observation:
Dry during and upon completion of excavation operations

Excavation Backfilling Procedure:
Excavation backfilled with excavated soils

TEST PIT 183022.GPJ 20150116 G2 CONSULTING DATA TEMPLATE.GDT 2/6/18

Figure No. 156

Project Name: Dexter-Ann Arbor Road Infiltration Testing

Project Location: Scio Township, Michigan

G2 Project No. 183022

Latitude: N/A Longitude: N/A

Test Pit No. TP-4

CONSULTING GROUP

SUBSURFACE PROFILE				SOIL SAMPLE DATA				
ELEV. (ft)	PRO-FILE	GROUND SURFACE ELEVATION: 889.0 ft ±	DEPTH (ft)	SAMPLE TYPE/NO.	DRY DENSITY (PCF)	MOISTURE CONTENT (%)	PERCENT COMPACTION	UNCOF. COMP. ST. (PSF)
		Topsoil: Dark Brown Silty Sand (11 inches)		S-01				
			0.9					
		Brown Sandy Silt with trace gravel						
			4.0	S-02				
884.0			5					
		Brown Sand and Silt with trace gravel						
		(Infiltration Rate = 0.0 iph)		S-03				
			9.0					
		End of Test Pit @ 9 ft						
879.0			10					
874.0			15					

Total Depth: 9 ft
Excavation Date: January 25, 2018
Inspector: R. Kurdyla
Contractor: Nixon Services
Operator: Ryan Nixon

Excavation Equipment:
Backhoe

Water Level Observation:
Dry during and upon completion of excavation operations

Excavation Backfilling Procedure:
Excavation backfilled with excavated soils

TEST PIT 183022.GPJ 20150116 G2 CONSULTING DATA TEMPLATE.GDT 2/6/18

Figure No. 157

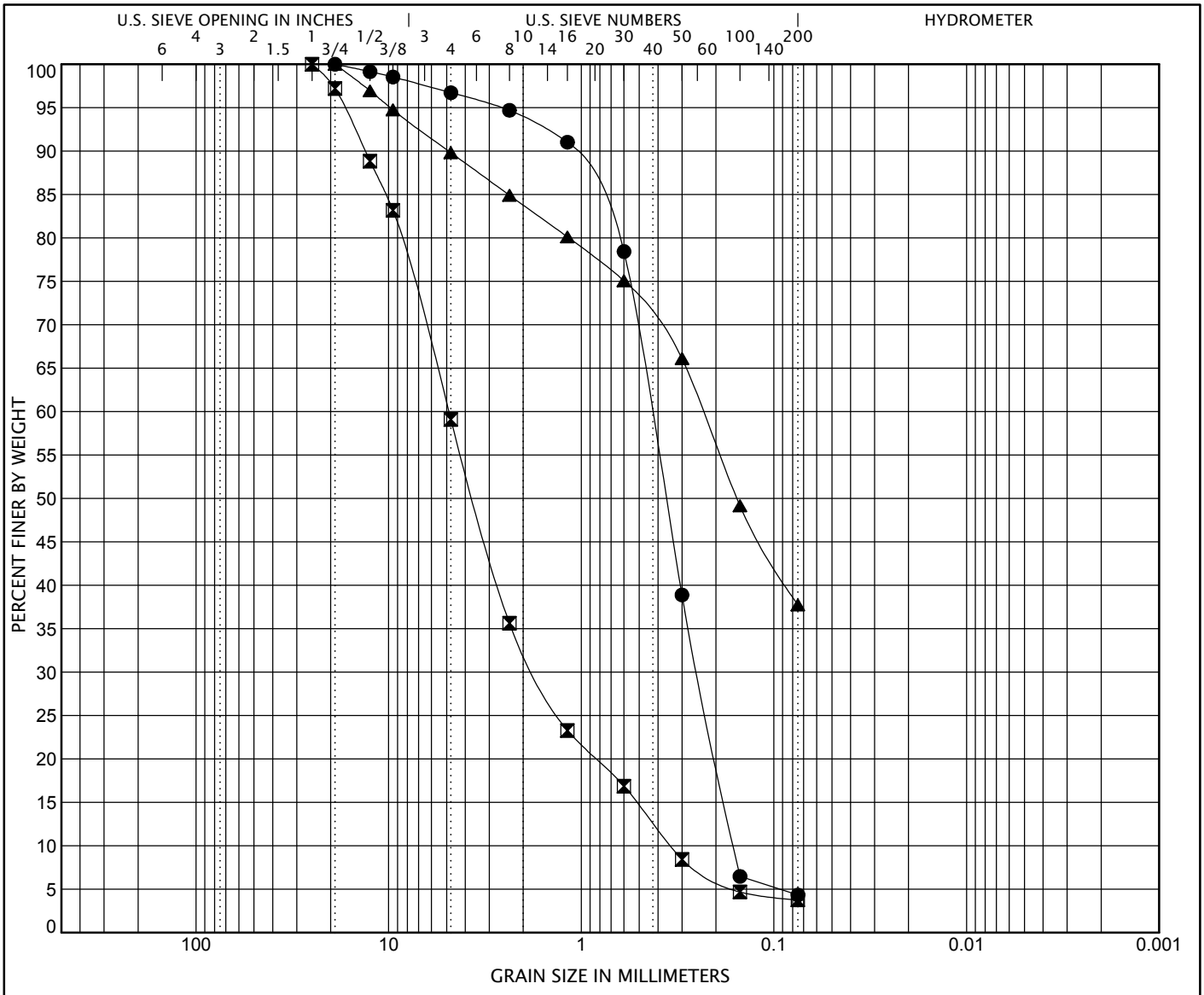

COBBLES	GRAVEL		SAND			SILT OR CLAY
	coarse	fine	coarse	medium	fine	

	Specimen ID	Description	LL	PL	PI	Cc	Cu
●	TP-1 S-03	Brown Sand with trace silt and gravel				0.9	2.7
⊠	TP-2 S-03	Brown Sand and Gravel with trace silt				1.8	14.3
▲	TP-4 S-03	Brown Sand and Silt with trace gravel					

	Specimen ID	D100	D60	D30	D10	%Gravel	%Sand	%Silt	%Clay
●	TP-1 S-03	19	0.434	0.248	0.162	3.3	92.4	4.3	
⊠	TP-2 S-03	25	4.875	1.721	0.341	40.9	55.3	3.8	
▲	TP-4 S-03	19	0.234			10.2	52.1	37.7	

US_GRAIN_SIZE 183022.GPJ 20140820 G2 CONSULTING DATA TEMPLATE.GDT 2/6/18

G2 CONSULTING GROUP

GRAIN SIZE DISTRIBUTION

Project Name: Dexter-Ann Arbor Road Infiltration Testing

Project Location: Scio Township, Michigan

G2 Project No.: 183022

Figure No. 5

G2 Consulting Group, LLC

Encased Falling Head Infiltration Test (WCWRC 2016)

Project:	Dexter - Ann Arbor Road Infiltration Testing	Job No.:	183022		
Location of Project:	Scio Township	Test Pit No.	TP-1.1	Depth (in)	60 in
Description of Soil:	Brown Sand w/ tr. silt and gravel	Depth of Test (in):	60 in		
Tested By:	R. Kurdyla	Date of Testing:	1/25/2018		
Casing Diameter (in):	6	Casing Embedment (in):	6		
Initial Head of Water (in):	12	Pre-Soak Time (min):	120		

Reading No.	Trial 1		Trial 2		Trial 3		
	Elapsed Time (min)	Depth Reading (in)	Elapsed Time (min)	Depth Reading (in)	Elapsed Time (min)	Depth Reading (in)	
1	0	4 2/16	0	3 10/16	0	3 10/16	
2	10	9 10/16	10	9 12/16	10	10 2/16	
3	20	13 4/16	20	13	20	13 8/16	←
4	30	16 6/16	30	15 12/16	30	16 8/16	←
5							
6							
7							
8							
9							
10							
11							
12							
13							

Reading No.	Trial 1	Trial 2	Trial 3
	Infiltration Rate (in/hr)	Infiltration Rate (in/hr)	Infiltration Rate (in/hr)
1	---	---	---
2	33.00	36.75	39.00
3	21.75	19.50	20.25
4	18.75	16.50	18.00
5	---	---	---
6	---	---	---
7	---	---	---
8	---	---	---
9	---	---	---
10	---	---	---
11	---	---	---
12	---	---	---
13	---	---	---

Elapsed Time (min)	Head Drop (in)	Observed Infiltration Rate (iph)	Design Infiltration Rate (iph)
10	3	18.00	9.00

Notes:

1. Refer to "Rules and Guidelines - Procedures & Design Critera for Stormwater Management Systems", WCWRC, Rev. Oct. 2016.
2. ← = Used in Calculating Infiltration Rate
3. Design Infiltration Rate includes FOS = 2.

Figure No. 6

G2 Consulting Group, LLC

Encased Falling Head Infiltration Test (WCWRC 2016)

Project:	Dexter - Ann Arbor Road Infiltration Testing	Job No.:	183022		
Location of Project:	Scio Township	Test Pit No.	TP-1.2	Depth (in)	60 in
Description of Soil:	Brown Sand w/ tr. silt and gravel	Depth of Test (in):	60 in		
Tested By:	R. Kurdyla	Date of Testing:	1/25/2018		
Casing Diameter (in):	6	Casing Embedment (in):	6		
Initial Head of Water (in):	12	Pre-Soak Time (min):	120		

Reading No.	Trial 1		Trial 2		Trial 3		
	Elapsed Time (min)	Depth Reading (in)	Elapsed Time (min)	Depth Reading (in)	Elapsed Time (min)	Depth Reading (in)	
1	0	3 8/16	0	3 8/16	0	3 12/16	
2	10	12 6/16	10	12	10	12 10/16	←
3	20	17 2/16	20	17 2/16	20	17 14/16	←
4							
5							
6							
7							
8							
9							
10							
11							
12							
13							

Reading No.	Trial 1	Trial 2	Trial 3
	Infiltration Rate (in/hr)	Infiltration Rate (in/hr)	Infiltration Rate (in/hr)
1	---	---	---
2	53.25	51.00	53.25
3	28.50	30.75	31.50
4	---	---	---
5	---	---	---
6	---	---	---
7	---	---	---
8	---	---	---
9	---	---	---
10	---	---	---
11	---	---	---
12	---	---	---
13	---	---	---

Elapsed Time (min)	Head Drop (in)	Observed Infiltration Rate (iph)	Design Infiltration Rate (iph)
10	5 4/16	31.50	15.75

Notes:

1. Refer to "Rules and Guidelines - Procedures & Design Critera for Stormwater Management Systems", WCWRC, Rev. Oct. 2016.
2. ← = Used in Calculating Infiltration Rate
3. Design Infiltration Rate includes FOS = 2.

Figure No. 7

G2 Consulting Group, LLC

Encased Falling Head Infiltration Test (WCWRC 2016)

Project:	Dexter - Ann Arbor Road Infiltration Testing	Job No.:	183022		
Location of Project:	Scio Township	Test Pit No.	TP-2.1	Depth (in)	60 in
Description of Soil:	Brown Sand and Gravel w/ trace silt	Depth of Test (in):	60 in		
Tested By:	R. Kurdyla	Date of Testing:	1/25/2018		
Casing Diameter (in):	6	Casing Embedment (in):	6		
Initial Head of Water (in):	12	Pre-Soak Time (min):	120		

Reading No.	Trial 1		Trial 2		Trial 3		
	Elapsed Time (min)	Depth Reading (in)	Elapsed Time (min)	Depth Reading (in)	Elapsed Time (min)	Depth Reading (in)	
1	0	4	0	4 12/16	0	3 4/16	←
2	10	17 4/16	10	17 4/16	10	17 4/16	←
3							
4							
5							
6							
7							
8							
9							
10							
11							
12							
13							

Reading No.	Trial 1	Trial 2	Trial 3
	Infiltration Rate (in/hr)	Infiltration Rate (in/hr)	Infiltration Rate (in/hr)
1	---	---	---
2	79.50	75.00	84.00
3	---	---	---
4	---	---	---
5	---	---	---
6	---	---	---
7	---	---	---
8	---	---	---
9	---	---	---
10	---	---	---
11	---	---	---
12	---	---	---
13	---	---	---

Elapsed Time (min)	Head Drop (in)	Observed Infiltration Rate (iph)	Design Infiltration Rate (iph)
10	14	84.00	42.00

Notes:

1. Refer to "Rules and Guidelines - Procedures & Design Critera for Stormwater Management Systems", WCWRC, Rev. Oct. 2016.
2. ← = Used in Calculating Infiltration Rate
3. Design Infiltration Rate includes FOS = 2.

Figure No. 8

G2 Consulting Group, LLC

Encased Falling Head Infiltration Test (WCWRC 2016)

Project:	Dexter - Ann Arbor Road Infiltration Testing	Job No.:	183022		
Location of Project:	Scio Township	Test Pit No.	TP-2.2	Depth (in)	60 in
Description of Soil:	Brown Sand and Gravel w/ trace silt	Depth of Test (in):	60 in		
Tested By:	R. Kurdyla	Date of Testing:	1/25/2018		
Casing Diameter (in):	6	Casing Embedment (in):	6		
Initial Head of Water (in):	12	Pre-Soak Time (min):	120		

	Trial 1		Trial 2		Trial 3		
Reading No.	Elapsed Time (min)	Depth Reading (in)	Elapsed Time (min)	Depth Reading (in)	Elapsed Time (min)	Depth Reading (in)	
1	0	4 4/16	0	3 14/16	0	3 10/16	←
2	10	17 12/16	10	17 12/16	10	17 12/16	←
3							
4							
5							
6							
7							
8							
9							
10							
11							
12							
13							

	Trial 1	Trial 2	Trial 3
Reading No.	Infiltration Rate (in/hr)	Infiltration Rate (in/hr)	Infiltration Rate (in/hr)
1	---	---	---
2	81.00	83.25	84.75
3	---	---	---
4	---	---	---
5	---	---	---
6	---	---	---
7	---	---	---
8	---	---	---
9	---	---	---
10	---	---	---
11	---	---	---
12	---	---	---
13	---	---	---

Elapsed Time (min)	Head Drop (in)	Observed Infiltration Rate (iph)	Design Infiltration Rate (iph)
10	14 2/16	84.75	42.38

Notes:

1. Refer to "Rules and Guidelines - Procedures & Design Critera for Stormwater Management Systems", WCWRC, Rev. Oct. 2016.
2. ← = Used in Calculating Infiltration Rate
3. Design Infiltration Rate includes FOS = 2.

G2 Consulting Group, LLC

Encased Falling Head Infiltration Test (WCWRC 2016)

Project:	Dexter - Ann Arbor Road Infiltration Testing	Job No.:	183022		
Location of Project:	Scio Township	Test Pit No.	TP-3.1	Depth (in)	108 in
Description of Soil:	Brown Silty Sand w/ tr. gravel	Depth of Test (in):	96 in		
Tested By:	R. Kurdyla	Date of Testing:	1/25/2018		
Casing Diameter (in):	6	Casing Embedment (in):	6		
Initial Head of Water (in):	12	Pre-Soak Time (min):	120		

Reading No.	Trial 1		Trial 2		Trial 3		
	Elapsed Time (min)	Depth Reading (in)	Elapsed Time (min)	Depth Reading (in)	Elapsed Time (min)	Depth Reading (in)	
1	0	3 10/16	0	4 2/16	0	4 4/16	
2	10	3 14/16	10	4 2/16	10	4 4/16	
3	20	4	20	4 2/16	20	4 4/16	
4	30	4	30	4 2/16	30	4 4/16	←
5	40	4	40	4 2/16	40	4 4/16	←
6	50	4	50	4 4/16	50	4 6/16	
7	60	4 2/16	60	4 4/16	60	4 6/16	
8							
9							
10							
11							
12							
13							

Reading No.	Trial 1	Trial 2	Trial 3
	Infiltration Rate (in/hr)	Infiltration Rate (in/hr)	Infiltration Rate (in/hr)
1	---	---	---
2	1.50	0.00	0.00
3	0.75	0.00	0.00
4	0.00	0.00	0.00
5	0.00	0.00	0.00
6	0.00	0.75	0.75
7	0.75	0.00	0.00
8	---	---	---
9	---	---	---
10	---	---	---
11	---	---	---
12	---	---	---
13	---	---	---

Elapsed Time (min)	Head Drop (in)	Observed Infiltration Rate (iph)	Design Infiltration Rate (iph)
10	0	0.00	0.00

Notes:

1. Refer to "Rules and Guidelines - Procedures & Design Critera for Stormwater Management Systems", WCWRC, Rev. Oct. 2016.
2. ← = Used in Calculating Infiltration Rate
3. Design Infiltration Rate includes FOS = 2.

Figure No. 10

G2 Consulting Group, LLC

Encased Falling Head Infiltration Test (WCWRC 2016)

Project:	Dexter - Ann Arbor Road Infiltration Testing	Job No.:	183022		
Location of Project:	Scio Township	Test Pit No.	TP-3.2	Depth (in)	108 in
Description of Soil:	Brown Silty Sand w/ tr. gravel	Depth of Test (in):	96 in		
Tested By:	R. Kurdyla	Date of Testing:	1/25/2018		
Casing Diameter (in):	6	Casing Embedment (in):	6		
Initial Head of Water (in):	12	Pre-Soak Time (min):	120		

Reading No.	Trial 1		Trial 2		Trial 3		
	Elapsed Time (min)	Depth Reading (in)	Elapsed Time (min)	Depth Reading (in)	Elapsed Time (min)	Depth Reading (in)	
1	0	4 6/16	0	5 6/16	0	5 14/16	
2	10	4 14/16	10	5 6/16	10	6	
3	20	5	20	5 8/16	20	6	
4	30	5 2/16	30	5 10/16	30	6 2/16	
5	40	5 2/16	40	5 10/16	40	6 4/16	
6	50	5 4/16	50	5 12/16	50	6 4/16	←
7	60	5 6/16	60	5 14/16	60	6 6/16	←
8							
9							
10							
11							
12							
13							

Reading No.	Trial 1	Trial 2	Trial 3
	Infiltration Rate (in/hr)	Infiltration Rate (in/hr)	Infiltration Rate (in/hr)
1	---	---	---
2	3.00	0.00	0.75
3	0.75	0.75	0.00
4	0.75	0.75	0.75
5	0.00	0.00	0.75
6	0.75	0.75	0.00
7	0.75	0.75	0.75
8	---	---	---
9	---	---	---
10	---	---	---
11	---	---	---
12	---	---	---
13	---	---	---

Elapsed Time (min)	Head Drop (in)	Observed Infiltration Rate (iph)	Design Infiltration Rate (iph)
10	2/16	0.75	0.38

Notes:

1. Refer to "Rules and Guidelines - Procedures & Design Critera for Stormwater Management Systems", WCWRC, Rev. Oct. 2016.
2. ← = Used in Calculating Infiltration Rate
3. Design Infiltration Rate includes FOS = 2.

Figure No. 11

G2 Consulting Group, LLC

Encased Falling Head Infiltration Test (WCWRC 2016)

Project:	Dexter - Ann Arbor Road Infiltration Testing	Job No.:	183022		
Location of Project:	Scio Township	Test Pit No.	TP-4.1	Depth (in)	108 in
Description of Soil:	Brown Sand and Silt w/ tr. gravel	Depth of Test (in):	84 in		
Tested By:	R. Kurdyla	Date of Testing:	1/25/2018		
Casing Diameter (in):	6	Casing Embedment (in):	6		
Initial Head of Water (in):	12	Pre-Soak Time (min):	120		

Reading No.	Trial 1		Trial 2		Trial 3		
	Elapsed Time (min)	Depth Reading (in)	Elapsed Time (min)	Depth Reading (in)	Elapsed Time (min)	Depth Reading (in)	
1	0	3 14/16	0	4	0	4 2/16	
2	10	4	10	4	10	4 2/16	
3	20	4	20	4 2/16	20	4 2/16	
4	30	4	30	4 2/16	30	4 2/16	
5	40	4	40	4 2/16	40	4 4/16	
6	50	4	50	4 2/16	50	4 4/16	←
7	60	4	60	4 2/16	60	4 4/16	←
8							
9							
10							
11							
12							
13							

Reading No.	Trial 1	Trial 2	Trial 3
	Infiltration Rate (in/hr)	Infiltration Rate (in/hr)	Infiltration Rate (in/hr)
1	---	---	---
2	0.75	0.00	0.00
3	0.00	0.75	0.00
4	0.00	0.00	0.00
5	0.00	0.00	0.75
6	0.00	0.00	0.00
7	0.00	0.00	0.00
8	---	---	---
9	---	---	---
10	---	---	---
11	---	---	---
12	---	---	---
13	---	---	---

Elapsed Time (min)	Head Drop (in)	Observed Infiltration Rate (iph)	Design Infiltration Rate (iph)
10	0	0.00	0.00

Notes:

1. Refer to "Rules and Guidelines - Procedures & Design Critera for Stormwater Management Systems", WCWRC, Rev. Oct. 2016.
2. ← = Used in Calculating Infiltration Rate
3. Design Infiltration Rate includes FOS = 2.

Figure No. 12

G2 Consulting Group, LLC

Encased Falling Head Infiltration Test (WCWRC 2016)

Project:	Dexter - Ann Arbor Road Infiltration Testing	Job No.:	183022		
Location of Project:	Scio Township	Test Pit No.	TP-4.2	Depth (in)	108 in
Description of Soil:	Brown Sand and Silt w/ tr. gravel	Depth of Test (in):	84 in		
Tested By:	R. Kurdyla	Date of Testing:	1/25/2018		
Casing Diameter (in):	6	Casing Embedment (in):	6		
Initial Head of Water (in):	12	Pre-Soak Time (min):	120		

Reading No.	Trial 1		Trial 2		Trial 3		
	Elapsed Time (min)	Depth Reading (in)	Elapsed Time (min)	Depth Reading (in)	Elapsed Time (min)	Depth Reading (in)	
1	0	4 10/16	0	5	0	5 2/16	
2	10	4 14/16	10	5	10	5 2/16	
3	20	5	20	5	20	5 2/16	
4	30	5	30	5 2/16	30	5 2/16	
5	40	5	40	5 2/16	40	5 4/16	
6	50	5	50	5 2/16	50	5 4/16	←
7	60	5	60	5 2/16	60	5 4/16	←
8							
9							
10							
11							
12							
13							

Reading No.	Trial 1	Trial 2	Trial 3
	Infiltration Rate (in/hr)	Infiltration Rate (in/hr)	Infiltration Rate (in/hr)
1	---	---	---
2	1.50	0.00	0.00
3	0.75	0.00	0.00
4	0.00	0.75	0.00
5	0.00	0.00	0.75
6	0.00	0.00	0.00
7	0.00	0.00	0.00
8	---	---	---
9	---	---	---
10	---	---	---
11	---	---	---
12	---	---	---
13	---	---	---

Elapsed Time (min)	Head Drop (in)	Observed Infiltration Rate (iph)	Design Infiltration Rate (iph)
10	0	0.00	0.00

Notes:

1. Refer to "Rules and Guidelines - Procedures & Design Critera for Stormwater Management Systems", WCWRC, Rev. Oct. 2016.
2. ← = Used in Calculating Infiltration Rate
3. Design Infiltration Rate includes FOS = 2.

Figure No. 13

GENERAL NOTES TERMINOLOGY

Unless otherwise noted, all terms herein refer to the Standard Definitions presented in ASTM 653.

PARTICLE SIZE

Boulders		- greater than 12 inches
Cobbles		- 3 inches to 12 inches
Gravel	- Coarse	- 3/4 inches to 3 inches
	- Fine	- No. 4 to 3/4 inches
Sand	- Coarse	- No. 10 to No. 4
	- Medium	- No. 40 to No. 10
	- Fine	- No. 200 to No. 40
Silt		- 0.005mm to 0.074mm
Clay		- Less than 0.005mm

CLASSIFICATION

The major soil constituent is the principal noun, i.e. clay, silt, sand, gravel. The second major soil constituent and other minor constituents are reported as follows:

Second Major Constituent (percent by weight)	Minor Constituent (percent by weight)
Trace - 1 to 12%	Trace - 1 to 12%
Adjective - 12 to 35%	Little - 12 to 23%
And - over 35%	Some - 23 to 33%

COHESIVE SOILS

If clay content is sufficient so that clay dominates soil properties, clay becomes the principal noun with the other major soil constituent as modifier, i.e. sandy clay. Other minor soil constituents may be included in accordance with the classification breakdown for cohesionless soils, i.e. silty clay, trace sand, little gravel.

Consistency	Unconfined Compressive Strength (psf)	Approximate Range of (N)
Very Soft	Below 500	0 - 2
Soft	500 - 1,000	3 - 4
Medium	1,000 - 2,000	5 - 8
Stiff	2,000 - 4,000	9 - 15
Very Stiff	4,000 - 8,000	16 - 30
Hard	8,000 - 16,000	31 - 50
Very Hard	Over 16,000	Over 50

Consistency of cohesive soils is based upon an evaluation of the observed resistance to deformation under load and not upon the Standard Penetration Resistance (N).

COHESIONLESS SOILS

Density Classification	Relative Density %	Approximate Range of (N)
Very Loose	0 - 15	0 - 4
Loose	16 - 35	5 - 10
Medium Compact	36 - 65	11 - 30
Compact	66 - 85	31 - 50
Very Compact	86 - 100	Over 50

Relative Density of cohesionless soils is based upon the evaluation of the Standard Penetration Resistance (N), modified as required for depth effects, sampling effects, etc.

SAMPLE DESIGNATIONS

AS - Auger Sample – Cuttings directly from auger flight
BS - Bottle or Bag Samples
S - Split Spoon Sample - ASTM D 1586
LS - Liner Sample with liner insert 3 inches in length
ST - Shelby Tube sample - 3 inch diameter unless otherwise noted
PS - Piston Sample - 3 inch diameter unless otherwise noted
RC - Rock Core - NX core unless otherwise noted

STANDARD PENETRATION TEST (ASTM D 1586) - A 2.0 inch outside-diameter, 1-3/8 inch inside-diameter split barrel sampler is driven into undisturbed soil by means of a 140-pound weight falling freely through a vertical distance of 30 inches. The sampler is normally driven three successive 6-inch increments. The total number of blows required for the final 12 inches of penetration is the Standard Penetration Resistance (N).

MIDWESTERN CONSULTING

3815 Plaza Drive
Ann Arbor, Michigan 48108
734.995.0200

October 8, 2021

Norfolk Development Corporation
8178 Jackson Road, Suite D
Ann Arbor, Michigan 48108

RE: Trip Generation and Left-turn Lane Analysis for Residential Development at 3991 Dexter-Ann Arbor Road

The following is a brief traffic analysis to determine if a left-turn lane is needed at your site driveway located along Dexter-Ann Arbor Road west of Wagner Road. As this letter will show, the driveway does not meet the traffic volume criteria for a left-turn lane.

Site Plan
The site plan for the development at 3991 Dexter-Ann Arbor Road is shown below.

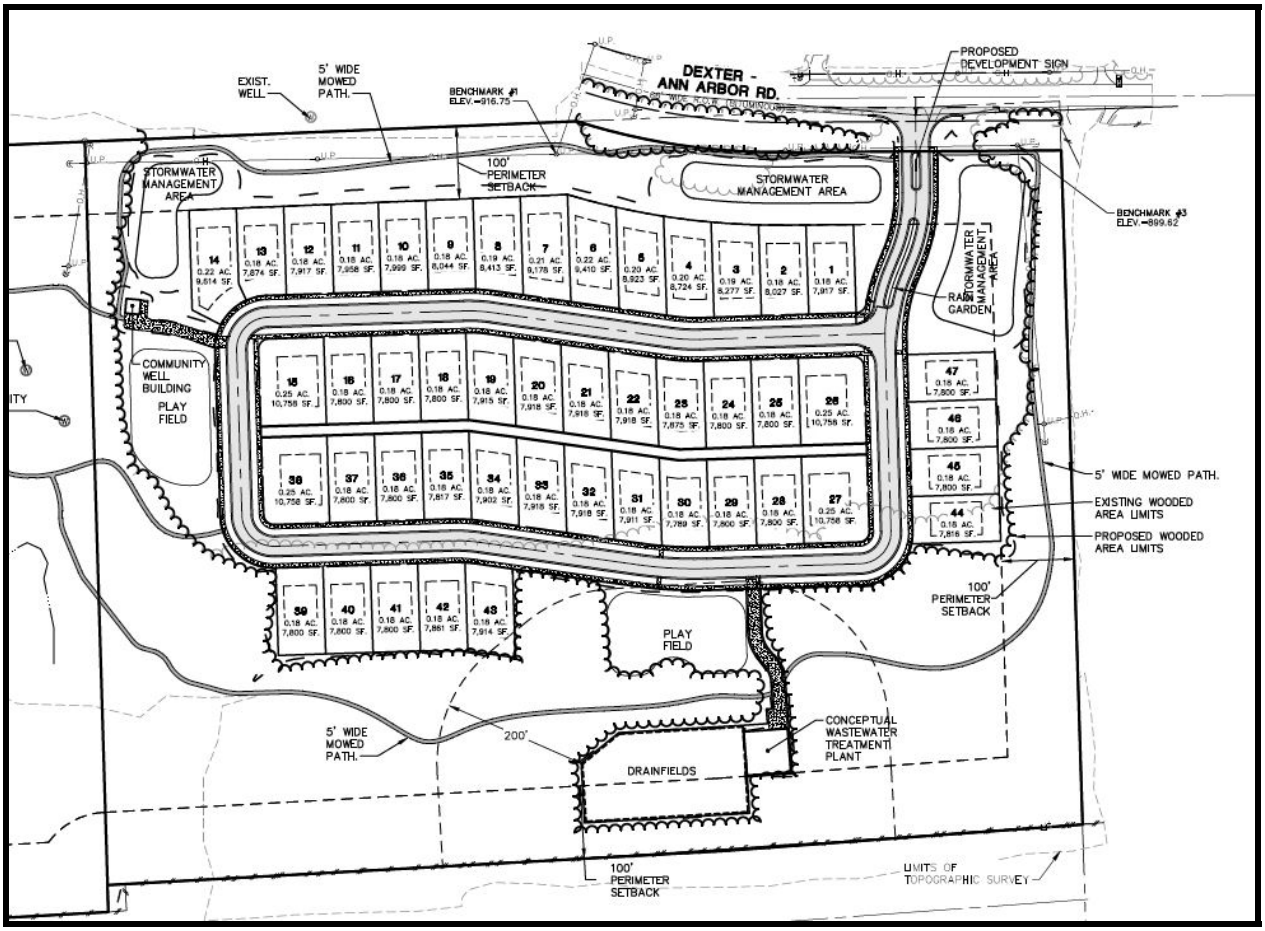

Figure – Site Plan for Residential Development at 3991 Dexter-Ann Arbor Road

Existing Traffic

According to the County's traffic count data base, there was an existing 2017 and 2021 traffic count along Dexter-Ann Arbor Road, west of Wagner Road. The 2021 count had few cars than the 2017 count (but close). This analysis uses the higher 2017 counts to conservatively represent the "current" traffic volumes.

In 2017, the two-way traffic volume was a total of 6,651 vehicles per day, with 3,345 eastbound and 3,306 westbound vehicles. The peak hours occurred from 8:00-9:00 AM and from 5:00-6:00 PM.

Time	EB	WB	Total
12:00 AM	8	24	32
1:00 AM	4	6	10
2:00 AM	2	5	7
3:00 AM	7	7	14
4:00 AM	10	4	14
5:00 AM	61	5	66
6:00 AM	153	39	192
7:00 AM	379	117	496
8:00 AM	404	139	543
9:00 AM	224	108	332
10:00 AM	208	122	330
11:00 AM	175	181	356
12:00 PM	184	190	374
1:00 PM	158	189	347
2:00 PM	167	218	385
3:00 PM	211	294	505
4:00 PM	227	412	639
5:00 PM	230	426	656
6:00 PM	192	281	473
7:00 PM	132	195	327
8:00 PM	90	124	214
9:00 PM	74	109	183
10:00 PM	39	59	98
11:00 PM	6	52	58
Total	3345	3306	6651

Time	EB	WB	Total
12:00 AM	25%	75%	100%
1:00 AM	40%	60%	100%
2:00 AM	29%	71%	100%
3:00 AM	50%	50%	100%
4:00 AM	71%	29%	100%
5:00 AM	92%	8%	100%
6:00 AM	80%	20%	100%
7:00 AM	76%	24%	100%
8:00 AM	74%	26%	100%
9:00 AM	67%	33%	100%
10:00 AM	63%	37%	100%
11:00 AM	49%	51%	100%
12:00 PM	49%	51%	100%
1:00 PM	46%	54%	100%
2:00 PM	43%	57%	100%
3:00 PM	42%	58%	100%
4:00 PM	36%	64%	100%
5:00 PM	35%	65%	100%
6:00 PM	41%	59%	100%
7:00 PM	40%	60%	100%
8:00 PM	42%	58%	100%
9:00 PM	40%	60%	100%
10:00 PM	40%	60%	100%
11:00 PM	10%	90%	100%
Total	50%	50%	100%

Trip Generation

The proposed residential development consists of 47 single family homes. According the Institute of Transportation Engineers (ITE) Trip Generation Manual, a development of this size typically generates 519 weekday trips, 38 AM peak hour trips, and 49 PM peak hour trips.

	ITE	Size	Weekday	Morning Peak Hour			Afternoon Peak Hour		
Land Use	Code	SF/Units	24-Hr	Enter	Exit	Total	Enter	Exit	Total
SFH	210	47	519	10	28	38	31	18	49
		47	519	10	28	38	31	18	49

Trip Distribution
Assuming the traffic volumes at the site driveway arrive and depart in the same directions as the existing flow of traffic, then 74% of site traffic would come from the west and depart to the east in the morning peak hour. During the afternoon peak hour, 65% would come from the east and depart to the west.

Inbound From	%	AMIN	%	PMIN	Outbound To:	%	AMOUT	%	PMOUT
East	26%	3	65%	20	East	74%	21	35%	6
West	74%	7	35%	11	West	26%	7	65%	12

Forecast Traffic Volumes
Applying the site generated trips to the site driveway at Dexter-Ann Arbor Road, the forecast traffic volumes at that intersection would be as follows:

	EBT	EBR	WBL	WBT	NBL	NBR	Total
AM Peak Hour	404	7	3	139	7	21	581
PM Peak Hour	230	11	20	426	12	6	705

Determining the Need for a Left-Turn Lane
According to the Michigan Department of Transportation standards, a left-turn lane would be needed at the driveway if the traffic volumes meet the criteria on their Left Turn Graph 605A.

Each point, one AM and one PM, on the graph is the coordinates of the Volume Advancing (total Westbound) and Volume Opposing (total Eastbound) at the site driveway. Each sweeping line in the graph represents the percentage of left-turns in the volume advancing. The graphs shows the lines for 40%, 20%, 15%, 10% and 5%. Based on those lines you extrapolate where the line would be for the calculated percentage of left-turns in the volume advancing, in this case 2.1% and 4.5%. If the plotted points fall left of the line, than a left-turn lane is not-needed. If the points fall on the right side of the line, then a left-turn lane is recommended.

	Vadv	Vopp	% LT in Vadv
AM Peak Hour	142	411	2.1%
PM Peak Hour	446	242	4.5%

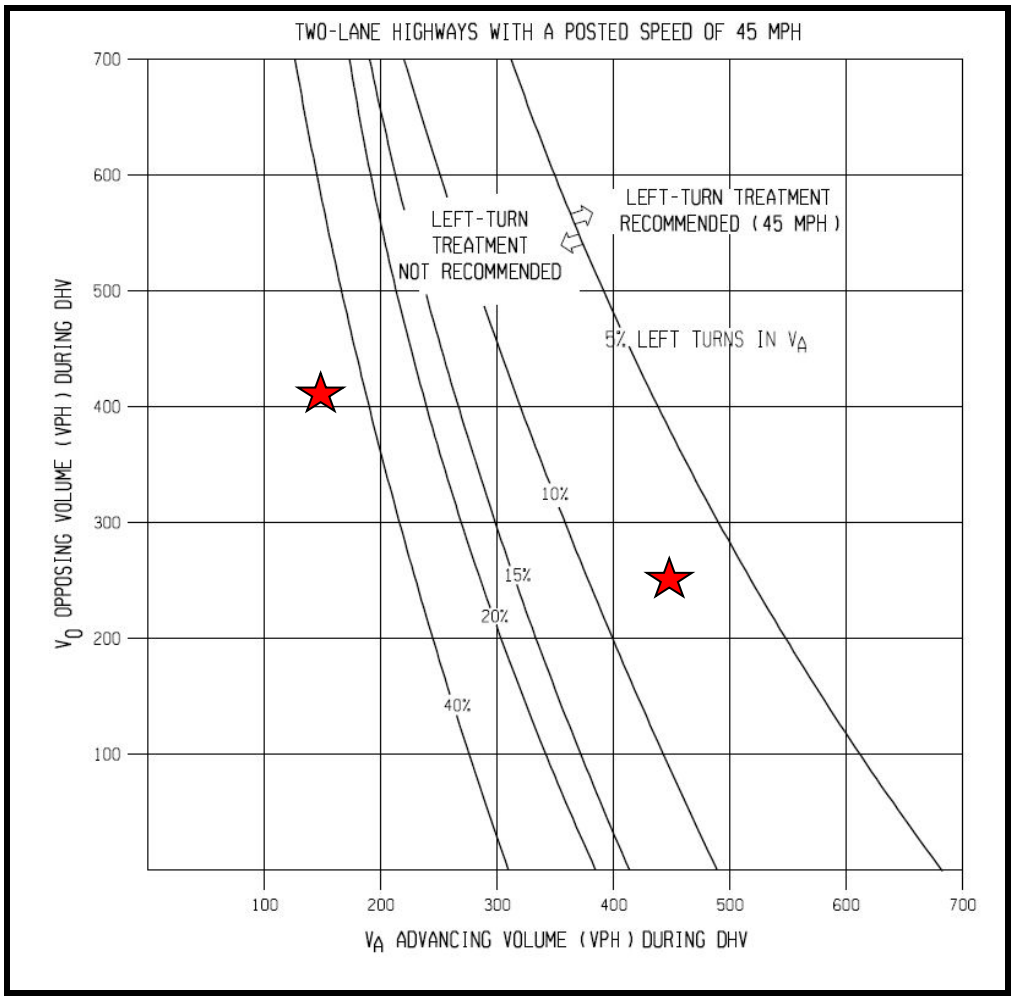

Since both data points fall to the left of their corresponding percentage of left-turns in volume advancing, no left-turn lane would be needed at the site driveway.

If you have any questions regarding this letter or its findings, please feel free to contact me.

Sincerely,

Michael R. Cool

Michael R. Cool, P.E.
Midwestern Consulting
Attached (3)



Single-Family Detached Housing
(210)

Vehicle Trip Ends vs: **Dwelling Units**
On a: **Weekday**

Setting/Location: **General Urban/Suburban**
Number of Studies: 159
Avg. Num. of Dwelling Units: 264
Directional Distribution: 50% entering, 50% exiting

Vehicle Trip Generation per Dwelling Unit

Average Rate	Range of Rates	Standard Deviation
9.44	4.81 - 19.39	2.10

Data Plot and Equation

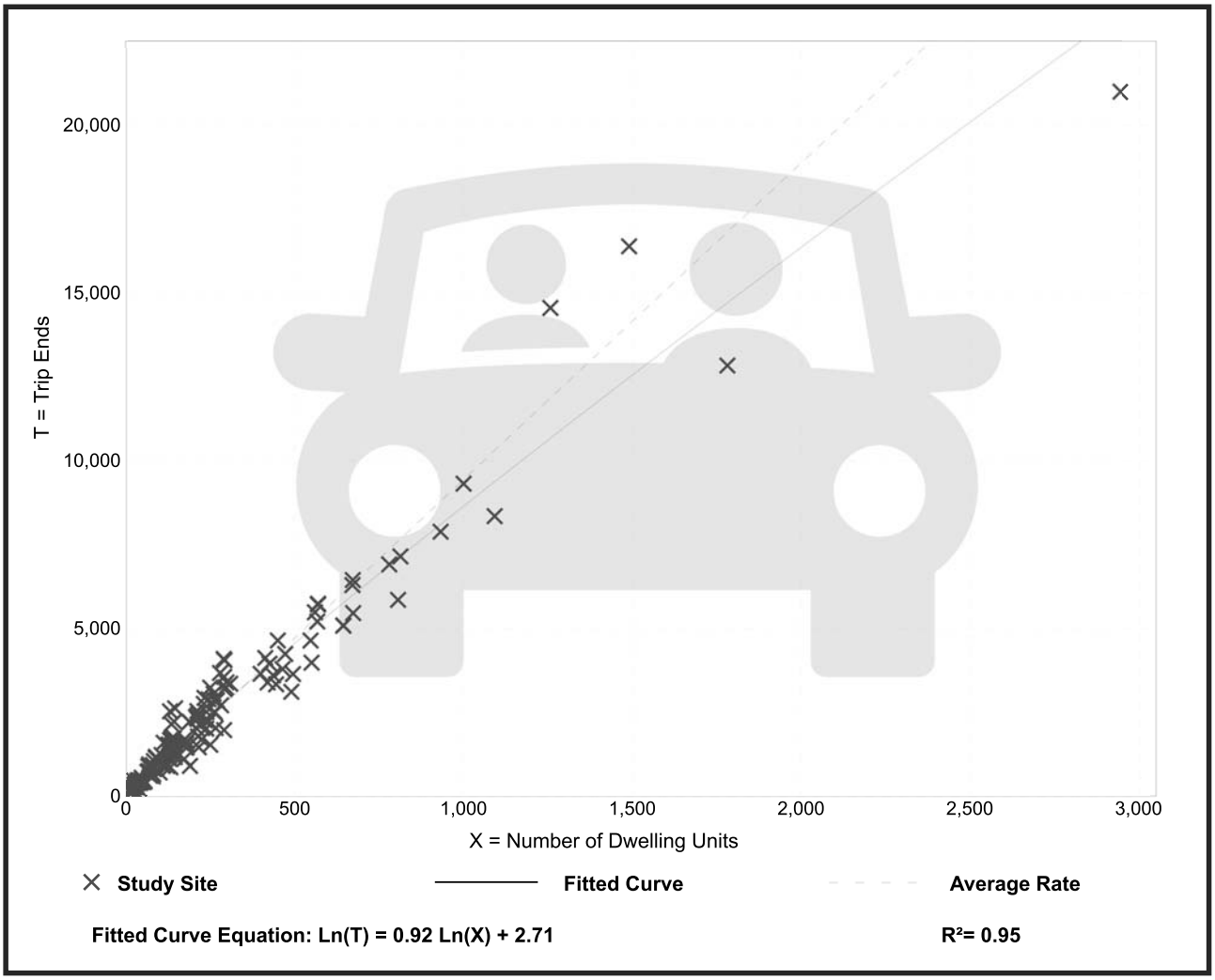

Trip Gen Manual, 10th Ed + Supplement ● Institute of Transportation Engineers

Single-Family Detached Housing
(210)

Vehicle Trip Ends vs:	**Dwelling Units**
On a:	**Weekday,**
	Peak Hour of Adjacent Street Traffic,
	One Hour Between 7 and 9 a.m.
Setting/Location:	**General Urban/Suburban**
Number of Studies:	173
Avg. Num. of Dwelling Units:	219
Directional Distribution:	25% entering, 75% exiting

Vehicle Trip Generation per Dwelling Unit

Average Rate	Range of Rates	Standard Deviation
0.74	0.33 - 2.27	0.27

Data Plot and Equation

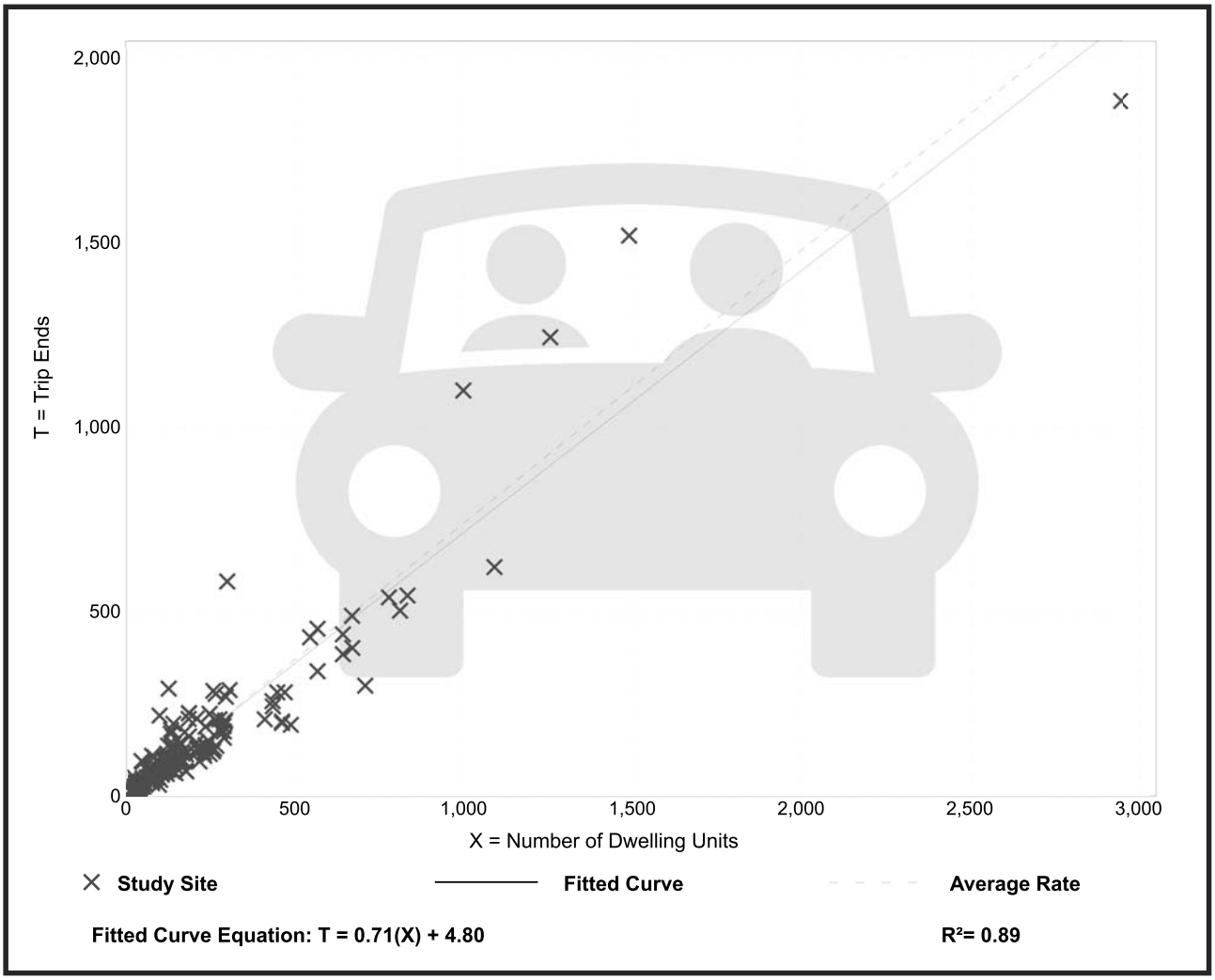

Trip Gen Manual, 10th Ed + Supplement ● Institute of Transportation Engineers

Single-Family Detached Housing
(210)

Vehicle Trip Ends vs:	**Dwelling Units**
On a:	**Weekday,**
	Peak Hour of Adjacent Street Traffic,
	One Hour Between 4 and 6 p.m.
Setting/Location:	**General Urban/Suburban**
Number of Studies:	190
Avg. Num. of Dwelling Units:	242
Directional Distribution:	63% entering, 37% exiting

Vehicle Trip Generation per Dwelling Unit

Average Rate	Range of Rates	Standard Deviation
0.99	0.44 - 2.98	0.31

Data Plot and Equation

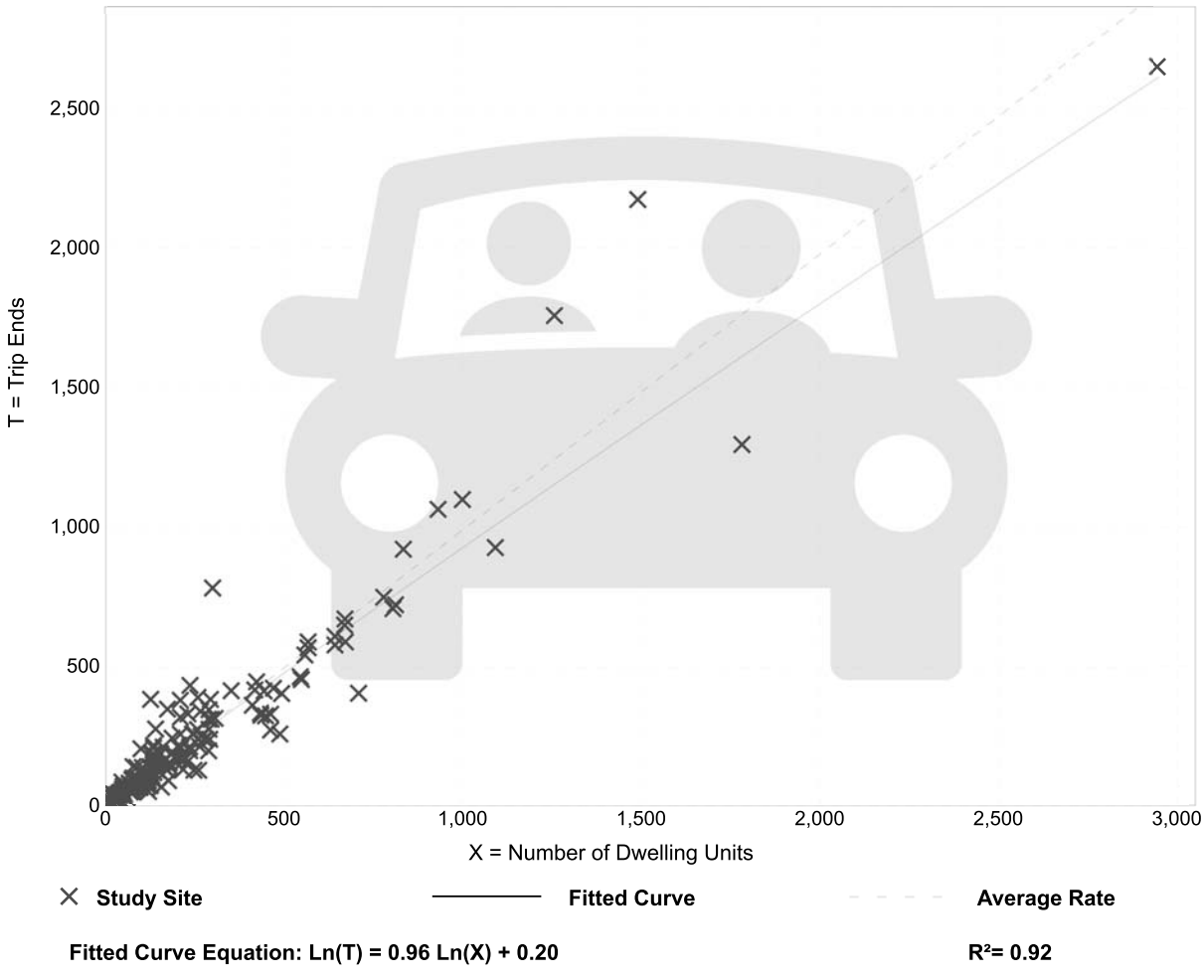

3991 DEXTER-ANN ARBOR RD

SCIO TOWNSHIP, WASHTENAW, MICHIGAN

PRELIMINARY PLANNED UNIT DEVELOPMENT

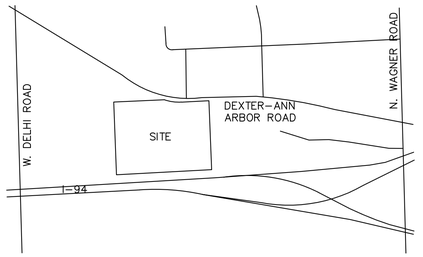

VICINITY MAP
SCALE : NTS

OWNER

COLUMBUS HOME COMPANY OF ANN ARBOR
530 ELIZABETH STREET
ANN ARBOR, MICHIGAN 48104

DEVELOPER/APPLICANT

NORFOLK DEVELOPMENT CORPORATION
8178 JACKSON RD., SUITE D
ANN ARBOR, MI 48108
CONTACT: JIM HAEUSSLER
(734) 260-9678

ENGINEER/SURVEY/LANDSCAPE ARCH.

MIDWESTERN CONSULTING, LLC
3815 PLAZA DR.
ANN ARBOR, MI 48108
CONTACT: TOM COVERT
734-995-0200

PROJECT PUD NARRATIVE

THE PROPOSED PLANNED UNIT DEVELOPMENT IS A 47 UNIT SITE CONDOMINIUM ON A 47 ACRE SITE LOCATED ON DEXTER-ANN ARBOR ROAD. THE DEVELOPMENT INCLUDES SINGLE FAMILY RESIDENTIAL LOTS IN A CLUSTERED DEVELOPMENT IN ORDER TO PRESERVE NATURAL FEATURES ON THE SITE. APPROXIMATELY 71% OF THE SITE WILL BE PRESERVED AS OPEN SPACE INCLUDING THE PRESERVATION OF EXISTING WOODLAND, LANDMARK TREES, AND OPEN WATER WETLAND.

THE DEVELOPMENT WILL BE SERVICED BY A COMMUNITY WASTEWATER SYSTEM. ALL ONSITE WATER WILL BE SUPPLIED FROM A COMMUNITY WATER SYSTEM. THE SITE CONDOMINIUM WILL BE GOVERNED BY A HOMEOWNERS ASSOCIATION WITH GENERAL RULES AND REGULATIONS ESTABLISHED IN THE MASTER DEED AND BYLAWS. THE PRIVATE ROADS AND GENERAL COMMON ELEMENTS WILL BE DEDICATED TO THE HOMEOWNERS ASSOCIATION UPON COMPLETION OF THE SITE DEVELOPMENT.



SITE MAP
SCALE : 1" = 150'

SHEET INDEX

#	SHEET TITLE
01	COVER SHEET
02	PROJECT NARRATIVES
03	EXISTING CONDITIONS, BOUNDARY SURVEY AND REMOVALS PLAN
04	OVERALL LAYOUT AND LANDSCAPE NARRATIVE
05	OVERALL UTILITY PLAN
06	PRELIMINARY GRADING PLAN
07	PRELIMINARY STORMWATER DRAINAGE PLAN
08	STORMWATER CALCULATIONS 1 OF 2
09	08 STORMWATER CALCULATIONS 2 OF 2
10	FIRE PROTECTION AND SOLID WASTE PLAN
11	ENTRANCE SIGHT DISTANCE PLAN AND PROFILE
12	SITE DETAILS
13	STORMWATER DETAILS
14	TEST PIT LOGS
15	TEST PIT LOGS
16	TREE REMOVAL PLAN 1 OF 2
17	TREE REMOVAL PLAN 2 OF 2
18	TREE LIST 1 OF 2
19	TREE LIST 2 OF 2
20	PARALLEL PLAN – R1

3991 DEXTER-ANN ARBOR RD

JOB No. **17310**

DATE: 8/27/21
SHEET 01 OF 20
CADD: RML
ENG: RML2
PM: TJC
TECH:
/17310CV1

01

REVISIONS:	REV. DATE
PER MUNICIPAL REVIEW	11/05/21

MIDWESTERN CONSULTING
3815 Plaza Drive Ann Arbor, Michigan 48108
(734) 995-0200 • www.midwesternconsulting.com
Land Development • Land Survey • Institutional • Municipal
Wireless Communications • Transportation • Landfill Services

RELEASED FOR:	DATE
MUNICIPAL REVIEW	11/05/21

STATE OF MICHIGAN
THEODORE HIRSCH
ENGINEER
No. 65179
LICENSED PROFESSIONAL ENGINEER

P.E. # 6201065179

M:\Civil3d_Pro\17310\Prelim PUD\17310CV1.dwg, 11/5/2021 1:43 PM, Ted P. Hirsch, 01 COVER SHEET, MCLG PDF.pc3
Copyright © 2016 Midwestern Consulting, L.L.C. All rights reserved. No part of this drawing may be used or reproduced in any form or by any means, or stored in a database or retrieval system, without prior permission of Midwestern Consulting, L.L.C.

PUD NARRATIVE

3991 Dexter-Ann Arbor Road – PUD Narrative

a. The nature of the project, projected phases and timetable.

The proposed Planned Unit Development is a 47 unit condominium on a 46 acre site located on Dexter-Ann Arbor Road west of N. Wagner Road, east of W. Delhi Road and immediately north of I-94. The development includes detached single family residential lots in a clustered development in order to preserve open space and natural features on the site.

Over 71% of the site (33 acres) will be open space that includes a 100-foot perimeter around the development and preservation of existing woodlands, landmark trees, and open water wetland. Preservation and restoration of the existing pavilion on the site and pedestrian pathways through the open space provide opportunity for social gatherings and recreational activities.

The proposed road network includes a boulevard entry from Dexter-Ann Arbor Road to a loop road within the existing open field area on the site. This roadway, with adjacent sidewalk, provides not only a vehicular but a pedestrian connected community.

The development will be constructed in a single phase served by a community wastewater treatment system and community water system located on the site that will be maintained by the development.

b. The proposed density, number, and types of dwelling units.

The project will consist of single family residential lots. The residents will have access to extensive open space areas, including pathways, a pavilion and play fields. The typical home is geared toward meeting the needs of the existing community by providing housing opportunities within the middle range of the single family residential market. The project has modest density, similar and consistent to development patterns along the Dexter-Ann Arbor road corridor, of one dwelling unit per acre while realizing 71% (33 acres) of the site as open space. See the preliminary site data chart and typical lot detail. The proposed PUD density is consistent with the Scio Township Master Plan Future Land Use for the site as low density single family residential with one dwelling unit per acre.

c. A statement describing how the proposed project meets the objectives of the PUD District pursuant to section 36-245c.

36-244: Qualifications of subject parcel. *The applicant for a PUD must demonstrate through the submission of both written documentation and site development plans that all of the following criteria are met:*

1) The intent of section 36-244 is met.

This residential development meets the intent of the PUD ordinance by providing clustering of residential lots to maximize open space on the site. This clustering of homes within the existing open field on the site also allows for the preservation of existing natural features. The open space areas encompass approximately 71% of the site while still maintaining a density that aligns with the Scio Township Master Plan.

The development includes several pedestrian pathways and sidewalk routes that provide connectivity within the development to promote recreational and social gathering activities within the community. The proposed planned unit development meets the overall goals of the Scio Township Master Plan, goals for the Huron River sub-area that includes focused development along the Ann Arbor-Dexter corridor, while preserving over 90% of the Priority 3 bio-reserve that is identified on the site within the Scio Township Master Plan.

2) Approval of the PUD will result in one or more of the following:

a. Recognizable and material benefit:

Approval of the residential development PUD application will provide many positive benefits for the people that choose to live there and the general community. The clustered layout of residential lots and the vast amount of open space emphasizes the preserved natural features including natural drainage patterns, woodlands, and open water wetland. Sidewalks, proposed pedestrian pathways, play fields, and an existing pavilion provide the opportunity for recreational use of the site. Park amenities within the woodland park area will be identified during the site planning process. Additionally, the applicant proposes contribution to Township Fire Services.

b. Protection and preservation of natural resources:

The proposed site density and layout limits the mass grading of the site and provides opportunity for preservation of over 33 acres (71% of the site) for preservation and open space. This includes contiguous woodlands, landmark trees, and open water wetland that might not otherwise be preserved if this parcel was developed as individual land divisions or as a conventional subdivision. Natural features preservation is estimated to include:

- Approximately 27 acres (~86%) of preserved woodland that includes a complex of open water wetland and drainage patterns.
- Approximately 26,271 DBH inches (~93%) of estimated protected/landmark tree preservation throughout the site including in the preserved woodlands noted above.
- Preserved drainage patterns/steep slopes and open water pond

3) The proposed type and density of use shall not result in an unreasonable increase in the need for or burden upon public services, facilities, roads, and utilities:

The Scio Township Master Plan identifies the Future Land Use designation for the site of low density residential at up to one dwelling unit per acre (consistent with R-1 zoning district). The R-1 concept plan illustrates 38 residential lots at the site, which equates to 47 residential lots with a 25% density bonus with the PUD.

The proposed development includes 47 dwelling units for a density of 1.01 dwelling units per acre which is harmonious with the Township Master Plan Future Land Use density. The number of proposed dwelling units, provision of private water / waste water facilities, and private roads results in less burden being placed on Scio Township public services, facilities, roads and utilities than might be realized with a typical development.

The development will be served by a private community waste water system. All on site water will be supplied from a community water system. Both of these systems have rigorous testing, design standards, and maintenance requirements as mandated by Michigan EGLE and their permitting / approval process that are beyond those of individual on-lot septic systems and wells. Therefore, these on-site systems are anticipated to better protect the health safety and welfare of the Township and adjacent properties.

The condominium will be governed by a Homeowners Association with General Rules and Regulations established in the Master Deed and Bylaws. The private roads and general common elements will be dedicated to the Homeowners Association upon completion of the site development.

The Scio Township Fire and Rescue services and police protection (Washtenaw County Sheriff-Scio Township sub-station) are located within 2 miles of the site on N. Zeeb Road. Revenue for the Township will be generated from the development of the site that benefits both fire and police protection services. The proposed development would be within the Ann Arbor Public Schools district.

4) The proposed development shall be consistent with the public health, safety, and welfare of the township:

The proposed residential planned unit development is consistent and not different than other single family residential developments and would be consistent with the general public health, safety and welfare of the Township. The development is proposing to meet the published standards of the Township and County for site access, waste water treatment, water treatment, and stormwater management including infiltration.

5) The proposed development shall minimize any negative environmental impact of the subject site or surrounding land:

The site layout is designed to minimize any environmental impacts on the site or surrounding properties and includes a minimum 100 foot perimeter buffer between the proposed lots and the neighboring adjacent properties. Additionally, the proposed 33 acres of open space encompass additional buffering to adjacent properties, preservation of natural features, drainage patterns, and wildlife corridors that reduce the impact of the development on the site and the adjacent properties.

The stormwater management system includes implementation of best management practices throughout the site. These best management practices include infiltration trench, naturalized infiltration/detention basins, and rear yard swales.

The proposed wastewater treatment system will be designed and maintained as required by the State of Michigan through the operation and maintenance permit in order to minimize impact to the environment to the greatest extent practicable. This is similar to permitting for municipal wastewater treatment facilities. A qualified licensed operator will be required to operate and provide testing and reporting per EGLE requirements.

6) The proposed development shall minimize any negative impact upon surrounding properties:

The proposed development is located along the Dexter-Ann Arbor Road corridor between the City of Dexter and City of Ann Arbor, which is identified as a target location for clustered residential development and natural feature preservation in the Township Master Plan. The extension of clustered housing with an overall density consistent with the Township Master Plan reduces the overall impact on the surrounding lands when incorporating clustering as promoted by the Master Plan and PUD ordinance. The proposed layout includes single family homes that are harmonious with the size and density of adjacent existing development along the Dexter-Ann Arbor Road corridor and within the Township. The proposed open space provides buffering between the I-94/M-

14 corridor and the development as well as the Dexter-Ann Arbor Road residential corridor.

7) The proposed development shall be consistent with the goals and policies of the Township Master Plan:

As noted above, the residential development is consistent with the Scio Township Master Plan. The Future Land Use Map in the Township Master Plan identifies the site as Low Density Residential. The desired land uses for the low density residential land use (up to one dwelling unit per acre) includes single family residences in clustered development and parks, open spaces, and conservation areas. The proposed PUD proposes both of these land uses. The proposed overall density of 1.01 dwelling units per acre reflects the master plan and proximity to existing R-1 and R-2 zoning districts along the Dexter-Ann Arbor Road corridor where densities of up to 2 dwelling units per acre would be allowed.

The 33 acres of open space includes a Priority 3 bio-reserve identified in the Scio Township Master Plan and preserves a substantial amount of the natural features on the site. The proposed pedestrian pathways, restoration of the existing pavilion, construction of additional site amenities, and extensive open space provides connectivity throughout the site, active and passive recreation, and social gathering opportunities for homeowners. All while preserving natural features and existing drainage/wildlife corridors maintaining rural character.

d. A statement from a registered professional engineer describing how the proposed project will be served by public water, sanitary, and storm drainage.

The development will be serviced by a private community wastewater system. The wastewater treatment system will be monitored by a licensed operator and controlled with State maintenance and discharge permits. All on-site water will be supplied from a community water system permitted through Michigan EGLE. Stormwater will be managed onsite in a combination of detention and infiltration basins meeting the Washtenaw County Water Resource Commission design guidelines. Stormwater systems include best management practices of infiltration trench and establishment of native vegetation in stormwater basins and rear yard swales.

The condominium will be governed by a Homeowners Association with Rules and Regulations established in the Master Deed and Bylaws. The private roads and general common elements will be dedicated to the Homeowners Association upon completion of the site development.

e. Proof of ownership or legal interest in property.

The owner has entered into an Agreement of Sale with the applicant for the property.

Standards for PUD Review by Planning Commission (Per 36-249d of Zoning Ordinance):

1. In relation to underlying zoning, the proposed type and density of use shall not result in a material increase in the need for public services, facilities, and utilities, and shall not place a material burden upon the subject or surrounding land or property owners and occupants or the natural environment.

As noted above, the proposed residential PUD is consistent with and not different than other single family residential developments and would be consistent with the general public health, safety and welfare of the Township. The development is proposing to meet the published standards of the Township and County for site access, waste water treatment, water treatment, and stormwater management including infiltration.

The proposed layout includes single family homes that are harmonious with the size and density of adjacent existing development along the Dexter-Ann Arbor Road corridor (R-2, R-1, and AG zoning classifications) and within the Township. The proposed open space provides buffering between the I-94/M-14 corridor and the development as well as the Dexter-Ann Arbor Road residential corridor. A combination of both evergreen and deciduous trees are proposed along the norther property line to provide additional screening between the proposed lots and adjacent residential parcels.

The clustered development preserves the majority of the Priority 3 bio-reserve that is identified on the site. Protected tree removals are well below the permitted 20% removals (~6.5%) and mitigation is provided on site for the proposed landmark tree removals.

2. The proposed development shall be compatible with the Township Master Plan and shall be consistent with the intent and spirit of the PUD Ordinance.

As noted above, the residential development is consistent with the Scio Township Master Plan. The Future Land Use Map in the Township Master Plan identifies the site as Low Density Residential. The desired land uses for the low density residential land use (up to one dwelling unit per acre) includes single family residences in clustered development and parks, open spaces, and conservation areas. The proposed PUD proposes both of these land uses. The proposed overall density of 1.01 dwelling units per acre reflects the master plan and a total of 71% of the site will be open space. The development, which proposes deviations from the R1 zoning district lot area, and placement regulations in order to cluster development, preserve natural resources and provide significant open space on the site similarly to other approved PUDs, meets the spirit of the Planned Unit Development ordinance.

3. The PUD shall not change the essential character of the surrounding area.

The Dexter-Ann Arbor Road corridor is identified as a target location for clustered residential development and natural feature preservation in the Township Master Plan. The proposed single family residential land use is consistent with the surrounding area that is predominantly existing single family residential with the R-1 and R-2 zoning classification (consistent with the R-1 zoning classification that is the basis of the proposed PUD).

4. The proposed PUD shall be under single ownership or control such that there is a single person or entity having responsibility for completing the project in conformity with this Ordinance. This provision shall not prohibit a transfer of ownership or control upon due notice to the Zoning Administrator.

The development will be serviced by a community wastewater system and community water system. The site condominium will be governed by a homeowners association with general rules and regulations established in the master deed and bylaws. The private roads and general common elements will be dedicated to the homeowners association upon completion of the site development. The ownership of the community wastewater and community water systems will be transferred to the homeowners association upon completion of sales.

SAMPLE HOME TYPOLOGIES













TRAFFIC GENERATION MEMO EXCERPTS

October 8, 2021

Norfolk Development Corporation
8178 Jackson Road, Suite D
Ann Arbor, Michigan 48108

RE: Trip Generation and Left-turn Lane Analysis for Residential Development at 3991 Dexter-Ann Arbor Road

The following is a brief traffic analysis to determine if a left-turn lane is needed at your site driveway located along Dexter-Ann Arbor Road west of Wagner Road. As this letter will show, the driveway does not meet the traffic volume criteria for a left-turn lane.

Existing Traffic

According to the County's traffic count data base, there was an existing 2017 and 2021 traffic count along Dexter-Ann Arbor Road, west of Wagner Road. The 2021 count had few cars than the 2017 count (but close). This analysis uses the higher 2017 counts to conservatively represent the "current" traffic volumes.

In 2017, the two-way traffic volume was a total of 6,651 vehicles per day, with 3,345 eastbound and 3,306 westbound vehicles. The peak hours occurred from 8:00-9:00 AM and from 5:00-6:00 PM.

Time	EB	WB	Total
12:00 AM	8	24	32
1:00 AM	4	6	10
2:00 AM	2	5	7
3:00 AM	7	7	14
4:00 AM	10	4	14
5:00 AM	61	5	66
6:00 AM	153	39	192
7:00 AM	379	117	496
8:00 AM	404	139	543
9:00 AM	224	108	332
10:00 AM	208	122	330
11:00 AM	175	181	356
12:00 PM	184	190	374
1:00 PM	158	189	347
2:00 PM	167	218	385
3:00 PM	211	294	505
4:00 PM	227	412	639
5:00 PM	230	426	656
6:00 PM	192	281	473
7:00 PM	132	195	327
8:00 PM	90	124	214
9:00 PM	74	109	183
10:00 PM	39	59	98
11:00 PM	6	52	58
Total	3345	3306	6651

Time	EB	WB	Total
12:00 AM	25%	75%	100%
1:00 AM	40%	60%	100%
2:00 AM	29%	71%	100%
3:00 AM	50%	50%	100%
4:00 AM	71%	29%	100%
5:00 AM	92%	8%	100%
6:00 AM	80%	20%	100%
7:00 AM	76%	24%	100%
8:00 AM	74%	26%	100%
9:00 AM	67%	33%	100%
10:00 AM	63%	37%	100%
11:00 AM	49%	51%	100%
12:00 PM	49%	51%	100%
1:00 PM	46%	54%	100%
2:00 PM	43%	57%	100%
3:00 PM	42%	58%	100%
4:00 PM	36%	64%	100%
5:00 PM	35%	65%	100%
6:00 PM	41%	59%	100%
7:00 PM	40%	60%	100%
8:00 PM	42%	58%	100%
9:00 PM	40%	60%	100%
10:00 PM	40%	60%	100%
11:00 PM	10%	90%	100%
Total	50%	50%	100%

Trip Generation

The proposed residential development consists of 47 single family homes. According the Institute of Transportation Engineers (ITE) Trip Generation Manual, a development of this size typically generates 519 weekday trips, 38 AM peak hour trips, and 49 PM peak hour trips.

	ITE	Size	Weekday	Morning Peak Hour			Afternoon Peak Hour		
Land Use	Code	SF/Units	24-Hr	Enter	Exit	Total	Enter	Exit	Total
SFH	210	47	519	10	28	38	31	18	49
		47	519	10	28	38	31	18	49

Trip Distribution

Assuming the traffic volumes at the site driveway arrive and depart in the same directions as the existing flow of traffic, then 74% of site traffic would come from the west and depart to the east in the morning peak hour. During the afternoon peak hour, 65% would come from the east and depart to the west.

Inbound From	%	AMIN	%	PMIN	Outbound To:	%	AMOUT	%	PMOUT
East	26%	3	65%	20	East	74%	21	35%	6
West	74%	7	35%	11	West	26%	7	65%	12

Forecast Traffic Volumes

Applying the site generated trips to the site driveway at Dexter-Ann Arbor Road, the forecast traffic volumes at that intersection would be as follows:

	EBT	EBR	WBL	WBT	NBL	NBR	Total
AM Peak Hour	404	7	3	139	7	21	581
PM Peak Hour	230	11	20	426	12	6	705

Determining the Need for a Left-Turn Lane

According to the Michigan Department of Transportation standards, a left-turn lane would be needed at the driveway if the traffic volumes meet the criteria on their Left Turn Graph 605A.

Each point, one AM and one PM, on the graph is the coordinates of the Volume Advancing (total Westbound) and Volume Opposing (total Eastbound) at the site driveway. Each sweeping line in the graph represents the percentage of left-turns in the volume advancing. The graphs shows the lines for 40%, 20%, 15%, 10% and 5%. Based on those lines you extrapolate where the line would be for the calculated percentage of left-turns in the volume advancing, in this case 2.1% and 4.5%. If the plotted points fall left of the line, than a left-turn lane is not-needed. If the points fall on the right side of the line, then a left-turn lane is recommended.

	Vadv	Vopp	% LT in Vadv
AM Peak Hour	142	411	2.1%
PM Peak Hour	446	242	4.5%

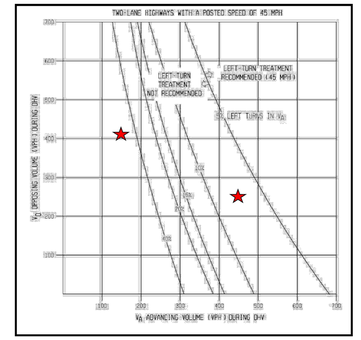

Since both data points fall to the left of their corresponding percentage of left-turns in volume advancing, no left-turn lane would be needed at the site driveway.

If you have any questions regarding this letter or its findings, please feel free to contact me.

Sincerely,

Michael R. Cool, P.E.
Midwestern Consulting
Attached (3)

PUBLIC BENEFITS

- APPROXIMATELY 71% OPEN SPACE WITH PRESERVATION OF 33 ACRES OF WOODLAND/PRIORITY 3 BIORESERVE
- RECREATIONAL AND SOCIAL GATHERING OPPORTUNITIES ON SITE INCLUDING PEDESTRIAN PATHWAYS, PAVILION, AND PLAY FIELDS
- CONTRIBUTION TO TOWNSHIP FIRE SERVICES

SOCIO-ECONOMICS

- $21.2 MILLION PROJECT
- 3 YEARS TO CONSTRUCT
- PROJECTED POPULATION
  2.55 PERSONS PER HOME
  120 PERSONS TOTAL
  MEDIAN AGE NEAR 42
- PROJECTED ANNUAL TAX REVENUE
  OVER $445,000 FOR TOWNSHIP, COUNTY, AND ANN ARBOR PUBLIC SCHOOLS AT $9,500 PER HOME PER YEAR

SITE DATA COMPARISON CHART

	Proposed Underlying per Master Plan - R-1 Single Family Residential		Allowed/ Required Planned Unit Development		Proposed - Planned Unit Development - Residential		Proposed Deviation from Underlying
Zoning							
Zoning District	Existing Zoning: RC Master Plan Future Land Use single family residential -				Underlying zoning standards: R-1 per Master Plan		
Land Use	Single Family Residential (Detached)		Single Family Residential (Detached)		Single Family Residential (Detached)		Complies
Site Area							
	2,033,677	sf gross		sf min	2,033,677	sf gross	Complies
	46.69	Acres Gross		acres min	46.69	Acres Gross	Complies
Site Requirements							
Front Setback	NA		50	ft min.	100	ft min.	Complies
Side Setback	NA	ft	50	ft min.	100	ft min.	Complies
Rear Setback			50	ft min.	100	ft min.	Complies
Perimeter setback	NA	ft	100	ft for density bonus	100	ft min.	Complies
Natural Features							
Wetland Setbacks	30	ft min. typical	30	ft min. typical	30	ft min.	Complies
Water Feature buffer zones	55	ft min. typical	55	ft min. typical	NA	ft	Complies
Dwelling Units							
Number of Units	46	Homes	38	per parallel plan	47	Homes	Complies
			47	with 25% density bonus			
Gross Lot Density	1.00	DU/Acre max.	1.01	DU/Acre	1.01	DU/Acre	Complies
Lots							
Min. Lot Area	43,560	sf min		sf	7,800	sf min.	**Deviates**
Average Lot Area					8,270	sf	**Deviates**
Min. Lot Width	150	ft min.			65	ft	**Deviates**
Setbacks: Front	50	ft		ft	25	ft	**Deviates**
Side	20	ft		ft	10	ft	**Deviates**
Corner/Side	50	ft		ft	25	ft	**Deviates**
Rear	50	ft		ft	25	ft	**Deviates**
Lot Coverage	20%	Maximum			35.0%	Max.	**Deviates**
Max. Floor Area Coverage	20%	Maximum			65.0%	Max.	**Deviates**
Building Height	2.5	stories			2.5	stories	Complies
	35	ft			35	ft max.	Complies
Open Space							
			30%	minimum	>71%	proposed	Complies
			60%	for bonus	>71%	proposed	Complies
			2 BMPS	for bonus	2 BMPS to be provided		Complies

MIDWESTERN CONSULTING
3815 Plaza Drive, Ann Arbor, Michigan 48108
(734) 995-0200 • www.midwesternconsulting.com
Land Development • Land Survey • Institutional • Municipal
Wireless Communications • Transportation • Landfill Services

CLIENT
NORFOLK DEVELOPMENT CORPORATION
8178 JACKSON RD., SUITE D
ANN ARBOR, MI 48108
JIM HAEUSSLER
(734) 260-9678

3991 DEXTER-ANN ARBOR RD

PRELIMINARY PLANNED UNIT DEVELOPMENT
PROJECT NARRATIVES

02

DATE: 08/27/21
SHEET 02 OF 20
CADD: RML
ENG: RML2
PM: MC
TECH:
I:\17310\DV1

JOB No. 17310

REVISIONS:	REV. DATE
PER MUNICIPAL REVIEW	11/05/21

M:\Civil 3d_Proj\17310\Prelim PUD\17310DV1.dwg, 11/8/2021 10:05 AM, Quinn C. Foster, 02 PROJECT NARRATIVES, MCLLC PDF.pc3
Copyright © 2021 Midwestern Consulting, L.L.C. All rights reserved. No part of this drawing may be used or reproduced in any form or by any means, or stored in a database or retrieval system, without prior permission of Midwestern Consulting L.L.C.

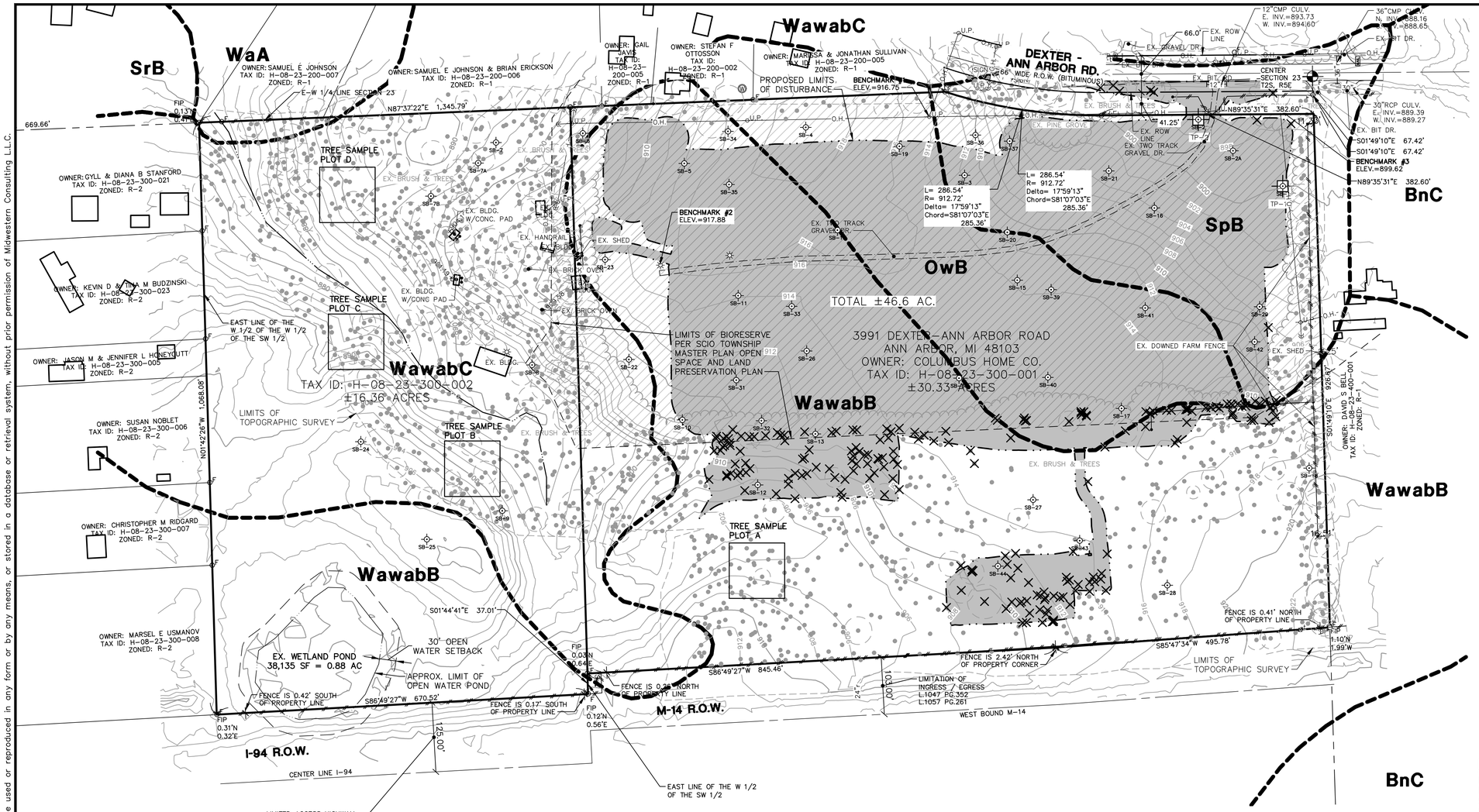

SCALE: 1" = 100'

0 100 200 300

LEGEND

- EXIST. CONTOUR
- EXIST. SPOT ELEVATION
- EXIST. UTILITY POLE
- GUY WIRE
- EXIST. OVERHEAD UTILITY LINE
- EXIST. GAS VALVE
- CULVERT
- C/L OF DITCH
- SIGN
- MAILBOX
- TELEPHONE RISER
- CABLE TELEVISION RISER
- FIBER OPTIC MARKER
- POST
- FENCE
- LIMITS OF DISTURBANCE
- OPEN WATER BOUNDARY
- OPEN WATER SETBACK
- SINGLE TREE
- LANDMARK TREE
- TREE OR BRUSH LIMIT
- FOUND IRON PIPE
- CONTROL PT.
- INFILTRATION TEST PITS
- SOIL BORINGS
- SOIL TYPE
- EXISTING TREE TO BE REMOVED

LEGAL DESCRIPTION

THE LAND REFERRED TO IN THIS COMMITMENT IS LOCATED IN THE TOWNSHIP OF SCIO, COUNTY OF WASHTENAW, STATE OF MICHIGAN, AND DESCRIBED AS FOLLOWS:

PARCEL 1:

THE EAST 1/2 OF THE SOUTHWEST 1/4 OF SECTION 23, TOWN 2 SOUTH, RANGE 5 EAST, SCIO TOWNSHIP, WASHTENAW COUNTY, MICHIGAN.

EXCEPT THAT PART LYING SOUTH OF A LINE 103 FEET NORTH OF MEASURED AT RIGHT ANGLES, AND PARALLEL WITH THE REFERENCE LINE OF WESTBOUND ROADWAY OF LIMITED ACCESS HIGHWAY M-14.

THE REFERENCE LINE OF WESTBOUND M-14 IS DESCRIBED AS FOLLOWS: COMMENCING AT THE WEST 1/4 CORNER OF SECTION 23, TOWN 2 SOUTH, RANGE 5 EAST; THENCE SOUTH 1 DEGREES 22' 21" EAST 1202.48 FEET ALONG SECTION LINE; THENCE NORTH 87 DEGREES 07' 17" EAST ALONG REFERENCE LINE OF I-94, 1328.13 FEET; THENCE NORTH 2 DEGREES 52' 43" WEST 59 FEET (ORIGINALLY RECORDED IN LIBER 1047, PAGE 352 AS 12 FEET THEN RE-RECORDED IN LIBER 1057, PAGE 261 AS 59 FEET) TO THE POINT OF BEGINNING; THENCE NORTH 87 DEGREES 07' 17" EAST 863.53 FEET; THENCE NORTH 86 DEGREES 05 '24" EAST 2666.55 FEET TO THE POINT OF CURVATURE OF A CURVE TO THE LEFT HAVING A CENTRAL ANGLE OF 39 DEGREES 08' 27" AND A RADIUS OF 1637.02 FEET; THENCE NORTHEAST ALONG THE ARC OF SAID CURVE 1118.31 FEET TO THE POINT OF TANGENT; THENCE NORTH 46 DEGREES 56' 57" EAST 61.22 FEET TO A POINT OF ENDING IN PROPOSED CENTERLINE OF DEXTER ROAD, SAID POINT OF ENDING LYING 436.63 FEET SOUTH 1 DEGREES 03' 04" WEST; THENCE 124.64 FEET SOUTH 79 DEGREES 34' 28" EAST; THENCE 436.22 FEET SOUTH 75 DEGREES 33' 02" EAST FROM THE WEST 1/4 CORNER OF SECTION 24, TOWN 2 SOUTH, RANGE 5 EAST, WASHTENAW COUNTY, MICHIGAN.

ALSO EXCEPTING A STRIP 2-1/2 RODS WIDE ALONG AND ADJOINING THE HIGHWAY ON THE SOUTH SIDE ACROSS THE NORTH END OF THE EAST 1/2 OF THE SOUTHWEST 1/4.

PARCEL 2:

THAT PARCEL OF LAND APPROXIMATELY 13.8 ACRES MORE OR LESS LYING NORTH OF EXISTING INTERSTATE HIGHWAY I-94 AND BEING A PART OF THE FOLLOWING DESCRIBED PREMISES:

THE EAST 1/2 OF THE WEST 1/2 OF THE SOUTHWEST 1/4 OF SECTION 23, TOWN 2 SOUTH, RANGE 5 EAST, SCIO TOWNSHIP, WASHTENAW COUNTY, MICHIGAN, LYING NORTH OF LAND CONVEYED BY H.C. COON, DEPUTY HIGHWAY COMMISSIONER OF THE STATE OF MICHIGAN TO H. ALBERT WENK AND EDWIN O. WENK BY DEED DATED MARCH 11, 1937, AND RECORDED JUNE 5, 1939 IN LIBER 3337 OF DEEDS, PAGE 341.

COMBINED PARCEL:

PART OF THE SOUTHWEST 1/4 OF SECTION 23, TOWN 2 SOUTH, RANGE 5 EAST, WASHTENAW COUNTY, MICHIGAN DESCRIBED AS: COMMENCING AT THE WEST 1/4 CORNER OF SAID SECTION; THENCE ALONG THE EAST-WEST 1/4 LINE OF SAID SECTION, NORTH 87 DEGREES 55' 12" EAST 669.66 FEET TO THE POINT OF BEGINNING, SAID POINT BEING THE NORTHWEST CORNER OF THE EAST 1/2 OF THE WEST 1/2 OF THE SOUTHWEST 1/4 OF SAID SECTION; THENCE CONTINUING ALONG SAID EAST-WEST 1/4 LINE, NORTH 87 DEGREES 55' 12" EAST 1345.79 FEET TO A POINT ON THE SOUTH LINE OF DEXTER ANN ARBOR ROAD; THENCE ALONG SAID SOUTH LINE THE FOLLOWING TWO (2) COURSES, 1) 286.54 FEET ALONG THE ARC OF A 912.72 FEET RADIUS CIRCULAR CURVE CONCAVE TO THE NORTHEAST, SAID CURVE HAVING A CENTRAL ANGLE OF 17 DEGREES 59' 13" AND A CHORD WHICH BEARS SOUTH 81 DEGREES 07' 03" EAST 285.36 FEET, AND 2) NORTH 89 DEGREES 53' 21" EAST 382.60 FEET TO A POINT ON THE NORTH-SOUTH 1/4 LINE OF SAID SECTION, SAID POINT LYING SOUTH 01 DEGREES 31' 20" EAST 67.42 FEET FROM THE CENTER OF SAID SECTION 23; THENCE ALONG SAID NORTH- SOUTH 1/4, SOUTH 01 DEGREES 31' 20" EAST 926.67 FEET TO THE NORTH LINE OF M-14 LIMITED ACCESS HIGHWAY; THENCE ALONG SAID NORTH LINE THE FOLLOWING TWO (2) COURSES, 1) SOUTH 86 DEGREES 05' 24" WEST 495.78 FEET AND 2) SOUTH 87 DEGREES 07' 17" WEST 845.46 FEET TO THE EAST LINE OF THE WEST 1/2 OF THE SOUTHWEST 1/4 OF SECTION 23; THENCE ALONG SAID EAST LINE SOUTH 01 DEGREES 26' 51" EAST 37.01 FEET TO THE NORTH LINE OF I-94, SOUTH 87 DEGREES 07' 17" WEST 670.52 FEET TO THE EAST LINE OF THE WEST 1/2 OF THE WEST 1/2 OF THE SOUTHWEST 1/4 OF SAID SECTION 23, THENCE ALONG SAID EAST LINE, NORTH 01 DEGREES 24' 36" WEST 1068.08 FEET TO THE POINT OF BEGINNING.

COMMONLY KNOWN AS: VACANT LAND - 3991 DEXTER-ANN ARBOR RD., ANN ARBOR, MI 48103.

The underground utilities shown have been located from field survey information and existing records. The surveyor makes no guarantees that the underground utilities shown comprise all such utilities in the area, either in-service or abandoned. The surveyor further does not warrant that the underground utilities shown are in the exact location indicated. Although the surveyor does certify that they are located as accurately as possible from the information available.

NATURAL FEATURES ASSESSMENT

THE SITE IS A FORMER KNIGHTS OF COLUMBUS CAMPGROUND WITH ASSOCIATED PAVILIONS AND OUTBUILDINGS. THE NORTHEASTERN PORTION OF THE SITE IS OPEN FIELD WITH AN EXISTING ACCESS ROUTE IN THE CENTRAL PORTION OF THE FIELD EXTENDING TO THE WEST. THE REMAINDER OF THE WESTERN AND SOUTHERN PORTION OF THE SITE IS WOODED WITH AN OPEN WATER WETLAND IN THE SOUTHWEST CORNER OF THE SITE. THE NATURAL FEATURES SITE ASSESSMENT HAS BEEN LIMITED TO ANTICIPATED LIMITS OF DISTURBANCE ON THE SITE.

PROMINENT VIEWS:
THERE IS AN EXISTING PAVILION WITHIN THE WOODED AREA THAT WILL BE PRESERVED WITH THE PROPOSED DEVELOPMENT. TREES AND BRUSH PROVIDE SCREENING BETWEEN OPEN FIELD AND I-94/M-14 CORRIDOR TO THE SOUTH.

WETLANDS/OPEN WATER:
AN OPEN WATER POND IS LOCATED IN THE SOUTHWESTERN CORNER OF THE SITE AND THE APPROXIMATE 30 FOOT WETLAND BUFFER HAS BEEN IDENTIFIED ON THE PLAN TO ILLUSTRATE NO PROPOSED IMPACTS TO THIS WATER FEATURE/WETLAND.

WATER FEATURES AND FLOODPLAIN:
THERE ARE NO WATERCOURSES IDENTIFIED ON THE SCIO TOWNSHIP WATER FEATURE AND WETLAND BUFFER MAP IN THE MASTER PLAN AND THERE IS NO FLOODPLAIN IDENTIFIED ON FEMA MAP 26161C0240E AND 26161C0241E DATED APRIL 3, 2012.
BASED ON TOPOGRAPHY, THERE IS A DRAINAGE PATH LOCATED WITHIN THE UNDISTURBED WOODED AREA ON THE WESTERN PORTION OF THE SITE WITH NO IMPACTS PROPOSED.

LANDMARK TREES AND WOODLAND:
A TREE SURVEY HAS BEEN PERFORMED FOR THE ANTICIPATED AREA OF DISTURBANCE AND HAS BEEN UTILIZED TO IDENTIFY FOUR SAMPLE PLOTS TO APPLY TOWARD WOODED AREAS THAT WERE NOT SURVEYED. THE WOODLAND IS IDENTIFIED AS A PRIORITY 3 BIORESERVE ON THE OPEN SPACE AND LAND PRESERVATION MAP IN THE SCIO TOWNSHIP MASTER PLAN.

STEEP SLOPES:
THERE ARE STEEP SLOPES RANGING FROM 1% TO 48% ALONG THE DRAINAGE PATH IN THE WESTERN PORTION OF THE SITE AS NOTED ABOVE.

THREATENED OR ENDANGERED SPECIES HABITAT:
NOT EVALUATED AT THIS TIME.

PROTECTED TREE SAMPLE PLOT CALCULATIONS

Existing Tree Plots				
Plot	Size (SF)	Total dbh	Total DBH LM	Total DBH Protected
A	10000	308"	15"	293"
B	10000	271"	93"	178"
C	10000	287"	93"	194"
D	10000	270"	18"	252"
	Average	284"	55"	229"
Non-surveyed Area		336564sf		
Area /10,000sf		34sf		
Approximated Total DBH of Non-surveyed area		**1843"**		**7716"**

BENCHMARK

BENCHMARK #1: SPIKE IN THE SOUTH SIDE OF A UTILITY POLE LOCATED ±130 FEET SOUTH OF DEXTER - ANN ARBOR RD. AND THE SECOND UTILITY POLE WEST OF THE GRAVEL / TWO TRACK DR. ENTRANCE TO PROPERTY.

ELEVATION = 916.75 (NAVD 88 DATUM)

BENCHMARK #2: SPIKE IN THE SOUTH SIDE OF THE MOST WESTERLY LIGHT POLE NORTH OF THE TWO TRACK DR. IN THE MIDDLE OF THE FIELD ±122 FEET EAST OF THE EASTERLY EDGE OF WOOD IN THE MIDDLE OF THE PROPERTY.

ELEVATION = 917.88 (NAVD 88 DATUM)

BENCHMARK #3: SPIKE IN THE SOUTHWEST SIDE OF A UTILITY POLE LOCATED ±68 FEET SOUTH OF THE CENTER LINE OF DEXTER - ANN ARBOR RD., THE MOST EASTERLY UTILITY POLE ON THE NORTH END OF THE PROPERTY AND AROUND THE NORTHEAST CORNER OF PROPERTY.

ELEVATION = 899.62 (NAVD 88 DATUM)

NOTE

1. THE BASE SURVEY WAS PREPARED BY MIDWESTERN CONSULTING IN NOVEMBER 2017 AND UPDATED IN APRIL 2021. SURVEY WAS LIMITED TO ANTICIPATED POTENTIAL IMPACTS. ALL UNDERGROUND UTILITIES AND STRUCTURES HAVE BEEN SHOWN TO A REASONABLE DEGREE OF ACCURACY AND IT SHALL BE THE CONTRACTOR'S RESPONSIBILITY TO VERIFY THEIR EXACT LOCATION AND TO AVOID DAMAGE THERETO. THE CONTRACTOR SHALL REPORT ANY DISCREPANCIES TO THE ENGINEER PRIOR TO COMMENCING WORK.
2. TREE SURVEY PERFORMED BY MIDWESTERN CONSULTING IN NOVEMBER 2017 AND UPDATED IN APRIL 2021. SURVEY WAS LIMITED TO ANTICIPATED POTENTIAL IMPACTS.
3. SEE TREE REMOVAL SHEETS FOR TREE TAG NUMBERS.

SOIL TYPE LEGEND

WASHTENAW COUNTY, MICHIGAN (MI161)
BnC - Boyer loamy sand, 6 to 12 percent slopes
OwB - Owosso-Miami complex, 2 to 6 percent slopes
SpB - Spinks loamy sand, 0 to 6 percent slopes
SrB - Spinks-Oshtemo loamy sands, 0 to 6 percent slopes
WaA - Wasepi sandy loam, 0 to 4 percent slopes
WawabB - Wawasee loam, 2 to 6 percent slopes
WawabC - Wawasee loam, 6 to 12 percent slopes

MIDWESTERN CONSULTING
3815 Plaza Drive, Ann Arbor, Michigan 48108
(734) 995-0200 • www.midwesternconsulting.com
Land Development • Land Survey • Institutional • Municipal
Wireless Communications • Transportation • Landfill Services

Know what's below. Call before you dig. 811

CLIENT
NORFOLK DEVELOPMENT CORPORATION
8178 JACKSON RD., SUITE D
ANN ARBOR, MI 48106
JIM HAEUSSLER
(734) 260-9678

3991 DEXTER-ANN ARBOR RD

PRELIMINARY PLANNED UNIT DEVELOPMENT
EXISTING CONDITIONS, BOUNDARY SURVEY AND REMOVALS PLAN

03

JOB No. 17310
DATE: 8/27/21
SHEET 03 OF 20
CADD: RWL
ENG: RWL2
PM: TJC
TECH:
17310EX1

REVISIONS:	REV. DATE
PER MUNICIPAL REVIEW	11/05/21

M:\Civil3d_Proj\17310\Prelim Plan\17310EX1.dwg, 11/8/2021 10:06 AM, Quinn C. Foster, 03 EXISTING CONDITIONS BOUNDARY SURVEY AND REMOVALS PLAN, MCLLC PDF.pc3
Copyright © 2021 Midwestern Consulting L.L.C. All rights reserved. No part of this drawing may be used or reproduced in any form or by any means, or stored in a database or retrievel system, without prior permission of Midwestern Consulting L.L.C.

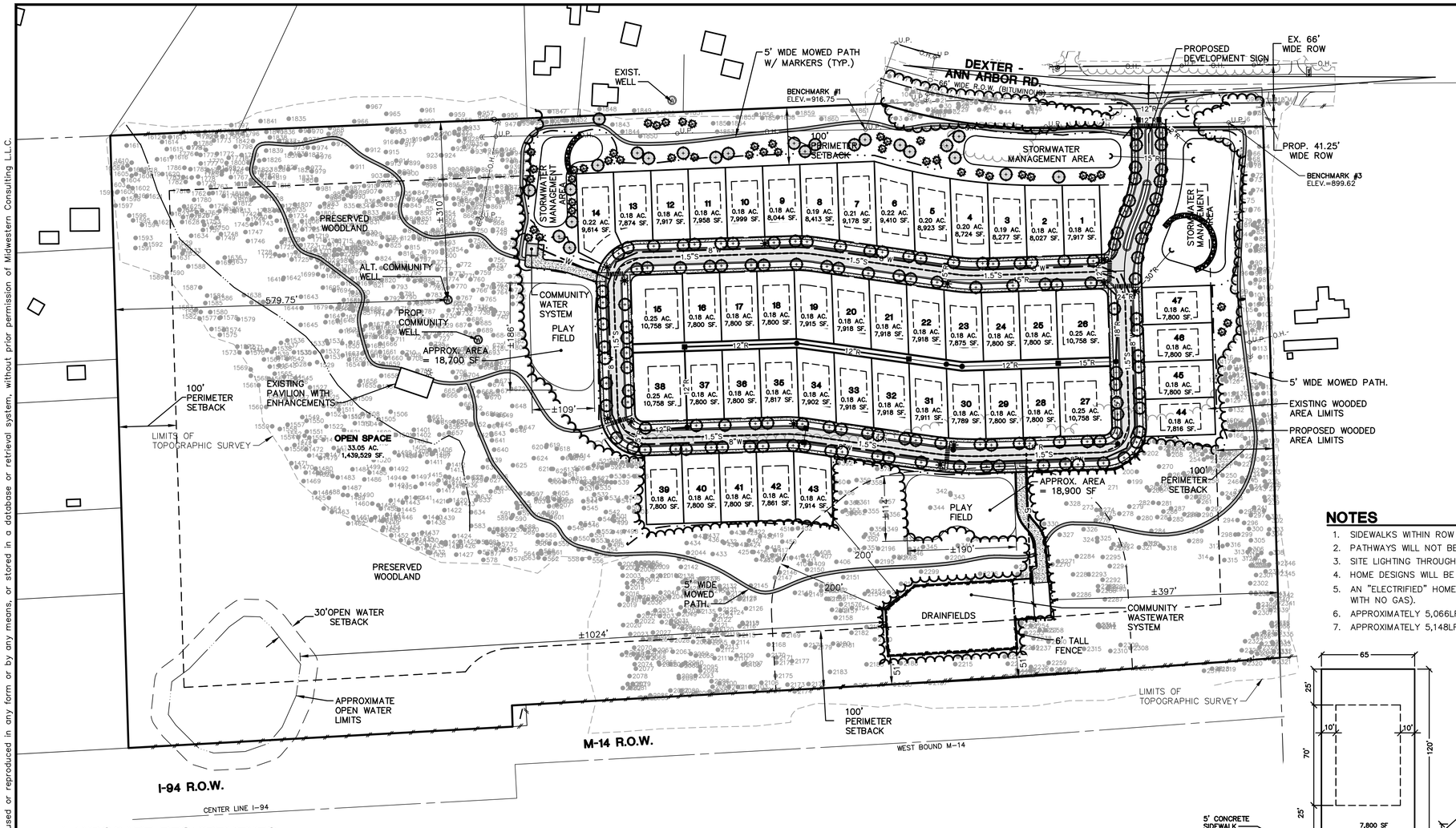

SCALE: 1" = 100'

0 100 200 300

LEGEND

- PROP. CURB & GUTTER
- PROP. BITUMINOUS PAVEMENT
- PROP. CONCRETE PAVEMENT
- PROP. PEDESTRIAN PATH
- SIDEWALK RAMP
- EXIST. WELL
- PROP. WELL
- SINGLE TREE
- TREE OR BRUSH LIMIT
- PROP. LOT BUILDING SETBACKS/ 100FT PERIMETER SETBACK
- TREE PRESERVATION LIMIT
- PROP. SANITARY SEWER
- PROP. STORM SEWER
- PROP. CATCH BASIN OR INLET
- END SECTION
- CULVERT
- PROP. LIGHTPOLE

NOTES

1. SIDEWALKS WITHIN ROW TO BE ADA ACCESSIBLE.
2. PATHWAYS WILL NOT BE ADA ACCESSIBLE.
3. SITE LIGHTING THROUGH THE DTE DIRECT LIGHTING PROGRAM
4. HOME DESIGNS WILL BE PROVIDED THAT INCLUDE OPTION FOR ELECTRICAL VEHICLE CHARGING IN THE GARAGE.
5. AN "ELECTRIFIED" HOME PLAN OPTION WILL BE AVAILABLE FOR POTENTIAL RESIDENTS TO CONSIDER (OPTION WITH NO GAS).
6. APPROXIMATELY 5,066LF OF PATHWAYS
7. APPROXIMATELY 5,148LF OF SIDEWALK

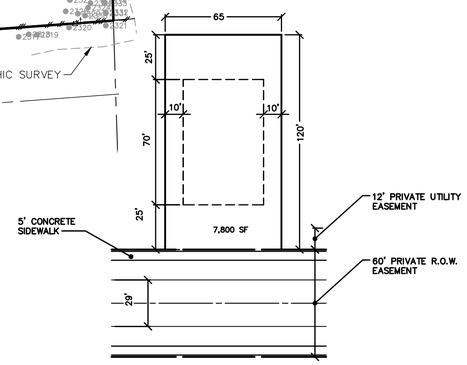

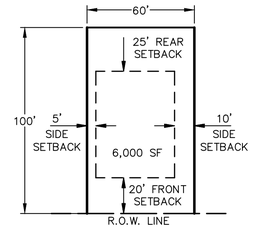

TYPICAL LOT DETAIL

NOT TO SCALE

SIMILARLY APP. PUD LOT SCIO TOWNSHIP

NOT TO SCALE

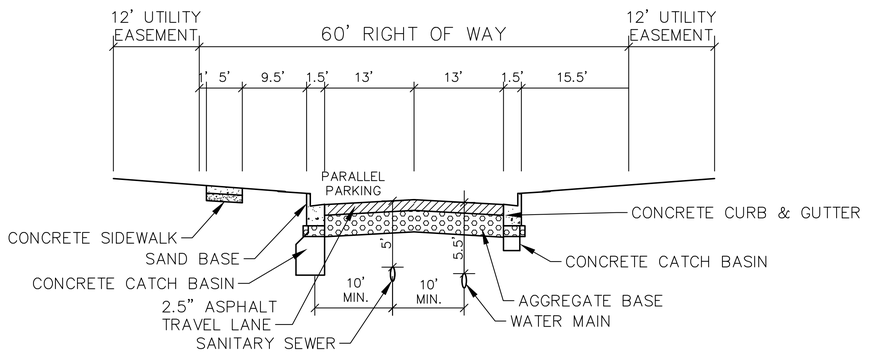

PRIVATE ROAD SECTION

NOT TO SCALE

LANDSCAPE REQUIREMENTS

	Required Landscaping	Calculations	Proposed Landscaping
Front Greenbelt	1 per 30 linear feet - trees 6 per 30 linear feet - shrubs	670lf = 23 trees, 134 shrubs	Existing and proposed trees - total 23 trees, 134 shrubs
Subdivision and condominium landscaping			
Street trees	1 per 40 linear feet	~5,236lf / 40 = 131 trees	131 trees along road corridors
Screening from public roads	6ft screening / 80% opacity		Existing and proposed front greenbelt plantings
Site Landscaping	25% site landscaping		>59% site - woodland preservation
Solid Waste	6ft ht masonry wall for trash enclosures	Not applicable	Individual bins per unit - stored in garages
Parking Lot			
interior islands	24 spaces per row, 1 island per 8 spaces for parking lots with 16+ spaces	Not applicable	Not applicable
interior island trees	1 tree per island	Not applicable	Not applicable
perimeter	screen from adjacent residential and public ROW	Not applicable	Not applicable
Foundation landscaping	1 ornamental tree, 6 shrubs per 30lf building frontage along ROW	Not applicable	Not applicable
Tree Mitigation			
Landmark Trees	50% DBH removed	Approximately 312" DBH removed x 0.50 = 156" DBH mitigation required = 63 trees (2.5" cal)*	Required mitigation trees will be installed on site within open space areas and/or perimeter setback
Protected Trees	20% removal without mitigation; 1 tree (2.5" cal. or 6'ht evergreen) per 6"dbh removed beyond 20%	Existing protected = 21,325" DBH 21,325" x 0.2 = 4,265" DBH removal without mitigation Approximately 1,336" removal = no mitigation required*	None

*Note: Approximate landmark and protected tree impacts are based on conceptual limits of disturbance, surveyed trees, and estimated tree impacts in areas that have not been surveyed. Tree impacts and required mitigation will be updated during grading refinement during final site plans. Tree mitigation will be provided for tree impacts to extent required by the Sco Township zoning ordinance.

NATURAL FEATURES IMPACT AND LANDSCAPE SUMMARY

THE CLUSTERED RESIDENTIAL LOT DEVELOPMENT MINIMIZES THE IMPACT TO NATURAL FEATURES ON THE SITE WITH RESIDENTIAL UNITS BEING PRIMARILY LOCATED WITHIN EXISTING OPEN FIELD. THE DEVELOPMENT PRESERVES APPROXIMATELY 27 ACRES OF WOODLAND (86% OF TOTAL WOODED AREAS) AND ASSOCIATED WETLAND/DRAINAGE PATTERNS, AND APPROXIMATELY 26,271 DBH INCHES Of THE ESTIMATED LANDMARK/PROTECTED TREES (93% OF TOTAL ESTIMATED LANDMARK/PROTECTED TREES) LOCATED ON THE SITE. IMPACTS TO LANDMARK AND PROTECTED TREES WILL BE MITIGATED AS REQUIRED PER TOWNSHIP ZONING ORDINANCE AND MITIGATION TREES WILL BE PLANTED WITHIN OPEN SPACE AND/OR THE PERIMETER SETBACK TO PROVIDE SCREENING FROM ADJACENT PROPERTIES.

THE DEVELOPMENT INCLUDES APPROXIMATELY 33 ACRES OF OPEN SPACE (71% OF THE SITE). OPEN SPACE BETWEEN RESIDENTIAL UNITS AND WITHIN PLAY FIELDS WILL BE MANICURED LAWN. THE REAR YARD SWALES AND STORMWATER MANAGEMENT BASINS WILL BE ESTABLISHED WITH NATIVE VEGETATION. REQUIRED TREES AND SHRUBS PER THE ZONING ORDINANCE WILL BE PLANTED ALONG THE DEXTER–ANN ARBOR ROAD FRONT GREENBELT AND REQUIRED STREET TREES WILL BE PLANTED ALONG THE ROAD NETWORK DISTRIBUTED THROUGHOUT THE DEVELOPMENT. ADDITIONALLY, THE EXISTING PAVILION WILL BE PRESERVED AND ADDITIONAL OPEN SPACE AMENITIES WILL BE DETERMINED DURING THE SITE PLANNING PROCESS. PEDESTRIAN PATHWAYS WILL BE INSTALLED WITHIN THE OPEN SPACE TO PROVIDE CONNECTIVITY AND PROMOTE RECREATIONAL AND SOCIAL GATHERING OPPORTUNITIES ON THE SITE.

PROPOSED OPEN SPACE

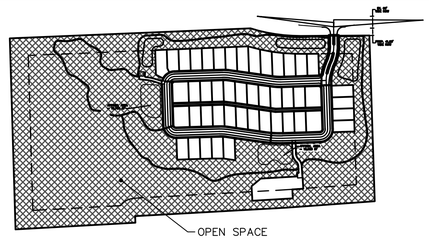

The underground utilities shown have been located from field survey information and existing records. The surveyor makes no guarantees that the underground utilities shown comprise all such utilities in the area, either in–service or abandoned. The surveyor further does not warrant that the underground utilities shown are in the exact location indicated. Although the surveyor does certify that they are located as accurately as possible from the information available.

M:\Civil\34_Proj\17310\Prelim PUD\17310SP1.dwg, 11/8/2021 10:06 AM, Quinn C. Foster, 04 OVERALL LAYOUT AND LANDSCAPE NARRATIVE, MCLLC PDF.pc3
Copyright © 2021 Midwestern Consulting L.L.C. All rights reserved. No part of this drawing may be used or reproduced in any form or by any means, or stored in a database or retrieval system, without prior permission of Midwestern Consulting, LLC.

Know what's below. Call before you dig. 811

MIDWESTERN CONSULTING
3815 Plaza Drive, Ann Arbor, Michigan 48108
(734) 995-0200 • www.midwesternconsulting.com
Land Development • Land Survey • Institutional • Municipal
Wireless Communications • Transportation • Landfill Services

CLIENT
NORFOLK DEVELOPMENT CORPORATION
8178 JACKSON RD., SUITE D
ANN ARBOR, MI 48108
JIM HAEUSSLER
(734) 260-9678

3991 DEXTER-ANN ARBOR RD

PRELIMINARY PLANNED UNIT DEVELOPMENT
OVERALL LAYOUT AND LANDSCAPE NARRATIVE

04

DATE: 8/27/21
SHEET 04 OF 20
CADD: RML
ENG: RML2
PM: UC
TECH:
17310SP1

JOB No. 17310

REVISIONS:	REV. DATE
PER MUNICIPAL REVIEW	11/05/21

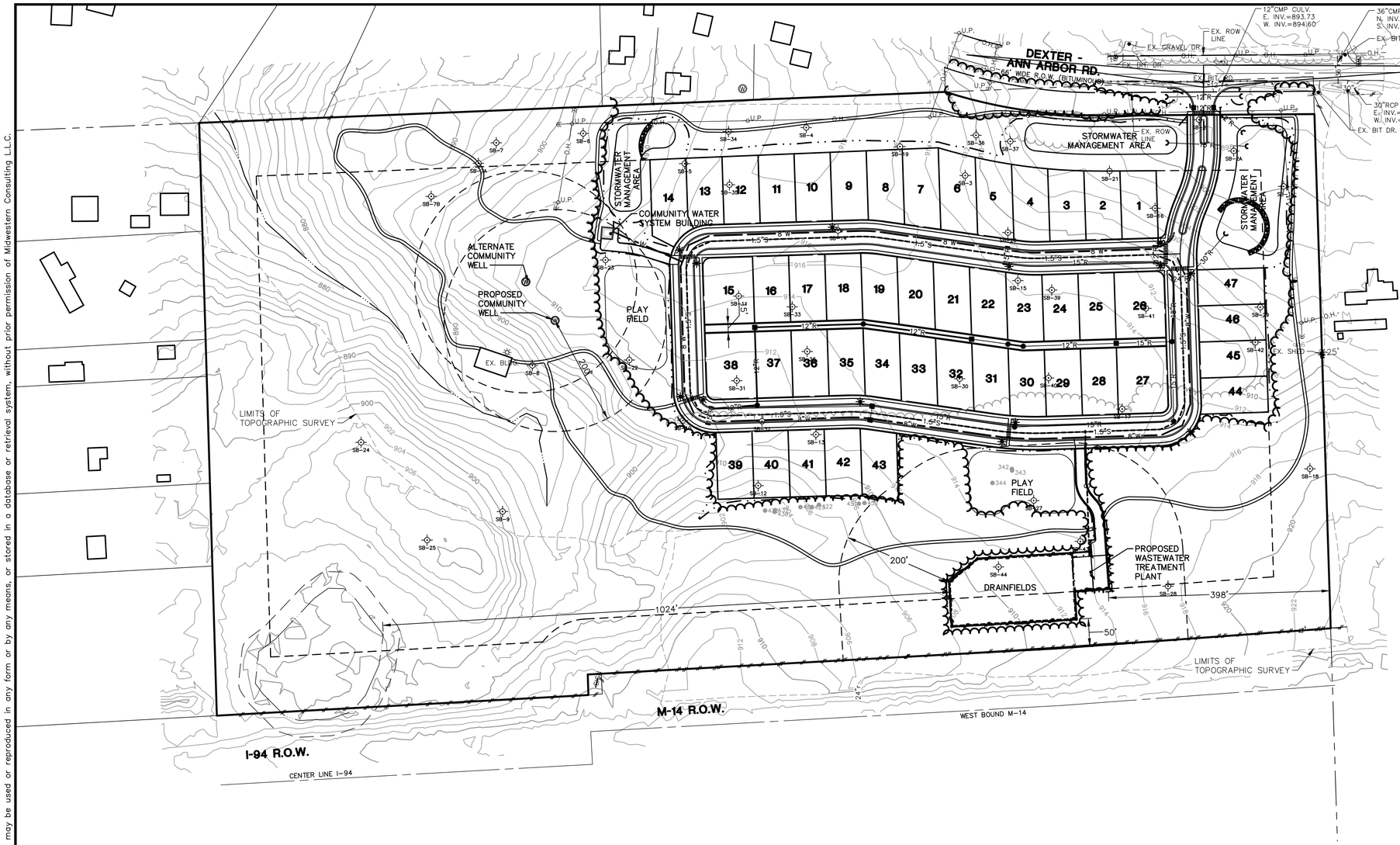

SCALE: 1" = 100'

0 100 200 300

LEGEND

- EXIST. CONTOUR
- PROP. CONTOUR
- U.P. EXIST. UTILITY POLE
- GUY WIRE
- ELEC. TRANSFORMER
- OH EXIST. OVERHEAD UTILITY LINE
- EXIST. LIGHT POLE
- t EXIST. TELEPHONE LINE
- e EXIST. ELECTRIC LINE
- g EXIST. GAS LINE
- s EXIST. SANITARY SEWER
- S PROP. SANITARY SEWER
- TELEPHONE RISER
- ELECTRIC METER
- WATER METER
- GAS METER
- GAS LINE MARKER
- r EXIST. STORM SEWER
- R PROP. STORM SEWER
- EXIST. CATCH BASIN OR INLET
- PROP. CATCH BASIN OR INLET
- END SECTION
- CULVERT
- PROP. COMMUNITY WELL
- SIGN
- MAILBOX
- FENCE
- GUARDRAIL
- POST
- TREE OR BRUSH LIMIT
- PROPOSED GRADING LIMITS

UTILITIES NOTES

1. SANITARY SEWER WILL BE DIRECTED TO THE WASTEWATER TREATMENT PLANT LOCATED ON-SITE WITH LOW PRESSURE SEWER SYSTEM USING ENVIRONMENT ONE GRINDER PUMPS OR APPROVED EQUIVALENT.
2. LOTS WILL BE SERVED BY A PRIVATELY OWNED COMMUNITY WELL THAT SHALL BE CONSTRUCTED PER SCIO TOWNSHIP STANDARDS.
3. NO HYDRANTS ARE PROPOSED AS A PART OF THE PRIVATE WATER SYSTEM.

COMMUNITY WASTEWATER FACILITY ISOLATION DISTANCES

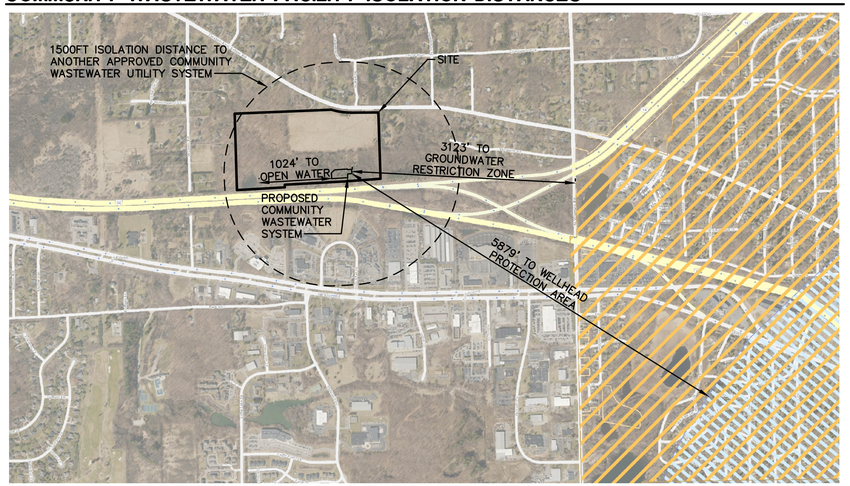

PRELIMINARY SANITARY SEWER BASIS OF DESIGN

Proposed 3991 Dexter-Ann Arbor Road - Sanitary Basis of Design

	Quantity	Unit	Usage Rate	Unit	Proposed Flow	
Occupants per House	3	EA	100	GPCPD	300	GPD
Total Units in Proposed Development	47			Total=	14,100	GPD
Proposed Average Daily Flow					14,100	GPD
					9.8	GPM
					0.022	CFS
Peaking Factor					4	
Proposed Peak Daily Flow					0.087	CFS
Proposed Peak Daily Flow					**39**	GPM

The underground utilities shown have been located from field survey information and existing records. The surveyor makes no guarantees that the underground utilities shown comprise all such utilities in the area, either in-service or abandoned. The surveyor further does not warrant that the underground utilities shown are in the exact location indicated. Although the surveyor does certify that they are located as accurately as possible from the information available.

M:\Civil3d_Proj\17310\Prelim Plat\17310P1.dwg, 11/8/2021 10:06 AM, Quinn C. Foster, 05 OVERALL UTILITY PLAN, MCLLC PDF.pc3
Copyright © 2021 Midwestern Consulting L.L.C. All rights reserved. No part of this drawing may be used or reproduced in any form or by any means, or stored in a database or retrieval system, without prior permission of Midwestern Consulting, L.L.C.

MIDWESTERN CONSULTING
385 Plaza Drive, Ann Arbor, Michigan 48108
(734) 995-0200 • www.midwesternconsulting.com
Land Development • Land Survey • Institutional • Municipal
Wireless Communications • Transportation • Landfill Services

CLIENT
NORFOLK DEVELOPMENT CORPORATION
8178 JACKSON RD., SUITE D
ANN ARBOR, MI 48108
JIM HAEUSSLER
(734) 260-9678

3991 DEXTER-ANN ARBOR RD

PRELIMINARY PLANNED UNIT DEVELOPMENT
OVERALL UTILITY PLAN

05

DATE: 8/27/21
SHEET 05 OF 20
CADD: RWL
ENG: RWL2
PM: TJC
TECH:
17310UP1

JOB No. **17310**

REVISIONS:	REV. DATE
PER MUNICIPAL REVIEW	11/05/21

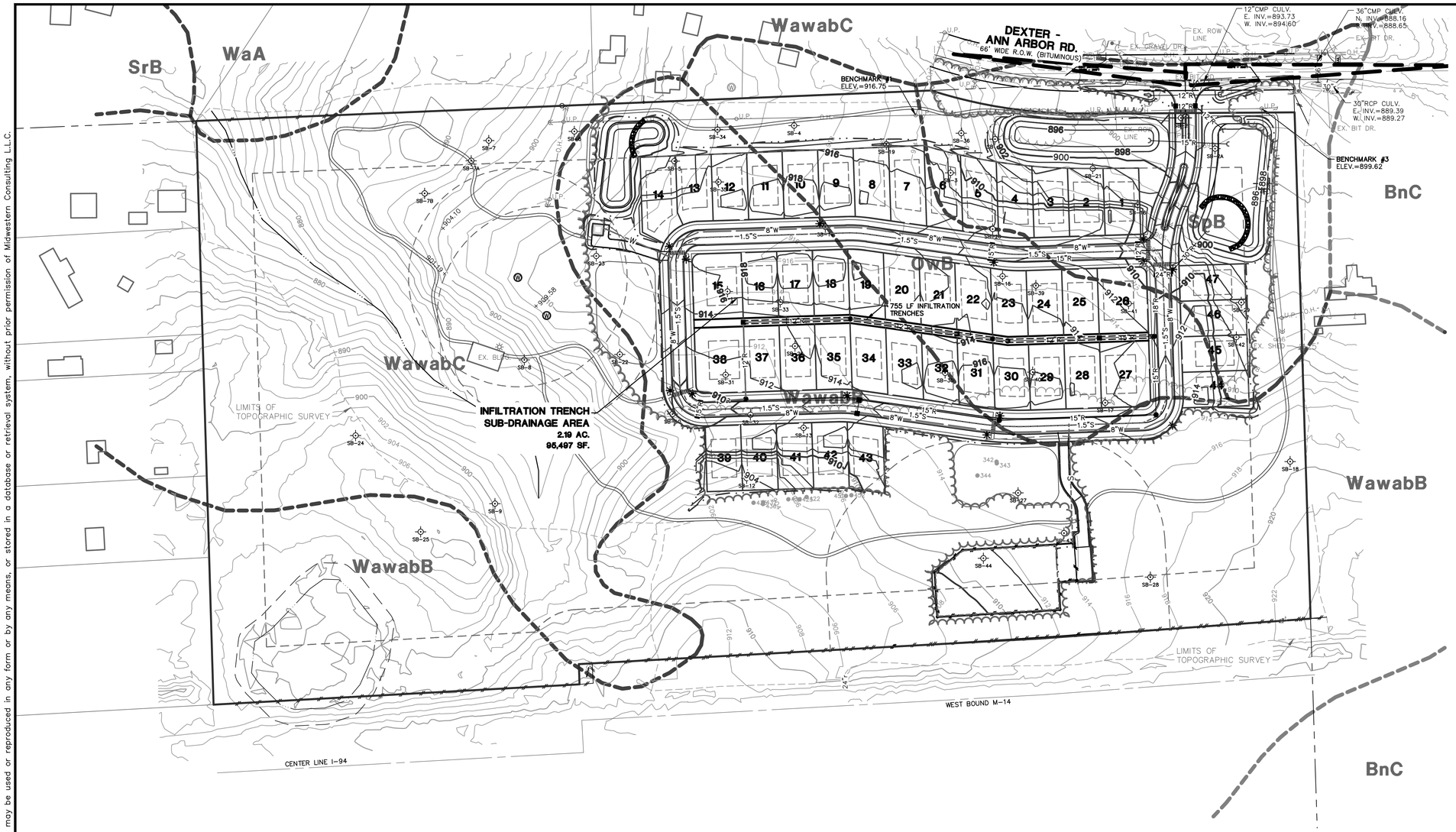

SCALE: 1" = 100'

0 100 200 300

LEGEND

- EXIST. CONTOUR
- PROP. CONTOUR
- EXIST. UTILITY POLE
- GUY WIRE
- ELEC. TRANSFORMER
- EXIST. OVERHEAD UTILITY LINE
- EXIST. LIGHT POLE
- EXIST. TELEPHONE LINE
- EXIST. ELECTRIC LINE
- EXIST. GAS LINE
- EXIST. SANITARY SEWER
- PROP. SANITARY SEWER
- TELEPHONE RISER
- ELECTRIC METER
- WATER METER
- GAS METER
- GAS LINE MARKER
- EXIST. STORM SEWER
- PROP. STORM SEWER
- EXIST. CATCH BASIN OR INLET
- PROP. CATCH BASIN OR INLET
- END SECTION
- CULVERT
- SIGN
- MAILBOX
- FENCE
- GUARDRAIL
- POST
- SINGLE TREE
- TREE OR BRUSH LIMIT
- PROPOSED GRADING LIMITS
- PROPOSED DRAINAGE LIMITS

Know what's below. Call before you dig. 811

SCALE: 1" = 30 FEET

The underground utilities shown have been located from field survey information and existing records. The surveyor makes no guarantees that the underground utilities shown comprise all such utilities in the area, either in-service or abandoned. The surveyor further does not warrant that the underground utilities shown are in the exact location indicated. Although the surveyor does certify that they are located as accurately as possible from the information available.

Copyright © 2021 Midwestern Consulting L.L.C. All rights reserved. No part of this drawing may be used or reproduced in any form or by any means, or stored in a database or retrieval system, without prior permission of Midwestern Consulting L.L.C.

M:\Civil3d_Proj\17310\Prelim PUD\17310P1.dwg, 11/8/2021 10:07 AM, Quinn C. Foster, 06 PRELIMINARY GRADING PLAN, MCLLC PDF.pc3

MIDWESTERN CONSULTING
3815 Plaza Drive, Ann Arbor, Michigan 48108
(734) 995-0200 • www.midwesternconsulting.com
Land Development • Land Survey • Institutional • Municipal
Wireless Communications • Transportation • Landfill Services

CLIENT
NORFOLK DEVELOPMENT CORPORATION
8178 JACKSON RD., SUITE D
ANN ARBOR, MI 48108
JIM HAEUSSLER
(734) 260-9678

3991 DEXTER-ANN ARBOR RD

PRELIMINARY PLANNED UNIT DEVELOPMENT
PRELIMINARY GRADING PLAN

06

JOB No. 17310

REVISIONS:
PER MUNICIPAL REVIEW — REV. DATE 11/05/21

DATE: 8/27/21
SHEET 06 OF 20
CADD:
ENG: RML2
PM: TJC
TECH:
/17310P1

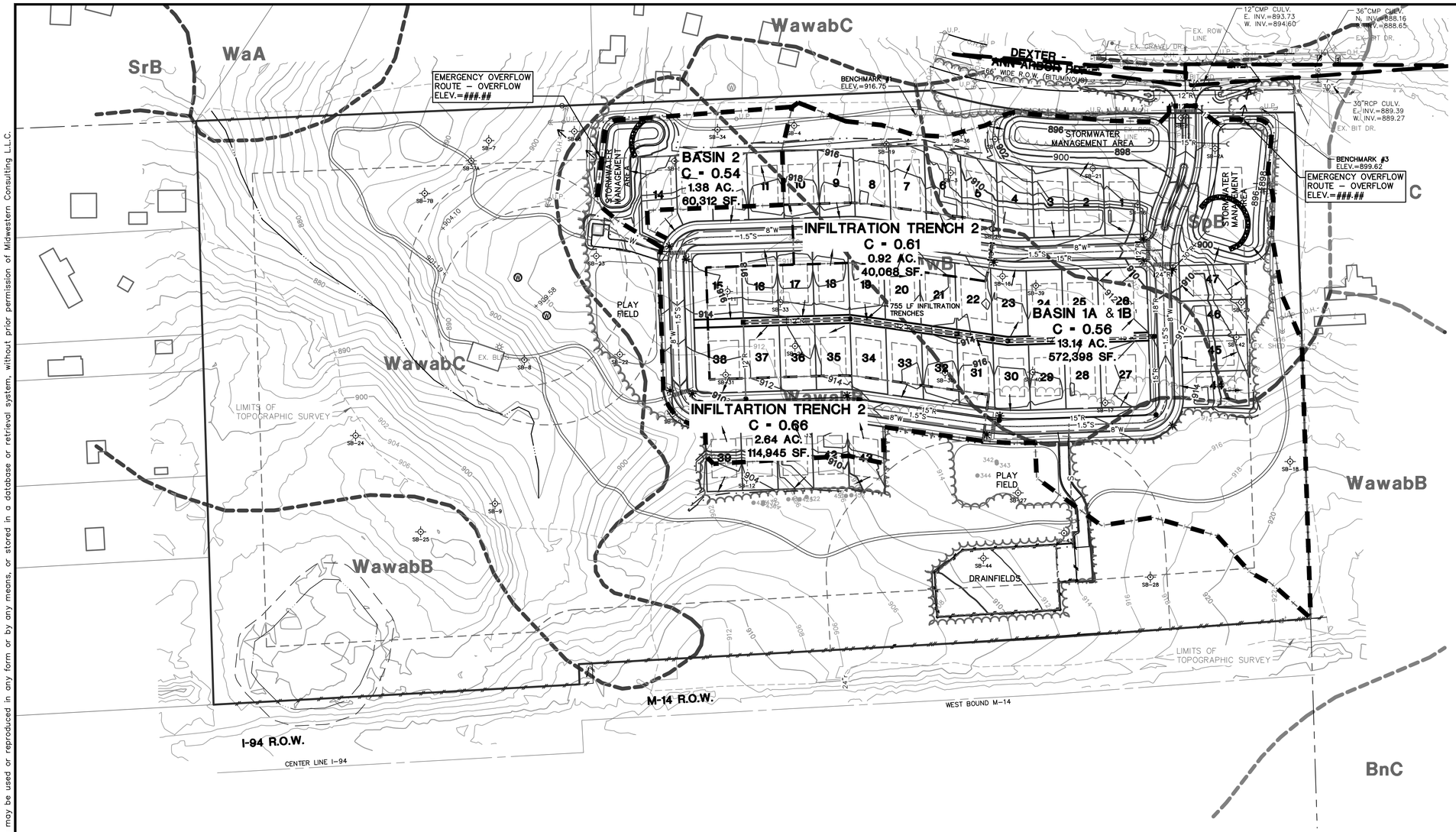

SCALE: 1" = 100'

0 100 200 300

LEGEND

- EXIST. CONTOUR
- PROP. CONTOUR
- EXIST. UTILITY POLE
- GUY WIRE
- ELEC. TRANSFORMER
- EXIST. OVERHEAD UTILITY LINE
- EXIST. LIGHT POLE
- EXIST. TELEPHONE LINE
- EXIST. ELECTRIC LINE
- EXIST. GAS LINE
- EXIST. SANITARY SEWER
- PROP. SANITARY SEWER
- TELEPHONE RISER
- ELECTRIC METER
- WATER METER
- GAS METER
- GAS LINE MARKER
- EXIST. STORM SEWER
- PROP. STORM SEWER
- EXIST. CATCH BASIN OR INLET
- PROP. CATCH BASIN OR INLET
- END SECTION
- CULVERT
- SIGN
- MAILBOX
- FENCE
- GUARDRAIL
- POST
- SINGLE TREE
- TREE OR BRUSH LIMIT
- PROPOSED GRADING LIMITS
- PROPOSED DRAINAGE LIMITS

STORM WATER NARRATIVE

THE FOLLOWING STATEMENTS HAVE BEEN PREPARED USING PRELIMINARY STORM WATER CALCULATIONS AND DATA COLLECTED FROM THE SITE. THE PRELIMINARY DESIGN IS IN ACCORDANCE WITH THE 2016 WCWRC RULES AND GUIDELINES MANUAL TO DEVELOP IN WASHTENAW COUNTY, THESE RULES REQUIRE STORM WATER DETENTION AND INFILTRATION, IF FEASIBLE.

EXISTING CONDITIONS:
THE SITE CURRENTLY CONTAINS NO STORM WATER TREATMENT OR DETENTION FACILITIES. APPROXIMATELY 12 ACRES OF THE SITE SHEET FLOWS TOWARD THE NORTHEAST CORNER AND INTO THE DEXTER–ANN ARBOR ROAD RIGHT–OF–WAY. APPROXIMATELY 31.2 ACRES FLOWS TOWARD A DRAINAGE DITCH THE STARTS TO FORM NEAR THE WESTERN THIRD OF THE PROPERTY AND CONVEYS RUNOFF TO THE NORTHWEST CORNER, CONTINUING OFF–SITE. APPROXIMATELY 3.5 ACRES NEAR THE SOUTHWEST CORNER FLOWS INTO AN EXISTING OPEN WATER POND THAT EXISTS MOSTLY JUST NORTH OF THE I–94 RIGHT–OF–WAY.

PROPOSED CONDITIONS:
THE PROPOSED DEVELOPMENT INCLUDES NEW IMPERVIOUS BUILDING ROOF, PAVEMENT, AND SIDEWALK AREAS ESTIMATED AT APPROXIMATELY 5.7 ACRES. RUNOFF FROM APPROXIMATELY 17 ACRES OF PROPOSED DEVELOPED AREA (INCLUDING 5.4 ACRES OF IMPERVIOUS BUILDING/PAVEMENT AREA) IS DESIGNED TO BE CONVEYED THROUGH THE PROPOSED STORM SEWER NETWORK, OR TO FLOW OVER LAND TOWARD ONE OF TWO HYDRAULICALLY CONNECTED INFILTRATION BASINS AT THE NORTHEAST CORNER OF THE SITE

PORTIONS OF THE PROPOSED LOTS, BUILDING ROOFS, PAVEMENT, AND SIDEWALK AREAS (ROUGHLY 2.3 ACRES) WILL FLOW INTO 2 INFILTRATION TRENCHES UNDER PROPOSED ROADS BEFORE ULTIMATELY FLOWING TOWARD THE MAIN INFILTRATION BASINS.

THE INFILTRATION BASINS ARE DESIGNED TO FULLY INFILTRATE THE 100–YEAR STORM FOR THEIR TRIBUTARY AREA. AN EMERGENCY OVERFLOW ROUTE WILL OCCUR NEAR THE NORTHEAST CORNER OF THE PROPERTY WHICH WILL ALLOW WATER TO DISCHARGE INTO THE DEXTER–ANN ARBOR ROAD RIGHT–OF–WAY.

APPROXIMATELY 1.38 ACRES, CONSISTING OF (4) PROPOSED LOTS, WILL FLOW TOWARD A DETENTION BASIN AT THE NORTHWEST CORNER OF THE DEVELOPMENT. THE SOILS ENCOUNTERED IN THIS AREA WERE NOT FOUND TO EXHIBIT CAPACITY FOR INFILTRATION. THEREFORE THE BASIN IS DESIGNED TO DETAIN VOLUME EQUAL TO 120% OF THE 100–YEAR STORM FOR THIS TRIBUTARY AREA. THE DETENTION BASIN WILL INCLUDE AN OUTLET CONTROL STRUCTURE THAT WILL ALLOW STORM WATER TO BE DETAINED IN THE BASIN AND DISCHARGE AT A CONTROLLED RATE. THE DISCHARGE WILL OCCUR ON THE WEST SIDE OF THE BASIN, ALLOWING WATER TO FLOW GENERALLY TO THE NORTHWEST AND EVENTUALLY TOWARD THE EXISTING DRAINAGE DITCH AND OFF–SITE.

NO OPPORTUNITY TO INFILTRATE OR CAPTURE RUNOFF FOR 5 REAR LOTS "39–42". PROPOSED RUNOFF MATCHES THE EXISTING DRAINAGE PATTERN TO AN EXISTING LOW AREA WITH–IN THE PROPERTY BOUNDARY.

PORTIONS OF LAND THAT ARE NOT TO BE DEVELOPED WITH HOMES, ROADWAYS, OR SIDEWALKS WILL CONTINUE TO DRAIN AS THEY DO TODAY – EITHER TOWARD THE EXISTING DRAINAGE DITCH OR TOWARD THE EXISTING OPEN WATER POND.

The underground utilities shown have been located from field survey information and existing records. The surveyor makes no guarantees that the underground utilities shown comprise all such utilities in the area, either in–service or abandoned. The surveyor further does not warrant that the underground utilities shown are in the exact location indicated. Although the surveyor does certify that they are located as accurately as possible from the information available.

WCRC ENTRANCE DETAIL

SCALE: 1" = 30 FEET

Know what's below. Call before you dig.

MIDWESTERN CONSULTING
3815 Plaza Drive, Ann Arbor, Michigan 48108
(734) 995-0200 • www.midwesternconsulting.com
Land Development • Land Survey • Institutional • Municipal
Wireless Communications • Transportation • Landfill Services

CLIENT
NORFOLK DEVELOPMENT CORPORATION
8178 JACKSON RD., SUITE D
ANN ARBOR, MI 48108
JIM HAEUSSLER
(734) 260–9678

3991 DEXTER-ANN ARBOR RD

PRELIMINARY PLANNED UNIT DEVELOPMENT
PRELIMINARY STORMWATER DRAINAGE PLAN

07

DATE: 8/27/21
SHEET 07 OF 20
CADD: RML
ENG: RML2
PM: TJC
TECH:
/17310DR1

JOB No. 17310

REVISIONS:	REV. DATE
PER MUNICIPAL REVIEW	11/05/21

M:\Civil3d_Proj\17310\Prelim PUD\17310DR1.dwg, 11/8/2021 10:07 AM, Quinn C. Foster, 07 PRELIMINARY STORMWATER DRAINAGE PLAN, MCLLC PDF.pc3
Copyright © 2021 Midwestern Consulting L.L.C. All rights reserved. No part of this drawing may be used or reproduced in any form or by any means, or stored in a database or retrieval system, without prior permission of Midwestern Consulting L.L.C.

M:\Civil3d_Pro\17310\Plan Pkg\17310DR1.dwg, 11/8/2021 10:07 AM, Quinn C. Foster, STORMWATER CALCULATIONS 1 OF 2, MCLLC PDF pc3
Copyright © 2021 Midwestern Consulting, L.L.C. All rights reserved. No part of this drawing may be used or reproduced in any form or by any means, or stored in a database or retrieval system, without prior permission of Midwestern Consulting, L.L.C.

Northeast Infiltration Basins

Rev 11/5/2021

W1 - Determining Post-Development Cover Types, Areas, Curve Numbers, and Runoff Coefficients

Rational Method Variables

Cover Type	Soil Type	Area (sft)	Area (ac)	Runoff Coeff. (C)	(C) x (Area)
Building/Driveways		105,760	2.43	0.95	2.31
Pavement/Sidwalk/paths		102,102	2.34	0.95	2.23
Grass	A (4-8% slopes)	85,884	1.97	0.2	0.39
Grass	B (4-8% slopes)	128,826	2.96	0.30	0.89
Grass	B (>8% slopes)	128,826	2.96	0.35	1.04
Water Surface		21,000	0.48	1.00	0.48
Total		572,399	13.14		7.33
			Weighted C = (Sum(C)x(Area))/(Area Total)=		0.56

NRCS Variables (Pervious)

Cover Type	Soil Type	Area (sft)	Area (ac)	Curve Number	(CN) x (Area)
Grass	A	85,884	1.97	39	0.77
Grass	B	257,653	2.96	61	1.80
Total		343,537	7.89		2.57
			Weighted CN = (Sum(CN)x(Area))/(Area Total)=		33

NCRS Variables (Impervious)

Cover Type	Soil Type	Area (sft)	Area (ac)	Curve Number	(CN) x (Area)
Building/Driveways		105,760	2.43	98	2.38
Pavement/Sidwalk/paths		102,102	2.34	98	2.30
Water Surface		21,000	0.48	98	0.47
Total		228,862	5.25		5.15
			Weighted CN = (Sum(CN)x(Area))/(Area Total)=		98

W2 - W2 - First Flush Runoff Calculations (Vff)

A. Vff = 1" x 1'/12" x 43560 sft/ac x A x C — where A= 13.14 — and where C= 0.56

Vff = 1" x 1'/12" x 43560 sft/ac x 13.14 x 0.56 = 26,712 cf

W3 - W3 - Pre-Development Bankfull Runoff Calculations (Vbf-pre)

A. 2 year / 24 hour storm event: P= 2.35 in
B. Pre-Development CN (Meadow, 25% Type A, 75% Type B, 0% Type C, 0% Type D, Soils) CN= 51
C. S = (1000 / CN) - 10 S= 9.606 in
D. Q = [(P-0.2S)^2] / [P+0.8S] Q= 0.018 in
E. Total Site Area excluding "Self-Crediting" BMPs 572,399 sft
F. $V_{bf\text{-}pre}$ = Q x (1/12) x Area $V_{bf\text{-}pre}$ = 872 cft

W4 - Pervious Cover Post-Development Bankfull Runoff Calculations (Vbf-per-post)

A. 2 year / 24 hour storm event: P= 2.35 in
B. Pervious Cover CN From Worksheet 1 CN= 33
C. S = (1000 / CN) - 10 S= 20.651 in
D. Q = [(P-0.2S)^2] / [P+0.8S] Q= 0.000 in
E. Pervious Cover Area from Worksheet 1 343,537 sft
F. $V_{bf\text{-}per\text{-}post}$ = Q x (1/12) x Area $V_{bf\text{-}per\text{-}post}$ = 0 cft

W5 - W5 - Impervious Cover Post-Development Bankfull Runoff Calculations (Vbf-imp-post)

A. 2 year / 24 hour storm event: P= 2.35 in
B. Impervious Cover CN From Worksheet 1 CN= 98
C. S = (1000 / CN) - 10 S= 0.204 in
D. Q = [(P-0.2S)^2] / [P+0.8S] Q= 2.122 in
E. Impervious Cover Area from Worksheet 1 228,862 sft
F. $V_{bf\text{-}imp\text{-}post}$ = Q x (1/12) x Area $V_{bf\text{-}imp\text{-}post}$ = 40,464 cft

W6 - W6 - Pervious Cover Post-Development 100-Year Runoff Calculations (V100-per-post)

A. 100 year / 24 hour storm event: P= 5.11 in
B. Pervious Cover CN From Worksheet 1 CN= 33
C. S = (1000 / CN) - 10 S= 20.651 in
D. Q = [(P-0.2S)^2] / [P+0.8S] Q= 0.044 in
E. Pervious Cover Area from Worksheet 1 343,537 sft
F. $V_{100\text{-}per\text{-}post}$ = Q x (1/12) x Area $V_{100\text{-}per\text{-}post}$ = 1,270 cft

W7 - W7 - Impervious Cover Post-Development 100-Year Runoff Calculations (V100-imp-post)

A. 100 year / 24 hour storm event: P= 5.11 in
B. Impervious Cover CN From Worksheet 1 CN= 98
C. S = (1000 / CN) - 10 S= 0.204 in
D. Q = [(P-0.2S)^2] / [P+0.8S] Q= 4.873 in
E. Impervious Cover Area from Worksheet 1 228,862 sft
F. $V_{bf\text{-}imp\text{-}post}$ = Q x (1/12) x Area $V_{100\text{-}imp\text{-}post}$ = 92,937 cft

W8 - Time of Concentration (Tc-hrs)

A. Assume 15-minute minimum time of concentration Tc= 0.25 hr

W9 - Runoff Summary & On-Site Infiltration Requirement

A. Summary from Previous Worksheets
First Flush Volume (Vff) **26,712 cft**
Pre-Development Bankfull Runoff Volume (Vbf-pre) **872 cft**
Pervious Cover Post-Development Bankfull Volume (Vbf-per-post) *0 cft*
Impervious Cover Post-Development Bankfull Volume (Vbf-imp-post) *40,464 cft*
Total BF Volume (Vbf-post) **40,464 cft**
Pervious Cover Post-Development 100-Year Volume (V100-per-post) *1,270 cft*
Impervious Cover Post-Development 100-Year Volume (V100-imp-post) *92,937 cft*
Total 100-Year Volume (V100) **94,207 cft**
B. Determine Onsite Infiltration Requirement
Subtract the Pre-Development Bankfull from the Post-Development Bankfull Volume
Total Post-Development Bankfull Volume (Vbf-post) 40,464 cft
Pre-Development Bankfull Runoff Volume (Vbf-pre) 872 cft
Bankfull Volume Difference **39,592 cft**
Infiltration Requirement (Vinf) **39,592 cft**

W10 - Detention/Retention Requirement

A. Q_p = 238.6 Tc^0.82 743.63 cfs/(in x sq. mi)
B. Total Site Area excluding "Self-Crediting" BMPs 13.14 ac
C. Q_{100} = $Q_{100\text{-}per}$ + $Q_{100\text{-}imp}$ 4.917 in
(from W6 and W7, respectively)
D. Peak Flow (PF) = Q_p x Q_{100} x Area / 640 75.08 cfs
E. Delta = PF - 0.15 x Area (ac) 73.11 cfs
[0.15 x Area (ac)] *1.97 cfs*
F. V_{det} = Delta / PF x V_{100} 91,734 cft
Required Detention not including infiltration credit or penalty.
Sediment Forebay Volume Required (5% of V100) 4,710 cft

W11 - Determine Applicable BMPs and Associated Volume Credits

		Storage Volume (cft)			Infilt. Volume in 6-hr	Total Volume
Proposed BMP	Area (sft)	Surface	In Soil	Design Infilt. Rate (in/hr)	Drawdown (cft)	Reduction (cft)
Infiltration Basin	28,563	98,766	0	10.00	142,815	241,581
				Total Volume Reduction Credit by Proposed Structural BMPs (cft)		91,734
				Runoff Volume Infiltration Requirement (Vinf) from W9 (cft)		39,592
				Runoff Volume Credit (cft)		52,142

W13 - Site Summary of Infiltration & Detention

A. Stormwater Management Summary
Min Infiltration Requirement (Vinf) 39,592 cft
Designed/Provided Infiltration Volume 91,734 cft
% Minimum Required Infiltration Provided 232 %
Total Calculated Detention Volume, Vdet 91,734 cft
Net Required Detention Volume 0 cft
(Vdet - Designed/Provided Infiltration Volume)

B. Detention Volume Increase for sites where the required infiltration volume cannot be achieved.
% Required Infiltration NOT Provided 0.0 %
(100% - % Minimum Required Infiltration Provided)
Net % Penalty (20% x % Required Infiltration NOT Provided) 0.0 %
Total Required Detention Volume, including penalty **0 cft**
[(100% + Net % Penalty) x Net Required Detention Volume)]

Detention Outlet Calculations

A. Required Detention Volumes (Reduced by 6-hour infiltration)

Storm Event	Req'd Volume	less	Infil. Credit	=	Final Volume
First Flush	26,712 cft	-	142,815 cft	=	**0** cft
Bankfull	40,464 cft	-	142,815 cft	=	**0** cft
100 -year	91,734 cft	-	142,815 cft	=	**0** cft
100-year + Req'd Penalty	- cft	-	142,815 cft	=	**0** cft
Forebay Volume Required (5% of 100-yr)				=	**4,710** cft

B. Detention Volumes Provided

Infiltration Basin A

Elevation	Area (sft)	Depth (ft)	Volume (cft)	Cum. Volume (cft)
895.0	4,646	0.0	0	0
896.0	7,515	1.0	6,132	6,132
897.0	10,342	1.0	8,891	15,023
898.0	13,325	1.0	11,802	26,825
898.5	14,876	0.5	7,047	33,872
899.0	16,466	0.5	7,832	41,704
899.5	18,095	0.5	8,637	50,341
			Total Volume =	33,872

Infiltration Basin B

Elevation	Area (sft)	Depth (ft)	Volume (cft)	Cum. Volume (cft)
895.0	13,528	0.0	0	0
896.0	16,288	1.0	14,887	14,887
897.0	19,205	1.0	17,726	32,613
898.0	22,280	1.0	20,723	53,337
898.5	23,876	0.5	11,537	64,873
899.0	25,512	0.5	12,345	77,218
899.5	27,186	0.5	13,172	90,390
			Total Volume =	64,873

Combined Basins (Hydraulically Connected)

Elevation	Area (sft)	Depth (ft)	Volume (cft)	Cum. Volume (cft)
895.0	18,374	0.0	0	0
896.0	23,803	1.0	21,030	21,030
897.0	29,547	1.0	26,623	47,653
898.0	35,605	1.0	32,529	80,182
898.5	38,752	0.5	18,584	98,766
899.0	41,978	0.5	20,177	118,943
899.5	45,281	0.5	21,810	140,753
			Total Volume =	98,766

C. Full Infiltration Design

Total Storage Volume 91,734 cft
Infiltration Area 28563 sft
Infiltration Rate, Average 10.00 in/hr
Infiltration Flow Rate 23802.50 cft/hr
Time to Fully Drain **3.9 hr**

This is less than 48 hours max, so the basin complies with the drawdown requirement.

Storage Elevation Calculation

First Flush Elevation (Xff)= 897.0 - 896.0 = Xff - 896.0 Xff = 896.21 ft
47,653 - 21,030 = 26,712 - 21,030

Bankfull Elevation (Xbf)= 897.0 - 896.0 = Xbf - 896.0 Xbf = 896.73 ft
47,653 - 21,030 = 40,464 - 21,030

100-Year Elevation (X100)= 898.5 - 898.0 = X_{100} - 898.0 X100 = 898.31 ft
98,766 - 80,182 = 91,734 - 80,182

Freeboard (X100)+1 1' Freeboard = 899.31 ft

February 6, 2018
G2 Project No. 183022
Page 3

following periods of prolonged precipitation.

INFILTRATION CONSIDERATIONS

The following table provides the results of our observations during test pit operations:

Test Pit No.	Ground Surface Elevation (ft)[1]	Ground Water Elevation (ft)[2]	Test Elevation (ft)	Soil Type (USCS)[3]	Observed Infiltration Rate (iph)	Design Infiltration Rate (iph)[4]
TP-1	900	Dry	895	Sand with tr. silt (SP)	26.75	13.4
TP-2	899	Dry	894	Gravelly Sand (SM)	84.38	42.2
TP-3	891	Dry	883	Silty Sand (SM)	0.38	0.2
TP-4	889	Dry	882	Silty Sand (SM)	0.0	0.0

Notes: 1. Estimated based on available topographical information within Google Earth Pro.
2. Estimated at completion of excavation operations and not including perched groundwater..
3. Description in general accordance with Visual-Manual Unified Soil Classification System (ASTM D2488).
4. Infiltration rate (inches per hour) given using a design factor of safety of 2.

The resulting infiltration rates were calculated and equated to an effective infiltration rate over the period of one hour. A factor of safety of 2.0 has been used in presenting the design infiltration rate. Furthermore, it should be noted that the calculated infiltration rates do not include a reduction factor (Rf) due to the recent revisions within the WCWRC guidelines for testing.

Based on the results of our infiltration evaluation, we recommend the proposed infiltration basins be constructed to bear within the test elevations identified at the test pit locations within TP-1 and TP-2. We do not anticipate suitable infiltration will be available within the area of TP-3 and TP-4. Discrepancies between the design infiltration rate and the observed soil types can be attributed to the percentage of material passing the No. 200 sieve in addition to the in-situ relative density of the encountered soil types. Please refer to the sieve analysis presented in Figure No. 5 and test pit log Figure No. 3 in the appendix for the percentage of material passing the No. 200 sieve at the infiltration test elevations.

We recommend that a qualified geotechnical engineer or technician be present on-site during the excavation of the infiltration structure to verify that soils at the base of the proposed structure are consistent with soil conditions identified within this report.

GENERAL COMMENTS

If changes occur in the design, location, or concept of the project, conclusions and recommendations contained in this report are not valid unless G2 Consulting Group, LLC reviews the changes. G2 Consulting Group, LLC will then confirm any assumptions regarding the project scope presented herein or make changes in writing. The scope of the present investigation was limited to evaluation of subsurface conditions at the proposed test pit locations. No chemical or environmental testing or analyses were included in the scope of this investigation.

We base the analyses and recommendations submitted in this report upon the data from the test pits performed at the approximate locations shown on the Test Pit Location Plan, Plate No. 1. This report does not reflect variations that may occur between the actual test pit location and the actual infiltration basin location. The nature and extent of any such variations may not become clear until the time of construction. We recommend G2 Consulting Group, LLC observe all geotechnical related work, including subgrade preparation and engineered fill placement.

We appreciate the opportunity to be of service to Midwestern Consulting on this project and look forward to discussing the results presented. In the meantime, if you have any questions regarding this report or any other matter pertaining to the project, please call us.

The underground utilities shown have been located from field survey information and existing records. The surveyor makes no guarantees that the underground utilities shown comprise all such utilities in the area, either in-service or abandoned. The surveyor further does not warrant that the underground utilities shown are in the exact location indicated. Although the surveyor does certify that they are located as accurately as possible from the information available.

Infiltration Trench 1

Rev 11/5/2021

W1 - Determining Post-Development Cover Types, Areas, Curve Numbers, and Runoff Coefficients

Rational Method Variables

Cover Type	Soil Type	Area (sft)	Area (ac)	Runoff Coeff. (C)	(C) x (Area)
Building/Driveways		21,265	0.49	0.95	0.46
Pavement/Sidwalk/paths		41,028	0.94	0.95	0.89
Grass	B (4-8% slopes)	26,326	0.60	0.30	0.18
Grass	B (>8% slopes)	26,326	0.60	0.35	0.21
Water Surface		0	0.00	1.00	0.00
Total		114,945	2.64		1.75
			Weighted C = (Sum(C)x(Area))/(Area Total)=		0.66

NRCS Variables (Pervious)

Cover Type	Soil Type	Area (sft)	Area (ac)	Curve Number	(CN) x (Area)
Grass	B	52,652	0.60	61	0.37
Total		52,652	0.60		0.37
			Weighted CN = (Sum(CN)x(Area))/(Area Total)=		61

NCRS Variables (Impervious)

Cover Type	Soil Type	Area (sft)	Area (ac)	Curve Number	(CN) x (Area)
Building/Driveways		21,265	0.49	98	0.48
Pavement/Sidwalk/paths		41,028	0.94	98	0.92
Water Surface		0	0.00	98	0.00
Total		62,293	1.43		1.40
			Weighted CN = (Sum(CN)x(Area))/(Area Total)=		98

W2 - W2 - First Flush Runoff Calculations (Vff)

A. Vff = 1" x 1'/12" x 43560 sft/ac x A x C — where A= 2.64 — and where C= 0.66

Vff = 1" x 1'/12" x 43560 sft/ac x 2.64 x 0.66 = 6,322 cf

W3 - W3 - Pre-Development Bankfull Runoff Calculations (Vbf-pre)

A. 2 year / 24 hour storm event: P= 2.35 in
B. Pre-Development CN (Meadow, 25% Type A, 75% Type B, 0% Type C, 0% Type D, Soils) CN= 58
C. S = (1000 / CN) - 10 S= 7.241 in
D. Q = [(P-0.2S)^2] / [P+0.8S] Q= 0.100 in
E. Total Site Area excluding "Self-Crediting" BMPs 114,945 sft
F. $V_{bf\text{-}pre}$ = Q x (1/12) x Area $V_{bf\text{-}pre}$ = 956 cft

W4 - Pervious Cover Post-Development Bankfull Runoff Calculations (Vbf-per-post)

A. 2 year / 24 hour storm event: P= 2.35 in
B. Pervious Cover CN From Worksheet 1 CN= 61
C. S = (1000 / CN) - 10 S= 6.393 in
D. Q = [(P-0.2S)^2] / [P+0.8S] Q= 0.154 in
E. Pervious Cover Area from Worksheet 1 52,652 sft
F. $V_{bf\text{-}per\text{-}post}$ = Q x (1/12) x Area $V_{bf\text{-}per\text{-}post}$ = 675 cft

W5 - W5 - Impervious Cover Post-Development Bankfull Runoff Calculations (Vbf-imp-post)

A. 2 year / 24 hour storm event: P= 2.35 in
B. Impervious Cover CN From Worksheet 1 CN= 98
C. S = (1000 / CN) - 10 S= 0.204 in
D. Q = [(P-0.2S)^2] / [P+0.8S] Q= 2.122 in
E. Impervious Cover Area from Worksheet 1 62,293 sft
F. $V_{bf\text{-}imp\text{-}post}$ = Q x (1/12) x Area $V_{bf\text{-}imp\text{-}post}$ = 11,014 cft

W6 - W6 - Pervious Cover Post-Development 100-Year Runoff Calculations (V100-per-post)

A. 100 year / 24 hour storm event: P= 5.11 in
B. Pervious Cover CN From Worksheet 1 CN= 61
C. S = (1000 / CN) - 10 S= 6.393 in
D. Q = [(P-0.2S)^2] / [P+0.8S] Q= 1.436 in
E. Pervious Cover Area from Worksheet 1 52,652 sft
F. $V_{100\text{-}per\text{-}post}$ = Q x (1/12) x Area $V_{100\text{-}per\text{-}post}$ = 6,299 cft

W7 - W7 - Impervious Cover Post-Development 100-Year Runoff Calculations (V100-imp-post)

A. 100 year / 24 hour storm event: P= 5.11 in
B. Impervious Cover CN From Worksheet 1 CN= 98
C. S = (1000 / CN) - 10 S= 0.204 in
D. Q = [(P-0.2S)^2] / [P+0.8S] Q= 4.873 in
E. Impervious Cover Area from Worksheet 1 62,293 sft
F. $V_{bf\text{-}imp\text{-}post}$ = Q x (1/12) x Area $V_{100\text{-}imp\text{-}post}$ = 25,296 cft

W8 - Time of Concentration (Tc-hrs)

A. Assume 15-minute minimum time of concentration Tc= 0.25 hr

W9 - Runoff Summary & On-Site Infiltration Requirement

A. Summary from Previous Worksheets
First Flush Volume (Vff) **6,322 cft**
Pre-Development Bankfull Runoff Volume (Vbf-pre) **956 cft**
Pervious Cover Post-Development Bankfull Volume (Vbf-per-post) *675 cft*
Impervious Cover Post-Development Bankfull Volume (Vbf-imp-post) *11,014 cft*
Total BF Volume (Vbf-post) **11,688 cft**
Pervious Cover Post-Development 100-Year Volume (V100-per-post) *6,299 cft*
Impervious Cover Post-Development 100-Year Volume (V100-imp-post) *25,296 cft*
Total 100-Year Volume (V100) **31,595 cft**
B. Determine Onsite Infiltration Requirement
Subtract the Pre-Development Bankfull from the Post-Development Bankfull Volume
Total Post-Development Bankfull Volume (Vbf-post) 11,688 cft
Pre-Development Bankfull Runoff Volume (Vbf-pre) 956 cft
Bankfull Volume Difference **10,732 cft**
Infiltration Requirement (Vinf) **10,732 cft**

W10 - Detention/Retention Requirement

A. Q_p = 238.6 Tc^0.82 743.63 cfs/(in x sq. mi)
B. Total Site Area excluding "Self-Crediting" BMPs 2.64 ac
C. Q_{100} = $Q_{100\text{-}per}$ + $Q_{100\text{-}imp}$ 6.309 in
(from W6 and W7, respectively)
D. Peak Flow (PF) = Q_p x Q_{100} x Area / 640 19.34 cfs
E. Delta = PF - 0.15 x Area (ac) 18.95 cfs
[0.15 x Area (ac)] *0.40 cfs*
F. V_{det} = Delta / PF x V_{100} 30,949 cft
Required Detention not including infiltration credit or penalty.
Sediment Forebay Volume Required (5% of V100) 1,580 cft

W11 - Determine Applicable BMPs and Associated Volume Credits

		Storage Volume (cft)			Infilt. Volume in 6-hr	Total Volume
Proposed BMP	Area (sft)	In Pipes	In Soil	Design Infilt. Rate (in/hr)	Drawdown (cft)	Reduction (cft)
Infiltration Trenches	7,035	1,233	4,379	7.25	25,502	31,114
				Total Volume Reduction Credit by Proposed Structural BMPs (cft)		30,949
				Runoff Volume Infiltration Requirement (Vinf) from W9 (cft)		10,732
				Runoff Volume Credit (cft)		20,217

W13 - Site Summary of Infiltration & Detention

A. Stormwater Management Summary
Min Infiltration Requirement (Vinf) 10,732 cft
Designed/Provided Infiltration Volume 30,949 cft
% Minimum Required Infiltration Provided 288 %
Total Calculated Detention Volume, Vdet 30,949 cft
Net Required Detention Volume 0 cft
(Vdet - Designed/Provided Infiltration Volume)

Detention Outlet Calculations

C. Full Infiltration Design

Total Storage Volume 30,949 cft
Infiltration Area 7035 sft
Infiltration Rate, Average 7.25 in/hr
Infiltration Flow Rate 4250.31 cft/hr
Time to Fully Drain **7.3 hr**

This is less than 48 hours max, so the trench complies with the drawdown requirement.

MIDWESTERN CONSULTING
3815 Plaza Drive, Ann Arbor, Michigan 48108
(734) 995-0200 • www.midwesternconsulting.com
Land Development • Land Survey • Institutional • Municipal
Wireless Communications • Transportation • Landfill Services

CLIENT
NORFOLK DEVELOPMENT CORPORATION
8178 JACKSON RD., SUITE D
ANN ARBOR, MI 48108
JIM HAEUSSLER
(734) 260-9678

3991 DEXTER-ANN ARBOR RD

PRELIMINARY PLANNED UNIT DEVELOPMENT
STORMWATER CALCULATIONS 1 OF 2

08

JOB No. 17310
DATE: 8/27/21
SHEET 08 OF 20
CADD: RML
ENG: RWL2
PM: TJC
TECH:
/17310DR1

REVISIONS:
REV. DATE
PER MUNICIPAL REVIEW 11/05/21

Infiltration Trench 2

Rev 11/5/2021

W1 - Determining Post-Development Cover Types, Areas, Curve Numbers, and Runoff Coefficients

Rational Method Variables

Cover Type	Soil Type	Area (sft)	Area (ac)	Runoff Coeff. (C)	(C) x (Area)
Building/Driveways		4,785	0.11	0.95	0.10
Pavement/Sidwalk/paths		14,235	0.33	0.95	0.31
Grass	B (4-8% slopes)	21,048	0.48	0.30	0.14
Water Surface		0	0.00	1.00	0.00
Total		40,068	0.92		0.56
			Weighted C = (Sum(C)x(Area))/(Area Total)=		0.61

NRCS Variables (Pervious)

Cover Type	Soil Type	Area (sft)	Area (ac)	Curve Number	(CN) x (Area)
Grass	B	21,048	0.48	61	0.29
Total		21,048	0.48		0.29
			Weighted CN = (Sum(CN)x(Area))/(Area Total)=		61

NCRS Variables (Impervious)

Cover Type	Soil Type	Area (sft)	Area (ac)	Curve Number	(CN) x (Area)
Building/Driveways		4,785	0.11	98	0.11
Pavement/Sidwalk/paths		14,235	0.33	98	0.32
Water Surface		0	0.00	98	0.00
Total		19,020	0.44		0.43
			Weighted CN = (Sum(CN)x(Area))/(Area Total)=		98

W2 - W2 - First Flush Runoff Calculations (Vrr)

A. Vrr = 1" x 1/12" x 43560 sft/ac x A x C where A= 0.92 and where C= 0.61

Vrr = 1" x 1/12" x 43560 sft/ac x 0.92 x 0.61 = 2,037 cf

W3 - W3 - Pre-Development Bankfull Runoff Calculations (Vbf-pre)

A. 2 year / 24 hour storm event: P= 2.35 in
B. Pre-Development CN (Meadow, 25% Type A, 75% Type B, 0% Type C, 0% Type D, Soils) CN= 58
C. S = (1000 / CN) - 10 S= 7.241 in
D. Q = [(P-0.2S)^2] / [P+0.8S] Q= 0.100 in
E. Total Site Area excluding "Self-Crediting" BMPs 40,068 sft
F. Vbf-pre = Q x (1/12) x Area Vbf-pre = 333 cft

W4 - Pervious Cover Post-Development Bankfull Runoff Calculations (Vbf-per-post)

A. 2 year / 24 hour storm event: P= 2.35 in
B. Pervious Cover CN From Worksheet 1 CN= 61
C. S = (1000 / CN) - 10 S= 6.393 in
D. Q = [(P-0.2S)^2] / [P+0.8S] Q= 0.154 in
E. Pervious Cover Area from Worksheet 1 21,048 sft
F. Vbf-per-post = Q x (1/12) x Area Vbf-per-post = 270 cft

W5 - W5 - Impervious Cover Post-Development Bankfull Runoff Calculations (Vbf-imp-post)

A. 2 year / 24 hour storm event: P= 2.35 in
B. Impervious Cover CN From Worksheet 1 CN= 98
C. S = (1000 / CN) - 10 S= 0.204 in
D. Q = [(P-0.2S)^2] / [P+0.8S] Q= 2.122 in
E. Impervious Cover Area from Worksheet 1 19,020 sft
F. Vbf-imp-post = Q x (1/12) x Area Vbf-imp-post = 3,363 cft

W6 - W6 - Pervious Cover Post-Development 100-Year Runoff Calculations (V100-per-post)

A. 100 year / 24 hour storm event: P= 5.11 in
B. Pervious Cover CN From Worksheet 1 CN= 61
C. S = (1000 / CN) - 10 S= 6.393 in
D. Q = [(P-0.2S)^2] / [P+0.8S] Q= 1.436 in
E. Pervious Cover Area from Worksheet 1 21,048 sft
F. V100-per-post = Q x (1/12) x Area V100-per-post = 2,518 cft

W7 - W7 - Impervious Cover Post-Development 100-Year Runoff Calculations (V100-imp-post)

A. 100 year / 24 hour storm event: P= 5.11 in
B. Impervious Cover CN From Worksheet 1 CN= 98
C. S = (1000 / CN) - 10 S= 0.204 in
D. Q = [(P-0.2S)^2] / [P+0.8S] Q= 4.873 in
E. Impervious Cover Area from Worksheet 1 19,020 sft
F. V100-imp-post = Q x (1/12) x Area V100-imp-post = 7,724 cft

W8 - Time of Concentration (Tc-hrs)

A. Assume 15-minute minimum time of concentration Tc= 0.25 hr

W9 - Runoff Summary & On-Site Infiltration Requirement

A. Summary from Previous Worksheets
First Flush Volume (Vff) 2,037 cft
Pre-Development Bankfull Runoff Volume (Vbf-pre) 333 cft
Pervious Cover Post-Development Bankfull Volume (Vbf-per-post) 270 cft
Impervious Cover Post-Development Bankfull Volume (Vbf-imp-post) 3,363 cft
Total BF Volume (Vbf-post) 3,633 cft
Pervious Cover Post-Development 100-Year Volume (V100-per-post) 2,518 cft
Impervious Cover Post-Development 100-Year Volume (V100-imp-post) 7,724 cft
Total 100-Year Volume (V100) 10,242 cft
B. Determine Onsite Infiltration Requirement
Subtract the Pre-Development Bankfull from the Post-Development Bankfull Volume
Total Post-Development Bankfull Volume (Vbf-post) 3,633 cft
Pre-Development Bankfull Runoff Volume (Vbf-pre) 333 cft
Bankfull Volume Difference 3,299 cft
Infiltration Requirement (Vinf) 3,299 cft

W10 - Detention/Retention Requirement

A. Qp = 238.6 Tc^-0.82 743.63 cfs/(in x sq. mi)
B. Total Site Area excluding "Self-Crediting" BMPs 0.92 ac
C. Q100 = Q100-per + Q100-imp 6.309 in
(from W6 and W7, respectively)
D. Peak Flow (PF) = Qp x Q100 x Area / 640 6.74 cfs
E. Delta = PF - 0.15 x Area (ac) 6.60 cfs
[0.15 x Area (ac)] *0.14 cfs*
F. Vdet = Delta / PF x V100 10,032 cft
Required Detention not including infiltration credit or penalty.
Sediment Forebay Volume Required (5% of V100) 512 cft

W11 - Determine Applicable BMPs and Associated Volume Credits

Proposed BMP	Area (sft)	Storage Volume (cft) In Pipes	Storage Volume (cft) In Soil	Design Infilt. Rate (in/hr)	Infilt. Volume in 6-hr Drawdown (cft)	Total Volume Reduction (cft)
Infiltration Trenches	2,072	363	1,290	8.25	6,547	10,200
				Total Volume Reduction Credit by Proposed Structural BMPs (cft)		10,032
				Runoff Volume Infiltration Requirement (Vinf) from W9 (cft)		3,299
				Runoff Volume Credit (cft)		6,733

W13 - Site Summary of Infiltration & Detention

A. Stormwater Management Summary

Min Infiltration Requirement (Vinf) 3,299 cft
Designed/Provided Infiltration Volume 10,032 cft
% Minimum Required Infiltration Provided 304 %
Total Calculated Detention Volume, Vdet 10,032 cft
Net Required Detention Volume 0 cft
(Vdet - Designed/Provided Infiltration Vdlume)

C. Full Infiltration Design

Total Storage Volume 10,032 cft
Infiltration Area 2072 sft
Infiltration Rate, Average 8.25 in/hr
Infiltration Flow Rate 1424.50 cft/hr
Time to Fully Drain 7.0 hr

This is less than 48 hours max, so the trench complies with the drawdown requirement.

Northwest Detention Basin

REV 11/5/2021

W1 - Determining Post-Development Cover Types, Areas, Curve Numbers, and Runoff Coefficients

Rational Method Variables

Cover Type	Soil Type	Area (sft)	Area (ac)	Runoff Coeff. (C)	(C) x (Area)
Building/Driveways		10,000	0.23	0.95	0.22
Pavement/Sidwalk/paths		0	0.00	0.95	0.00
Grass	B (4-8% slopes)	40,776	0.94	0.33	0.31
Water Surface		9,536	0.22	1.00	0.22
Total		60,312	1.38		0.75
			Weighted C = (Sum(C)x(Area))/(Area Total)=		0.54

NRCS Variables (Pervious)

Cover Type	Soil Type	Area (sft)	Area (ac)	Curve Number	(CN) x (Area)
Grass	A	0	0.00	0	0.00
Grass	B	40,776	0.94	61	0.57
Grass	C	0	0.00	0	0.00
Grass	D	0	0.00	0	0.00
Total		40,776	0.94		0.57
			Weighted CN = (Sum(CN)x(Area))/(Area Total)=		61

NCRS Variables (Impervious)

Cover Type	Soil Type	Area (sft)	Area (ac)	Curve Number	(CN) x (Area)
Building/Driveways		10,000	0.23	98	0.22
Pavement/Sidwalk/paths		0	0.00	98	0.00
Water Surface		9,536	0.22	98	0.21
Total		19,536	0.45		0.44
			Weighted CN = (Sum(CN)x(Area))/(Area Total)=		98

W2 - W2 - First Flush Runoff Calculations (Vrr)

A. Vrr = 1" x 1/12" x 43560 sft/ac x A x C where A= 1.38 and where C= 0.54

Vrr = 1" x 1/12" x 43560 sft/ac x 1.38 x 0.54 = 2,714 cf

W3 - W3 - Pre-Development Bankfull Runoff Calculations (Vbf-pre)

A. 2 year / 24 hour storm event: P= 2.35 in
B. Pre-Development CN (Meadow, 0% Type A, 100% Type B, 0% Type C, 0% Type D, Soils) CN= 58
C. S = (1000 / CN) - 10 S= 7.241 in
D. Q = [(P-0.2S)^2] / [P+0.8S] Q= 0.100 in
E. Total Site Area excluding "Self-Crediting" BMPs 60,312 sft
F. Vbf-pre = Q x (1/12) x Area Vbf-pre = 502 cft

W4 - Pervious Cover Post-Development Bankfull Runoff Calculations (Vbf-per-post)

A. 2 year / 24 hour storm event: P= 2.35 in
B. Pervious Cover CN From Worksheet 1 CN= 61
C. S = (1000 / CN) - 10 S= 6.393 in
D. Q = [(P-0.2S)^2] / [P+0.8S] Q= 0.154 in
E. Pervious Cover Area from Worksheet 1 40,776 sft
F. Vbf-per-post = Q x (1/12) x Area Vbf-per-post = 522 cft

W5 - W5 - Impervious Cover Post-Development Bankfull Runoff Calculations (Vbf-imp-post)

A. 2 year / 24 hour storm event: P= 2.35 in
B. Impervious Cover CN From Worksheet 1 CN= 98
C. S = (1000 / CN) - 10 S= 0.204 in
D. Q = [(P-0.2S)^2] / [P+0.8S] Q= 2.122 in
E. Impervious Cover Area from Worksheet 1 19,536 sft
F. Vbf-imp-post = Q x (1/12) x Area Vbf-imp-post = 3,454 cft

W6 - W6 - Pervious Cover Post-Development 100-Year Runoff Calculations (V100-per-post)

A. 100 year / 24 hour storm event: P= 5.11 in
B. Pervious Cover CN From Worksheet 1 CN= 61
C. S = (1000 / CN) - 10 S= 6.393 in
D. Q = [(P-0.2S)^2] / [P+0.8S] Q= 1.436 in
E. Pervious Cover Area from Worksheet 1 40,776 sft
F. V100-per-post = Q x (1/12) x Area V100-per-post = 4,878 cft

W7 - W7 - Impervious Cover Post-Development 100-Year Runoff Calculations (V100-imp-post)

A. 100 year / 24 hour storm event: P= 5.11 in
B. Impervious Cover CN From Worksheet 1 CN= 98
C. S = (1000 / CN) - 10 S= 0.204 in
D. Q = [(P-0.2S)^2] / [P+0.8S] Q= 4.873 in
E. Impervious Cover Area from Worksheet 1 19,536 sft
F. Vbf-imp-post = Q x (1/12) x Area Vbf-imp-post = 7,933 cft

W8 - Time of Concentration (Tc-hrs)

A. Assume 15-minute minimum time of concentration Tc= 0.25 hr

W9 - Runoff Summary & On-Site Infiltration Requirement

A. Summary from Previous Worksheets
First Flush Volume (Vff) 2,714 cft
Pre-Development Bankfull Runoff Volume (Vbf-pre) 502 cft
Pervious Cover Post-Development Bankfull Volume (Vbf-per-post) 522 cft
Impervious Cover Post-Development Bankfull Volume (Vbf-imp-post) 3,454 cft
Total BF Volume (Vbf-post) 3,977 cft
Pervious Cover Post-Development 100-Year Volume (V100-per-post) 4,878 cft
Impervious Cover Post-Development 100-Year Volume (V100-imp-post) 7,933 cft
Total 100-Year Volume (V100) 12,812 cft
B. Determine Onsite Infiltration Requirement
Subtract the Pre-Development Bankfull from the Post-Development Bankfull Volume
Total Post-Development Bankfull Volume (Vbf-post) 3,977 cft
Pre-Development Bankfull Runoff Volume (Vbf-pre) 502 cft
Bankfull Volume Difference 3,475 cft
Infiltration Requirement (Vinf) 3,475 cft

W10 - Detention/Retention Requirement

A. Qp = 238.6 Tc^-0.82 743.63 cfs/(in x sq. mi)
B. Total Site Area excluding "Self-Crediting" BMPs 1.38 ac
C. Q100 = Q100-per + Q100-imp 6.309 in
(from W6 and W7, respectively)
D. Peak Flow (PF) = Qp x Q100 x Area / 640 10.15 cfs
E. Delta = PF - 0.15 x Area (ac) 9.94 cfs
[0.15 x Area (ac)] *0.21 cfs*
F. Vdet = Delta / PF x V100 12,549 cft
Required Detention not including infiltration credit or penalty.
Sediment Forebay Volume Required (5% of V100) 641 cft

W11 - Determine Applicable BMPs and Associated Volume Credits

Proposed BMP	Area (sft)	Storage Volume (cft) Surface	Storage Volume (cft) In Soil	Design Infilt. Rate (in/hr)	Infilt. Volume in 6-hr Drawdown (cft)	Total Volume Reduction (cft)
Infiltration Basin	0			0.00	0	0
				Total Volume Reduction Credit by Proposed Structural BMPs (cft)		0
				Runoff Volume Infiltration Requirement (Vinf) from W9 (cft)		3,475
				Runoff Volume Credit (cft)		0

W13 - Site Summary of Infiltration & Detention

A. Stormwater Management Summary

Min Infiltration Requirement (Vinf) 3,475 cft
Designed/Provided Infiltration Volume 0 cft
% Minimum Required Infiltration Provided 0 %
Total Calculated Detention Volume, Vdet 12,549 cft
Net Required Detention Volume 12,549 cft
(Vdet - Designed/Provided Infiltration Volume)

B. Detention Volume Increase for sites where the required infiltration volume cannot be achieved.

% Required Infiltration NOT Provided 100.0 %
(100% - % Minimum Required Infiltration Provided)
Net % Penalty (20% x % Required Infiltration NOT Provided) 20.0 %
Total Required Detention Volume, including penalty 15,059 cft
[(100% + Net % Penalty) x Net Required Detention Volume)]

Detention Outlet Calculcations

A. Required Detention Volumes (Reduced by 6-hour infiltration)

Storm Event	Req'd Volume	less	Infil. Credit	=	Final Volume
First Flush	2,714 cft	-	0 cft	=	**2,714** cft
Bankfull	3,977 cft	-	0 cft	=	**3,977** cft
100 -year	12,549 cft	-	0 cft	=	**12,549** cft
100-year + Req'd Penalty	15,059 cft	-	0 cft	=	**15,059** cft
Forebay Volume Required (5% of 100-yr)				=	**641** cft

B. Detention Volumes Provided

Elevation	Area (sft)	Depth (ft)	Volume (cft)	Cum. Volume (cft)
905.0	2,819	0.0	0	0
906.0	4,760	1.0	3,747	3,747
907.0	6,858	1.0	5,777	9,525
908.0	9,112	1.0	7,958	17,483
908.5	10,299	0.5	4,850	22,333
909.0	11,524	0.5	5,453	27,786
909.5	12,789	0.5	6,076	33,861
			Total Volume =	33,861

Storage Elevation Calculation

First Flush Elevation (Xff)= (906.0 - 905.0) / (Xrr - 905.0) = Xff = 905.72 ft
(3,747 - 0) / (2,714 - 0)

Bankfull Elevation (Xbf)= (907.0 - 906.0) / (Xbf - 906.0) = Xbf = 906.04 ft
(9,525 - 3,747) / (3,977 - 3,747)

100-Year Elevation (X100)= (908.0 - 907.0) / (X100 - 907.0) = X100 = 907.38 ft
(17,483 - 9,525) / (12,549 - 9,525)

Freeboard (X100)+1 1' Freeboard = 908.38 ft

C. Two-Stage Outlet Design

First Flush Discharge (24-36 hours for the detention of first flush storm event)

Average Head (Have) = 2/3 (Xrr - Xbot) = 2/3 (905.72 - 905) = 0.48 ft
First Flush Max. Flowrate (Qrr-max) = Vrr / 24 hrs = 2714cfs / (24 hrs *3600) = 0.03 cfs
Req Area (Arr) = Qrr-max / 0.62 / sqrt(2*g*Have) = 0.03/0.62/(2*32.2*0.48)^0.5= 0.009 sft
Orifice Diameter, Proposed = 0.750 in
Orifice Area = 0.0031 sft
Number Required for 24 hr drainage = Arr / Orifice Area= 0.009 sft / 0.0031 sft = 2.84 holes
Number of Holes to Use 2 holes
Area of (2) - 0.75 inch Orific Arr 0.0061 sft
Actual Flow (Qrr) = 0.62 * Arr * sqrt(2*g*Have) = 0.62 * 0.0061 *sqrt(2*32.2*0.48) = 0.021 cfs
Actual Time (Trr) = Vrr / Qrr = 2714 cf / 0.021 cfs / 3600 = 35.85 hr

Bankfull Discharge (36-48 hours)

Average Head (Have) = 2/3 (Xbf - Xbot) = 2/3 (906.04 - 905) = 0.69 ft
Actual Flow (Qbf) = 0.62 * Aff * sqrt(2*g*Have) = 0.62 * 0.0061 * sqrt(2 * 32.2 * 0.69)= 0.025 cfs
Actual Time (Tbf) = Vbf / Qbf = 3977 cf / 0.025 cfs / 3600 = 43.82 hr
Drawdown Time for Bankfull Volume is between 36 and 48 hours
Therefore use (2) 0.75 inch Diameter Holes at Elev 905

100-year Discharge (0.15 cfs/acre max. allowed)

Max Head to Lowest Holes (Hmax-100) = X100 - Xot= 907.38 - 905 = 2.38 ft
Max Flow at Lowest Holes (Qmax-ff)= 0.62 * Aff * sqrt(2 * g * Hmax) = = 0.62 * 0.0061 * sqrt(2 * 32.2 * 2.38) = 0.047 cfs
Max Head to 100yr Holes (Hmax-100) = X100 - Xbf = 907.38 - 906.04 = 1.34 ft
Qa (Allowable 100-year release rate)= 0.15 cfs * 1.38 ac = 0.208 cfs
Max flow through 100-year holes = Qmax-100 = Qa - Qmax-ff = 0.21 cfs - 0.05 cfs = 0.16 cfs
Max. Area for Orifices (A100) = Qmax / 0.62 / sqrt (2*g*h-100max) = 0.03 sft
Orifice Diameter 1.250 in
Orifice Area 0.009 sft
Number Required for 0.15 cfs/acre drainage 3.28
Number of holes used 3 ea
Area of (3) - 1.25 inch Orific (A100) 0.026 sft
100-year orifices - Actual Flow (Qmax-100) = 0.62 * A100 * sqrt (2 * g * Hmax100) = 0.62 * 0.026 * sqrt (2 * 32.2 * 1.34) = 0.150 cfs
Actual Max Release Rate (Qmax) = Qmax-100 + Qmax-ff = 0.15 cfs + 0.047 cfs = 0.197 cfs

100-year Drawdown Time (72-hour max. to the lowest orifice)

Average head to first flush holes with all orifice in use (Hht-ave) = 2/3 (X100 - Xbf) + (Xbf - Xbot)
Hht-ave = 2/3 (907.38 - 906.04) + (906.04 -905) = 1.93 ft
Average flow through lowest holes to bankfull elevation = 0.62 * Aff * sqrt (2 * g * Hht-ave)
Qff-ave = 0.62 * 0.0061 * SQRT(2 * 32.2 * 1.93) = 0.042 cfs
Average head to 100-year holes with all orifices in use = 2/3 (X100-Xbf)
H100-ave = 2/3 * (907.38 - 906.04) = 0.89 ft
Average flow through 100-yr holes with all holes in use = 0.62 * A100 * sqrt (2 * g * H100-ave)
Q100-ave = 0.62 * 0.026 * sqrt(2 * 32.2 * 0.89) = 0.122 cfs
Combined drawdown flow (Q100-bf) = Qff-ave + Q100-ave = 0.042 cfs + 0.122 cfs = 0.164 cfs
Volume of Storage above Bankfull Elev (Vzero) = V100 - Vbf = 15059 - 3977 = 11,082 cft
Time to drain Volume between 100yr and bankfull elevations = Vzero/Q100-br/3600 = 11082 cf / 0.164 cfs / 3600 = 18.75 hr
Total 100-year drawdown time = T100 = T100-bf + Tbf = 43.82 hrs + 18.75 hrs = 62.57 hr
Therefore use (3) 1.25 inch Diameter Holes at Elev 906.04

MIDWESTERN CONSULTING
3815 Plaza Drive, Ann Arbor, Michigan 48108
(734) 995-0200 • www.midwesternconsulting.com
Land Development • Land Survey • Institutional • Municipal
Wireless Communications • Transportation • Landfill Services

CLIENT
NORFOLK DEVELOPMENT CORPORATION
8178 JACKSON RD., SUITE D
ANN ARBOR, MI 48108
JIM HAEUSSLER
(734) 260-9678

3991 DEXTER-ANN ARBOR RD

PRELIMINARY PLANNED UNIT DEVELOPMENT
08 STORMWATER CALCULATIONS 2 OF 2

09

DATE: 8/27/21
SHEET 09 OF 20
CADD:
ENG: RMJ
PM: DJC
TECH:
J:\17310\08R1

JOB No. 17310
REVISIONS: REV. DATE

M:\Civil3d_Proj\17310\Prelim PUD\17310R1.dwg, 11/8/2021 10:07 AM, Quinn C. Foster, 08 STORMWATER CALCULATIONS 2 OF 2, MCLLC PDF.pc3
Copyright © 2021 Midwestern Consulting, L.L.C. All rights reserved. No part of this drawing may be used or reproduced in any form or by any means, or stored in a database or retrieval system, without prior permission of Midwestern Consulting, L.L.C.

The underground utilities shown have been located from field survey information and existing records. The surveyor makes no guarantees that the underground utilities shown comprise all such utilities in the area, either in-service or abandoned. The surveyor further does not warrant that the underground utilities shown are in the exact location indicated. Although the surveyor does certify that they are located as accurately as possible from the information available.

M:\Civil3dLPro\17310\Prelim PUD\17310FP1.dwg, 11/8/2021 10:07 AM, Quinn C. Foster, FIRE PROTECTION AND SOLID WASTE PLAN, MCLLC PDF.pc3
Copyright © 2021 Midwestern Consulting L.L.C. All rights reserved. No part of this drawing may be used or reproduced in any form or by any means, or stored in a database or retrieval system, without prior permission of Midwestern Consulting L.L.C.

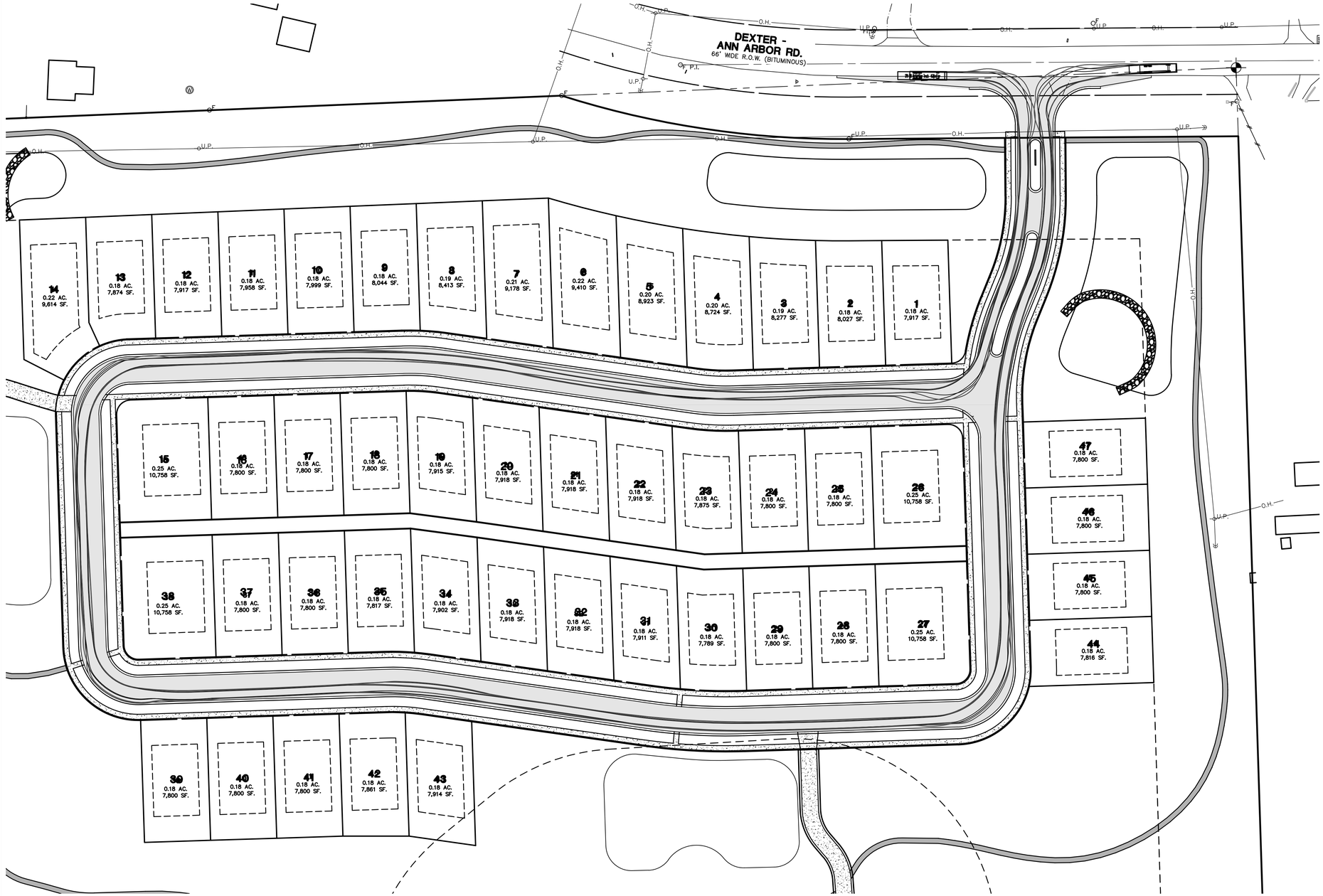

SCALE: 1" = 50'

0 50 100 150

LEGEND

- PROP. CURB & GUTTER
- PROP. BITUMINOUS PAVEMENT
- PROP. CONCRETE PAVEMENT
- PROP. PEDESTRIAN PATH
- SIDEWALK RAMP
- EXIST. WELL
- PROP. WELL
- SINGLE TREE
- TREE OR BRUSH LIMIT
- PROP. LOT BUILDING SETBACKS/ 100FT PERIMETER SETBACK
- TREE PRESERVATION LIMIT
- PROP. SANITARY SEWER
- PROP. STORM SEWER
- PROP. CATCH BASIN OR INLET
- END SECTION
- CULVERT
- PROP. LIGHTPOLE

FIRE PROTECTION NOTES

1. ALL FIRE LANES ARE 28' WIDE MINIMUM WIDTH: DIMENSIONS ON THIS SHEET ARE FACE-OF-CURB TO FACE-OF-CURB.
2. ALL RADIUS DIMENSIONS SHOWN ON THIS SHEET ARE TO BACK OF CURB.
3. CONSTRUCTION SEQUENCE
   A. STORAGE AREAS FOR CONSTRUCTION MATERIAL MUST BE SO AS NOT TO INTERFERE WITH EMERGENCY SITE ACCESS.
7. DURING DETAILED ENGINEERING, THE SITE ADDRESS LOCATION(S) WILL BE COORDINATED WITH THE FIRE DEPARTMENT TO ENSURE THEY ARE CLEARLY LABELED AND VISIBLE WHEN APPROACHING THE BUILDING UNITS.

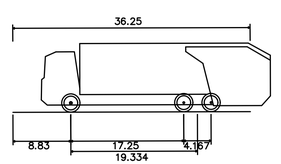

Garbage Truck – Xpeditor	
Overall Length	36.250ft
Overall Width	8.420ft
Overall Body Height	10.481ft
Min Body Ground Clearance	0.934ft
Track Width	8.000ft
Lock-to-lock time	6.00s
Max Steering Angle (Virtual)	31.80°

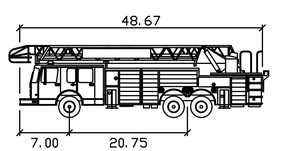

AA FIRE TRUCK	FEET
Width	:10.00
Track	:8.00
Lock to Lock Time	:6.00s
Steering Angle	:29.10

The underground utilities shown have been located from field survey information and existing records. The surveyor makes no guarantees that the underground utilities shown comprise all such utilities in the area, either in-service or abandoned. The surveyor further does not warrant that the underground utilities shown are in the exact location indicated. Although the surveyor does certify that they are located as accurately as possible from the information available.

811 Know what's below. Call before you dig.

MIDWESTERN CONSULTING
3815 Plaza Drive, Ann Arbor, Michigan 48108
(734) 995-0200 • www.midwesternconsulting.com
Land Development • Land Survey • Institutional • Municipal
Wireless Communications • Transportation • Landfill Services

CLIENT
NORFOLK DEVELOPMENT CORPORATION
8178 JACKSON RD., SUITE D
ANN ARBOR, MI 48108
JIM HAEUSSLER
(734) 260-9678

3991 DEXTER-ANN ARBOR RD

PRELIMINARY PLANNED UNIT DEVELOPMENT
FIRE PROTECTION AND SOLID WASTE PLAN

10

JOB No. 17310
REVISIONS:
PRE-MUNICIPAL REVIEW 11/05/21

DATE:
SHEET OF 20
CADD:
ENG: RMJ.2
PM: TJC
TECH:
J:\17310FP1

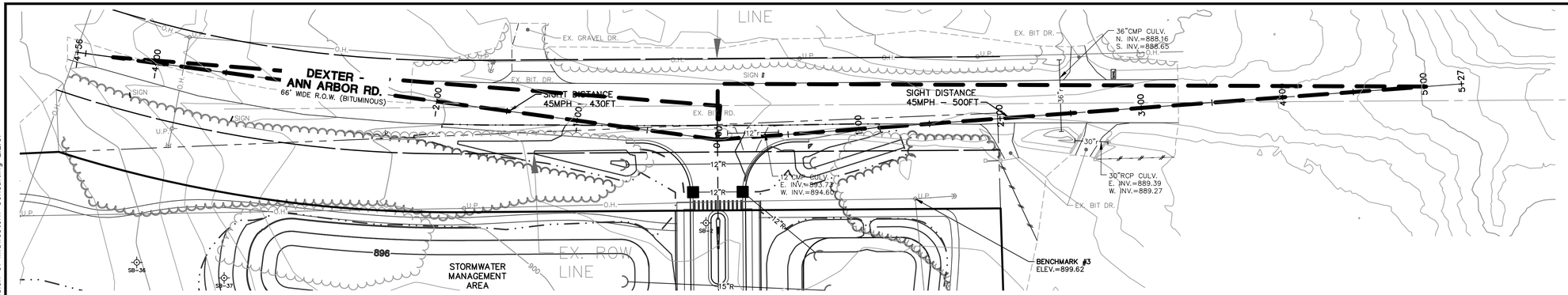

ENTRANCE 3991 DEXTER-ANN ARBOR ROAD SIGHT DISTANCE

SCALE : 1" = 40'

SCALE: 1" = 40'

0 40 80 120

LEGEND

- EXIST. CONTOUR
- PROP. CONTOUR
- EXIST. UTILITY POLE
- GUY WIRE
- ELEC. TRANSFORMER
- EXIST. OVERHEAD UTILITY LINE
- EXIST. LIGHT POLE
- EXIST. TELEPHONE LINE
- EXIST. ELECTRIC LINE
- EXIST. GAS LINE
- EXIST. SANITARY SEWER
- PROP. SANITARY SEWER
- TELEPHONE RISER
- ELECTRIC METER
- WATER METER
- GAS METER
- GAS LINE MARKER
- EXIST. STORM SEWER
- PROP. STORM SEWER
- EXIST. CATCH BASIN OR INLET
- PROP. CATCH BASIN OR INLET
- END SECTION
- CULVERT
- SIGN
- MAILBOX
- FENCE
- GUARDRAIL
- POST
- SINGLE TREE
- TREE OR BRUSH LIMIT

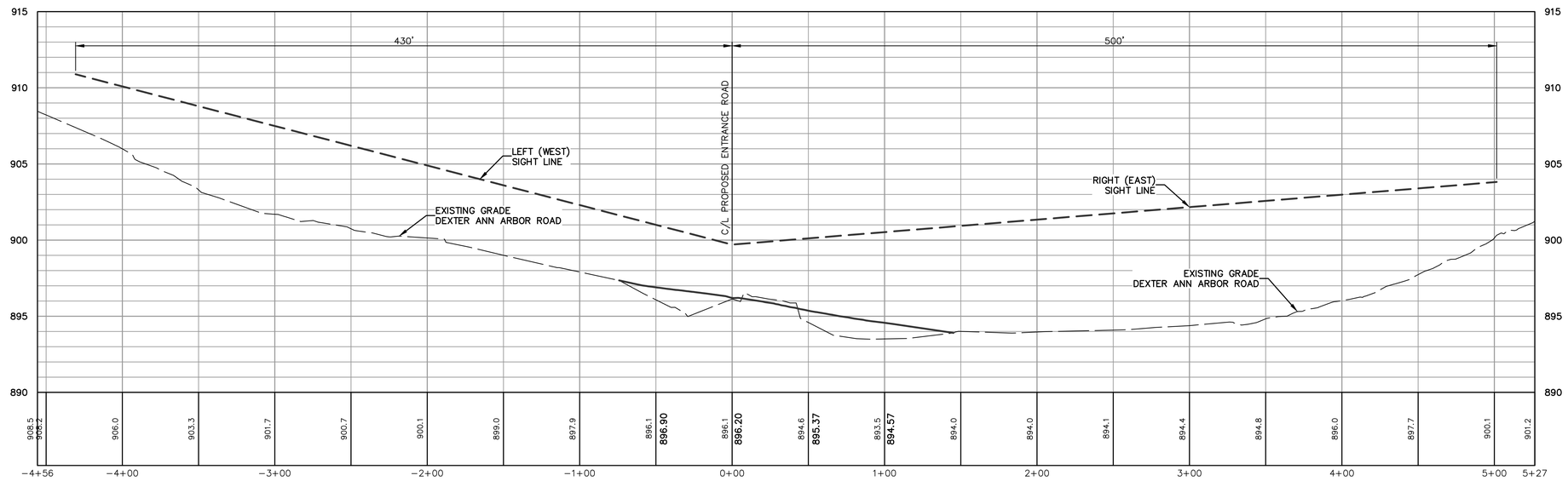

SIGHT DISTANCE PROFILE VIEW

SCALE : 1" = 40'



LEFT (WEST) VIEW



RIGHT (EAST) VIEW

The underground utilities shown have been located from field survey information and existing records. The surveyor makes no guarantees that the underground utilities shown comprise all such utilities in the area, either in-service or abandoned. The surveyor further does not warrant that the underground utilities shown are in the exact location indicated. Although the surveyor does certify that they are located as accurately as possible from the information available.

M:\Civil3d_Pro\17310\Prelim Pkg\17310SDPF.dwg, 11/8/2021 10:08 AM, Quinn C. Foster, ENTRANCE SIGHT DISTANCE PLAN AND PROFILE_MCLLC.PDF.pc3

Copyright © 2021 Midwestern Consulting, L.L.C. All rights reserved. No part of this drawing may be used or reproduced in any form or by any means, or stored in a database or retrieval system, without prior permission of Midwestern Consulting, L.L.C.

Know what's below. Call before you dig. 811

MIDWESTERN CONSULTING
3815 Plaza Drive, Ann Arbor, Michigan 48108
(734) 995-0200 • www.midwesternconsulting.com
Land Development • Land Survey • Institutional • Municipal
Wireless Communications • Transportation • Landfill Services

CLIENT
NORFOLK DEVELOPMENT CORPORATION
8178 JACKSON RD., SUITE D
ANN ARBOR, MI 48108
JIM HAEUSSLER
(734) 260-9678

3991 DEXTER-ANN ARBOR RD

PRELIMINARY PLANNED UNIT DEVELOPMENT
ENTRANCE SIGHT DISTANCE PLAN AND PROFILE

11

JOB No. 17310

REVISIONS:
PER MUNICIPAL REVIEW 11/05/21

DATE: 8/27/21
SHEET 11 OF 20
CADD:
ENG: RWL2
PM: TJC
TECH:
/17310SDPF

Outdoor Lighting
Acorn Series



Acorn Series post-top luminaires are offered in LED and HPS technology, and in assorted configurations:

- Glass globe only
- Glass globe with ribs and band
- Glass globe with full cover, ribs and band

These luminaires are designed for roadways, walkways and parking lots in residential, municipal, and commercial developments.

Lighting Applications

- Residential and urban boulevards
- City streets
- Parking lots
- Campuses
- Commercial developments
- Plazas
- Historic districts
- Village squares
- Parks
- Walkways and roadways

Product Information

Luminaire Housing Color	Wattage	Light Source	Correlated Color Temperature (CCT)[1]	Initial Delivered Lumens[2]	Pole Height Options
Black	39	LED	4,000	5,246	11.5' to 14.5'
Black	60	LED	4,000	7,438	11.5' to 14.5'
Black	100	HPS	2,100	9,277	11.5' to 14.5'

Questions?

Our lighting professionals are available to answer your questions, and to provide a FREE, no-obligation estimate.

Visit **dteenergy.com/lighting** to get started today.

1. The correlated color temperature of a light source is measured on the Kelvin (K) scale. Color temperatures of light sources may range in appearance between warm white (3,000K – 3,100K), cool white (3,500K – 4,500K) and daylight (4,800K – 6,500K).
2. Measurements taken from luminaire with clear glass globe option only (no other accessories or attachments used during testing).

DTE

Acorn Series

Lighting Distribution

Initial delivered luminance levels are shown at ground level and are measured in footcandles (fc). A footcandle is a unit of measure for luminance equal to a uniformly distributed flux of one lumen incident upon one square foot of surface area. Initial delivered footcandle distribution may depreciate over time.

39W LED Acorn

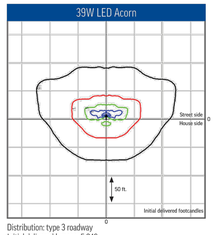

Distribution: type 3 roadway
Initial delivered lumens: 5,246
Luminaire mounting height: 13.5 feet

60W LED Acorn

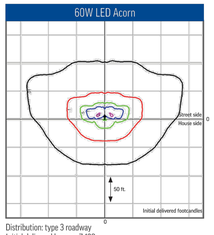

Distribution: type 3 roadway
Initial delivered lumens: 7,438
Luminaire mounting height: 13.5 feet

100W HPS Acorn

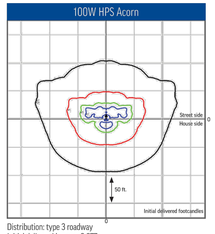

Distribution: type 3 roadway
Initial delivered lumens: 9,277
Luminaire mounting height: 13.5 feet

Legend for Luminaire Lighting Distribution

fc	Contour Color
2	
1	
0.5	
0.2	
0.01	

Typical Lighting Levels for Natural Outdoor Conditions

Lighting Condition	fc
Sunlight	10,000
Full Daylight	1,000
Overcast Day	100
Very Dark Day	10
Twilight	1
Deep Twilight	0.5
Full Moon	0.01
Quarter Moon	0.001
Starlight	0.0001
Overcast Night	0.00001

DTE

194039/7/111-19

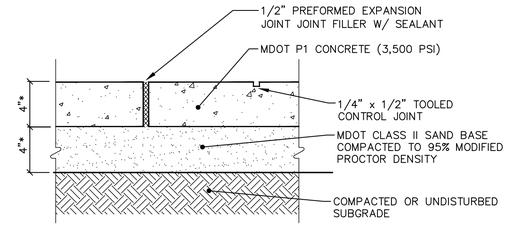

NOTE:
* INCREASE CONCRETE WALK TO 6" WHEN CROSSING A SINGLE–FAMILY OR DOUBLE–FAMILY DRIVEWAY, AND TO 8" FOR COMMERCIAL DRIVE CROSSINGS. USE 6" CLASS II SAND BASE AT RESIDENTIAL DRIVE CROSSINGS, AND 8" 21AA AGGREGATE BASE (98% MODIFIED PROCTOR) AT COMMERCIAL DRIVE CROSSINGS.

CONCRETE WALK DETAIL
NOT TO SCALE

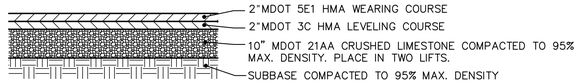

BITUMINOUS PAVEMENT DETAIL
SCALE : NTS

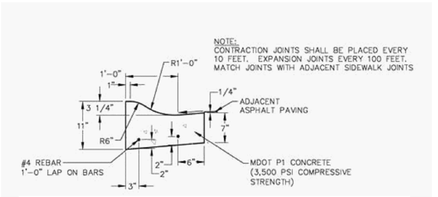

18" WIDE MOUNTABLE CURB \ GUTTER
SCALE : NTS

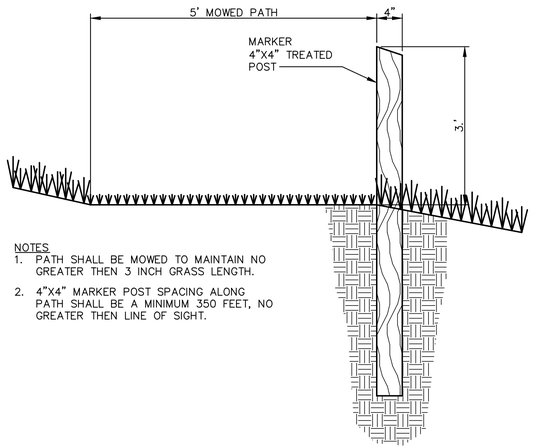

NOTES
1. PATH SHALL BE MOWED TO MAINTAIN NO GREATER THEN 3 INCH GRASS LENGTH.
2. 4"X4" MARKER POST SPACING ALONG PATH SHALL BE A MINIMUM 350 FEET, NO GREATER THEN LINE OF SIGHT.

MOWED PATH DETAIL
SCALE : NTS

The underground utilities shown have been located from field survey information and existing records. The surveyor makes no guarantees that the underground utilities shown comprise all such utilities in the area, either in-service or abandoned. The surveyor further does not warrant that the underground utilities shown are in the exact location indicated. Although the surveyor does certify that they are located as accurately as possible from the information available.

M:\Civil3d_Pro\17310\Prelim PUD\17310DT1.dwg, 11/8/2021 10:08 AM, Quinn C. Foster, SITE DETAILS, MCLLC PDF.pc3
Copyright © 2021 Midwestern Consulting L.L.C. All rights reserved. No part of this drawing may be used or reproduced in any form or by any means, or stored in a database or retrieval system, without prior permission of Midwestern Consulting L.L.C.

MIDWESTERN CONSULTING
3815 Plaza Drive, Ann Arbor, Michigan 48108
(734) 995-0200 • www.midwesternconsulting.com
Land Development • Land Survey • Institutional • Municipal
Wireless Communications • Transportation • Landfill Services

CLIENT
NORFOLK DEVELOPMENT CORPORATION
8178 JACKSON RD., SUITE D
ANN ARBOR, MI 48108
JIM HAEUSSLER
(734) 260-9678

3991 DEXTER-ANN ARBOR RD
PRELIMINARY PLANNED UNIT DEVELOPMENT
SITE DETAILS

12

DATE:
SHEET OF 20
CADD:
ENG: RWL2
PM: TJC
TECH:
/17310DT1

JOB No. **17310**

REVISIONS:	REV. DATE
PER MUNICIPAL REVIEW	11/05/21

M:\Civil\3d_Pro\17310\Prelim PUD\17310T1.dwg, 11/8/2021 10:08 AM, Quinn C. Foster, STORMWATER DETAILS, MCLLC PDF.pc3
Copyright © 2021 Midwestern Consulting L.L.C. All rights reserved. No part of this drawing may be used or reproduced in any form or by any means, or stored in a database or retrieval system, without prior permission of Midwestern Consulting L.L.C.

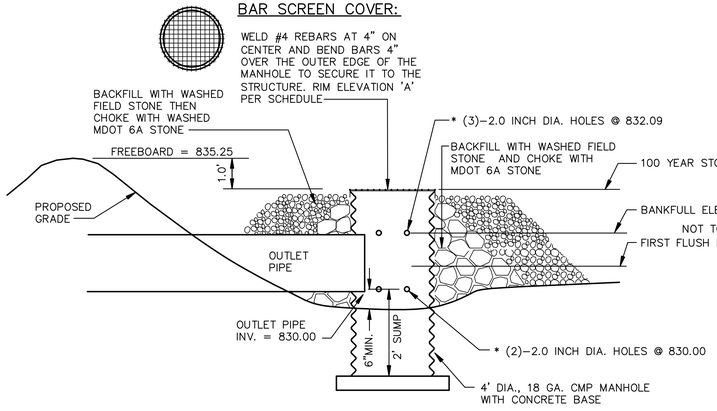

* CONTRACTOR TO INSTALL WIRE MESH OVER ALL ORIFICE OPENINGS GREATER THAN 1.25" IN DIAMETER

DETENTION OUTLET DETAIL

NO SCALE

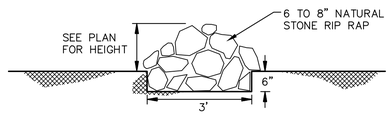

SEDIMENT FOREBAY RIP-RAP BARRIER DETAIL

SCALE : NTS

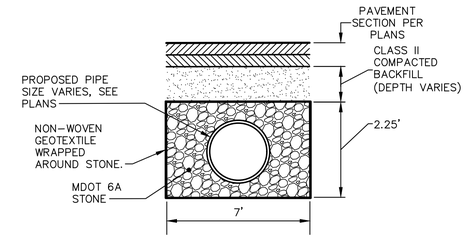

INFILTRATION TRENCH DETAIL

SCALE : NTS

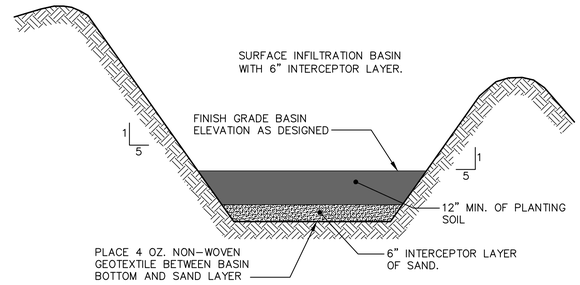

NOTES:

1. THE SAND LAYER AND GEOTEXTILE SHALL NOT BE PLACED IN THE BOTTOM OF THE INFILTRATION BASIN UNTIL ONSITE SOIL STABILIZATION IS IMMINENT TO PREVENT THE SILTING OF THE SAND LAYER DURING THE CONSTRUCTION PERIOD.
2. THE BOTTOM OF THE POND SHALL BE EXCAVATED TO A POINT 6 INCHES HIGHER THAN THE SUB BASE GRADE AND SHALL REMAIN AT THAT ELEVATION UNTIL ONSITE SOIL STABILIZATION IS IMMINENT AND THE SAND LAYER IS PLANNED TO BE INSTALLED. AT THAT TIME THE FINAL 6 INCHES OF MATERIAL SHALL BE REMOVED, ALONG WITH ANY SILTS THAT HAVE ACCUMULATED, LEAVING A CLEAN, SANDY BOTTOM. THE ENGINEER SHALL BE CONTACTED FOR INSPECTION PRIOR TO GEOTEXTILE AND SAND LAYER PLACEMENT.

INFILTRATION BASIN WITH INTERCEPTOR LAYER CROSS SECTION

SCALE : NTS

LONG TERM STORMWATER MAINTENANCE PLAN

MAINTENANCE TASK AND SCHEDULE DURING CONSTRUCTION (by Contractor)	Storm Sewer System	Catch Basin Sumps	Catch Basin Inlet Silt Sacks	Swales	Outlet Control Structures	Rip-Rap	Infiltration Basin Forebays	Wetlands	Emergency Wetland Overflow	COMPONENTS: SCHEDULE:	ESTIMATED COST:
TASKS:											
Inspect for sediment accumulation	X	X	X	X	X		X	X		Weekly and after every 1" storm	$ 1,000
Removal of sediment accumulation	X	X	X	X	X	X	X	X		As needed and prior to turnover	$ 4,000
Inspect for floatable and debris	X	X	X	X	X		X	X	X	Quarterly and after every 1" storm	$ 500
Cleaning of floatable and debris	X	X	X	X	X		X	X	X	Quarterly, as needed, and at	$ 1,500
Inspect for erosion				X	X	X	X	X	X	Weekly*	$ 1,000
Establish permanent vegetation on eroded slopes				X			X	X	X	As needed and prior to turnover	$ 5,000
Replacement of gravel filters					X		X			As needed	$ 6,000
Make adjustments or replacements as determined by pre-turnover	X	X	X	X	X	X	X	X	X	As needed	$ 5,000
										Total Construction Phase Cost Estimate	$ 24,000

* And as required for NPDES
* "As Needed" means when sediment has accumulated to one foot depth.

MAINTENANCE TASK AND SCHEDULE DURING CONSTRUCTION (by Contractor)	Storm Sewer System	Catch Basin Sumps	Catch Basin Inlet Silt Sacks	Swales	Outlet Control Structures	Rip-Rap	Infiltration Basin Forebays	Wetlands	Emergency Wetland Overflow	COMPONENTS: SCHEDULE:	ESTIMATED COST:
TASKS:											
Inspect for sediment accumulation	X	X	X	X	X		X	X		Weekly and after every 1" storm	$ 1,000
Removal of sediment accumulation	X	X	X	X	X	X	X	X		As needed and prior to turnover	$ 4,000
Inspect for floatable and debris	X	X	X	X	X		X	X	X	Quarterly and after every 1" storm	$ 500
Cleaning of floatable and debris	X	X	X	X	X		X	X	X	Quarterly, as needed, and at	$ 1,500
Inspect for erosion				X	X	X	X	X	X	Weekly*	$ 1,000
Establish permanent vegetation on eroded slopes				X			X	X	X	As needed and prior to turnover	$ 5,000
Replacement of gravel filters					X		X			As needed	$ 6,000
Make adjustments or replacements as determined by pre-turnover	X	X	X	X	X	X	X	X	X	As needed	$ 5,000
										Total Construction Phase Cost Estimate	$ 24,000

* And as required for NPDES
* "As Needed" means when sediment has accumulated to one foot depth.

CERTIFICATE OF OUTLET

ENGINEER'S CERTIFICATE OF OUTLET

Date: 08/27/21

Development Name: 3991 Dexter Ann-Arbor Road

City, Village or Township of Scio Township Section: 23

Washtenaw County, Michigan

Based on the composition of existing sandy soils on-site and the design of the storm water management systems, the 100-year / 24-hour rain event for a majority of the developed site will be infiltrated in under 48 hours and will only contribute flow to the Dexter-Ann Arbor Road right-of-way during extreme events exceeding that amount of rainfall. For a small portion of the developed site a detention basin is sized to detain a volume equal to 120% of the 100-year / 24-hour rain event and slowly discharge water at a controlled rate meeting requirements of the Washtenaw County Water Resources Commissioner rules & guidelines. Therefore, discharge rates will be decreased significantly from existing conditions and will not have a detrimental impact to the downstream drainage courses. In light of the fact that a majority of the developed site will be fully infiltrated and only potentially contribute water downstream during storms exceeding the 100-year / 24-hour event, detailed outlet calculations have not been prepared.

I hereby certify that the existing drainage courses are the only reasonable achievable storm water outlets for the proposed storm water management systems and that the existing drainage courses have sufficient capacity to serve as adequate outlets for the proposed systems, without detriment to, or diminution of, the drainage service that the existing outlets presently provide.

Signed: _____
Ted Hirsch, PE #6201065179
Registered Professional Engineer

The underground utilities shown have been located from field survey information and existing records. The surveyor makes no guarantees that the underground utilities shown comprise all such utilities in the area, either in-service or abandoned. The surveyor further does not warrant that the underground utilities shown are in the exact location indicated. Although the surveyor does certify that they are located as accurately as possible from the information available.

MIDWESTERN CONSULTING
3815 Plaza Drive, Ann Arbor, Michigan 48108
(734) 995-0200 • www.midwesternconsulting.com
Land Development • Land Survey • Institutional • Municipal
Wireless Communications • Transportation • Landfill Services

CLIENT
NORFOLK DEVELOPMENT CORPORATION
8178 JACKSON RD., SUITE D
ANN ARBOR, MI 48108
JIM HAEUSSLER
(734) 260-9678

3991 DEXTER-ANN ARBOR RD

PRELIMINARY PLANNED UNIT DEVELOPMENT
STORMWATER DETAILS

13

DATE:
SHEET OF 20
CADD:
ENG: RWL2
PM: TJC
TECH:
/17310DT1

JOB No. 17310

REVISIONS:	REV. DATE
PER MUNICIPAL REVIEW	11/05/21

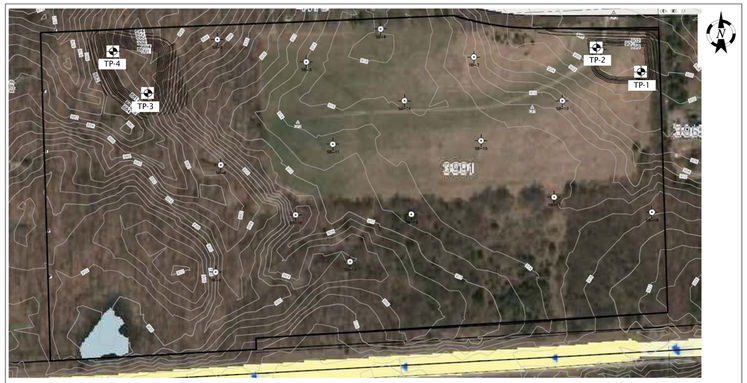

Legend

Test Pit Locations

Test Pit Location Plan
Knights of Columbus
3991 Dexter Ann Arbor Road
Scio Township, Michigan

Project No. 183022	
Drawn by: RRK	
Date: 1/26/18	Plate No. 1
Scale: NTS	

CONSULTING GROUP

Project Name: Dexter-Ann Arbor Road Infiltration Testing
Project Location: Scio Township, Michigan
G2 Project No. 183022
Latitude: N/A Longitude: N/A

Test Pit No. TP-1

CONSULTING GROUP

SUBSURFACE PROFILE				SOIL SAMPLE DATA				
ELEV. (ft)	PRO-FILE	GROUND SURFACE ELEVATION: 900.0 ft ±	DEPTH (ft)	SAMPLE TYPE/NO.	DRY DENSITY (PCF)	MOISTURE CONTENT (%)	PERCENT COMPACTION	UNCOF. COMP. ST. (PSF)
		Topsoil: Dark Brown Silty Sand (15 inches) 1.3		S-01				
		Brown Silty Sand with trace gravel 3.5		S-02				
895.0		Brown Sand with trace silt and gravel, occasional cobbles and boulders (Infiltration Rate = 13.38 iph) 5.0	5	S-03				
890.0		End of Test Pit @ 5 ft	10					
885.0			15					

Total Depth: 5 ft
Excavation Date: January 25, 2018
Inspector: R. Kurdyla
Contractor: Nixon Services
Operator: Ryan Nixon

Excavation Equipment:
Backhoe

Water Level Observation:
Dry during and upon completion of excavation operations

Excavation Backfilling Procedure:
Excavation backfilled with excavated soils

Figure No. 1

TEST PIT 183022.GPJ 20150116 G2 CONSULTING DATA TEMPLATE.GDT 2/6/18

Project Name: Dexter-Ann Arbor Road Infiltration Testing
Project Location: Scio Township, Michigan
G2 Project No. 183022
Latitude: N/A Longitude: N/A

Test Pit No. TP-3

CONSULTING GROUP

SUBSURFACE PROFILE				SOIL SAMPLE DATA				
ELEV. (ft)	PRO-FILE	GROUND SURFACE ELEVATION: 891.0 ft ±	DEPTH (ft)	SAMPLE TYPE/NO.	DRY DENSITY (PCF)	MOISTURE CONTENT (%)	PERCENT COMPACTION	UNCOF. COMP. ST. (PSF)
		Topsoil: Dark Brown Silty Sand (12 inches) 1.0		S-01				
		Brown Sandy Silt with trace gravel 3.0		S-02				
886.0		Brown Silty Sand with trace gravel (Infiltration Rate = 0.19 iph) Percent Finer Than No. 200 Sieve - 34.2% 9.0	5	S-03				
881.0		End of Test Pit @ 9 ft	10					
876.0			15					

Total Depth: 9 ft
Excavation Date: January 25, 2018
Inspector: R. Kurdyla
Contractor: Nixon Services
Operator: Ryan Nixon

Excavation Equipment:
Backhoe

Water Level Observation:
Dry during and upon completion of excavation operations

Excavation Backfilling Procedure:
Excavation backfilled with excavated soils

Figure No. 3

TEST PIT 183022.GPJ 20150116 G2 CONSULTING DATA TEMPLATE.GDT 2/6/18

Project Name: Dexter-Ann Arbor Road Infiltration Testing
Project Location: Scio Township, Michigan
G2 Project No. 183022
Latitude: N/A Longitude: N/A

Test Pit No. TP-2

CONSULTING GROUP

SUBSURFACE PROFILE				SOIL SAMPLE DATA				
ELEV. (ft)	PRO-FILE	GROUND SURFACE ELEVATION: 899.0 ft ±	DEPTH (ft)	SAMPLE TYPE/NO.	DRY DENSITY (PCF)	MOISTURE CONTENT (%)	PERCENT COMPACTION	UNCOF. COMP. ST. (PSF)
		Topsoil: Dark Brown Silty Sand (23 inches) 1.9		S-01				
		Brown Silty Sand with trace gravel 4.0		S-02				
894.0		Brown Sand and Gravel with trace silt, occasional cobbles and boulders (Infiltration Rate = 42.19 iph) 5.0	5	S-03				
889.0		End of Test Pit @ 5 ft	10					
884.0			15					

Total Depth: 5 ft
Excavation Date: January 25, 2018
Inspector: R. Kurdyla
Contractor: Nixon Services
Operator: Ryan Nixon

Excavation Equipment:
Backhoe

Water Level Observation:
Dry during and upon completion of excavation operations

Excavation Backfilling Procedure:
Excavation backfilled with excavated soils

Figure No. 2

TEST PIT 183022.GPJ 20150116 G2 CONSULTING DATA TEMPLATE.GDT 2/6/18

Project Name: Dexter-Ann Arbor Road Infiltration Testing
Project Location: Scio Township, Michigan
G2 Project No. 183022
Latitude: N/A Longitude: N/A

Test Pit No. TP-4

CONSULTING GROUP

SUBSURFACE PROFILE				SOIL SAMPLE DATA				
ELEV. (ft)	PRO-FILE	GROUND SURFACE ELEVATION: 889.0 ft ±	DEPTH (ft)	SAMPLE TYPE/NO.	DRY DENSITY (PCF)	MOISTURE CONTENT (%)	PERCENT COMPACTION	UNCOF. COMP. ST. (PSF)
		Topsoil: Dark Brown Silty Sand (11 inches) 0.9		S-01				
		Brown Sandy Silt with trace gravel 4.0		S-02				
884.0		Brown Sand and Silt with trace gravel (Infiltration Rate = 0.0 iph) 9.0	5	S-03				
879.0		End of Test Pit @ 9 ft	10					
874.0			15					

Total Depth: 9 ft
Excavation Date: January 25, 2018
Inspector: R. Kurdyla
Contractor: Nixon Services
Operator: Ryan Nixon

Excavation Equipment:
Backhoe

Water Level Observation:
Dry during and upon completion of excavation operations

Excavation Backfilling Procedure:
Excavation backfilled with excavated soils

Figure No. 4

TEST PIT 183022.GPJ 20150116 G2 CONSULTING DATA TEMPLATE.GDT 2/6/18

M:\Civil3d_Proj\17310\Plan Pkg\17310DR1.dwg, 11/8/2021 10:08 AM, Quinn C. Foster, TEST PIT LOGS, MCLLC PDF pc3

Copyright © 2021 Midwestern Consulting, L.L.C. All rights reserved. No part of this drawing may be used or reproduced in any form or by any means, or stored in a database or retrieval system, without prior permission of Midwestern Consulting, L.L.C.

The underground utilities shown have been located from field survey information and existing records. The surveyor makes no guarantees that the underground utilities shown comprise all such utilities in the area, either in-service or abandoned. The surveyor further does not warrant that the underground utilities shown are in the exact location indicated. Although the surveyor does certify that they are located as accurately as possible from the information available.

MIDWESTERN CONSULTING
3815 Plaza Drive, Ann Arbor, Michigan 48108
(734) 995-0200 • www.midwesternconsulting.com
Land Development • Land Survey • Institutional • Municipal
Wireless Communications • Transportation • Landfill Services

CLIENT
NORFOLK DEVELOPMENT CORPORATION
8178 JACKSON RD., SUITE D
ANN ARBOR, MI 48108
JIM HAEUSSLER
(734) 260-9678

3991 DEXTER-ANN ARBOR RD

PRELIMINARY PLANNED UNIT DEVELOPMENT
TEST PIT LOGS

14

JOB No. 17310
DATE: 8/27/21
SHEET 14 OF 20
CADD: RWL
ENG: RWL2
PM: TJC
TECH:
/17310DR1

REVISIONS:
PER MUNICIPAL REVIEW — REV. DATE 11/05/21

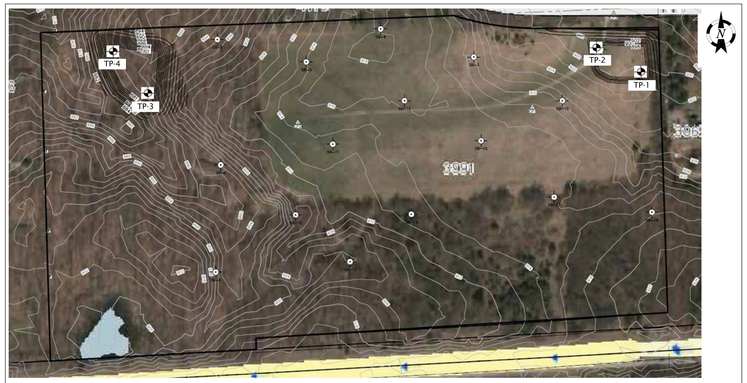

Legend

Test Pit Locations

Test Pit Location Plan
Knights of Columbus
3991 Dexter Ann Arbor Road
Scio Township, Michigan

Project No. 183022	
Drawn by: RRK	
Date: 1/26/18	Plate No. 1
Scale: NTS	

CONSULTING GROUP

Project Name: Dexter-Ann Arbor Road Infiltration Testing
Project Location: Scio Township, Michigan
G2 Project No. 183022
Latitude: N/A Longitude: N/A

Test Pit No. TP-1

CONSULTING GROUP

SUBSURFACE PROFILE				SOIL SAMPLE DATA				
ELEV. (ft)	PRO-FILE	GROUND SURFACE ELEVATION: 900.0 ft ±	DEPTH (ft)	SAMPLE TYPE/NO.	DRY DENSITY (PCF)	MOISTURE CONTENT (%)	PERCENT COMPACTION	UNCOF. COMP. ST. (PSF)
		Topsoil: Dark Brown Silty Sand (15 inches) 1.3		S-01				
		Brown Silty Sand with trace gravel 3.5		S-02				
895.0		Brown Sand with trace silt and gravel, occasional cobbles and boulders (Infiltration Rate = 13.38 iph) 5.0	5	S-03				
890.0		End of Test Pit @ 5 ft	10					
885.0			15					

Total Depth: 5 ft
Excavation Date: January 25, 2018
Inspector: R. Kurdyla
Contractor: Nixon Services
Operator: Ryan Nixon

Excavation Equipment:
Backhoe

Water Level Observation:
Dry during and upon completion of excavation operations

Excavation Backfilling Procedure:
Excavation backfilled with excavated soils

Figure No. 1

TEST PIT 183022.GPJ 20150116 G2 CONSULTING DATA TEMPLATE.GDT 2/6/18

Project Name: Dexter-Ann Arbor Road Infiltration Testing
Project Location: Scio Township, Michigan
G2 Project No. 183022
Latitude: N/A Longitude: N/A

Test Pit No. TP-3

CONSULTING GROUP

SUBSURFACE PROFILE				SOIL SAMPLE DATA				
ELEV. (ft)	PRO-FILE	GROUND SURFACE ELEVATION: 891.0 ft ±	DEPTH (ft)	SAMPLE TYPE/NO.	DRY DENSITY (PCF)	MOISTURE CONTENT (%)	PERCENT COMPACTION	UNCOF. COMP. ST. (PSF)
		Topsoil: Dark Brown Silty Sand (12 inches) 1.0		S-01				
		Brown Sandy Silt with trace gravel 3.0		S-02				
886.0		Brown Silty Sand with trace gravel (Infiltration Rate = 0.19 iph) Percent Finer Than No. 200 Sieve - 34.2% 9.0	5	S-03				
881.0		End of Test Pit @ 9 ft	10					
876.0			15					

Total Depth: 9 ft
Excavation Date: January 25, 2018
Inspector: R. Kurdyla
Contractor: Nixon Services
Operator: Ryan Nixon

Excavation Equipment:
Backhoe

Water Level Observation:
Dry during and upon completion of excavation operations

Excavation Backfilling Procedure:
Excavation backfilled with excavated soils

Figure No. 3

TEST PIT 183022.GPJ 20150116 G2 CONSULTING DATA TEMPLATE.GDT 2/6/18

Project Name: Dexter-Ann Arbor Road Infiltration Testing
Project Location: Scio Township, Michigan
G2 Project No. 183022
Latitude: N/A Longitude: N/A

Test Pit No. TP-2

CONSULTING GROUP

SUBSURFACE PROFILE				SOIL SAMPLE DATA				
ELEV. (ft)	PRO-FILE	GROUND SURFACE ELEVATION: 899.0 ft ±	DEPTH (ft)	SAMPLE TYPE/NO.	DRY DENSITY (PCF)	MOISTURE CONTENT (%)	PERCENT COMPACTION	UNCOF. COMP. ST. (PSF)
		Topsoil: Dark Brown Silty Sand (23 inches) 1.9		S-01				
		Brown Silty Sand with trace gravel 4.0		S-02				
894.0		Brown Sand and Gravel with trace silt, occasional cobbles and boulders (Infiltration Rate = 42.19 iph) 5.0	5	S-03				
889.0		End of Test Pit @ 5 ft	10					
884.0			15					

Total Depth: 5 ft
Excavation Date: January 25, 2018
Inspector: R. Kurdyla
Contractor: Nixon Services
Operator: Ryan Nixon

Excavation Equipment:
Backhoe

Water Level Observation:
Dry during and upon completion of excavation operations

Excavation Backfilling Procedure:
Excavation backfilled with excavated soils

Figure No. 2

TEST PIT 183022.GPJ 20150116 G2 CONSULTING DATA TEMPLATE.GDT 2/6/18

Project Name: Dexter-Ann Arbor Road Infiltration Testing
Project Location: Scio Township, Michigan
G2 Project No. 183022
Latitude: N/A Longitude: N/A

Test Pit No. TP-4

CONSULTING GROUP

SUBSURFACE PROFILE				SOIL SAMPLE DATA				
ELEV. (ft)	PRO-FILE	GROUND SURFACE ELEVATION: 889.0 ft ±	DEPTH (ft)	SAMPLE TYPE/NO.	DRY DENSITY (PCF)	MOISTURE CONTENT (%)	PERCENT COMPACTION	UNCOF. COMP. ST. (PSF)
		Topsoil: Dark Brown Silty Sand (11 inches) 0.9		S-01				
		Brown Sandy Silt with trace gravel 4.0		S-02				
884.0		Brown Sand and Silt with trace gravel (Infiltration Rate = 0.0 iph) 9.0	5	S-03				
879.0		End of Test Pit @ 9 ft	10					
874.0			15					

Total Depth: 9 ft
Excavation Date: January 25, 2018
Inspector: R. Kurdyla
Contractor: Nixon Services
Operator: Ryan Nixon

Excavation Equipment:
Backhoe

Water Level Observation:
Dry during and upon completion of excavation operations

Excavation Backfilling Procedure:
Excavation backfilled with excavated soils

Figure No. 4

TEST PIT 183022.GPJ 20150116 G2 CONSULTING DATA TEMPLATE.GDT 2/6/18

M:\Civil3d_Prj\17310\Prelim Plat\17310DR1.dwg, 11/8/2021 10:08 AM, Quinn C. Foster, TEST PIT LOGS, MCLLC PDF pc3

Copyright © 2021 Midwestern Consulting, L.L.C. All rights reserved. No part of this drawing may be used or reproduced in any form or by any means, or stored in a database or retrieval system, without prior permission of Midwestern Consulting, L.L.C.

The underground utilities shown have been located from field survey information and existing records. The surveyor makes no guarantees that the underground utilities shown comprise all such utilities in the area, either in-service or abandoned. The surveyor further does not warrant that the underground utilities shown are in the exact location indicated. Although the surveyor does certify that they are located as accurately as possible from the information available.

MIDWESTERN CONSULTING
3815 Plaza Drive, Ann Arbor, Michigan 48108
(734) 995-0200 • www.midwesternconsulting.com
Land Development • Land Survey • Institutional • Municipal
Wireless Communications • Transportation • Landfill Services

CLIENT
NORFOLK DEVELOPMENT CORPORATION
8178 JACKSON RD., SUITE D
ANN ARBOR, MI 48108
JIM HAEUSSLER
(734) 260-9678

3991 DEXTER-ANN ARBOR RD

PRELIMINARY PLANNED UNIT DEVELOPMENT
TEST PIT LOGS

14

JOB No. 17310
DATE: 8/27/21
SHEET 14 OF 20
CADD: RWL
ENG: RWL2
PM: TJC
TECH:
/17310DR1

REVISIONS:
PER MUNICIPAL REVIEW — REV. DATE 11/05/21



SCALE: 1" = 40'

0 40 80 120

LEGEND

- 827 — EXIST. CONTOUR
- ×827.2 — EXIST. SPOT ELEVATION
- U.P. — EXIST. UTILITY POLE
- GUY WIRE
- OH — EXIST. OVERHEAD UTILITY LINE
- EXIST. GAS VALVE
- CULVERT
- C/L OF DITCH
- SIGN
- MAILBOX
- TELEPHONE RISER
- CABLE TELEVISION RISER
- FIBER OPTIC MARKER
- POST
- FENCE
- OPEN WATER BOUNDARY
- OPEN WATER SETBACK
- SINGLE TREE
- LANDMARK TREE
- TREE OR BRUSH LIMIT
- O F — FOUND IRON PIPE
- CONTROL PT.
- TP-1 — INFILTRATION TEST PITS
- SB-1 — SOIL BORINGS
- EXISTING TREE TO BE REMOVED
- LIMITS OF DISTURBANCE
- PROPOSED MOWED PATH

Know what's below. Call before you dig. 811

The underground utilities shown have been located from field survey information and existing records. The surveyor makes no guarantees that the underground utilities shown comprise all such utilities in the area, either in-service or abandoned. The surveyor further does not warrant that the underground utilities shown are in the exact location indicated. Although the surveyor does certify that they are located as accurately as possible from the information available.

M:\Civil3d_Proj\17310\Prelim Plat\17310EX2.dwg, 11/8/2021 10:09 AM, Quinn C. Foster, TREE REMOVAL PLAN 1 OF 2, MCLLC PDF pc3
Copyright © 2021 Midwestern Consulting, L.L.C. All rights reserved. No part of this drawing may be used or reproduced in any form or by any means, or stored in a database or retrieval system, without prior permission of Midwestern Consulting, L.L.C.

MIDWESTERN CONSULTING
3815 Plaza Drive, Ann Arbor, Michigan 48108
(734) 995-0200 • www.midwesternconsulting.com
Land Development • Land Survey • Institutional • Municipal
Wireless Communications • Transportation • Landfill Services

CLIENT
NORFOLK DEVELOPMENT CORPORATION
8178 JACKSON RD., SUITE D
ANN ARBOR, MI 48108
JIM HAEUSSLER
(734) 260-9678

3991 DEXTER-ANN ARBOR RD

PRELIMINARY PLANNED UNIT DEVELOPMENT
TREE REMOVAL PLAN 1 OF 2

16

JOB No. 17310

DATE: 8/27/21
SHEET 16 OF 20
CADD: RWL
ENG: RWL2
PM: TJC
TECH:
/17310EX2

REVISIONS:	REV. DATE
PER MUNICIPAL REVIEW	11/05/21

M:\Civil3d_Pro\17310\Prelim PUD\17310EX2.dwg, 11/8/2021 10:09 AM, Quinn C. Foster, TREE REMOVAL PLAN 2 OF 2, MCLLC PDF.pc3
Copyright © 2021 Midwestern Consulting, L.L.C. All rights reserved. No part of this drawing may be used or reproduced in any form or by any means, or stored in a database or retrieval system, without prior permission of Midwestern Consulting, L.L.C.



The underground utilities shown have been located from field survey information and existing records. The surveyor makes no guarantees that the underground utilities shown comprise all such utilities in the area, either in-service or abandoned. The surveyor further does not warrant that the underground utilities shown are in the exact location indicated. Although the surveyor does certify that they are located as accurately as possible from the information available.

Know what's below. Call before you dig. 811

MIDWESTERN CONSULTING
3815 Plaza Drive, Ann Arbor, Michigan 48108
(734) 995-0200 • www.midwesternconsulting.com
Land Development • Land Survey • Institutional • Municipal
Wireless Communications • Transportation • Landfill Services

CLIENT
NORFOLK DEVELOPMENT CORPORATION
8178 JACKSON RD., SUITE D
ANN ARBOR, MI 48108
JIM HAEUSSLER
(734) 260-9678

3991 DEXTER-ANN ARBOR RD

PRELIMINARY PLANNED UNIT DEVELOPMENT
TREE REMOVAL PLAN 2 OF 2

17

JOB No. 17310

REVISIONS:	REV. DATE
PER MUNICIPAL REVIEW	11/05/21

DATE: 8/27/21
SHEET 17 OF 20
CADD: RML
ENG: RWL2
PM: TJC
TECH:
/17310EX2

TAG	DBH	COMMON NAME	GENUS/SPECIES	STEMS	HEALTH	INV	LM	PROTECTED	REMOVAL
1	38"	Red Oak	Quercus rubra				X		
2	43"	White Oak	Quercus alba				X		
3	14"	Sweet Cherry	Prunus avuim			X			
4	6"	Sassafras	Sassafras albidum					X	
5	10"	Sassafras	Sassafras albidum					X	
6	13"	Red Oak	Quercus rubra					X	
7	14"	Black Cherry	Prunus serotina					X	
8	12"	Sassafras	Sassafras albidum				X		
9	9"	Black Cherry	Prunus serotina					X	
10	7"	Sassafras	Sassafras albidum					X	
11	9"	Sassafras	Sassafras albidum					X	
12	7"	Sassafras	Sassafras albidum					X	
13	8"	Black Cherry	Prunus serotina					X	
14	10"	Pignut Hickory	Carya glabra					X	
15	7"	Sassafras	Sassafras albidum					X	
16	6"	Sassafras	Sassafras albidum					X	
17	6"	Sassafras	Sassafras albidum					X	
18	7"	Red Oak	Quercus rubra					X	
19	9"	Red Oak	Quercus rubra					X	
20	8"	Red Oak	Quercus rubra					X	
21	30"	Red Oak	Quercus rubra				X		
22	30"	White Oak	Quercus alba				X		
23	6"	Sassafras	Sassafras albidum					X	
24	20"	White Oak	Quercus alba				X		
25	10"	Linden	Tilia americana					X	
26	9"	Sassafras	Sassafras albidum					X	
27	6"	Shagbark Hickory	Carya ovata					X	
28	7"	Sassafras	Sassafras albidum					X	
29	8"	Black Cherry	Prunus serotina	twin				X	
30	7"	Black Cherry	Prunus serotina					X	
31	6"	Red Oak	Quercus rubra					X	
32	12"	Red Oak	Quercus rubra					X	
33	9"	Scotch Pine	Pinus sylvestris				X		
34	9"	Scotch Pine	Pinus sylvestris	twin			X		
35	40"	Red Oak	Quercus rubra				X		
36	10"	Sweet Cherry	Prunus avuim				X		
37	7"	Sweet Cherry	Prunus avuim				X		
38	9"	Sweet Cherry	Prunus avuim				X		
39	30"	White Oak	Quercus alba			X			
40	21"	Red Oak	Quercus rubra		FAIR		X		
41	36"	Red Oak	Quercus rubra				X		
42	9"	Black Cherry	Prunus serotina					X	
43	6"	Black Cherry	Prunus serotina					X	
44	8"	Box Elder	Acer negundo				X		
45	7"	American Elm	Ulmus americana					X	
46	7"	Swamp White Oak	Quercus bicolor					X	
47	8"	Swamp White Oak	Quercus bicolor					X	
48	27"	Red Oak	Quercus rubra				X		X
49	29"	Red Oak	Quercus rubra				X		X
50	11"	American Elm	Ulmus americana					X	X
51	26"	Black Cherry	Prunus serotina				X		X
52	10"	White Mulberry	Morus alba				X		X
53	7"	Scotch Pine	Pinus sylvestris				X		
54	32"	Red Oak	Quercus rubra					X	X
55	32"	Black Cherry	Prunus serotina				X		X
56	6"	Shagbark Hickory	Carya ovata					X	
57	14"	Norway Maple	Acer platanoides				X		
58	17"	White Oak	Quercus alba					X	
59	13"	Scotch Pine	Pinus sylvestris				X		
60	10"	Black Cherry	Prunus serotina					X	
61	17"	Red Oak	Quercus rubra					X	
62	10"	Scotch Pine	Pinus sylvestris				X		X
63	7"	Red Oak	Quercus rubra					X	
64	12"	Scotch Pine	Pinus sylvestris				X		
65	16"	Black Cherry	Prunus serotina					X	
66	12"	Black Cherry	Prunus serotina					X	
67	6"	Black Cherry	Prunus serotina					X	
68	8"	Black Cherry	Prunus serotina					X	
69	11"	Black Cherry	Prunus serotina					X	
70	6"	Shagbark Hickory	Carya ovata					X	
71	14"	Black Cherry	Prunus serotina					X	
72	13"	Black Cherry	Prunus serotina					X	
73	7"	Black Cherry	Prunus serotina					X	
74	19"	Black Cherry	Prunus serotina					X	
75	8"	Black Cherry	Prunus serotina					X	
76	18"	Red Oak	Quercus rubra				X		
77	12"	Red Oak	Quercus rubra					X	
78	19"	Black Cherry	Prunus serotina		POOR		X		
79	26"	Black Cherry	Prunus serotina		POOR		X		
80	16"	Black Cherry	Prunus serotina					X	
81	10"	Sassafras	Sassafras albidum					X	
82	10"	Sugar Maple	Acer saccharum					X	
83	8"	Black Maple	Acer nigrum					X	
84	12"	Red Oak	Quercus rubra					X	
85	7"	Shagbark Hickory	Carya ovata					X	
86	21"	Black Cherry	Prunus serotina				X		
87	9"	Black Maple	Acer nigrum					X	
88	13"	Red Oak	Quercus rubra					X	
89	28"	Black Cherry	Prunus serotina		POOR		X		
90	8"	Red Oak	Quercus rubra					X	
91	19"	Black Cherry	Prunus serotina					X	
92	28"	Pignut Hickory	Carya glabra				X		
93	7"	Pignut Hickory	Carya glabra					X	
94	14"	White Oak	Quercus alba					X	
95	7"	American Elm	Ulmus americana					X	
96	7"	Red Oak	Quercus rubra					X	
97	11"	Red Oak	Quercus rubra					X	
98	30"	Black Cherry	Prunus serotina		POOR		X		
99	16"	Red Oak	Quercus rubra					X	
100	18"	Black Cherry	Prunus serotina		POOR			X	
101	21"	Black Cherry	Prunus serotina		POOR		X		
102	33"	Black Cherry	Prunus serotina					X	
103	7"	Red Oak	Quercus rubra					X	
104	8"	Red Oak	Quercus rubra					X	
105	12"	Black Cherry	Prunus serotina					X	
106	9"	Sassafras	Sassafras albidum					X	
107	9"	Sassafras	Sassafras albidum					X	
108	21"	Black Cherry	Prunus serotina					X	
109	9"	Sassafras	Sassafras albidum					X	
110	16"	Sassafras	Sassafras albidum					X	
111	8"	Red Oak	Quercus rubra					X	
112	7"	Red Oak	Quercus rubra					X	
113	22"	Box Elder	Acer negundo		POOR		X		
114	19"	Black Cherry	Prunus serotina					X	
115	13"	Red Oak	Quercus rubra					X	
116	7"	Scotch Pine	Pinus sylvestris				X		
117	7"	Red Oak	Quercus rubra					X	
118	6"	Red Oak	Quercus rubra					X	
119	13"	Scotch Pine	Pinus sylvestris				X		
120	7"	Sassafras	Sassafras albidum					X	
121	14"	Red Oak	Quercus rubra					X	
122	9"	Red Oak	Quercus rubra	twin				X	
123	8"	Red Oak	Quercus rubra					X	
124	9"	Scotch Pine	Pinus sylvestris				X		
125	10"	Red Oak	Quercus rubra					X	
126	10"	Red Oak	Quercus rubra	twin				X	
127	15"	Scotch Pine	Pinus sylvestris				X		X
128	12"	Red Oak	Quercus rubra					X	
129	10"	Red Oak	Quercus rubra	twin				X	
130	10"	Scotch Pine	Pinus sylvestris				X		
131	10"	Scotch Pine	Pinus sylvestris				X		
132	7"	Red Oak	Quercus rubra					X	
133	10"	Black Cherry	Prunus serotina					X	
134	8"	Black Cherry	Prunus serotina					X	
135	13"	Black Cherry	Prunus serotina					X	
136	34"	Red Oak	Quercus rubra					X	
137	26"	Red Oak	Quercus rubra					X	
138	10"	White Oak	Quercus alba					X	
139	13"	White Oak	Quercus alba	triple				X	
140	16"	White Oak	Quercus alba					X	
141	6"	Pignut Hickory	Carya glabra	twin				X	
142	9"	Sweet Cherry	Prunus avuim				X		
143	9"	Sweet Cherry	Prunus avuim				X		
144	13"	White Oak	Quercus alba					X	
145	21"	Pignut Hickory	Carya glabra					X	
146	9"	Sweet Cherry	Prunus avuim				X		
147	8"	Sweet Cherry	Prunus avuim				X		
148	23"	White Oak	Quercus alba					X	
149	30"	Red Oak	Quercus rubra					X	
150	8"	Black Cherry	Prunus serotina					X	
151	8"	American Elm	Ulmus americana					X	
152	6"	Shagbark Hickory	Carya ovata					X	
153	8"	Shagbark Hickory	Carya ovata					X	
154	7"	Sweet Cherry	Prunus avuim				X		
155	8"	Black Cherry	Prunus serotina					X	
156	7"	Black Cherry	Prunus serotina					X	
157	10"	Black Cherry	Prunus serotina					X	
158	7"	Shagbark Hickory	Carya ovata					X	
159	10"	Red Oak	Quercus rubra					X	
160	6"	Red Oak	Quercus rubra					X	
161	17"	Red Oak	Quercus rubra					X	
162	8"	Black Cherry	Prunus serotina					X	
163	9"	Black Cherry	Prunus serotina					X	
164	20"	Red Oak	Quercus rubra				X		X
165	27"	White Oak	Quercus alba					X	X
166	9"	Shagbark Hickory	Carya ovata					X	X
167	12"	Scotch Pine	Pinus sylvestris				X		X
168	8"	Shagbark Hickory	Carya ovata					X	X
169	16"	Red Oak	Quercus rubra					X	X
170	17"	Red Oak	Quercus rubra					X	X
171	7"	White Oak	Quercus alba					X	X
172	7"	Shagbark Hickory	Carya ovata					X	X
173	14"	Black Cherry	Prunus serotina	twin				X	X
174	15"	Black Cherry	Prunus serotina	triple				X	X
175	7"	White Mulberry	Morus alba				X		X
176	8"	Black Cherry	Prunus serotina					X	X
177	6"	Red Maple	Acer rubrum					X	X
178	8"	Black Cherry	Prunus serotina					X	X
179	20"	Red Oak	Quercus rubra				X		X
180	13"	Red Oak	Quercus rubra					X	X
181	16"	Black Cherry	Prunus serotina					X	X
182	10"	Black Cherry	Prunus serotina	twin				X	X
183	19"	Black Cherry	Prunus serotina					X	X
184	19"	Red Oak	Quercus rubra				X		X

TAG	DBH	COMMON NAME	GENUS/SPECIES	STEMS	HEALTH	INV	LM	PROTECTED	REMOVAL
185	13"	Black Cherry	Prunus serotina	twin	FAIR			X	X
186	17"	Black Cherry	Prunus serotina					X	X
187	14"	Black Cherry	Prunus serotina					X	X
188	11"	Black Cherry	Prunus serotina					X	X
189	14"	Black Cherry	Prunus serotina	triple	FAIR			X	X
190	11"	Black Cherry	Prunus serotina	twin				X	X
191	14"	Black Cherry	Prunus serotina	twin				X	X
192	17"	Black Cherry	Prunus serotina					X	X
193	15"	Black Cherry	Prunus serotina					X	X
194	11"	Red Oak	Quercus rubra	twin				X	X
195	22"	Red Oak	Quercus rubra				X		X
196	17"	Red Oak	Quercus rubra					X	X
197	13"	Black Cherry	Prunus serotina					X	X
198	8"	Common Apple	Malus pumila					X	X
199	9"	Common Apple	Malus pumila					X	
200	7"	Common Apple	Malus pumila	twin				X	
201	7"	Common Apple	Malus pumila	twin				X	X
202	8"	Common Apple	Malus pumila					X	
203	7"	Black Cherry	Prunus serotina					X	
204	6"	Black Cherry	Prunus serotina					X	
205	10"	Black Cherry	Prunus serotina					X	
206	7"	Black Cherry	Prunus serotina					X	
207	9"	Common Apple	Malus pumila					X	
208	14"	Black Cherry	Prunus serotina					X	
209	6"	Black Cherry	Prunus serotina					X	
210	13"	Scotch Pine	Pinus sylvestris					X	X
211	17"	Red Oak	Quercus rubra					X	X
212	11"	Black Cherry	Prunus serotina					X	
213	7"	Black Cherry	Prunus serotina					X	
214	11"	Common Apple	Malus pumila					X	
215	10"	Black Cherry	Prunus serotina					X	
216	9"	Black Cherry	Prunus serotina					X	
217	8"	Black Cherry	Prunus serotina					X	X
218	9"	Scotch Pine	Pinus sylvestris					X	X
219	13"	Black Cherry	Prunus serotina					X	X
220	15"	Red Oak	Quercus rubra					X	X
221	14"	Red Oak	Quercus rubra					X	
222	7"	Black Cherry	Prunus serotina					X	
223	6"	Black Cherry	Prunus serotina					X	
224	7"	Shagbark Hickory	Carya ovata					X	
225	15"	Red Oak	Quercus rubra					X	
226	18"	Red Oak	Quercus rubra				X		
227	13"	Red Oak	Quercus rubra					X	
228	8"	Shagbark Hickory	Carya ovata					X	
229	23"	Shagbark Hickory	Carya ovata				X		
230	12"	Shagbark Hickory	Carya ovata					X	
231	21"	Black Cherry	Prunus serotina				X		
232	8"	Black Cherry	Prunus serotina					X	
233	20"	Pignut Hickory	Carya glabra				X		
234	26"	White Oak	Quercus alba				X		
235	14"	White Oak	Quercus alba					X	
236	24"	Norway Maple	Acer platanoides				X		
237	17"	Shagbark Hickory	Carya ovata					X	
238	10"	Sweet Cherry	Prunus avuim				X		
239	13"	Black Cherry	Prunus serotina					X	
240	8"	Sassafras	Sassafras albidum					X	
241	18"	Red Oak	Quercus rubra				X		
242	13"	Red Oak	Quercus rubra					X	
243	7"	Shagbark Hickory	Carya ovata					X	
244	11"	Red Oak	Quercus rubra					X	
245	6"	Red Oak	Quercus rubra					X	
246	12"	Red Oak	Quercus rubra					X	
247	16"	Red Oak	Quercus rubra					X	
248	11"	Red Oak	Quercus rubra					X	
249	21"	Red Oak	Quercus rubra				X		
250	11"	Black Cherry	Prunus serotina	twin				X	
251	10"	Black Cherry	Prunus serotina					X	
252	6"	Black Cherry	Prunus serotina					X	
253	7"	Black Cherry	Prunus serotina					X	
254	12"	Black Cherry	Prunus serotina					X	
255	6"	Common Apple	Malus pumila					X	
256	13"	Black Cherry	Prunus serotina					X	
257	9"	Common Apple	Malus pumila					X	
258	10"	Black Cherry	Prunus serotina					X	
259	8"	Common Apple	Malus pumila					X	
260	8"	Common Apple	Malus pumila					X	
261	7"	Dogwood	Cornus florida					X	
262	7"	Common Apple	Malus pumila	twin				X	
263	9"	Common Apple	Malus pumila	twin				X	
264	11"	Black Cherry	Prunus serotina					X	
265	8"	Common Apple	Malus pumila					X	
266	7"	Common Apple	Malus pumila					X	
267	15"	Black Cherry	Prunus serotina	twin				X	
268	9"	Common Apple	Malus pumila					X	
269	7"	Wild Plum	Prunus americana					X	
270	9"	Common Apple	Malus pumila					X	
271	10"	Common Apple	Malus pumila					X	
272	9"	Red Oak	Quercus rubra					X	
273	16"	Black Cherry	Prunus serotina					X	
274	12"	Black Cherry	Prunus serotina					X	
275	9"	Common Apple	Malus pumila	twin				X	
276	9"	Black Cherry	Prunus serotina					X	
277	7"	Dogwood	Cornus florida	twin				X	
278	6"	Common Apple	Malus pumila					X	
279	8"	Common Apple	Malus pumila					X	
280	12"	Dogwood	Cornus florida				X		
281	20"	Black Cherry	Prunus serotina				X		
282	7"	Common Apple	Malus pumila					X	
283	8"	Common Apple	Malus pumila	twin				X	
284	6"	Common Apple	Malus pumila	quad				X	
285	7"	Wild Plum	Prunus americana					X	
286	8"	Common Apple	Malus pumila					X	
287	11"	Common Apple	Malus pumila					X	
288	7"	Wild Plum	Prunus americana	twin				X	
289	11"	Wild Plum	Prunus americana					X	
290	18"	Black Cherry	Prunus serotina					X	
291	14"	Black Cherry	Prunus serotina	twin				X	
292	9"	Common Apple	Malus pumila					X	
293	7"	Black Cherry	Prunus serotina					X	
294	22"	Red Oak	Quercus rubra				X		
295	10"	Shagbark Hickory	Carya ovata					X	
296	10"	Shagbark Hickory	Carya ovata					X	
297	6"	Black Cherry	Prunus serotina					X	
298	7"	Common Apple	Malus pumila	twin				X	
299	11"	Red Oak	Quercus rubra					X	
300	6"	Shagbark Hickory	Carya ovata					X	
301	31"	Black Cherry	Prunus serotina		POOR		X		
302	25"	White Oak	Quercus alba				X		
303	11"	Black Cherry	Prunus serotina	twin				X	
304	29"	Red Oak	Quercus rubra				X		
305	18"	Red Oak	Quercus rubra		FAIR		X		
306	13"	Red Oak	Quercus rubra	twin				X	
307	7"	Black Cherry	Prunus serotina					X	
308	9"	Shagbark Hickory	Carya ovata					X	
309	13"	Black Cherry	Prunus serotina					X	
310	7"	Scotch Pine	Pinus sylvestris				X		
311	13"	Red Oak	Quercus rubra					X	
312	7"	Red Oak	Quercus rubra					X	
313	11"	Common Apple	Malus pumila					X	
314	8"	Common Apple	Malus pumila	twin				X	
315	8"	Common Apple	Malus pumila					X	
316	7"	Common Apple	Malus pumila					X	
317	7"	Common Apple	Malus pumila					X	
318	11"	Common Apple	Malus pumila					X	
319	8"	Common Apple	Malus pumila					X	
320	10"	Wild Plum	Prunus americana					X	
321	9"	Common Apple	Malus pumila	twin				X	
322	10"	Black Cherry	Prunus serotina					X	
323	6"	Black Cherry	Prunus serotina					X	
324	17"	Black Cherry	Prunus serotina					X	
325	22"	Black Cherry	Prunus serotina		POOR		X		
326	10"	White Mulberry	Morus alba					X	
327	10"	Scotch Pine	Pinus sylvestris	triple				X	
328	11"	Box Elder	Acer negundo					X	
329	9"	Box Elder	Acer negundo					X	
330	7"	Common Apple	Malus pumila	triple				X	
331	14"	American Elm	Ulmus americana					X	
332	11"	Black Cherry	Prunus serotina	twin				X	
333	15"	Black Cherry	Prunus serotina					X	
334	9"	White Mulberry	Morus alba					X	
335	7"	White Mulberry	Morus alba					X	
336	13"	Black Cherry	Prunus serotina					X	
337	17"	Black Cherry	Prunus serotina					X	
338	17"	Black Cherry	Prunus serotina					X	
339	19"	American Elm	Ulmus americana					X	
340	16"	American Elm	Ulmus americana					X	
341	19"	American Elm	Ulmus americana					X	
342	12"	Scotch Pine	Pinus sylvestris	twin				X	
343	7"	Red Oak	Quercus rubra					X	
344	9"	Box Elder	Acer negundo					X	
345	11"	Red Cedar	Juniperus virginiana					X	
346	17"	Black Cherry	Prunus serotina	twin				X	
347	17"	Black Cherry	Prunus serotina					X	
348	9"	Box Elder	Acer negundo					X	
349	14"	American Elm	Ulmus americana					X	
350	13"	Silver Maple	Acer saccharinum	twin				X	
351	13"	Silver Maple	Acer saccharinum					X	
352	11"	American Elm	Ulmus americana					X	
353	13"	Black Cherry	Prunus serotina	twin				X	
354	6"	Silver Maple	Acer saccharinum					X	
355	9"	Scotch Pine	Pinus sylvestris				X		
356	9"	American Elm	Ulmus americana					X	
357	6"	Red Cedar	Juniperus virginiana					X	
358	7"	Common Apple	Malus pumila	quad				X	
359	11"	Black Cherry	Prunus serotina					X	
360	16"	American Elm	Ulmus americana					X	
361	12"	Silver Maple	Acer saccharinum					X	
362	9"	Scotch Pine	Pinus sylvestris				X		
363	9"	Scotch Pine	Pinus sylvestris				X		
364	9"	Scotch Pine	Pinus sylvestris				X		
365	7"	Scotch Pine	Pinus sylvestris				X		
366	11"	Scotch Pine	Pinus sylvestris				X		
367	7"	Black Cherry	Prunus serotina					X	X
368	11"	Silver Maple	Acer saccharinum	twin				X	X

TAG	DBH	COMMON NAME	GENUS/SPECIES	STEMS	HEALTH	INV	LM	PROTECTED	REMOVAL
369	9"	Black Cherry	Prunus serotina					X	X
370	12"	Silver Maple	Acer saccharinum					X	X
371	16"	American Elm	Ulmus americana					X	X
372	9"	American Elm	Ulmus americana					X	X
373	16"	Black Cherry	Prunus serotina					X	X
374	14"	Silver Maple	Acer saccharinum	twin				X	X
375	9"	Scotch Pine	Pinus sylvestris			X			X
376	10"	Scotch Pine	Pinus sylvestris			X			X
377	10"	Scotch Pine	Pinus sylvestris			X			X
378	10"	American Elm	Ulmus americana					X	X
379	13"	Silver Maple	Acer saccharinum	twin				X	X
380	9"	Scotch Pine	Pinus sylvestris			X			X
381	12"	Black Cherry	Prunus serotina	twin	POOR			X	X
382	16"	American Elm	Ulmus americana		POOR			X	X
383	18"	Black Cherry	Prunus serotina	twin	POOR			X	X
384	8"	Box Elder	Acer negundo			X			X
385		Lost Tag	Lost Tag						
386	17"	American Elm	Ulmus americana		POOR			X	X
387	12"	Black Cherry	Prunus serotina					X	X
388	17"	Black Cherry	Prunus serotina					X	X
389	17"	Black Cherry	Prunus serotina					X	X
390	9"	Black Cherry	Prunus serotina					X	X
391	17"	Black Cherry	Prunus serotina					X	X
392	10"	American Elm	Ulmus americana					X	X
393	10"	Silver Maple	Acer saccharinum					X	X
394	8"	Scotch Pine	Pinus sylvestris			X			X
395	10"	Scotch Pine	Pinus sylvestris			X			X
396	7"	Black Cherry	Prunus serotina					X	X
397	6"	Silver Maple	Acer saccharinum	twin				X	X
398	12"	Black Cherry	Prunus serotina					X	X
399	8"	Black Cherry	Prunus serotina					X	X
400	10"	American Elm	Ulmus americana					X	X
401	10"	American Elm	Ulmus americana					X	X
402	9"	Scotch Pine	Pinus sylvestris			X			X
403	6"	Scotch Pine	Pinus sylvestris			X			X
404	20"	American Elm	Ulmus americana				X		X
405	6"	Scotch Pine	Pinus sylvestris			X			X
406	10"	Red Cedar	Juniperus virginiana						X
407	11"	American Elm	Ulmus americana					X	
408	12"	Black Cherry	Prunus serotina					X	
409	8"	Scotch Pine	Pinus sylvestris			X			X
410	7"	Scotch Pine	Pinus sylvestris			X			X
411	8"	Scotch Pine	Pinus sylvestris			X			X
412	8"	Scotch Pine	Pinus sylvestris			X			X
413	9"	Scotch Pine	Pinus sylvestris			X			X
414	8"	Scotch Pine	Pinus sylvestris			X			X
415	8"	Scotch Pine	Pinus sylvestris			X			X
416	13"	White Pine	Pinus strobus					X	
417	15"	White Pine	Pinus strobus					X	
418	7"	Black Cherry	Prunus serotina					X	
419	16"	Silver Maple	Acer saccharinum	twin				X	
420	11"	White Pine	Pinus strobus					X	
421	11"	White Pine	Pinus strobus					X	
422	17"	American Elm	Ulmus americana					X	
423	18"	Black Cherry	Prunus serotina	triple				X	
424	8"	Scotch Pine	Pinus sylvestris			X			X
425	13"	Silver Maple	Acer saccharinum					X	X
426	9"	Silver Maple	Acer saccharinum	twin				X	X
427	13"	Siberian Elm	Ulmus pumila			X			X
428	9"	Scotch Pine	Pinus sylvestris			X			X
429	11"	Silver Maple	Acer saccharinum	twin				X	X
430	12"	Scotch Pine	Pinus sylvestris			X			X
431	11"	Silver Maple	Acer saccharinum	twin				X	
432	10"	Silver Maple	Acer saccharinum					X	
433	17"	Box Elder	Acer negundo			X			X
434	8"	Box Elder	Acer negundo			X			
435	6"	Scotch Pine	Pinus sylvestris			X			X
436	20"	Black Cherry	Prunus serotina					X	
437	6"	Silver Maple	Acer saccharinum					X	
438	14"	White Pine	Pinus strobus					X	X
439	7"	Box Elder	Acer negundo			X			X
440	15"	Silver Maple	Acer saccharinum	twin				X	X
441	11"	Silver Maple	Acer saccharinum	twin				X	X
442	8"	Silver Maple	Acer saccharinum					X	X
443	12"	Silver Maple	Acer saccharinum					X	X
444	7"	Red Cedar	Juniperus virginiana					X	X
445	12"	Silver Maple	Acer saccharinum					X	X
446	8"	Silver Maple	Acer saccharinum	twin				X	X
447	18"	White Pine	Pinus strobus			X			X
448	9"	Siberian Elm	Ulmus pumila			X			X
449	11"	American Elm	Ulmus americana					X	X
450	8"	Siberian Elm	Ulmus pumila			X			X
451	11"	Silver Maple	Acer saccharinum					X	X
452	16"	White Pine	Pinus strobus					X	X
453	13"	Silver Maple	Acer saccharinum					X	X
454	11"	Silver Maple	Acer saccharinum					X	X
455	6"	Scotch Pine	Pinus sylvestris			X			X
456	14"	White Pine	Pinus strobus					X	X
457	8"	Scotch Pine	Pinus sylvestris			X			X
458	6"	Scotch Pine	Pinus sylvestris			X			X
459	10"	Scotch Pine	Pinus sylvestris			X			X
460	9"	Scotch Pine	Pinus sylvestris			X			X
461	6"	Crab Apple	Malus coronaria	twin				X	X
462	11"	Black Cherry	Prunus serotina	twin				X	X
463	14"	Black Cherry	Prunus serotina	twin				X	X
464	15"	Black Cherry	Prunus serotina	twin				X	X
465	13"	Black Cherry	Prunus serotina					X	X
466	15"	Black Cherry	Prunus serotina	triple				X	X
467	9"	Silver Maple	Acer saccharinum	twin				X	X
468	7"	White Pine	Pinus strobus					X	X
469	11"	American Elm	Ulmus americana					X	X
470	10"	American Elm	Ulmus americana					X	X
471	10"	American Elm	Ulmus americana					X	
472	15"	Silver Maple	Acer saccharinum					X	X
473	9"	White Mulberry	Morus alba			X			X
474	14"	Black Cherry	Prunus serotina	twin				X	X
475	29"	Black Cherry	Prunus serotina			X			X
476	12"	Black Cherry	Prunus serotina					X	X
477	21"	Black Cherry	Prunus serotina		FAIR	X			X
478	9"	Black Cherry	Prunus serotina					X	X
479	6"	American Elm	Ulmus americana	twin					X
480	9"	Sassafras	Sassafras albidum					X	X
481	7"	Sassafras	Sassafras albidum					X	X
482	8"	Sassafras	Sassafras albidum					X	X
483	7"	Sassafras	Sassafras albidum					X	X
484	7"	Silver Maple	Acer saccharinum	twin				X	X

TAG	DBH	COMMON NAME	GENUS/SPECIES	STEMS	HEALTH	INV	LM	PROTECTED	REMOVAL
921	10"	American Elm	Ulmus americana					X	
922	13"	Sweet Cherry	Prunus avuim			X			
923	15"	Black Cherry	Prunus serotina					X	
924	13"	Black Cherry	Prunus serotina					X	
925	13"	American Elm	Ulmus americana					X	
926	9"	Sweet Cherry	Prunus avuim			X			
927	9"	American Elm	Ulmus americana					X	
928	11"	Sweet Cherry	Prunus avuim			X			
929	11"	Sweet Cherry	Prunus avuim			X			
930	12"	Sweet Cherry	Prunus avuim			X			
931	13"	Sweet Cherry	Prunus avuim			X			
932	6"	Sweet Cherry	Prunus avuim			X			
933	7"	Sweet Cherry	Prunus avuim			X			
934	6"	American Elm	Ulmus americana					X	
935	12"	Black Walnut	Juglans nigra					X	
936	13"	American Elm	Ulmus americana					X	
937	15"	Sassafras	Sassafras albidum				X		
938	8"	Sassafras	Sassafras albidum					X	
939	9"	Black Cherry	Prunus serotina					X	
940	8"	Sassafras	Sassafras albidum					X	
941	7"	Sassafras	Sassafras albidum					X	
942	8"	Sassafras	Sassafras albidum					X	
943	8"	Sassafras	Sassafras albidum					X	
944	7"	Sassafras	Sassafras albidum					X	
945	8"	Sassafras	Sassafras albidum					X	
946	11"	Sassafras	Sassafras albidum					X	
947	11"	Black Cherry	Prunus serotina	twin	POOR			X	
948	7"	Black Cherry	Prunus serotina					X	
949	11"	Black Cherry	Prunus serotina					X	
950	8"	Black Cherry	Prunus serotina					X	
951	11"	Black Cherry	Prunus serotina					X	
952	9"	Black Cherry	Prunus serotina					X	
953	7"	Red Oak	Quercus rubra					X	
954	7"	White Oak	Quercus alba					X	
955	29"	White Oak	Quercus alba				X		
956	18"	Black Cherry	Prunus serotina					X	
957	22"	White Oak	Quercus alba				X		
958	9"	Sweet Cherry	Prunus avuim			X			
959	24"	White Oak	Quercus alba				X		
960	8"	Sweet Cherry	Prunus avuim			X			
961	21"	White Oak	Quercus alba				X		
962	9"	Black Cherry	Prunus serotina					X	
963	15"	White Oak	Quercus alba					X	
964	7"	American Elm	Ulmus americana					X	
965	19"	Pignut Hickory	Carya glabra				X		
966	9"	Sassafras	Sassafras albidum					X	
967	17"	White Oak	Quercus alba					X	
968	8"	Black Cherry	Prunus serotina					X	
969	21"	Pignut Hickory	Carya glabra				X		
970	12"	Linden	Tilia americana					X	
971	9"	Black Cherry	Prunus serotina					X	
972	10"	Black Cherry	Prunus serotina					X	
973	7"	Red Maple	Acer rubrum					X	
974	17"	White Oak	Quercus alba					X	
975	13"	White Oak	Quercus alba					X	
976	10"	Black Cherry	Prunus serotina					X	
977	15"	Black Cherry	Prunus serotina					X	
978	6"	Red Maple	Acer rubrum					X	
979	7"	Black Cherry	Prunus serotina					X	
980	21"	Pignut Hickory	Carya glabra		POOR			X	
981	15"	Pignut Hickory	Carya glabra					X	
982	13"	White Oak	Quercus alba					X	
983	10"	Silver Maple	Acer saccharinum					X	
984	15"	White Oak	Quercus alba					X	
985	10"	Black Cherry	Prunus serotina					X	
986	8"	Black Cherry	Prunus serotina					X	
987	9"	Shagbark Hickory	Carya ovata					X	
988	19"	Pignut Hickory	Carya glabra				X		
989	6"	Black Cherry	Prunus serotina					X	
990	7"	Black Cherry	Prunus serotina					X	
991	8"	Red Maple	Acer rubrum					X	
992	7"	American Elm	Ulmus americana					X	
993	8"	Red Maple	Acer rubrum					X	
994	9"	Linden	Tilia americana					X	
995	20"	Linden	Tilia americana				X		
996	8"	Linden	Tilia americana					X	
997	18"	Red Oak	Quercus rubra				X		
998	9"	American Elm	Ulmus americana					X	
999	10"	Black Cherry	Prunus serotina					X	
1000	10"	Black Cherry	Prunus serotina					X	
1401	15"	American Elm	Ulmus americana					X	
1402	11"	Silver Maple	Acer saccharinum					X	
1403	12"	Silver Maple	Acer saccharinum					X	
1404	12"	Silver Maple	Acer saccharinum					X	
1405	10"	Silver Maple	Acer saccharinum					X	
1406	6"	Silver Maple	Acer saccharinum					X	
1407	7"	Linden	Tilia americana					X	
1408	14"	Linden	Tilia americana					X	
1409	7"	Linden	Tilia americana					X	
1410	12"	Linden	Tilia americana					X	
1411	11"	Shagbark Hickory	Carya ovata					X	
1412	6"	Red Maple	Acer rubrum					X	
1413	8"	Red Maple	Acer rubrum					X	
1414	10"	Silver Maple	Acer saccharinum					X	
1415	12"	Black Cherry	Prunus serotina					X	
1416	15"	Shagbark Hickory	Carya ovata					X	
1417	15"	Black Cherry	Prunus serotina					X	
1418	8"	Shagbark Hickory	Carya ovata					X	
1419	14"	Black Cherry	Prunus serotina					X	
1420	7"	Silver Maple	Acer saccharinum					X	
1421	13"	Black Cherry	Prunus serotina					X	
1422	10"	Silver Maple	Acer saccharinum					X	
1423	17"	Silver Maple	Acer saccharinum					X	
1424	16"	Silver Maple	Acer saccharinum					X	
1425	14"	Silver Maple	Acer saccharinum					X	
1426	22"	White Oak	Quercus alba				X		
1427	8"	Silver Maple	Acer saccharinum					X	
1428	14"	Black Cherry	Prunus serotina					X	
1429	17"	Black Cherry	Prunus serotina					X	
1430	14"	Silver Maple	Acer saccharinum					X	
1431	18"	Black Cherry	Prunus serotina	POOR				X	
1432	10"	Black Cherry	Prunus serotina					X	
1433	8"	Silver Maple	Acer saccharinum					X	
1434	18"	Shagbark Hickory	Carya ovata				X		
1435	17"	Shagbark Hickory	Carya ovata					X	
1436	18"	Sweet Cherry	Prunus avuim		X				
1437	18"	Silver Maple	Acer saccharinum	POOR				X	
1438	9"	Sweet Cherry	Prunus avuim		X				
1439	14"	Shagbark Hickory	Carya ovata					X	
1440	18"	Pin Oak	Quercus palustris				X		
1441	8"	Silver Maple	Acer saccharinum					X	
1442	21"	White Oak	Quercus alba				X		
1443	6"	Pin Oak	Quercus palustris					X	
1444	15"	Sweet Cherry	Prunus avuim		X				
1445	9"	Red Maple	Acer rubrum					X	
1446	8"	Red Maple	Acer rubrum					X	
1447	15"	Black Cherry	Prunus serotina					X	
1448	6"	Red Maple	Acer rubrum					X	
1449	12"	Black Cherry	Prunus serotina					X	
1450	7"	Sweet Cherry	Prunus avuim			X			
1451	8"	Sweet Cherry	Prunus avuim			X			
1452	17"	Pignut Hickory	Carya glabra					X	
1453	21"	Pin Oak	Quercus palustris				X		
1454	17"	Silver Maple	Acer saccharinum					X	
1455	18"	Pin Oak	Quercus palustris				X		
1456	19"	Pin Oak	Quercus palustris				X		
1457	6"	Red Maple	Acer rubrum					X	
1458	7"	Red Maple	Acer rubrum					X	
1459	9"	Silver Maple	Acer saccharinum					X	
1460	15"	Sassafras	Sassafras albidum		POOR			X	
1461	9"	Red Maple	Acer rubrum					X	
1462	19"	White Oak	Quercus alba				X		
1463	13"	White Oak	Quercus alba					X	
1464	12"	Silver Maple	Acer saccharinum					X	
1465	12"	Pin Oak	Quercus palustris					X	
1466	18"	Pignut Hickory	Carya glabra				X		
1467	7"	Black Cherry	Prunus serotina					X	
1468	8"	Silver Maple	Acer saccharinum					X	
1469	10"	Black Cherry	Prunus serotina					X	
1470	26"	Pin Oak	Quercus palustris				X		
1471	7"	Pin Oak	Quercus palustris					X	
1472	8"	Pignut Hickory	Carya glabra					X	
1473	8"	Black Cherry	Prunus serotina					X	
1474	7"	Sassafras	Sassafras albidum					X	
1475	8"	Red Maple	Acer rubrum					X	
1476	11"	Black Cherry	Prunus serotina					X	
1477	13"	Pignut Hickory	Carya glabra					X	
1478	6"	Silver Maple	Acer saccharinum					X	
1479	15"	Pin Oak	Quercus palustris					X	
1480	9"	Black Cherry	Prunus serotina					X	
1481	14"	Pignut Hickory	Carya glabra					X	
1482	17"	Pignut Hickory	Carya glabra					X	
1483	14"	Pin Oak	Quercus palustris					X	
1484	6"	Red Maple	Acer rubrum					X	
1485	6"	Red Maple	Acer rubrum					X	
1486	15"	Black Cherry	Prunus serotina					X	
1487	14"	Shagbark Hickory	Carya ovata					X	
1488	6"	Red Maple	Acer rubrum					X	
1489	10"	Black Cherry	Prunus serotina					X	
1490	11"	Silver Maple	Acer saccharinum					X	
1491	13"	Silver Maple	Acer saccharinum					X	
1492	20"	Pignut Hickory	Carya glabra				X		
1493	11"	Black Cherry	Prunus serotina					X	
1494	12"	Silver Maple	Acer saccharinum					X	
1495	11"	Silver Maple	Acer saccharinum					X	
1496	6"	Silver Maple	Acer saccharinum					X	
1497	8"	Pin Oak	Quercus palustris					X	
1498	8"	American Elm	Ulmus americana					X	
1499	7"	Black Cherry	Prunus serotina					X	
1500	20"	Shagbark Hickory	Carya ovata				X		
1501	14"	Black Cherry	Prunus serotina					X	
1502	7"	Sweet Cherry	Prunus avuim				X		
1503	7"	Silver Maple	Acer saccharinum					X	
1504	6"	American Elm	Ulmus americana					X	

TAG	DBH	COMMON NAME	GENUS/SPECIES	STEMS	HEALTH	INV	LM	PROTECTED	REMOVAL
1505	13"	Linden	Tilia americana					X	
1506	14"	Tree-of-heaven	Ailanthus altissima			X			
1507	9"	Silver Maple	Acer saccharinum					X	
1508	15"	White Oak	Quercus alba					X	
1509	19"	Shagbark Hickory	Carya ovata				X		
1510	7"	Shagbark Hickory	Carya ovata					X	
1511	9"	Shagbark Hickory	Carya ovata					X	
1512	6"	Sugar Maple	Acer saccharum					X	
1513	6"	Sassafras	Sassafras albidum					X	
1514	13"	Shagbark Hickory	Carya ovata					X	
1515	14"	Black Cherry	Prunus serotina					X	
1516	10"	Silver Maple	Acer saccharinum					X	
1517	10"	Sassafras	Sassafras albidum					X	
1518	11"	Shagbark Hickory	Carya ovata					X	
1519	21"	Shagbark Hickory	Carya ovata					X	
1520	11"	Shagbark Hickory	Carya ovata					X	
1521	9"	Sassafras	Sassafras albidum					X	
1522	15"	White Oak	Quercus alba					X	
1523	6"	Linden	Tilia americana	twin				X	
1524	7"	Sugar Maple	Acer saccharum					X	
1525	19"	Pignut Hickory	Carya glabra				X		
1526	8"	Black Cherry	Prunus serotina					X	
1527	6"	Sugar Maple	Acer saccharum					X	
1528	19"	American Elm	Ulmus americana			X			
1529	19"	Shagbark Hickory	Carya ovata			X			
1530	12"	Shagbark Hickory	Carya ovata					X	
1531	15"	Shagbark Hickory	Carya ovata					X	
1532	8"	Sugar Maple	Acer saccharum					X	
1533	11"	Black Cherry	Prunus serotina					X	
1534	20"	White Oak	Quercus alba			X			
1535	8"	American Elm	Ulmus americana					X	
1536	19"	White Oak	Quercus alba		POOR	X			
1537	21"	White Oak	Quercus alba		POOR	X			
1538	16"	Black Cherry	Prunus serotina					X	
1539	6"	Shagbark Hickory	Carya ovata					X	
1540	11"	Sassafras	Sassafras albidum					X	
1541	8"	Sassafras	Sassafras albidum					X	
1542	6"	Shagbark Hickory	Carya ovata					X	
1543	8"	Sassafras	Sassafras albidum					X	
1544	19"	White Oak	Quercus alba			X			
1545	16"	Shagbark Hickory	Carya ovata					X	
1546	9"	Silver Maple	Acer saccharinum					X	
1547	7"	Sweet Cherry	Prunus avuim			X			
1548	20"	White Oak	Quercus alba		POOR	X			
1549	24"	Pin Oak	Quercus palustris			X			
1550	8"	Red Maple	Acer rubrum					X	
1551	7"	Sweet Cherry	Prunus avuim			X			
1552	10"	Black Cherry	Prunus serotina					X	
1553	7"	Red Maple	Acer rubrum					X	
1554	7"	Black Cherry	Prunus serotina					X	
1555	7"	Red Maple	Acer rubrum					X	
1556	16"	Pignut Hickory	Carya glabra					X	
1557	17"	Shagbark Hickory	Carya ovata					X	
1558	13"	Shagbark Hickory	Carya ovata					X	
1559	18"	White Oak	Quercus alba				X		
1560	16"	White Oak	Quercus alba					X	
1561	22"	White Oak	Quercus alba				X		
1562	12"	Sassafras	Sassafras albidum					X	
1563	6"	Silver Maple	Acer saccharinum					X	
1564	11"	Silver Maple	Acer saccharinum					X	
1565	7"	Sassafras	Sassafras albidum					X	
1566	11"	Sassafras	Sassafras albidum					X	
1567	13"	Silver Maple	Acer saccharinum					X	
1568	17"	Silver Maple	Acer saccharinum					X	
1569	20"	Silver Maple	Acer saccharinum					X	
1570	11"	Black Cherry	Prunus serotina					X	
1571	10"	Silver Maple	Acer saccharinum					X	
1572	16"	Pin Oak	Quercus palustris					X	
1573	6"	Black Cherry	Prunus serotina					X	
1574	7"	Shagbark Hickory	Carya ovata					X	
1575	8"	Pin Oak	Quercus palustris					X	
1576	6"	Hop-Hornbeam	Ostrya virginiana					X	
1577	13"	Silver Maple	Acer saccharinum					X	
1578	23"	Silver Maple	Acer saccharinum					X	
1579	21"	Sugar Maple	Acer saccharum			X			
1580	6"	Black Cherry	Prunus serotina					X	
1581	18"	Black Cherry	Prunus serotina					X	
1582	12"	Shagbark Hickory	Carya ovata					X	
1583	6"	Silver Maple	Acer saccharinum					X	
1584	12"	Silver Maple	Acer saccharinum					X	
1585	9"	Black Cherry	Prunus serotina					X	
1586	14"	Black Cherry	Prunus serotina					X	
1587	6"	American Elm	Ulmus americana					X	
1588	16"	Silver Maple	Acer saccharinum					X	
1589	12"	Sassafras	Sassafras albidum					X	
1590	18"	Black Cherry	Prunus serotina					X	
1591	17"	Black Cherry	Prunus serotina					X	
1592	8"	American Elm	Ulmus americana					X	
1593	10"	Sugar Maple	Acer saccharum					X	
1594	9"	Black Cherry	Prunus serotina					X	
1595	9"	Pin Oak	Quercus palustris					X	
1596	8"	Sugar Maple	Acer saccharum					X	
1597	21"	White Oak	Quercus alba			X			
1598	10"	Sugar Maple	Acer saccharum					X	
1599	9"	Black Cherry	Prunus serotina					X	
1600	17"	White Oak	Quercus alba					X	
1601	7"	Sugar Maple	Acer saccharum					X	
1602	16"	Black Cherry	Prunus serotina					X	
1603	6"	Sugar Maple	Acer saccharum					X	
1604	10"	Sugar Maple	Acer saccharum					X	
1605	7"	Sugar Maple	Acer saccharum					X	
1606	9"	Black Cherry	Prunus serotina					X	
1607	16"	Pin Oak	Quercus palustris					X	
1608	21"	White Oak	Quercus alba			X			
1609	14"	Shagbark Hickory	Carya ovata					X	
1610	7"	Pin Oak	Quercus palustris					X	
1611	10"	American Elm	Ulmus americana					X	
1612	23"	White Oak	Quercus alba			X			
1613	11"	Black Cherry	Prunus serotina					X	
1614	21"	White Oak	Quercus alba			X			
1615	9"	Pignut Hickory	Carya glabra					X	
1616	12"	Black Cherry	Prunus serotina					X	
1617	13"	Sugar Maple	Acer saccharum					X	
1618	7"	Sugar Maple	Acer saccharum					X	
1619	8"	Sugar Maple	Acer saccharum					X	
1620	13"	Silver Maple	Acer saccharinum					X	
1621	15"	Sugar Maple	Acer saccharum					X	
1622	18"	White Oak	Quercus alba			X			
1623	8"	American Elm	Ulmus americana					X	
1624	18"	White Oak	Quercus alba			X			
1625	11"	Black Cherry	Prunus serotina					X	
1626	10"	Black Cherry	Prunus serotina					X	
1627	9"	Shagbark Hickory	Carya ovata					X	
1628	7"	Sugar Maple	Acer saccharum					X	
1629	13"	Black Cherry	Prunus serotina					X	
1630	10"	Pin Oak	Quercus palustris					X	
1631	13"	Black Cherry	Prunus serotina					X	
1632	12"	Black Cherry	Prunus serotina					X	
1633	8"	American Elm	Ulmus americana					X	
1634	22"	Pin Oak	Quercus palustris		POOR	X			
1635	7"	Pin Oak	Quercus palustris			X			
1636	18"	White Oak	Quercus alba			X			
1637	8"	Sugar Maple	Acer saccharum	twin				X	
1638	24"	Linden	Tilia americana			X			
1639	9"	Shagbark Hickory	Carya ovata					X	
1640	14"	Shagbark Hickory	Carya ovata					X	
1641	6"	American Elm	Ulmus americana					X	
1642	6"	American Elm	Ulmus americana					X	
1643	13"	Shagbark Hickory	Carya ovata					X	
1644	11"	Black Cherry	Prunus serotina					X	
1645	17"	American Elm	Ulmus americana					X	
1646	12"	Pin Oak	Quercus palustris					X	
1647	11"	Sassafras	Sassafras albidum					X	
1648	6"	Sassafras	Sassafras albidum					X	
1649	25"	Linden	Tilia americana			X			
1650	6"	Black Cherry	Prunus serotina					X	
1651	11"	Pin Oak	Quercus palustris					X	
1652	16"	Pin Oak	Quercus palustris					X	
1653	15"	Linden	Tilia americana					X	
1654	13"	Linden	Tilia americana					X	
1655	11"	Linden	Tilia americana					X	
1656	9"	Black Cherry	Prunus serotina					X	
1657	6"	American Elm	Ulmus americana					X	
1658	12"	American Elm	Ulmus americana					X	
1659	9"	American Elm	Ulmus americana					X	
1660	13"	Sassafras	Sassafras albidum					X	
1661	23"	Pignut Hickory	Carya glabra					X	
1662	9"	Sassafras	Sassafras albidum					X	
1663	11"	Sassafras	Sassafras albidum					X	
1664	9"	Sassafras	Sassafras albidum					X	
1665	10"	Sassafras	Sassafras albidum					X	
1666	9"	Sassafras	Sassafras albidum					X	
1667	18"	Shagbark Hickory	Carya ovata			X			
1668	9"	Pin Oak	Quercus palustris					X	
1669	14"	Black Cherry	Prunus serotina					X	
1670	9"	Silver Maple	Acer saccharinum					X	
1671	8"	Sassafras	Sassafras albidum					X	
1672	10"	Sassafras	Sassafras albidum					X	
1673	6"	Sassafras	Sassafras albidum					X	
1674	12"	Pin Oak	Quercus alba					X	
1675	14"	White Oak	Quercus alba					X	
1676	19"	White Oak	Quercus alba					X	
1677	6"	Sassafras	Sassafras albidum					X	
1678	9"	Sassafras	Sassafras albidum					X	
1679	8"	Sassafras	Sassafras albidum					X	
1680	12"	Sassafras	Sassafras albidum			X			
1681	7"	American Elm	Ulmus americana					X	
1682	10"	White Oak	Quercus alba					X	
1683	9"	Black Cherry	Prunus serotina					X	
1684	14"	Black Cherry	Prunus serotina					X	
1685	15"	White Oak	Quercus alba					X	
1686	9"	Red Maple	Acer rubrum					X	
1687	16"	White Oak	Quercus alba					X	
1688	11"	Pignut Hickory	Carya glabra					X	

TAG	DBH	COMMON NAME	GENUS/SPECIES	STEMS	HEALTH	INV	LM	PROTECTED	REMOVAL
1689	9"	Black Cherry	Prunus serotina					X	
1690	20"	Shagbark Hickory	Carya ovata			X			
1691	14"	White Oak	Quercus alba					X	
1692	15"	White Oak	Quercus alba					X	
1693	12"	Sassafras	Sassafras albidum					X	
1694	16"	Shagbark Hickory	Carya ovata					X	
1695	8"	Black Cherry	Prunus serotina					X	
1696	8"	Silver Maple	Acer saccharinum					X	
1697	8"	Sassafras	Sassafras albidum					X	
1698	8"	Sassafras	Sassafras albidum					X	
1699	19"	Pin Oak	Quercus palustris					X	
1700	8"	Black Cherry	Prunus serotina					X	
1701	9"	Pin Oak	Quercus palustris					X	
1702	8"	Sassafras	Sassafras albidum					X	
1703	7"	Sassafras	Sassafras albidum					X	
1704	13"	Sassafras	Sassafras albidum					X	
1705	16"	Pin Oak	Quercus palustris					X	
1706	14"	White Oak	Quercus alba					X	
1707	8"	Black Cherry	Prunus serotina					X	
1708	10"	Black Cherry	Prunus serotina					X	
1709	16"	Black Cherry	Prunus serotina					X	
1710	9"	American Elm	Ulmus americana					X	
1711	12"	Pin Oak	Quercus palustris					X	
1712	7"	Pin Oak	Quercus palustris					X	
1713	7"	Pin Oak	Quercus palustris	twin				X	
1714	7"	Sassafras	Sassafras albidum					X	
1715	9"	Sassafras	Sassafras albidum					X	
1716	12"	White Oak	Quercus alba					X	
1717	16"	Black Cherry	Prunus serotina					X	
1718	8"	Black Cherry	Prunus serotina					X	
1719	13"	Pignut Hickory	Carya glabra					X	
1720	13"	White Oak	Quercus alba					X	
1721	15"	Pignut Hickory	Carya glabra					X	
1722	14"	Sassafras	Sassafras albidum					X	
1723	11"	Black Cherry	Prunus serotina					X	
1724	10"	White Oak	Quercus alba					X	
1725	6"	American Elm	Ulmus americana					X	
1726	10"	Sassafras	Sassafras albidum					X	
1727	9"	Sassafras	Sassafras albidum					X	
1728	13"	Black Cherry	Prunus serotina					X	
1729	11"	Black Cherry	Prunus serotina					X	
1730	21"	Pignut Hickory	Carya glabra			X			
1731	7"	American Elm	Ulmus americana					X	
1732	15"	Black Cherry	Prunus serotina					X	
1733	9"	Black Cherry	Prunus serotina					X	
1734	17"	White Oak	Quercus alba					X	
1735	6"	Red Maple	Acer rubrum					X	
1736	6"	Black Cherry	Prunus serotina					X	
1737	10"	White Oak	Quercus alba					X	
1738	10"	White Oak	Quercus alba					X	
1739	7"	Red Maple	Acer rubrum					X	
1740	18"	White Oak	Quercus alba			X			
1741	11"	Sassafras	Sassafras albidum					X	
1742	12"	Black Cherry	Prunus serotina					X	
1743	9"	Black Cherry	Prunus serotina					X	
1744	16"	Black Cherry	Prunus serotina					X	
1745	10"	Black Cherry	Prunus serotina					X	
1746	13"	Black Cherry	Prunus serotina					X	
1747	13"	Pignut Hickory	Carya glabra					X	
1748	6"	American Elm	Ulmus americana					X	
1749	19"	Pignut Hickory	Carya glabra			X			
1750	17"	White Oak	Quercus alba					X	
1751	20"	Pignut Hickory	Carya glabra			X			
1752	6"	Pin Oak	Quercus palustris					X	
1753	15"	Black Cherry	Prunus serotina					X	
1754	12"	Black Cherry	Prunus serotina					X	
1755	8"	Black Cherry	Prunus serotina					X	
1756	11"	Black Cherry	Quercus palustris					X	
1757	13"	Shagbark Hickory	Carya ovata					X	
1758	10"	Black Cherry	Prunus serotina					X	
1759	7"	American Elm	Ulmus americana					X	
1760	21"	Pin Oak	Quercus palustris		POOR			X	
1761	16"	Sassafras	Sassafras albidum			X			
1762	8"	Black Cherry	Prunus serotina					X	
1763	8"	Sweet Cherry	Prunus avuim			X			
1764	10"	Black Cherry	Prunus serotina					X	
1765	8"	Black Cherry	Prunus serotina					X	
1766	16"	Black Cherry	Prunus serotina					X	
1767	11"	Silver Maple	Acer saccharinum					X	
1768	8"	Silver Maple	Acer saccharinum					X	
1769	19"	Pin Oak	Quercus palustris			X			
1770	8"	Pignut Hickory	Carya glabra					X	
1771	16"	White Oak	Quercus alba					X	
1772	8"	Pignut Hickory	Carya glabra					X	
1773	11"	Pin Oak	Quercus palustris					X	
1774	23"	Pin Oak	Quercus palustris			X			
1775	21"	Pin Oak	Quercus palustris		POOR	X			
1776	10"	Pignut Hickory	Carya glabra					X	
1777	10"	Pignut Hickory	Carya glabra					X	
1778	18"	Sassafras	Sassafras albidum			X			
1779	20"	Sassafras	Sassafras albidum			X			
1780	18"	Pignut Hickory	Carya glabra			X			
1781	11"	Sassafras	Sassafras albidum					X	
1782	19"	Pignut Hickory	Carya glabra					X	
1783	8"	Sassafras	Sassafras albidum					X	

TAG	DBH	COMMON NAME	GENUS/SPECIES	STEMS	HEALTH	INV	LM	PROTECTED	REMOVAL
2011	15"	Silver Maple	Acer saccharinum					X	
2012	17"	Silver Maple	Acer saccharinum					X	
2013	14"	Silver Maple	Acer saccharinum					X	
2014	8"	Silver Maple	Acer saccharinum					X	
2015	11"	Black Cherry	Prunus serotina					X	
2016	17"	Black Cherry	Prunus serotina					X	
2017	11"	Silver Maple	Acer saccharinum					X	
2018	12"	Silver Maple	Acer saccharinum					X	
2019	9"	Silver Maple	Acer saccharinum	twin				X	
2020	37"	Scotch Pine	Pinus sylvestris				X		
2021	9"	Silver Maple	Acer saccharinum					X	
2022	8"	Silver Maple	Acer saccharinum	twin				X	
2023	10"	Silver Maple	Acer saccharinum	twin				X	
2024	9"	Silver Maple	Acer saccharinum					X	
2025	15"	Black Cherry	Prunus serotina					X

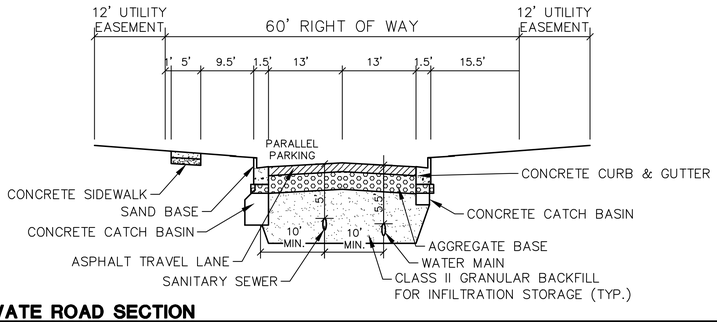

PRIVATE ROAD SECTION

NOT TO SCALE

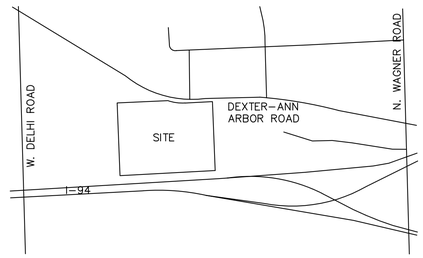

VICINITY MAP

NOT TO SCALE

SCALE: 1" = 100'

0 100 200 300

811 Know what's below. Call before you dig.

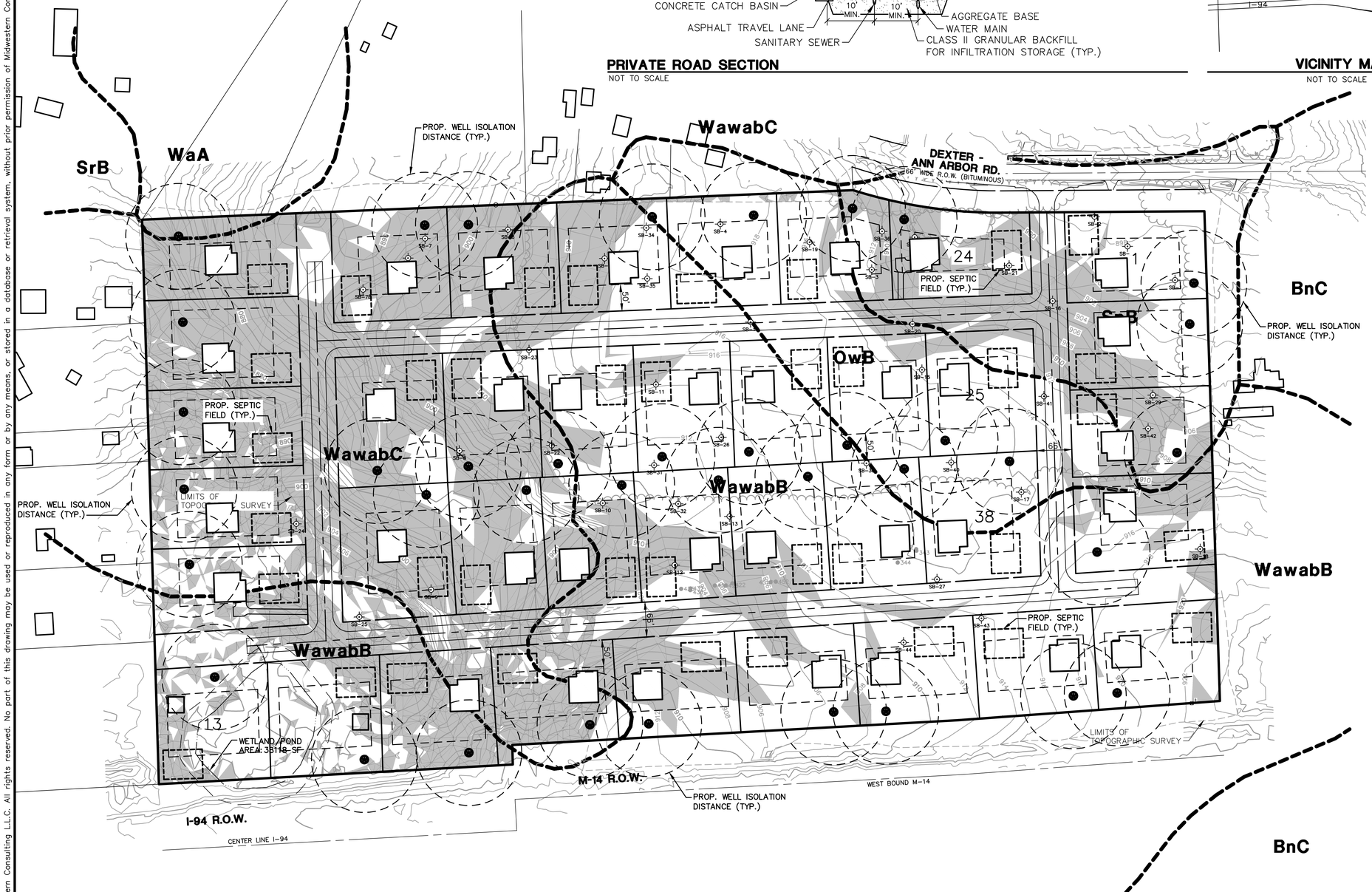

LEGEND

- PROP. STANDARD SEPTIC FIELD
- AREA SUITABLE FOR ENGINEERED SEPTIC FIELD
- PROP. WELL

SITE DATA CHART

	Proposed Underlying per Master Plan - R-1		Parallel Plan	
Zoning				
Land Use	Single Family Residential (Detached)		Single Family Residential (Detached)	
Site Area	2,033,677	sf gross/net	2,033,677	sf gross/net
	46.69	Acres Gross	46.69	Acres Gross
Dwelling Units				
Number of Units	46	Homes	38	Homes
Gross Lot Density	1.00	DU/Acre max.	0.8	DU/acre
Lots				
Min. Lot Area	1	Acres	1	acre min.
Min. Lot Width	150	ft min.	150	ft
Set	Front	50	ft	50	ft
	Side	20	ft	20	ft
	Corner/Side	50	ft	50	ft
	Rear	50	ft	50	ft
Lot Coverage	20%	Maximum	Not determined	Max.
Max. Floor Area Coverage	20%	Maximum	Not determined	Max.

- EXISTING SITE ZONING: R-C
- MASTER PLAN FUTURE LAND USE: LOW DENSITY RESIDENTIAL 1 DU PER ACRE TO 1 DU PER 2.5 ACRES
- ASSUMES REZONING TO PUD PER MASTER PLAN DENSITY (1 DU/ACRE)
- ASSUMES UNDERGROUND STORMWATER MANAGEMENT WITHIN ROAD ROW
- ASSUMES PERMITTED DISTURBANCE TO NATURAL FEATURES SETBACK FOR OPEN WATER POND
- ASSUMES PERMITTED AND MITIGATED IMPACTS TO REGULATED TREES
- POTENTIAL PUD DENSITIES
  - 38 LOTS WITH 15% DENSITY BONUS = 43 LOTS
  - 38 LOTS WITH 25% DENSITY BONUS = 47 LOTS

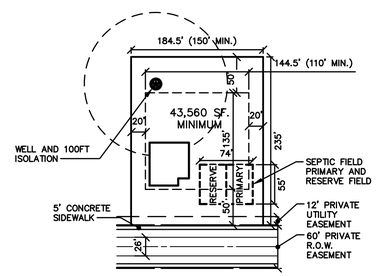

TYPICAL LOT DETAIL

NOT TO SCALE

STORM WATER CALCULATION
STORM WATER STORAGE UNDER ROADWAY
3,000 LF ROADWAY
152,000 CFT OF STORM WATER TO STORE
=6.5 FEET OF STORAGE UNDER THE ROAD

The underground utilities shown have been located from field survey information and existing records. The surveyor makes no guarantees that the underground utilities shown comprise all such utilities in the area, either in-service or abandoned. The surveyor further does not warrant that the underground utilities shown are in the exact location indicated. Although the surveyor does certify that they are located as accurately as possible from the information available.

M:\Civil3d_Pro\17310\Prelim PUD\17310PP1.dwg, 11/8/2021 10:10 AM, Quinn C. Foster, PARALLEL PLAN - R1, MCLLC PDF.pc3
Copyright © 2021 Midwestern Consulting, L.L.C. All rights reserved. No part of this drawing may be used or reproduced in any form or by any means, or stored in a database or retrieval system, without prior permission of Midwestern Consulting, L.L.C.

MIDWESTERN CONSULTING
3815 Plaza Drive, Ann Arbor, Michigan 48108
(734) 995-0200 • www.midwesternconsulting.com
Land Development • Land Survey • Institutional • Municipal
Wireless Communications • Transportation • Landfill Services

CLIENT
NORFOLK DEVELOPMENT CORPORATION
8178 JACKSON RD., SUITE D
ANN ARBOR, MI 48108
JIM HAEUSSLER
(734) 260-9678

3991 DEXTER-ANN ARBOR RD

PRELIMINARY PLANNED UNIT DEVELOPMENT
PARALLEL PLAN - R1

20

DATE: 8/27/21
SHEET: 20 OF 20
CADD: RML
ENG: RML2
PM: TJC
TECH:
17310PP1

JOB No. 17310

REVISIONS:
PER MUNICIPAL REVIEW — REV. DATE 11/05/21

Township of Scio

827 N. Zeeb Road · Ann Arbor, MI 48103
734/369-9400 · 734/665-0825 Fax
www.ScioTownship.org

Applications will not be processed until deemed complete. Incomplete applications will be destroyed after 90 days.

SITE PLAN 21019

☐ ADMINISTRATIVE SITE PLAN
☒ FULL SITE PLAN

DATE 10-25-21

PROPERTY ID NO. H-08-25-400-029

ZONING DISTRICT C-4

APPLICANT: Dealership Acquisitions (AGENT/DEVELOPER)
17408 Edgewater Dr (STREET, NUMBER)
Lakewood OH 44107 (CITY, STATE, ZIP)
(216) 316-0677 (PHONE)
(216) 228-4887 (FAX)
MARK@DealershipAcquisitions.com (EMAIL)

OWNER: Connor Properties (NAME)
17408 Edgewater Dr (STREET, NUMBER)
Lakewood OH 44107 (CITY, STATE, ZIP)
(216) 316-0677 (PHONE)
(216) 228-4887 (FAX)
MARK@DealershipAcquisitions.com (EMAIL)

PROPOSED NAME OF DEVELOPMENT: New car Sales & Service

ADDRESS OF PROPERTY (OR POPULAR ADDRESS): 3530 Jackson Road

LEGAL DESCRIPTION: ☐ ATTACHED ☑ ON SITE PLAN

LOT SIZE: 4.78 (AREA) DEED RESTRICTIONS: ☑ NONE ☐ ATTACHED

DESCRIPTION OF PROPOSED USE: Repurposing of the existing ±35,500 sf building into a new car dealership & service center with a reconfiguartion of the existing parking lot.

STORIES: ☑ EXISTING 1 Story ☐ NEW

SQ. FT.: ☑ ADDITION ±100 sf ☐ NEW

SQ. FT. BY USE:
☐ COMMERCIAL
☐ OFFICE
☐ WAREHOUSE
☐ MANUFACTURING
☐ OTHER

SANITARY FACILITIES: ☑ SEWER ☐ SEPTIC

WATER: ☑ MUNICIPAL ☐ PRIVATE WELL

I AGREE TO GIVE PERMISSION FOR OFFICIALS OF SCIO TOWNSHIP TO ENTER THE PROPERTY SUBJECT TO THIS APPLICATION FOR PURPOSES OF INSPECTION.

☐ *Property owner authorization letter attached.*

SIGNATURE OF APPLICANT — DATE 10-25-21

SIGNATURE OF OWNER — DATE

MARK SIMS Principal
PRINT NAME

MARK SIMS principal
PRINT NAME/TITLE

(H) 20211028 #109 $500.00 (C) **FOR OFFICE USE ONLY** FEES $2460.00 (CK)

THIS APPLICATION HAS BEEN REVIEWED FOR COMPLIANCE WITH THE TOWNSHIP ZONING ORDINANCE, AND FOR ACCURACY OF PROPERTY DESCRIPTION:

ORDINANCE ADMINISTRATOR — DATE

PLANNING COMMISSION ACTION:
☐ APPROVED, DATE
☐ DENIED, DATE

TOWNSHIP BOARD:
☐ APPROVED, DATE
☐ DENIED, DATE

APPLICATION RECEIVED DATE:
FEE RECEIVED: CASH CHECK
SP DATE
SW
WA

EXPIRATION DATE:

Carlisle | Wortman
ASSOCIATES, INC.
117 NORTH FIRST STREET SUITE 70 ANN ARBOR, MI 48104 734.662.2200 734.662.1935 FAX

Date: November 18, 2021
Revised: December 7, 2021

Site Plan Review
For
Scio Township, Michigan

GENERAL INFORMATION

File No.:	SP 21019
Applicant:	Dealership Acquisitions
Project Name:	Dealership Service Center (former Belmark Lanes)
Plan Date:	October 25, 2021
Revised Date:	November 24, 2021
Location:	3530 Jackson Road
Zoning:	C-4, Composite Commercial / JROD, Jackson Road Overlay District
Action Requested:	Site Plan Review
Required Information:	Any deficiencies are noted on the body of this review.

PROJECT AND SITE DESCRIPTION

The applicant is proposing modifications of the existing one-story bowling alley structure, parking lot and drives, dumpster enclosure, landscaping and lighting for a new auto dealership. The site contains 4.78 acres and is located at 3530 Jackson Road. The subject site is zoned C-4, Composite Commercial and is located in the Jackson Road Overlay district (JROD). Auto dealerships are listed as a permitted use in the C-4 zoning district.

Location of Subject Property:



Size of Subject Property:
The parcel is approximately 4.78 acres in area

Current and Proposed Uses of Subject Parcel:
The site is currently a bowling alley. The proposed uses include an auto dealership with service center.

Items to be Addressed: *None.*

AREA, WIDTH, HEIGHT, SETBACKS

The dimensional requirements of the C-4 / JROD districts are noted in the table on the following page:

	Required	Provided	Compliance
Lot Area	1 acre	4.78 acres	Compliant
Lot Width	150 feet	273.62 feet	Compliant
Building Setbacks			
Front (Jackson Road)	50 feet / 30 feet front yard greenbelt line	76.3 feet	Compliant
Side (east/west)	20 feet (C/S 50 feet)	80.4 feet/33.3 feet	Compliant
Rear (north)	50 feet	402.4 feet	Compliant
Parking Setbacks			
Front (Jackson Road)	30 feet / 15 feet w/decorative wall	33.5 feet	Compliant
Side (east/west)	10 feet	10 feet / 43.6feet	Compliant
Rear (north)	10 feet	13.4 feet	Compliant
Maximum Lot Coverage	15% (20%)	17.9%	BMPs to be evaluated by OHM
Maximum Floor Area	30% (40%)	17.9%	Complies
Building Height	2 stories / 30 feet	1 story	Complies

Best management practices associated with the increased maximum lot coverage will be evaluated by the Township Engineer.

Items to be Addressed: *Township Engineer to evaluate BMPs for increased maximum lot coverage.*

NATURAL RESOURCES

The site has been previously developed and is void of any natural features.

Topography: The subject site slope is fairly level sloping slightly downward from south to north with the site's low point located centrally on the northern portion of the parcel (existing catch basin).

Wetlands: No wetlands are demonstrated on the subject site.

Woodlands: No woodlands are located on the site.

Soils: We note from previous reviews the predominant soil series is fox (FoB) with the exception of a small portion of the northwest corner which is characterized by Miami soils. We would not consider soils to be an impediment to the development of this site.

Items to be addressed: *None.*

TRAFFIC IMPACT

A traffic study may be required by the Washtenaw County Road Commission due to the change of use from a bowling alley to an auto dealership/service center.

Items to be Addressed: *Washtenaw County Road Commission and Township Engineer review of traffic impacts.*

ESSENTIAL FACILITIES AND SERVICES

The site is to be served by municipal sewer and water. It appears that the existing connections will be utilized. We defer to the Township Engineer for specific comments related to the proposed utility systems.

Items to be Addressed: *Township Engineer review of utility plan and storm water management.*

BUILDING LOCATION AND SITE ARRANGEMENT

Building location and site arrangement will remain the same, with the building located at the front of the property nearest Jackson Road with the majority of parking located in the rear.

Items to be Addressed: *None.*

PARKING, LOADING

Section 36-278(h) requires auto sales uses to provide *1 space per each 200 square feet of showroom floor area pus three (3) per service stall.*

	Required	Total Parking Provided
Auto Sales (1 per 200 SF of showroom floor area) – 2,900 SF/200 = 15	75	12 customer 21 employee 16 electric vehicle 196 vehicle storage **245 spaces**
Service Stalls (3 per service stall) – 20 stalls*3= 60		
Barrier Free – based on customer/employee spaces	2	2

The site provides for 33 parking spaces for employees and customers and 212 spaces for vehicle storage an EV charging. All parking spaces and drive aisles are dimensioned in accordance with Section 36-278(i).

Loading: A loading area is demonstrated along the west property line.

Bicycle Parking: Section 36-278(j) requires *one (1) bicycle parking space must be provided for every 20 automobile parking spaces, with a minimum of two (2) required for all sites.* Two (2) bicycle parking spaces are required; four (4) bicycle parking spaces have been provided.

Items to be Addressed: *None.*

SITE ACCESS AND CIRCULATION

The site will be accessed via two (2) two-way existing drives to the east and west of the existing building. One-way maneuvering can be accommodated for passenger vehicles in front of the building. Additional demarcations and signage should be considered to clearly indicate the one-way movement in front of the building.

Truck turning radii for emergency, delivery and garbage trucks has been provided on Sheet C-206.

Items to be Addressed: *None.*

LANDSCAPING

A separate landscape plan has been provided as part of the site plan submittal. The landscape plan has been sealed by a registered landscape architect.

Greenbelt (Jackson Road): *A 30-foot greenbelt shall contain the equivalent of one (1) tree and six (6) shrubs for every thirty (30) feet of frontage* nine (9) trees and 54 shrubs are required and have been provided.

Interior Parking Lot Landscaping: *One (1) canopy tree is required for every eight (8) parking spaces; landscaped islands within a designated parking area shall be a minimum of 150 square feet in area and nine (9) feet in width* – 245 parking spaces are provided requiring 31 canopy trees that have been provided.

Perimeter Parking Lot Landscaping: *Parking lots that are visible from a public road shall be screened from view with a landscaped berm varied in height from between two to three feet along the perimeter of those sides which are visible. The berm shall be planted with a minimum of one (1) deciduous or evergreen tree and six shrubs for every 30 linear feet. The Planning Commission at its discretion, may approve alternative landscape plantings, such as a solid hedge, or a solid wall in lieu of a landscape berm.* The applicant provides that 230 linear feet of perimeter parking lot area is visible from Jackson Road requiring eight (8) trees and 46 shrubs. Seven (7) trees and an existing tree are provided. We note while the plant schedule lists a quantity of 46 shrubs to meet the perimeter parking requirement, only 36 are provided on the plan. (The quantity of PP-St is incorrect; only 36 are shown on the site plan.)

Foundation Landscaping: *Foundation plantings shall be provided along the front or sides of any buildings which face a public road and/or is adjacent to a parking lot or other area which provides access to the building by the general public. Foundation planting areas shall contain one (1) ornamental tree and six (6) shrubs per 30 lineal feet of applicable building frontage. Individual planting areas shall be a minimum of eight (8) feet in width.* The applicant has noted 381 linear feet of the building are visible to the public and require foundation plantings. Seven (7) ornamental trees are proposed and six (6) existing trees will remain to meet this requirement. Additionally, 76 shrubs are provided as required.

General Site Landscaping: *In addition to any required screening; front greenbelt foundation landscaping and/or parking lot landscaping required 25% of the site area shall be landscaped.* Twenty-one percent (21%) of the site is demonstrated as general landscape area. This is an increase from the current built site which provides for 17% general site landscaping. This is an existing non-conformity.

Refuse Containers: A single dumpster enclosure is shown at the northwest corner of the building. Section 36-345(b)(9) requires all refuse containers to meet applicable setback requirements and be located behind the front face of the building away from public view. Further, the layout and dimensions of the dumpster enclosure are provided on Sheet C-500.

Transformer Screening: A supercharger electric cabinet is proposed in a parking lot island nearest the building in the rear parking lot. A tree is located adjacent to the cabinet and additional shrubbery has been added for additional screening.

Equipment Screening: All existing and proposed roof-mounted equipment will need to be screened. The applicant states in their response letter that existing roof-top equipment is screened by the proposed parapet wall at the front façade. They have provided location of roof-top equipment placement as part of the architectural plan sheets and provide an eye-level rendering of the view from Jackson Road Sheet A5.02.

Items to be Addressed: *Correct perimeter parking landscape calculation / provide 10 more shrubs to meet requirement.*

LIGHTING

A lighting plan is provided on Sheet 1 of 1. Illumination levels along all property lines are 0.3 foot-candles or less as required. Twenty-six (26) pole-mounted lights are proposed and eight (8) building-mounted fixtures.

The light pole height is proposed at 18 feet which meets the requirements for parking lots having over 100 spaces.

Items to be Addressed: *None.*

SIGNS

The location of a new monument sign is proposed along Jackson Road meeting required setbacks. Detail of the sign has not been provided. Wall signage is also proposed along the south and east building elevations. Signs will be reviewed under separate permit review.

Items to be Addressed: *Review of signs will be conducted under a future sign permit review.*

FLOOR PLANS and ELEVATIONS

A floor plans and building elevations have been included in this site plan submittal package. Exterior building materials the existing finishes on all elevations with the exception of the front (south) and a portion of the side (east) façade that is proposed to be recovered with EIFS.

Modifications to the building façade are required to meet JROD building design guidelines outlined in Section 36-76(f) which includes the following:

- Facades greater than 100 feet in length, shall incorporate projections or recesses extending at least 20% of the length of the façade. No uninterrupted length of any façade shall exceed 100 horizontal feet.
- Ground floor facades that face public streets shall have arcades, display windows, entry areas, awnings, or other such features along no less than 50% of their horizontal length. Real windows allowing daylight in the building are encouraged.
- Flat roofs shall have parapets concealing equipment from public view.
- Predominant building materials shall be high quality materials, including, but not limited to brick, stone, architectural steel and glass, and integrally tinted/textured concrete masonry units.
- All façade colors and systems shall be reviewed and approved by the Planning Commission.
- Each principal building on the site shall have clearly defined, highly visible entrances featuring no less than three of the following: canopies or porticos; overhangs, recesses/projection, arcades, raised corniced parapets over the door, peaked roof forms, arches, outdoor patios, display windows, architectural details such as tile work and moldings which are integrated into the building structure and design, integral planters or wing walls that incorporate landscape areas and/or places for sitting and special pavement.

The use of EIFS has not been considered a high-quality material and has been limited to trim in JROD design applications. The applicant's response letter states:

> *In order to maintain the structural integrity of the existing pre-engineered building, an EIFS clad parapet wall attachment is proposed as a viable option to not add additional structural loads to the front façade. Materials such as brick, stone, steel, and concrete masonry would require extensive re-work to the façade and will not be structurally feasible without adding extensive structural support which would be detrimental in our efforts to comply with other listed JROD Design standards and achieve the proposed design intent.*

Further, the architect provided additional information regarding how the JROD standards have been met as listed on Sheet A0.00 including:

- Calculations for recesses/projections for facades greater than 100 feet demonstrating compliance with the 20% requirement.
- Calculations for area of display windows demonstrating compliance with the 50% requirement.
- Planning Commission will need to review proposed building materials including the use of EIFS.
- With regard to the building entrance, we note the use of a canopy, projection/recess, and display windows. A third architectural feature will need to be provided in order to meet the standard.

Items to be Addressed: *Replace use of EIFS with a high-quality building material.*

RECOMMENDATIONS

The following items should be addressed prior to placement on a Planning Commission agenda for consideration:

1. Township Engineer to evaluate BMPs for increased maximum lot coverage.
2. Washtenaw County Road Commission and Township Engineer review of traffic impacts.
3. Township Engineer review of utility plan and storm water management.
4. Correct perimeter parking landscape calculation / provide 10 more shrubs to meet requirement.
5. Review of signs will be conducted under a future sign permit review.
6. Replace use of EIFS with a high-quality building material.

CARLISLE/WORTMAN ASSOC., INC.
Douglas J. Lewan, AICP
Executive Vice President

CARLISLE/WORTMAN ASSOC., INC.
Laura K. Kreps, AICP
Senior Associate

#124-2154

Cc: Dealership Acquisitions via mark@dealerhsipacquisitions.com

December 6, 2021

Scio Township, Michigan
827 N. Zeeb Road
Ann Arbor, MI 48103

GENERAL INFORMATION

Application No:	SP#21019		
Applicant:	Mark Sims, Dealership Acquisition		
Project Name:	Automotive Dealership		
Plan Date:	October 25, 2021	Revision Date:	November 24, 2021
Location:	3530 Jackson Road		
Parcel ID:	H-08-23-400-029		
Sewer Capacity:	Current REUs – 10.5	Required REUs – 5 (No additional REUs anticipated)	
Action Requested:	Site Plan Approval		

We have completed site plan review of the plans dated October 25, 2021 with a latest revision date of November 24, 2021 and stamped received by OHM Advisors on December 1, 2021.

A brief description of the project has been provided below, followed by our comments and a list of anticipated required permits and approvals.

At this time, the plans are recommended for approval and placement on the next available Scio Township Planning Commission meeting agenda, contingent on the following comments being addressed prior to the next plan submittal. Preliminary detailed engineering comments have been provided to the applicant as a courtesy and shall be addressed prior to submitting detailed engineering plans for review.

PROJECT AND SITE DESCRIPTION

The existing site comprises of a 35,450 square foot building and a large, paved parking area. The proposed project consists of fully remodeling the existing building into an automotive sales, service, and delivery center. The facility will service electric vehicles. The facility intends to install new electric charging equipment, service lifts, millwork painting, and a show room for vehicles. There are no changes proposed to the existing building footprint at this time.

The proposed project intends to install new signage along Jackson Road as well as on the existing building. The existing road signage will be removed.

The applicant intends to install landscape islands separating the parking aisles. The proposed project intends to resurface the parking area by milling and replacing the existing asphalt. The proposed site will be serviced by the existing 6-inch sanitary sewer lateral and 8-inch water service to Jackson Road. The site's stormwater will be mostly unchanged except for the installation of a stormwater oil separator. In general, the stormwater flows to the north to an existing drainage culvert parallel to the I-94 expressway.

OHM Advisors
34000 PLYMOUTH ROAD
LIVONIA, MICHIGAN 48150
T 734.522.6711
F 734.522.6427
OHM-Advisors.com

SITE PLAN COMMENTS

PARKING LOT LAYOUT & PAVING/GRADING

1. The applicant shall note that the fire truck vehicle turning path appears to conflict with the proposed sidewalk. The applicant shall review and revise accordingly. We defer to the Scio Township Fire Department on emergency access and hydrant coverage approval.

PRELIMINARY DETAILED ENGINEERING COMMENTS

These comments should be addressed by the applicant in the detailed engineering drawing submittal but do not affect the recommendation for approval to the Scio Township Planning Commission. It should be noted that this is not an all-inclusive list, and more comments may be generated as new information is presented.

1. The applicant shall provide spot elevations at all four (4) corners of all barrier free parking spaces and access aisles, as well as along both sides of all proposed sidewalk at 50-foot intervals. The applicant shall note that the cross-slope shall not exceed 2% per ADA Standards. In addition, a detailed grading plan for the entire site, including both existing and proposed contours, shall be provided.

2. An Engineer's Certificate of Outlet, signed and sealed by a licensed professional engineer in the State of Michigan, shall be provided on the plans.

3. The applicant shall provide utility pipe profiles, including pipe diameter, material, length, slope, and hydraulic grade line (where applicable) for all proposed utilities (water, sanitary, storm) on the plans.

4. The applicant shall provide an engineer's estimate of probable cost for the project with the detailed engineering submittal.

REQUIRED PERMITS & APPROVALS

The following outside agency reviews and permits will be required for the project. Copies of any correspondence between the applicant and the review agencies, as well as the permit or waiver, shall be sent to both the Township and this office.

- **Scio Township Board of Trustees (BOT):** After approval of the site plan by the Township Planning Commission, detailed engineering drawings are required and approvals from all applicable agencies will be required for BOT approval.
- **Scio Township Fire Department:** Review and approval is required.
- **Scio Township Planning Consultant:** Review and approval is required.
- **Washtenaw County Road Commission (WCRC):** Review and approval is required.
- **Washtenaw County Water Resources Commissioner's Office (WCWRC):** Review and approval may be required.
- **Washtenaw County SESC:** A permit will be required prior to construction.
- Other permits/approvals/etc. may be required.

It is noted that additional comments may be generated from information presented in future submittals. If you have any questions, please contact us at (734) 522-6711.

Sincerely,
OHM Advisors,

Sally L Bos
Sally L. Bos, P.E.

Stacie L Serdar
Stacie L. Serdar

SLB/SLS/fcfp

cc: Steve Wyzgoski, Township Utilities Director
David Rowley, Township Administrator
Rich Hughes, Township Field Utilities Supervisor
Will Hathaway, Township Supervisor
Frances Szuma, Township Planning Coordinator
Kristy Aiken, Township Office Coordinator
Jessica Flintoft, Township Clerk
Andrew Houde, Township Fire Chief
Doug Armstrong, Assistant Township Fire Chief
Doug Lewan, CWA, Township Planner
Laura Kreps, CWA, Township Planner
Scott Miller, P.E., WCWRC
Theresa Marsik, P.E., WCWRC
Gary Streight, P.E., WCRC
Brandon Chaney, Nederveld, Inc. (via e-mail)
Jason Van Ryn, Nederveld, Inc. (via e-mail)
Mark Sims, Dealership Acquisitions (via e-mail)

P:\0126_0165\SITE_ScioTwp\2021\0159211120_Belmark Lanes_MUNI\01_Site Plan\SP#2\Belmark Lanes_SP#2_2021-12-06.docx

Scio Township Fire Department

From: Assistant Chief/Fire Marshal Armstrong

Date: November 29, 2021

Belmark / Tesla

RE: SP #21019

Thank you for the updated plans received via email on 11/24/2021. The common travel pathways and the updated egress discharge on the west side of the service bay was helpful in evaluating the overall exit plan.

Means of Egress

Maximum travel distance is 100 feet from any location to an exit discharge for suppressed business occupancies. There are a several areas within the building that do not meet this requirement.

Items to be addressed: Additional exits are needed on the east side, on the south side, and on the north side to provide compliance with this requirement.

Fire Department Access

The Fire Lane on the west side of the building is less than the required 20-foot width.

Items to be addressed: No Parking/Fire Lane signs will need to be posted on the east/west sides of the building to ensure the Fire Access Roads remain accessible. A Knox Key Box will need to be installed at an approved location prior to occupancy.

On-site Storage

Items to be addressed: An NFPA 704 hazard classification for all items that will be planned for onsite storage is required. Submit expected quantities of any batteries or hazardous items

Fire Alarm Notification

Items to be addressed: Coordinate with the Fire Department on location of Fire Alarm panel.

The above items will need to be satisfactorily resolved prior to Fire Department approval.

Please feel free to contact me with any questions.

Doug Armstrong
Assistant Chief/Fire Marshal
Scio Township Fire Department
darmstrong@sciotownship.org

1055 N. Zeeb Rd., Ann Arbor, MI 48103-1472.
(734) 665-6001 x314
(734) 665-0825 (fax)

NEDERVELD

November 24, 2021

Mr. Doug Lewan
Scio Township Planning Department
827 N. Zeeb Road
Ann Arbor, MI 48103-1599

Site Plan Response Letter
File No.: SP #21019
Applicant: Mark Sims, Dealership Acquisition
Project Name: Tesla Automotive dealership
Location: 3530 Jackson Road (H-08-23-400-029)
Current Zoning: C-4, Composite Commercial

Dear Doug:

The review letters dated November 18, 2021, as provided by Carlisle-Wortman Associates and November 22, 2021, as provided by OHM Advisors were received and reviewed by the design team. The review comments outlined in the aforementioned letters are provided below (*in italics*) for reference. Our response to these comments is provided below (**in bold**).

Carlisle-Wortman Comments

1. *Modify the site data table to match dimensions provided on site plan.*

   The site data table is updated to reflect the dimensions provided on C-205.

2. *Township engineer to evaluate BMPs for increased maximum lot coverage.*

   Two (2) BMP's are provided on the plan to allow for 20% maximum lot coverage. A detail of the existing storm water infiltration trench is provided on sheet C-600, and a detail of the proposed hydrodynamic separator is provided on sheet C-500.

3. *Washtenaw County Road Commission and Township Engineer review of traffic impacts.*

   So Noted. The applicant has requested review from the Washtenaw County Road Commission.

4. *Township Engineer review of utility plan and storm water management.*

   So noted.

5. *Label customer, employee, and vehicle storage parking spaces.*

   A parking legend is provided on sheet C-205 listing parking types and quantities.

6. *Correct numbering of parking spaces along the north portion of the eastern property line (27 spaces are provided, not 36).*

   The parking label is corrected (see sheet C-205).

7. *Landscape plans are required to be signed and sealed by a registered Landscape Architect.*

   The landscape plans are signed and sealed by James Walter, Registered Landscape Architect (see sheet L-100).

8. *All plantings should be labeled on the plan and noted which landscape requirement they are meeting.*

   The landscape requirement calculations, plant legend, and plant labels are provided on sheet L-100.

9. *Additional plantings around the supercharger electric cabinet in the rear parking lot will need to be provide in accordance with Section 36-345(b)(10)*

   Additional shrubs are proposed to screen the supercharger cabinet (see sheet L-100).

10. *Additional roof-top equipment screening is required in accordance with Section 36-345(b)(10).*

    Existing Roof-top equipment is screened by the proposed parapet wall at the front façade. Please refer to Elevations 2, 3, 4 on A4.01a for relevant keynotes which address screening.

    The roof top units are placed further away from the from the front Façade and will not be visible at eye level. Please see proposed rendering of the eye level view from Jackson Road on Sheet A5.02.

11. *Review of signs will be conducted under a future sign permit review.*

    So noted. A preliminary sign package is included in the submittal packet for the Township's reference.

12. *Replace use of EIFS with a high-quality building material.*

    In order to maintain the structural integrity of the existing pre-engineered building, an EIFS clad parapet wall attachment is proposed as a viable option to not add additional structural loads to the front facade. Materials such as brick, stone, steel and concrete masonry would require extensive re-work to the façade and will not be structurally feasible without adding extensive structural support which would be detrimental in our efforts to comply with the other listed JROD Design Standards and achieve the proposed design intent.

13. *Demonstrate how JROD design standards have been met.*

    See sheet A0.00 for the "JROD DESIGN GUIDELINES – SEC. 36-76(f)", which lists the JROD Design Standards applicable to the site and how they have been met. Sheet A4.01a contains all the necessary calculations for complying with the JROD Design Standards.

OHM Comments

SITE UTILITIES

1. *The applicant shall note that the building footprint shall be within a 250-foot radii from an existing (or proposed) fire hydrant. Based on the discussion had with the Scio Township Fire Department at the Staff Review Meeting held on November 22, 2021, an additional hydrant near the rear of the building will be required. Due allowable distances for hydrant services outlined in the Scio Township Standards, this hydrant will be required to be installed along a looped water main. The applicant shall review and revise accordingly.*

   A looped 8" water main is extended around the existing building and a new hydrant is provided. With the existing hydrant in the Jackson Road ROW and the proposed hydrant on the northside of the building, the proposed dealership has full 250 ft. hydrant coverage (see sheets C-206 & C-300 for detail).

2. *While the applicant has noted a significant decrease in the number of sanitary sewer REUs required for this site, the applicant shall modify their calculations to indicate how many REUs are needed as they have currently only provided the calculations in gallons per day. If additional sanitary sewer REUs over the existing assigned amount of 10.5 are required, the applicant shall be required to request these in writing from the Township Board of Trustees during the final detailed engineering approval.*

   A sanitary sewer basis of design was performed and 5 REU's are required for the proposed automotive dealership. With the existing 10.5 REU's, no additional REU's are required at this time.

3. *The applicant shall note that trees are placed in close proximity to the existing sanitary sewer utility. It is recommended that the applicant relocate trees that are above the existing utilities to avoid future root infiltration and damage.*

   So Noted. The closest proposed tree is 8' away from the existing sanitary sewer line. Refer to landscape note# 8 (L-100) relating to existing utilities.

STORMWATER MANAGEMENT

4. *It is noted that the proposed project has addition and subtraction of impervious surfaces from the existing site. The applicant shall supply a pre- and post-development impervious surface calculation to determine the net change in impervious surface. If more than 1,500-square feet of impervious surface is added to the site, full Washtenaw County Water Resources Commissioner's Office (WCWRC) Standards will be required.*

   A pre- and post-development impervious surface calculation was performed and found a net reduction of 8,988 sq. ft. of impervious surface (see site data on sheet C-100 for detail).

5. *The applicant shall clarify the capacity and design details of the existing stormwater infiltration trench noted on Sheet C-300.*

   A sheet is added to detail the previously installed infiltration trench A (see sheet C-600 for detail). The grading certificate for infiltration and supporting photos (provided by Washtenaw Engineering) is included in the submittal packet.

PARKING LOT LAYOUT & PAVING/GRADING

6. *The applicant shall note that the fire truck vehicle turning path appears to be in conflict with the proposed sidewalk. The applicant shall review and revise accordingly.*

   The fire truck vehicle turning path is revised (see sheet C-206).

7. *The applicant shall note that all parking spaces adjacent to greenspace shall either have curb and gutter or wheel stops provided to prevent cars from leaving the pavement and damaging the grass.*

   MDOT E-2 curb is proposed along all parking areas abutting greenspace (see sheet C-205 for detail).

8. *It is recommended that the trash receptacle approach concrete be increased in size to prevent rutting of the asphalt caused by the garbage truck.*

   The 15 ft. heavy-duty concrete pad provided in front of the dumpster enclosure allows for a front-loading refuse truck's front axle to be on pad during waste removal. No changes are made.

PRELIMINARY DETAILED ENGINEERING COMMENTS

1. *The applicant shall provide spot elevations at all four (4) corners of all barrier free parking spaces and access aisles, as well as along both sides of all proposed sidewalk at 50-foot intervals. The applicant shall note that the cross-slope shall not exceed 2% per ADA Standards.*
2. *The applicant shall provide a curb and gutter detail and indicate the intended locations of the curb and gutter on the plans.*
3. *An Engineer's Certificate of Outlet, signed and sealed by a licensed professional engineer in the State of Michigan, shall be provided on the plans.*
4. *The applicant shall provide an engineer's estimate of probable cost for the project with the detailed engineering submittal.*

Detailed engineering comments will be addressed following approval of the site plan.

We trust that you will find the above comments acceptable, and we look forward to your approval of the plans. Should you have any questions or concerns with these responses please feel free to contact me at (734) 945-3220 or via email at jvanryn@nederveld.com for clarification.

Sincerely,



Jason Van Ryn, PE
Project Engineer

GRADING CERTIFICATE FOR INFILTRATION TRENCH A

Date: November 23, 2021

Scio Township
Utilities Department
827 N. Zeeb Road
Ann Arbor, MI 48103

Site Name: Belmark Lanes

Site Plan #: ASP #18020

Sidwell #: H-08-23-400-029

Design Engineer and Firm Name: Washtenaw Engineering Co, Joseph K. Maynard

Address: 3526 W. Liberty Street, Suite 400, Ann Arbor, MI 48103

Phone: (734) 761-8800

Owner: Belmark Lanes

Address: 3530 Jackson Road, Ann Arbor, MI 48103

Phone: _____ Fax: _____

I hereby certify that the above-referenced site was graded in substantial accordance with the approved engineering plans dated 11/10/2020. On October 13, 2020 I personally witnessed the excavation and dimension of the trench (see attached photos) and existing sand formation is in compliance with proposed plan.

Engineer's Seal

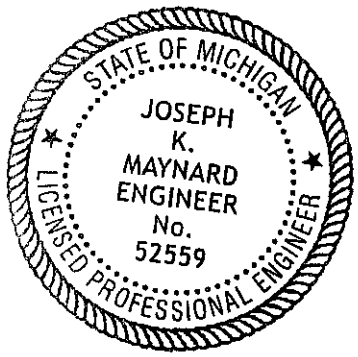

Sincerely

Joseph K. Maynard, P.E.
Printed Name of Registered State of Michigan Engineer

Signature

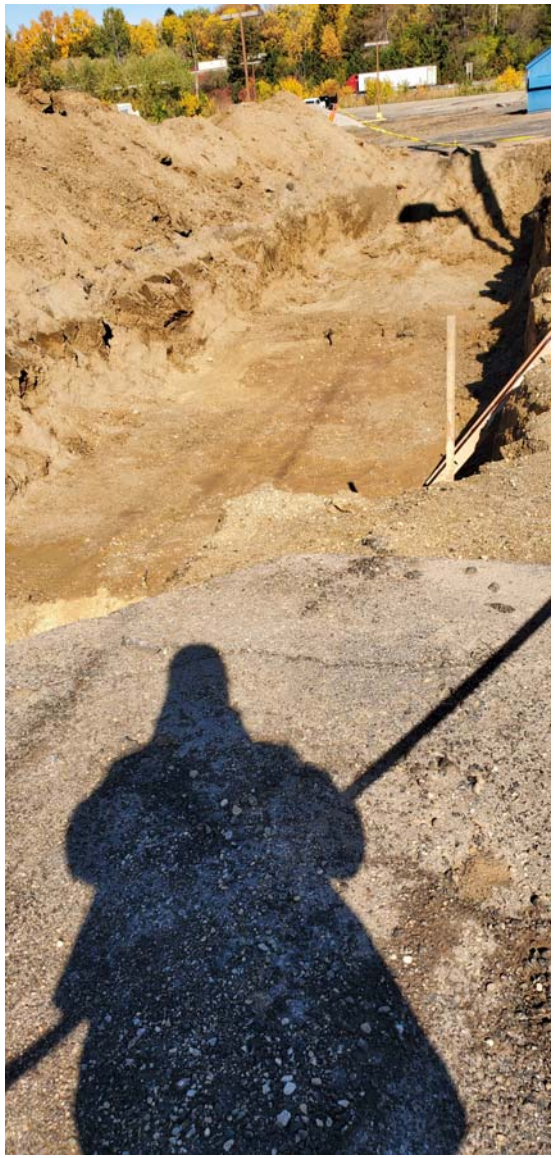

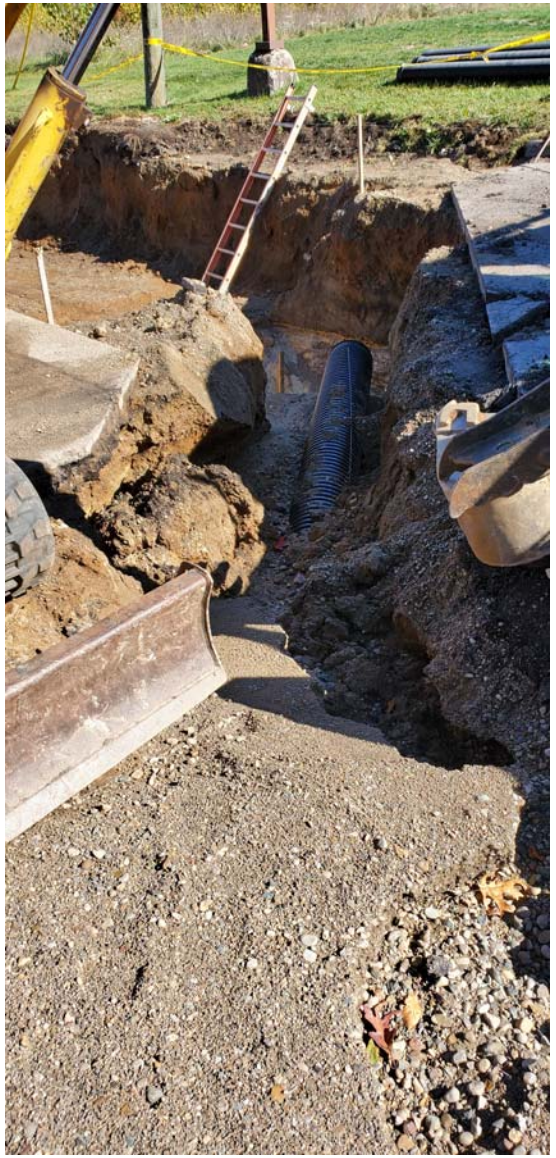

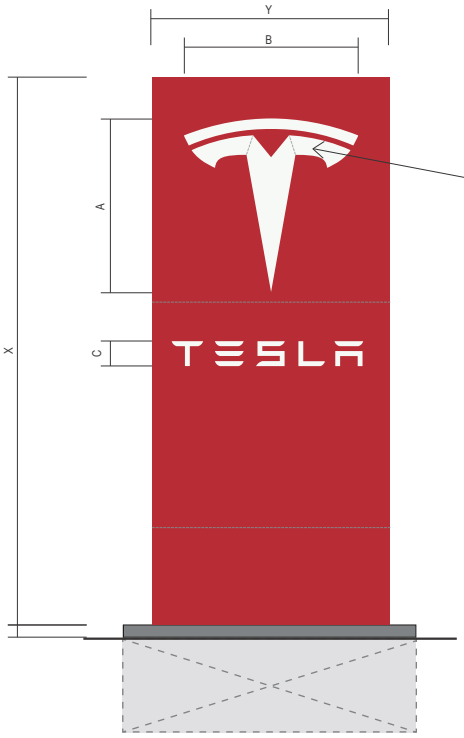

SEAMS IN ACRYLIC ONLY WHEN LOGO IS OVER 6'-0"

NOTE:
SEAMS IN ALUMINUM REQUIRED. LOCATION WILL VARY- AVOID COPY & LOGO, IF POSSIBLE

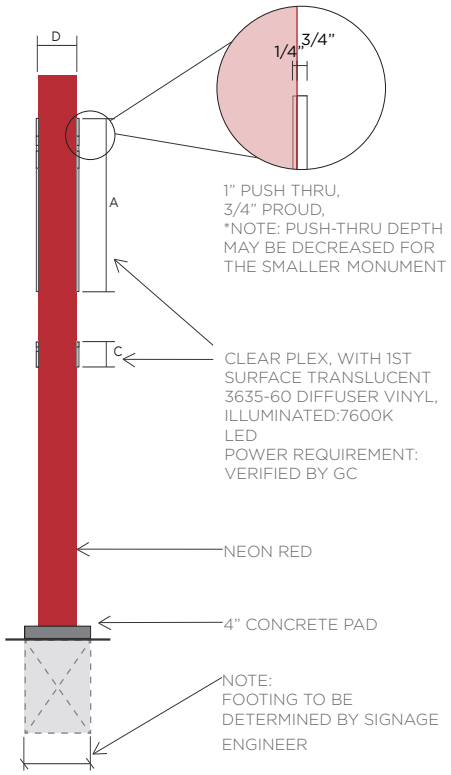

1" PUSH THRU,
3/4" PROUD,
*NOTE: PUSH-THRU DEPTH MAY BE DECREASED FOR THE SMALLER MONUMENT

CLEAR PLEX, WITH 1ST SURFACE TRANSLUCENT 3635-60 DIFFUSER VINYL, ILLUMINATED:7600K LED
POWER REQUIREMENT: VERIFIED BY GC

NEON RED

4" CONCRETE PAD

NOTE:
FOOTING TO BE DETERMINED BY SIGNAGE ENGINEER

PT1
BM 2087-10
NEON RED
PMS 19-1664
SATIN FINISH

CLEAR PLEX

TRANSLUC. 3635-60 DIFFUSER VINYL

MONUMENT						
X	Y	A	B	C	D	SQ. FT.
6'-0"	2'-7 1/4"	1'-10 3/4"	1'-10 7/8"	3 1/4"	1'-0"	15.63
7'-0"	3'-0 1/2"	2'-2 5/8"	2'-2 3/4"	3 7/8"	1'-0"	21.29
8'-0"	3'-5 5/8"	2'-6 3/8"	2'-6 1/2"	4 3/8"	1'-0"	27.75
9'-0"	3'-10 7/8"	2'-10 1/4"	2'-10 3/8"	5"	1'-2"	35.16
10'-0"	4'-4"	3'-2"	3'-2"	5 1/2"	1'-2"	43.33
12'-0"	5'-2 1/2"	3'-9 5/8"	3'-9 7/8"	6 1/2""	1'-6"	62.50
15'-0"	6'-6"	4'-9"	4'-9 1/4"	8 1/4"	1'-6"	97.50
20'-0"	8'-8"	6-4"	6-4 3/8"	11"	2'-0"	173.33

*TO BE VERIFIED WITH ENGINEERING

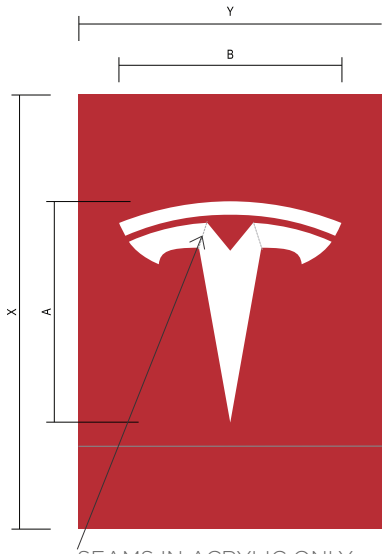

SEAMS IN ACRYLIC ONLY
WHEN LOGO IS OVER 6'-0"

NOTE:
AVOID SEAMS IN ALUMINUM IF POSSIBLE. IF REQUIRED,AVOID COPY & LOGO, IF POSSIBLE

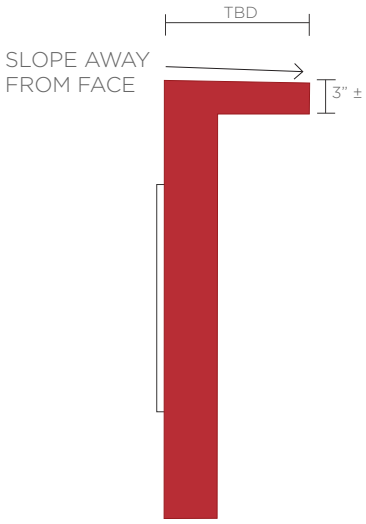

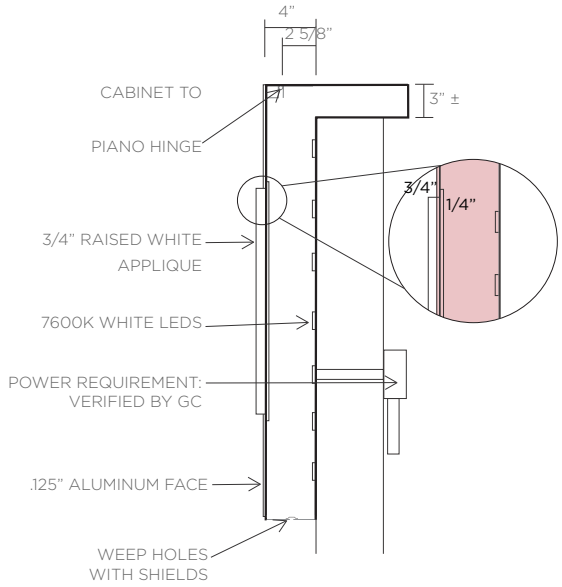

EXTERIOR CABINET: T				
X	Y	A	B	SQ. FT.
4'-0"	2-9 1/2"	2'-0 3/8	2'-0 1/2"	11.17
5'-0"	3'-5 7/8"	2'-6 1/2"	2'-6 3/4"	17.45
6'-0"	4'-2 1/4"	3'-0 3/4"	3'-0 7/8"	25.13
7'-0"	4'-10 5/8"	3'-6 7/8"	3'-7"	34.20
8'-0"	5'-7"	4'-1"	4'-1 1/8"	44.67
9'-0"	6'-3 1/2"	4'-7"	4'-7 1/4"	55.63
10'-0"	6'-11 2/4"	5'-1 1/8"	5'-1 1/2"	69.79
11'-0"	7'-8 1/8"	5'-7 1/4"	5'-7 1/2"	84.45
12'-0"	8'-4 1/2"	6-1 3/8"	6-1 3/4"	100.50
13'-0"	9'-1"	6'-7 1/2"	6'-7 7/8"	118.08
14'-0"	9'-9 3/8"	7'-1 5/8"	7'-2"	136.94

PT1
BM 2087-10
NEON RED
PMS 19-1664
SATIN FINISH

CLEAR
PLEX

TRANSLUC.
3635-60
DIFFUSER
VINYL

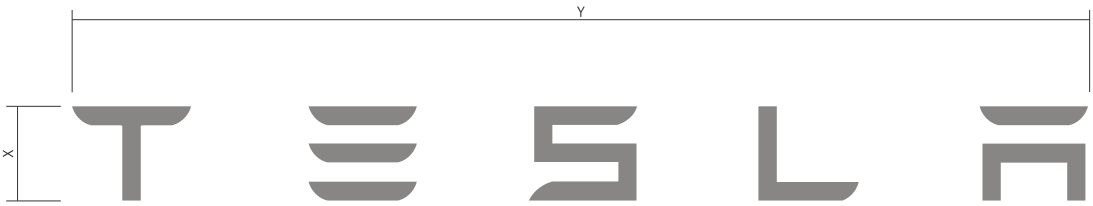

VENDOR TO INDICATE SCOPE OF WORK REQUIRED BY GC

1. SHOW LOCATION OF EACH PASS THRU FOR EACH "SECTION" OF THE WORDMARK, TYP.
2. LOCATION AND SIZE OF WIREWAY ON BACKSIDE OF WORDMARK.
3. SHOW DETAILS FOR EXTERIOR WORKWAY AND INTERIOR WIREWAY INSTALLATIONS
4. SHOW LOCATION OF 14 AND 16, POWER SUPPLY, DISCONNECT SWITCH AND PRIMARY

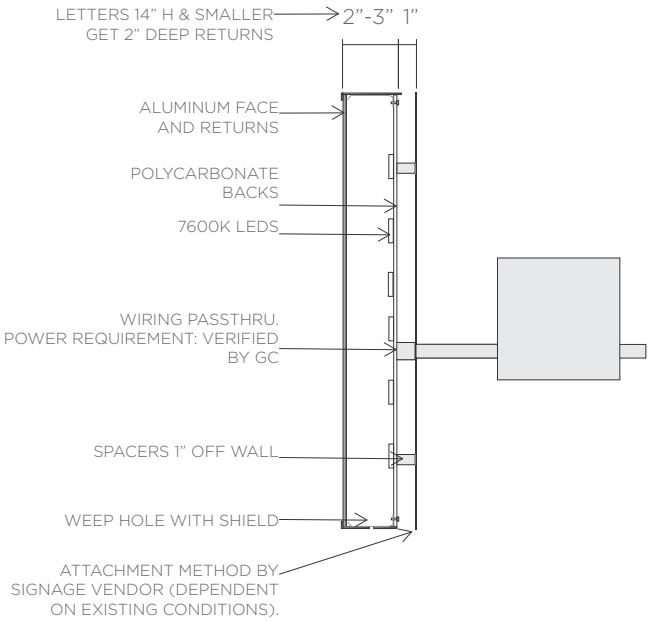


SPACER PAINT TO MATCH WALL SATIN FINISH

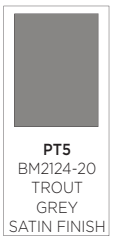
PT5 BM2124-20 TROUT GREY SATIN FINISH

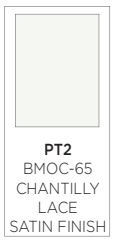
PT2 BMOC-65 CHANTILLY LACE SATIN FINISH



MATTHEWS BR. ALUM. 41342SP SATIN FINISH

20% SPACING		
X	Y	SQ. FT.
1'-6"	16'-2"	24.00
2'-0"	21'-6 3/4"	43.13
2'-6"	26'-11 1/2"	67.40
3-0"	32'-4 1/8"	97.03
3'-6"	37'-8 7/8"	132.09
4'-0"	43'- 1 1/2"	172.50

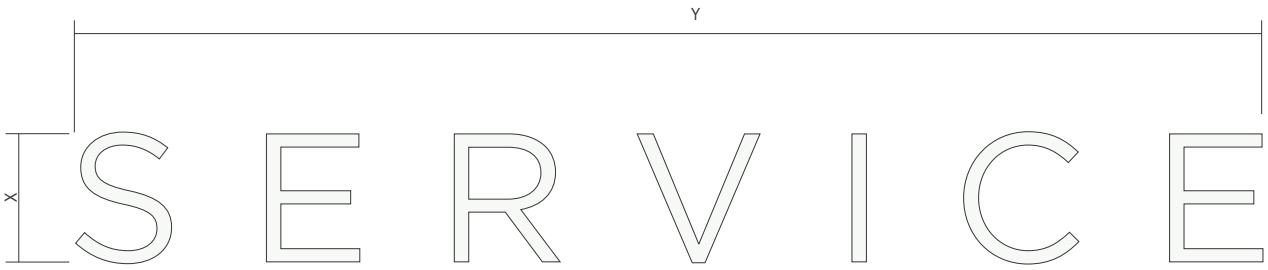

X: (MEASURED OFF HEIGHT OF "E")
Y: (WILL VARY FROM TABLE, TYP. LINE UP WITH OUTSIDE ENDS OF BAY DOORS

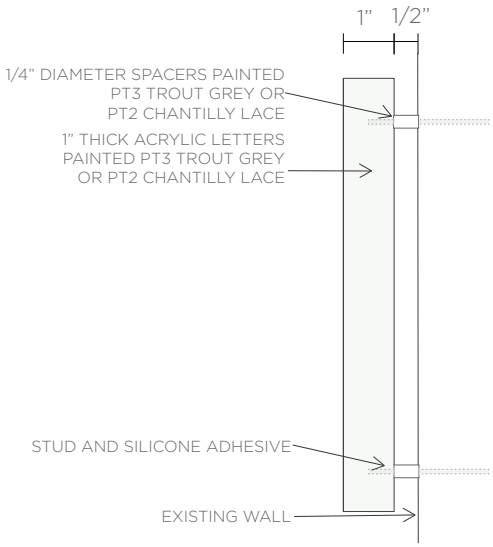

FOR LIGHT BACK GROUND OR FOR DARK BACK GROUND

PT5
BM2124-20
TROUT GREY
SATIN FINISH

PT2
BMOC-65
CHANTILLY LACE
SATIN FINISH

PX
TO MATCH WALL
VERIFY

SERVICE		
X	Y	SQ. FT.
9-1/2"	7'-4 1/2"	5.84
1'-0"	9'-3 3/8"	9.28
1'-3 1/2"	12'-0"	15.5
1'-6"	13'-11"	20.88

3530 JACKSON ROAD

TESLA AUTOMOTIVE DEALERSHIP
SITE PLAN SET

DESIGN TEAM CONTACTS

APPLICANT
DEALERSHIP ACQUISITIONS
17408 EDGEWATER DR.
LAKEWOOD, OH 44107
ATTN: MARK SIMS

ENGINEER/SURVEYOR
NEDERVELD, INC.
3037 MILLER RD.
ANN ARBOR, MI 48103
P: 734.929.6963
ATTN: BRANDON CHANEY

ARCHITECT
CHIPMAN DESIGN ARCHITETURE
1350 E. TOUHY AVE. FIRST FLOOR
DES PLAINES, IL 60018
P: 847.298.6900
ATTN: ABDUL ALI

UTILITY CONTACTS

THE FOLLOWING UTILITIES ARE LOCATED IN OR NEAR THE RIGHT-OF-WAY FOR THIS PROJECT

PRIVATE UTILITIES

MISS DIG: 1-800-482-7171

TELEPHONE:
AT&T (FORMERLY SBC) TEL 248-456-8256
54 N. MILL STREET, 4TH FLOOR
PONTIAC, MI 48342
CONTACT: LINDA DENNISUK

ELECTRICITY:
800-477-4747(OUTAGES)
DTE PLAN & DESIGN CENTER TEL 734-397-4321
FAX 734-397-4143
MOLLY LUEMPERT-COY, REG. MGR. TEL 734-332-8155
CELL 313-820-3881
PAUL GANTZ, REGIONAL RELATIONS TEL 734-332-8145
MELVIN MCCOY JR., PLANNING SUPR TEL 734-397-4011
FAX 734-397-4019
ANDREW DADSWELL, CONSTRUCTION TEL 734-397-4338
CLAY COMBEE, RELOCATION TEL 734-397-4112
FRANK TELLO, PLANNER TEL 734-397-4265
STREET LIGHTS: LANCE ALLEY TEL 734-397-4188
RAY ZOIA, MANAGER TEL 734-397-4149
8001 HAGGERTY ROAD, BELLEVILLE, MI 48111

ITC TRANSCO: EMERGENCY TEL 866-482-3637
CYNTHIA STUMP, AREA MANAGER TEL 248-946-3503
FAX 248-946-3492

NATURAL GAS:
GAS LEAK EMERGENCY: **1-800-947-5000**
DTE/MICHCON TEL 800-477-4747
17150 ALLEN RD, MELVINDALE, MICHIGAN 48122
LAURIE FORRESTER, TEL 313-389-7261
PUBLIC IMPROVEMENT COORD FAX 313-389-7771
FORRESTERL@DTEENERGY.COM
MICHAEL FEDELE, PLAN/CONSTRUCT TEL 313-389-7211
BOB CZAPIEWSKI, CONSTR/MAINT TEL 734-544-7850
GREG JOHNSON, DAMAGE PREVENT TEL 734-544-7834
DENNIS LAUER, SERVICE PLANNER TEL 734-544-7830
KEIR KRASSA, DISTR. SUPR. TEL 734-544-7811
BARBARA SAUNDERS, DISTRIBUTION DESIGN TEL 313-235-5111

COMCAST, (CABLE TV) :
OUTAGES: **1-248-809-2757**
FRED EASTON, GOV'T AFFAIRS
5855 INTERFACE DRIVE; ANN ARBOR, MI 48103
TEL 734-254-1888 FAX 734-254-1877
ROD BATDORFF
25626 TELEGRAPH RD, SOUTHFIELD, MI 48033
TEL 248-809-2723 FAX 248-809-2721
RON SUTHERLAND, CONSTR COORDINATOR
TEL 734 992-2967 CELL 313-998-8300
WWW.MIDETWEST_CONSTR@CABLE.COMCAST.NET
TODD SHARP, CONSTR. CELL 734-216-8431

PUBLIC UTILITIES

SCIO TOWNSHIP UTILITY DEPARMENT:
LOCATED AT 827 NORTH ZEEB ROAD
STEVE WYZGOSKI, UTILITY DIRECTOR: (734) 369-9350
EMERGENCIES: 734-651-4770

WASHTENAW CO. SOIL EROSION DIVISION:
KATIE LEE, AREA PROGRAM ASSIST. TEL 734-222-3978
FAX 734-222-3930, CELL 734-320-0122

WATER RESOURCES COMMISSIONER'S OFFICE
THERESA M. MARSIK, P.E., STORMWATER ENGINEER
705 N. ZEEB RD., ANN ARBOR, MI
DIRECT: (734) 222-6844
OFFICE:(734) 222-6860
FAX: (734) 222-6803
MARSIKT@WASHTENAW.ORG
HTTPS://WWW.WASHTENAW.ORG/DRAINS

MDEQ PERMITS:
WATER PATRICK BRENNAN TEL 517-513-2432
WATER JERRY DRAKE TEL 517-937-6799
SANITARY BRENT BODNAR TEL 517-243-8011
SANITARY SUSAN BISHOP TEL 517-284-6660
JOINT PERMIT, LUKE GOLDEN TEL 517-416-7001
FAX 517-780-7855

WASTE MANAGEMENT (REFUSE/RECYCLE/YARD WASTE):
WM CUSTOMER SERVICE-RESIDENTIAL TEL 866-797-9018
WM OPERATIONS (ALL OF THE BELOW) FAX 734-449-7314
KEITH PINE, AREA MANAGER CELL 586-791-8440

DEREK LOGAN, COM. & RO ROUTE MGR. CELL 586-864-5941
MICHAEL COBETTO, RES. ROUTE MGR. CELL 248-640-8118

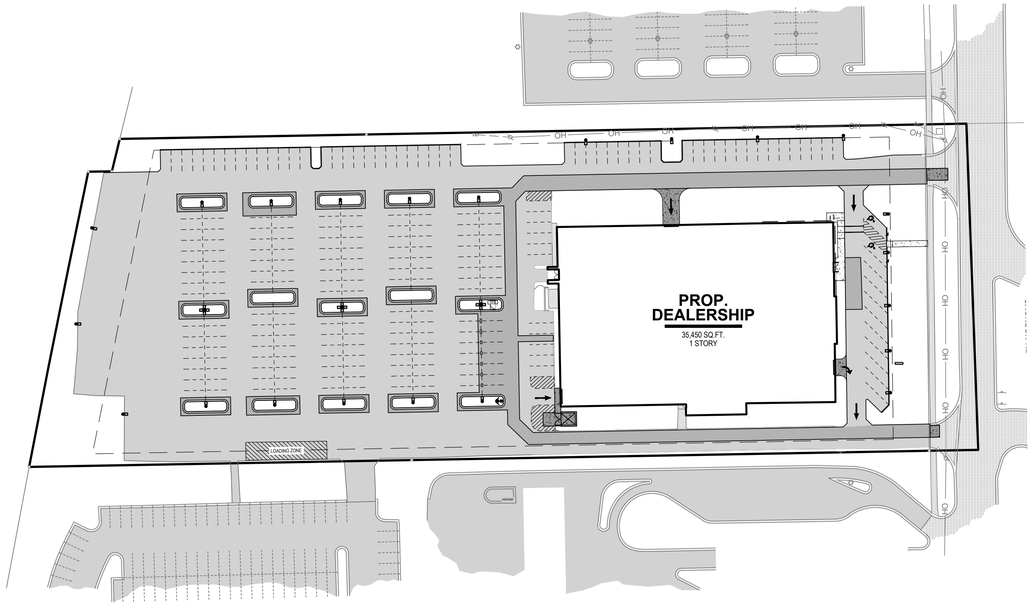

PLAN VIEW
SCALE:1" = 60'

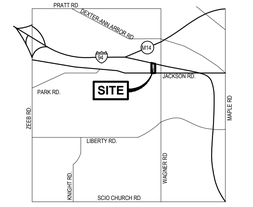

LOCATION MAP
NOT TO SCALE

SHEET INDEX

CIVIL PLANS	
INDEX / COVER SHEET	C-100
EXISTING SITE CONDITIONS PLAN	C-201
DEMOLITION PLAN	C-203
SITE LAYOUT PLAN	C-205
VEHICLE ACCESS PLAN	C-206
S.E.S.C. & UTILITY PLAN	C-300
DETAILS AND SPECIFICATIONS	C-500
LANDSCAPE PLAN	L-100
PREVIOUSLY INSTALLED INFILTRATION TRENCH A	C-600
LIGHTING/PHOTOMETRIC PLAN	1 OF 1
ARCHITECTURAL PLANS	
COVER SHEET	A0.00
FURNITURE FIXTURE EQUIPMENT & SIGNAGE PLAN	A2.02
EXTERIOR ELEVATIONS	A4.01a
EXTERIOR ELEVATIONS & FINISH SCHEDULE	A4.01b
EXTERIOR RENDERING	A5.01
EXTERIOR RENDERING	A5.02

SITE DATA

PARCEL ADDRESS: 3530 JACKSON RD
PARCEL TAX NUMBER: H-08-23-400-029
EXISTING ZONING DISTRICT: C-4, COMPOSITE COMMERCIAL
EXISTING USE: BOWLING ALLEY/RESTAURANT
PROPOSED USE: AUTO DEALERSHIP

	REQUIRED	EXISTING	PROPOSED
LOT AREA:	1.00 ACRES	4.78 ACRES	4.78 ACRES
LOT WIDTH:	150 FT.	274 FT.	274 FT.
BUILDING SIZE:		35,646 SQ. FT.	35,450 SQ.FT.
LOT COVERAGE:	15% (20% - 2 BMP'S)	17.9%	17.9%
FLOOR AREA COVERAGE:		17.9%	17.9%
BUILDING HEIGHT:		1 STORY	1 STORY
IMPERVIOUS AREA:		160,925 SQ. FT.	151,937 SQ. FT.
IMPERVIOUS AREA NET CHANGE:			-8,988 SQ.FT

BMP'S PROVIDED: EXISTING STORM WATER INFILTRATION TRENCH & PROPOSED HYDRODYNAMIC SEPARATOR (SEE SHEETS C-300 & C-600 FOR DETAIL).

BUILDING SETBACKS:	REQUIRED	EXISTING	PROPOSED
FRONT:	50 FT.	69.6 FT.	76.3 FT.
SIDE:	20 FT.	33.3 FT.	33.3 FT.
REAR:	50 FT.	402.4 FT.	402.4 FT.

PARKING SETBACKS:	REQUIRED	EXISTING	PROPOSED
FRONT:	30 FT. GREENBELT	33.5 FT.	33.5 FT.
SIDE:	10 FT.	7.1 FT.	10 FT.
REAR:	10 FT.	13.2 FT.	13.4 FT.

PARKING (AUTO SALES):
1 SPACE PER 200 SF OF SHOWROOM FLOOR AREA PLUS 3 PER EACH SERVICE STALL
2,900 SF / 200 SF = 15 SPACES
20 SERVICE STALLS x 3 = 60 SPACES
TOTAL PARKING:
REQUIRED: 75 SPACES
PROVIDED: 245 SPACES (TWO (2) A.D.A SPACES)*
(12 CUSTOMER + 21 EMPLOYEE + 16 ELECTRIC VEHICLE + 196 VEHICLE STORAGE/AUTO REPAIR PARKING = 245 SPACES)

*NUMBER OF ADA SPACES BASED OFF OF TOTAL NUMBER OF PROVIDED CUSTOMER AND EMPLOYEE SPACES (33 SPACES TOTAL)

PROJECT NARRATIVE

EXISTING SITE:

THE PROJECT SITE CONTAINS ONE (1) EXISTING STRUCTURE (BEL-MARK LANES BOWLING ALLEY). THE SITE HAS FRONTAGE ALONG JACKSON ROAD TO THE SOUTH AND I-94 TO THE NORTH. THERE IS ONE (1) EXISTING INFILTRATION TRENCH FOR STORM WATER TREATMENT (PER WASHTENAW ENGINEERING'S PLANS - DATED 6-19-20). THE SITE HAS EXISTING WATER, ELECTRICAL AND SANITARY SEWER THAT SERVICE THE EXISTING STRUCTURE.

PROPOSED IMPROVEMENTS:

THE PROPOSED PROJECT INCLUDES MODIFICATIONS OF EXISTING 1-STORY BUILDING, MODIFICATIONS OF EXISTING PARKING LOT AND DRIVES AND A NEW DUMPSTER ENCLOSURE FOR THE PROPOSED TESLA AUTO DEALERSHIP. ADDITIONAL IMPROVEMENTS INCLUDE NEW LANDSCAPING, STORMWATER MANAGEMENT IMPROVEMENTS, SITE LIGHTING AND SIGNAGE TO MEET SCIO TOWNSHIP STANDARDS.

LEGAL DESCRIPTION

Property Address:
3530 Jackson Road

Legal Description - Tax Parcel: H-08-23-400-029 (By Others)
Commencing at the SE corner of Section 23, T2S, R5E, Scio Township, Washtenaw County, Michigan, thence S87°55'38"W 553.00 feet along the south line of said Section 23, (said point being N87°55'38"E 2123.60 feet from the S 1/4 corner of said Section 23); thence N01°02'04"W 66.01 feet to the Point of Beginning, Thence S87°55'38"W 273.67 feet (said line being 66.00 feet North of and parallel to the South line of said section 23; Thence N01°01'44"W 795.89 feet said line being an extension of and easterly line of "Jackson Road Condominium", as recorded in Master Deed Liber 3750, Page 380, Washtenaw County Records, to the southerly Right-of-way line of Interstate-94 Highway; Thence 252.41 feet along the southerly right-of-way line of I-94 in the arc of a curve to the right, radius 13,751.22 feet, central angle 01°03'06", chord S78°40'08"E 252.40 feet; Thence S01°02'04"E 19.80 feet; Thence southeasterly 27.91 feet along the southerly right-of-way line of I-94 in the arc of a curve to the right, radius 13,495.75 feet, central angle 00°07'07", chord S76°20'59"E 27.91 feet; Thence S01°02'04"E 710.00 feet to the Point of Beginning. Being a part of the SE 1/4 of said Section 23 and containing 4.78 acres of land, more or less. Being subject to easements and restrictions of record, if any.

Know what's **below.** **CALL** before you dig.

UTILITY LOCATIONS ARE DERIVED FROM ACTUAL MEASUREMENTS OR AVAILABLE RECORDS. THEY SHOULD NOT BE INTERPRETED TO BE EXACT LOCATIONS NOR SHOULD IT BE ASSUMED THAT THEY ARE THE ONLY UTILITIES IN THIS AREA.

NOTE:
EXISTING UTILITIES AND SERVICE LINES IDENTIFIED AS "PLAN" WERE OBTAINED FROM AVAILABLE AS-BUILT RECORD DRAWINGS. THE CONTRACTOR SHALL VERIFY THE LOCATION, DEPTH AND STATUS OF ALL UTILITIES AND SERVICE LINES PRIOR TO NEW CONNECTIONS.

NEDERVELD
www.nederveld.com
800.222.1868
ANN ARBOR
3037 Miller Rd.
Ann Arbor, MI 48103
Phone: 734.929.6963
CHICAGO
COLUMBUS
GRAND RAPIDS
HOLLAND
INDIANAPOLIS
ST. LOUIS

PREPARED FOR:
Dealership Acquisitions
Mark Sims

17408 Edgewater Dr.
Lakewood, OH 44107
Phone: 216.316.0677

REVISIONS:
Title: Site Plan Submittal
Drawn: BC/WL Checked: BC Date: 10.25.2021
Title: Site Plan Resubmittal
Drawn: BC/WL Checked: BC Date: 11.24.2021

3530 JACKSON ROAD

Cover Sheet
3530 Jackson Road
PART OF THE SOUTHEAST 1/4 OF SECTION 23, T2E, R5E, SCIO TOWNSHIP, WASHTENAW COUNTY, MICHIGAN

STAMP:
STATE OF MICHIGAN
JASON L. VAN RYN
ENGINEER
No. 54207
LICENSED PROFESSIONAL ENGINEER

PROJECT NO:
21500178

SHEET NO:
C-100

21500178-CP1.dwg WL 11/24/2021 12:57

© 2021 Nederveld, Inc.

TREE SURVEY

TAG	COMMON NAME	SCIENTIFIC NAME	DBH	CONDITION	LANDMARK	INVASIVE	REMOVE
1	COLORADO BLUE SPRUCE	*Picea pungens*	16	FAIR			
2	SUGAR MAPLE	*Acer saccharum*	16	GOOD			
3	BRADFORD PEAR	*Pyrus calleryana*	10	GOOD			
4	COLORADO BLUE SPRUCE	*Picea pungens*	15	FAIR			
5	CRABAPPLE	*Malus spp*	18	GOOD	X		
6	CRABAPPLE	*Malus spp*	18	GOOD	X		
7	SUGAR MAPLE	*Acer saccharum*	8	FAIR			
8	COLORADO BLUE SPRUCE	*Picea pungens*	17	GOOD			X
9	COLORADO BLUE SPRUCE	*Picea pungens*	16	GOOD			X
10	APPLE	*Malus spp*	13	GOOD			
11	SILVER MAPLE	*Acer saccharinum*	12	GOOD			
	TOTAL EXISTING DBH =		159		TOTAL REMOVED DBH =		33

BENCHMARKS

BENCHMARK #1 ELEV. = 927.19 (DATUM NAVD88*)
Nail in S'LY face of lightpole, 116'± north of building and 120' ± west of east property line.

BENCHMARK #2 ELEV. = 931.30 (DATUM NAVD88*)
Top arrow on hydrant at southeast corner of property.

*To achieve NAVD88 DATUM, add 0.53' to all elevations.

BOUNDARY & TOPOGRAPHICAL INFORMATION PERFORMED BY MIDWESTERN CONSULTING AND PROVIDED BY CLIENT.

LEGAL DESCRIPTION

Property Address:
3530 Jackson Road

Legal Description - Tax Parcel: H-08-23-400-029 (By Others)
Commencing at the SE corner of Section 23, T2S, R5E, Scio Township, Washtenaw County, Michigan, thence S87°55'38"W 553.00 feet along the south line of said Section 23, (said point being N87°55'38"E 2123.60 feet from the S 1/4 corner of said Section 23); thence N01°02'04"W 66.01 feet to the Point of Beginning, Thence S87°55'38"W 273.67 feet (said line being 66.00 feet North of and parallel to the South line of said section 23, Thence N01°01'44"W 795.89 feet said line being an extension of and easterly line of "Jackson Road Condominium", as recorded in Master Deed Liber 3750, Page 380, Washtenaw County Records, to the southerly Right-of-way line of Interstate-94 Highway; Thence 252.41 feet along the southerly right-of-way line of I-94 in the arc of a curve to the right, radius 13,751.22 feet, central angle 01°03'06", chord S78°40'08"E 252.40 feet; Thence S01°02'04"E 19.80 feet; Thence southeasterly 27.91 feet along the southerly right-of-way line of I-94 in the arc of a curve to the right, radius 13,495.75 feet, central angle 00°07'07", chord S76°20'59"E 27.91 feet; Thence S01°02'04"E 710.00 feet to the Point of Beginning. Being a part of the SE 1/4 of said Section 23 and containing 4.78 acres of land, more or less. Being subject to easements and restrictions of record, if any.

0' 15' 30' 60'
SCALE: 1" = 30'

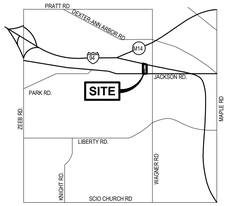

LOCATION MAP

NOT TO SCALE

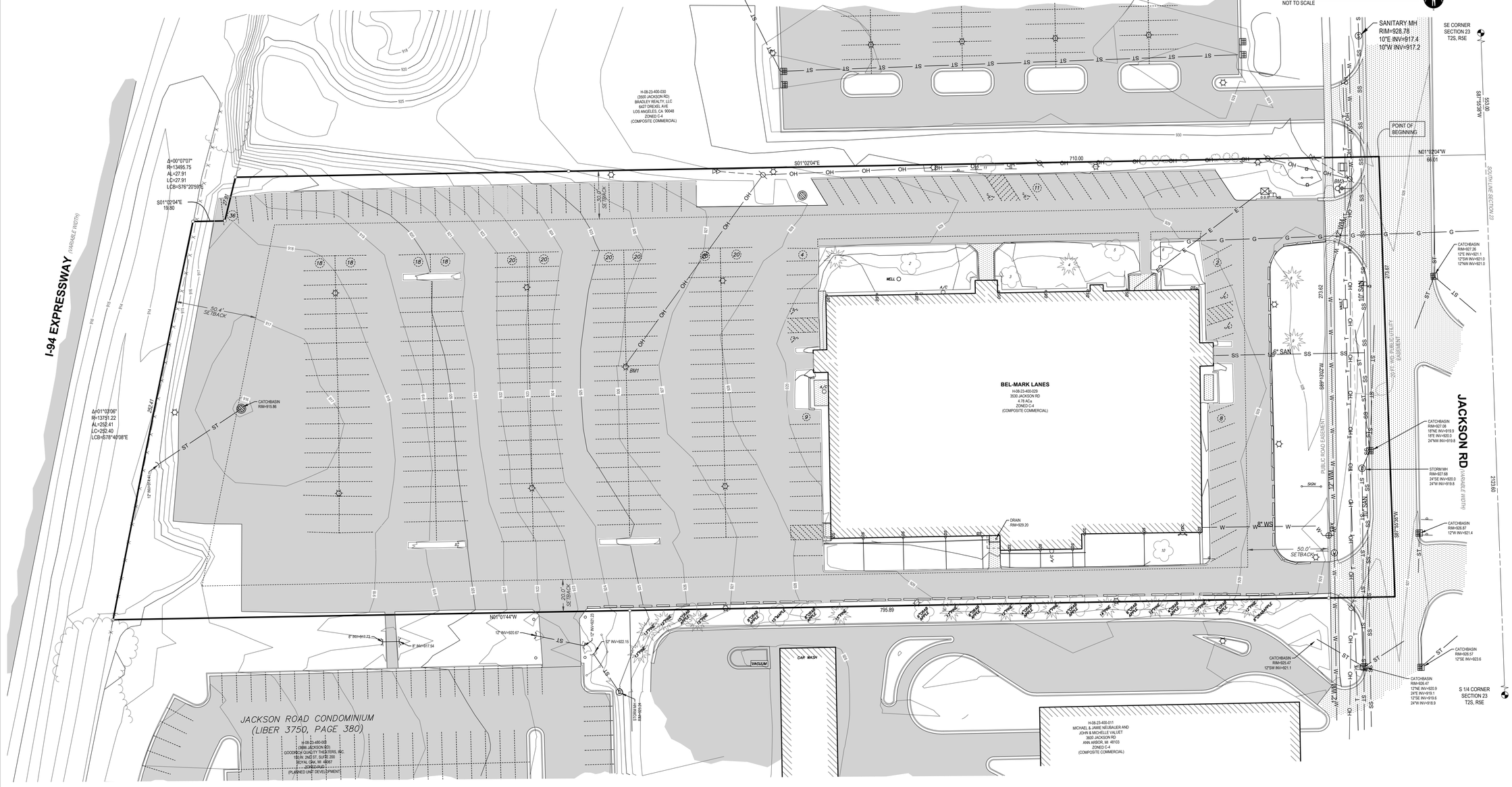

811 Know what's **below.** **CALL** before you dig.

UTILITY LOCATIONS ARE DERIVED FROM ACTUAL MEASUREMENTS OR AVAILABLE RECORDS. THEY SHOULD NOT BE INTERPRETED TO BE EXACT LOCATIONS NOR SHOULD IT BE ASSUMED THAT THEY ARE THE ONLY UTILITIES IN THIS AREA.

NOTE:
EXISTING UTILITIES AND SERVICE LINES IDENTIFIED AS "PLAN" WERE OBTAINED FROM AVAILABLE AS-BUILT RECORD DRAWINGS. THE CONTRACTOR SHALL VERIFY THE LOCATION, DEPTH AND STATUS OF ALL UTILITIES AND SERVICE LINES PRIOR TO NEW CONNECTIONS.

LEGEND

Benchmark	Hand Hole	Monitor Well	Utility Pole	SS	Sanitary
Catch Basin - Round	Hydrant	Post	Water Manhole	ST	Storm
Catch Basin - Square	Iron - Found	Section Corner	Underground Electric	W	Watermain
Electric Manhole	Light Pole	Sign	Fiber Optic	X	Fence
Electric Meter	Mailbox	Sanitary Sewer Manhole	Gas		Asphalt
Electric Riser	Miss Dig Flag - Electric	Stormwater Manhole	Cable		Concrete
Guy Anchor	Manhole	Transformer	Overhead Utility		Existing Building

NEDERVELD
www.nederveld.com
800.222.1868
ANN ARBOR
3037 Miller Rd.
Ann Arbor, MI 48103
Phone: 734.929.6963
CHICAGO
COLUMBUS
GRAND RAPIDS
HOLLAND
INDIANAPOLIS
ST. LOUIS

PREPARED FOR:
Dealership Acquisitions
Mark Sims

17408 Edgewater Dr.
Lakewood, OH 44107
Phone: 216.316.0677

REVISIONS:

Title: Site Plan Submittal		
Drawn: BC/WL	Checked: BC	Date: 10.25.2021
Title: Site Plan Resubmittal		
Drawn: BC/WL	Checked: BC	Date: 11.24.2021

3530 JACKSON ROAD

Existing Site Conditions Plan

3530 Jackson Road
PART OF THE SOUTHEAST 1/4 OF SECTION 23, T2E, R5E, SCIO TOWNSHIP, WASHTENAW COUNTY, MICHIGAN

STAMP:

STATE OF MICHIGAN
JASON L. VAN RYN
ENGINEER
No. 54207
LICENSED PROFESSIONAL ENGINEER

PROJECT NO:
21500178

SHEET NO:
C-201

21500178-CP1.dwg WL 11/24/2021 12:57

© 2021 Nederveld, Inc.

REMOVAL / DEMOLITION NOTES

1. REMOVE EXISTING CONCRETE CURB & GUTTER
2. REMOVE EXISTING TREE
3. REMOVE EXISTING STRUCTURE
4. REMOVE EXISTING CONCRETE PAVEMENT
5. REMOVE EXISTING ASPHALT PAVEMENT
6. SAWCUT EXISTING PAVEMENT
7. REMOVE EXISTING LIGHTPOLE
8. REMOVE EXISTING OVERHEAD LINE
9. REMOVE EXISTING SIGN

LEGEND

- EXISTING GRADE CONTOUR
- EXISTING BITUMINOUS REMOVAL
- EXISTING CONCRETE REMOVAL
- EXISTING UTILITY REMOVAL
- EXISTING TREE REMOVAL
- SAWCUT EXISTING PAVEMENT

0' 15' 30' 60'

SCALE: 1" = 30'

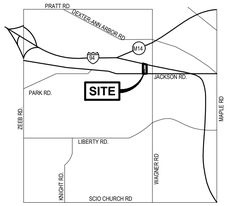

LOCATION MAP

NOT TO SCALE

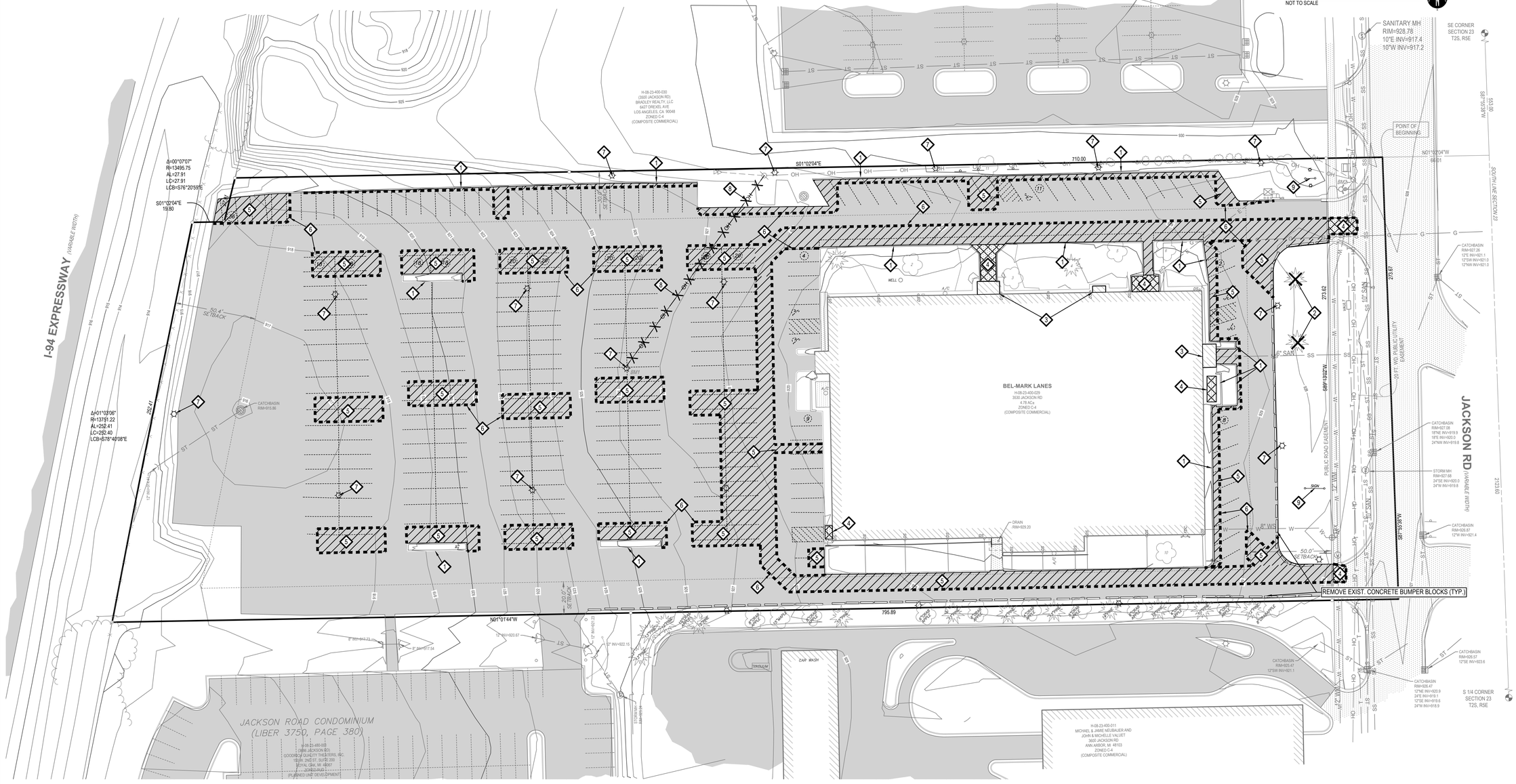

811 Know what's **below.** **CALL** before you dig.

UTILITY LOCATIONS ARE DERIVED FROM ACTUAL MEASUREMENTS OR AVAILABLE RECORDS. THEY SHOULD NOT BE INTERPRETED TO BE EXACT LOCATIONS NOR SHOULD IT BE ASSUMED THAT THEY ARE THE ONLY UTILITIES IN THIS AREA.

NOTE:
EXISTING UTILITIES AND SERVICE LINES IDENTIFIED AS "PLAN" WERE OBTAINED FROM AVAILABLE AS-BUILT RECORD DRAWINGS. THE CONTRACTOR SHALL VERIFY THE LOCATION, DEPTH AND STATUS OF ALL UTILITIES AND SERVICE LINES PRIOR TO NEW CONNECTIONS.

REMOVAL / DEMOLITION NOTES

1) THE CONTRACTOR SHALL NOTIFY THE UTILITY COMPANIES AT LEAST THREE WEEKS PRIOR TO THE BEGINNING OF CONSTRUCTION OPERATIONS. THERE ARE EXISTING UNDERGROUND UTILITIES WHICH CROSS THE PROPOSED REPLACEMENT WORK AREAS. ALTHOUGH THEIR EXACT LOCATION CANNOT BE DETERMINED, IT IS KNOWN THESE UTILITIES ARE LOCATED WHERE DIGGING IS REQUIRED. THE CONTRACTOR SHALL CONDUCT THE REQUIRED EXCAVATION IN THESE AREAS WITH EXTREME CAUTION.
2) ALL EXISTING UTILITY INFORMATION SHOWN IS TAKEN FROM EXISTING RECORDS, AND FIELD VERIFIED WHERE ACCESSIBLE ONLY. INFORMATION OBTAINED FROM EXISTING RECORDS MAY NOT BE COMPLETE OR ACCURATE. THE LOCATION OF ALL EXISTING UTILITIES SHOWN ON THIS PLAN HAVE BEEN DETERMINED FROM THE BEST INFORMATION AVAILABLE AND ARE GIVEN FOR THE CONVENIENCE OF THE CONTRACTOR. THE ENGINEER ASSUMES NO RESPONSIBILITY FOR THEIR ACCURACY. THE CONTRACTOR SHALL FIELD VERIFY FOR ACCURACY, LOCATION AND CONDITION.
3) BEFORE ANY WORK IS STARTED ON THE PROJECT AND AGAIN BEFORE FINAL ACCEPTANCE BY THE TOWNSHIP AND BY THE OWNER, REPRESENTATIVES OF THE TOWNSHIP, THE OWNER AND THE CONTRACTOR SHALL MAKE AN INSPECTION OF THE EXISTING SEWERS WITHIN THE WORK LIMITS WHICH ARE TO REMAIN IN SERVICE AND WHICH MAY BE AFFECTED BY THE WORK. THE CONDITION OF THE EXISTING UTILITIES AND THEIR APPURTENANCES SHALL BE DETERMINED FROM FIELD OBSERVATIONS AND EXISTING VIDEO TAPES. RECORDS OF THE INSPECTIONS SHALL BE KEPT IN WRITING BY THE CONTRACTOR.
4) THE CONTRACTOR IS RESPONSIBLE FOR OBTAINING ALL PERMITS REQUIRED FOR DEMOLITION WORK.
5) ALL EXISTING UTILITIES, SEWERS AND WATER LINES ARE TO REMAIN UNDISTURBED UNLESS OTHERWISE NOTED ON THE PLANS. THE CONTRACTOR SHALL CONTACT AND COORDINATE WITH ALL APPLICABLE UTILITY COMPANIES, MUNICIPALITIES AND AGENCIES BEFORE COMMENCING ANY WORK.
6) THE CONTRACTOR SHALL COORDINATE WITH ALL UTILITY COMPANIES REGARDING REMOVAL OF EXISTING POLES, OVERHEAD WIRES, UNDERGROUND UTILITIES, GUY WIRES, GAS LINES, ETC. ALL ADJUSTMENT OR RECONSTRUCTION WORK, EXCEPT FOR THOSE STRUCTURES OTHERWISE NOTED ON THE PLANS, SHALL BE PERFORMED BY THE CONTRACTOR. EXISTING APPURTENANCES SUCH AS UTILITY POLES AND VALVES BOX SHALL NOT BE DISTURBED BY THE CONTRACTOR DURING CONSTRUCTION.
7) THE CONTRACTOR SHALL MAINTAIN EXISTING UTILITY SERVICE TO ALL ADJOINING PROPERTIES.
8) ALL DEBRIS SHALL BE REMOVED FROM THE SITE, AND NO STOCKPILING ON SITE SHALL BE ALLOWED UNLESS APPROVED BY THE OWNER OR THEIR REPRESENTATIVES.
9) THE CONTRACTOR SHALL LIMIT SAWCUT AND PAVEMENT REMOVAL TO ONLY THOSE AREAS WHERE REQUIRED OR AS SHOWN. ALL PAVEMENTS TO BE REMOVED SHALL BE SAWCUT AND REMOVED TO FULL DEPTH AT ALL PAVEMENT LIMITS OR EXISTING JOINTS. IF ANY DAMAGE IS INCURRED TO ANY OF THE SURROUNDING PAVEMENT, THE CONTRACTOR SHALL BE RESPONSIBLE FOR ITS REMOVAL AND REPAIR AT NO ADDITIONAL COST TO ANYONE ELSE, INCLUDING THE TOWNSHIP OR OWNER.
10) ASPHALT AREAS SHOWN TO BE SAWCUT AND REMOVED FULL DEPTH ARE ACTUAL FACE OF PROPOSED CURBS. IT WILL BE NECESSARY TO MAKE OFF-SET SAWCUTS TO PROVIDE CLEARANCE FOR PROPOSED CURBS. THE CONTRACTOR SHALL DETERMINE THE AMOUNT OF OFF-SET NECESSARY TO CONSTRUCT THE PROPOSED CURBS. ADDITIONAL CUTS MAY BE DESIRED TO FACILITATE THE REMOVAL OF THE EXISTING PAVEMENT, BUT THERE WILL BE NO EXTRA PAYMENT FOR ADDITIONAL CUTS. PAVEMENT SHALL BE REMOVED WITHOUT DAMAGING OR UNDERMINING THE REMAINING PAVEMENT. IF ADJACENT PAVEMENT IS DAMAGED, THE CONTRACTOR SHALL MAKE ADDITIONAL FULL DEPTH SAWCUTS AND REMOVE THE DAMAGE AREAS AS NECESSARY.
11) ALL PAVEMENT REMOVAL AREAS SHALL BE FULL PAVEMENT CROSS-SECTION REMOVAL DOWN TO NATIVE SOIL LAYER IN ACCORDANCE WITH THE GEOTECHNICAL REPORT DATED APRIL 1, 2020.
12) ALL TREES WITHIN THE GRADING LIMITS SHALL BE REMOVED UNLESS OTHERWISE NOTED.

NEDERVELD
www.nederveld.com
800.222.1868
ANN ARBOR
3037 Miller Rd.
Ann Arbor, MI 48103
Phone: 734.929.6963
CHICAGO
COLUMBUS
GRAND RAPIDS
HOLLAND
INDIANAPOLIS
ST. LOUIS

PREPARED FOR:
Dealership Acquisitions
Mark Sims

17408 Edgewater Dr.
Lakewood, OH 44107
Phone: 216.316.0677

REVISIONS:

Title: Site Plan Submittal
Drawn: BC/WL Checked: BC Date: 10.25.2021
Title: Site Plan Resubmittal
Drawn: BC/WL Checked: BC Date: 11.24.2021

3530 JACKSON ROAD

Demolition Plan

3530 Jackson Road
PART OF THE SOUTHEAST 1/4 OF SECTION 23, T2E, R5E, SCIO TOWNSHIP, WASHTENAW COUNTY, MICHIGAN

STAMP:

STATE OF MICHIGAN
JASON L. VAN RYN
ENGINEER
No. 54207
LICENSED PROFESSIONAL ENGINEER

PROJECT NO:
21500178

SHEET NO:
C-203

21500178-CP1.dwg WL 11/24/2021 12:57

© 2021 Nederveld, Inc.

PARKING LEGEND

- (12) CUSTOMER
- (21) EMPLOYEE
- (16) EV CHARGING
- (196) VEHICLE STORAGE

LEGEND

- EXISTING BITUMINOUS
- EXISTING CONCRETE
- PROPOSED BITUMINOUS (STANDARD DUTY)
- PROPOSED BITUMINOUS (HEAVY DUTY)
- PROPOSED CONCRETE (STANDARD DUTY)
- PROPOSED CONCRETE (HEAVY DUTY)

N

0' 15' 30' 60'

SCALE: 1" = 30'

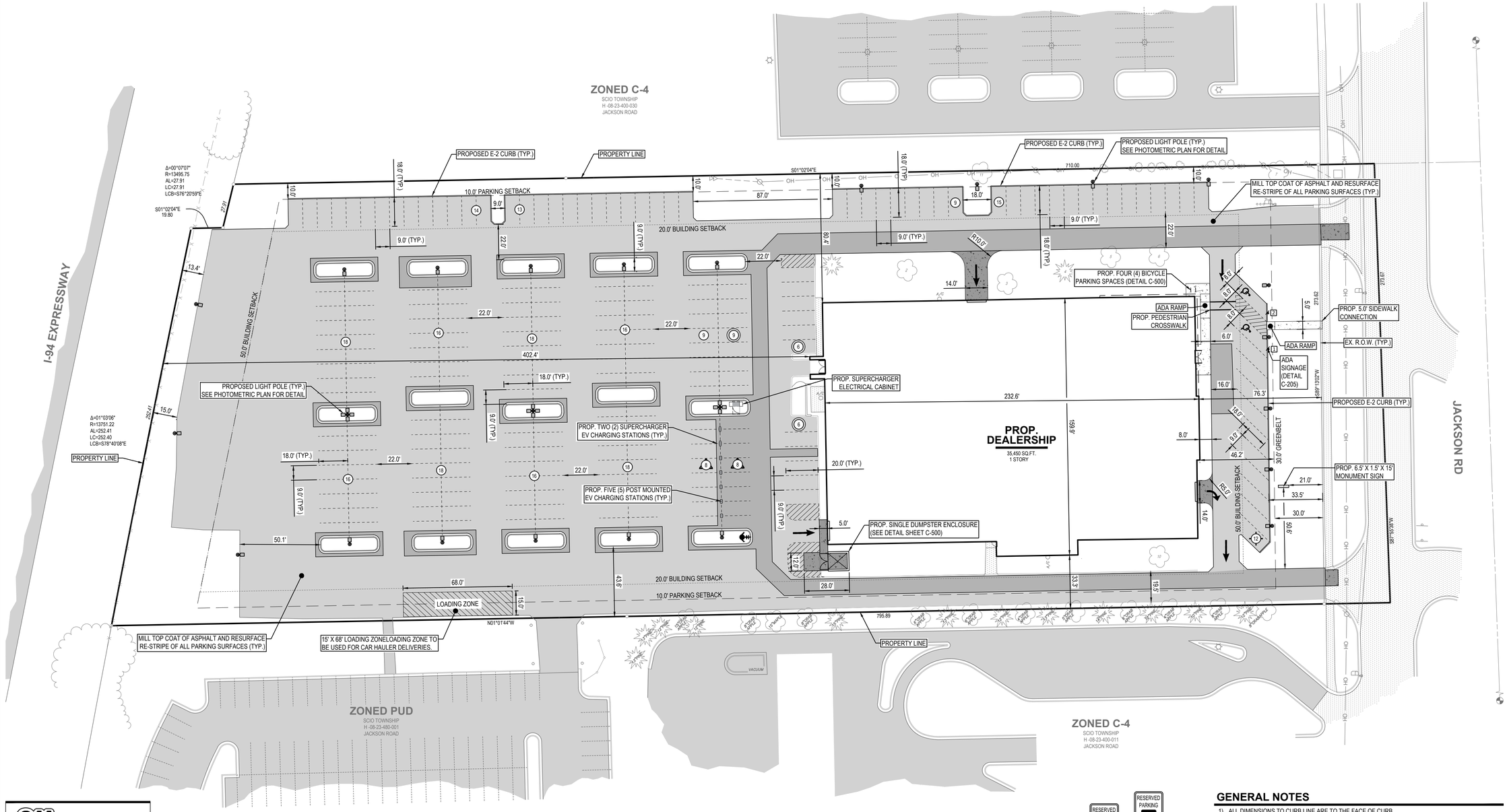

811 Know what's **below.** **CALL** before you dig.

UTILITY LOCATIONS ARE DERIVED FROM ACTUAL MEASUREMENTS OR AVAILABLE RECORDS. THEY SHOULD NOT BE INTERPRETED TO BE EXACT LOCATIONS NOR SHOULD IT BE ASSUMED THAT THEY ARE THE ONLY UTILITIES IN THIS AREA.

NOTE:
EXISTING UTILITIES AND SERVICE LINES IDENTIFIED AS "PLAN" WERE OBTAINED FROM AVAILABLE AS-BUILT RECORD DRAWINGS. THE CONTRACTOR SHALL VERIFY THE LOCATION, DEPTH AND STATUS OF ALL UTILITIES AND SERVICE LINES PRIOR TO NEW CONNECTIONS.

RESERVED PARKING ONLY — R7-8 — 1

RESERVED PARKING ONLY / VAN ACCESSIBLE — R7-8 & R7-8a — 2

NOTE: SIGNS SHALL BE MOUNTED TO A 2" SQUARE STEEL POST

SIGN LEGEND

N.T.S.

GENERAL NOTES

1) ALL DIMENSIONS TO CURB LINE ARE TO THE FACE OF CURB.
2) ALL TRAFFIC CONTROL SHALL BE PER THE LATEST EDITION OF THE M.M.U.T.C.D.
3) MONUMENT SIGN SHALL BE UNDER SEPARATE PERMIT FROM SCIO TWP.

NEDERVELD
www.nederveld.com
800.222.1868
ANN ARBOR
3037 Miller Rd.
Ann Arbor, MI 48103
Phone: 734.929.6963
CHICAGO
COLUMBUS
GRAND RAPIDS
HOLLAND
INDIANAPOLIS
ST. LOUIS

PREPARED FOR:

Dealership Acquisitions
Mark Sims

17408 Edgewater Dr.
Lakewood, OH 44107
Phone: 216.316.0677

REVISIONS:

Title: Site Plan Submittal		
Drawn: BC/WL	Checked: BC	Date: 10.25.2021
Title: Site Plan Resubmittal		
Drawn: BC/WL	Checked: BC	Date: 11.24.2021

3530 JACKSON ROAD

Site Layout Plan

3530 Jackson Road
PART OF THE SOUTHEAST 1/4 OF SECTION 23, T2E, R5E, SCIO TOWNSHIP, WASHTENAW COUNTY, MICHIGAN

STAMP:

STATE OF MICHIGAN
JASON L. VAN RYN
ENGINEER
No. 54207
LICENSED PROFESSIONAL ENGINEER

PROJECT NO:
21500178

SHEET NO:
C-205

21500178-CP1.dwg WL 11/24/2021 12:57

© 2021 Nederveld, Inc.

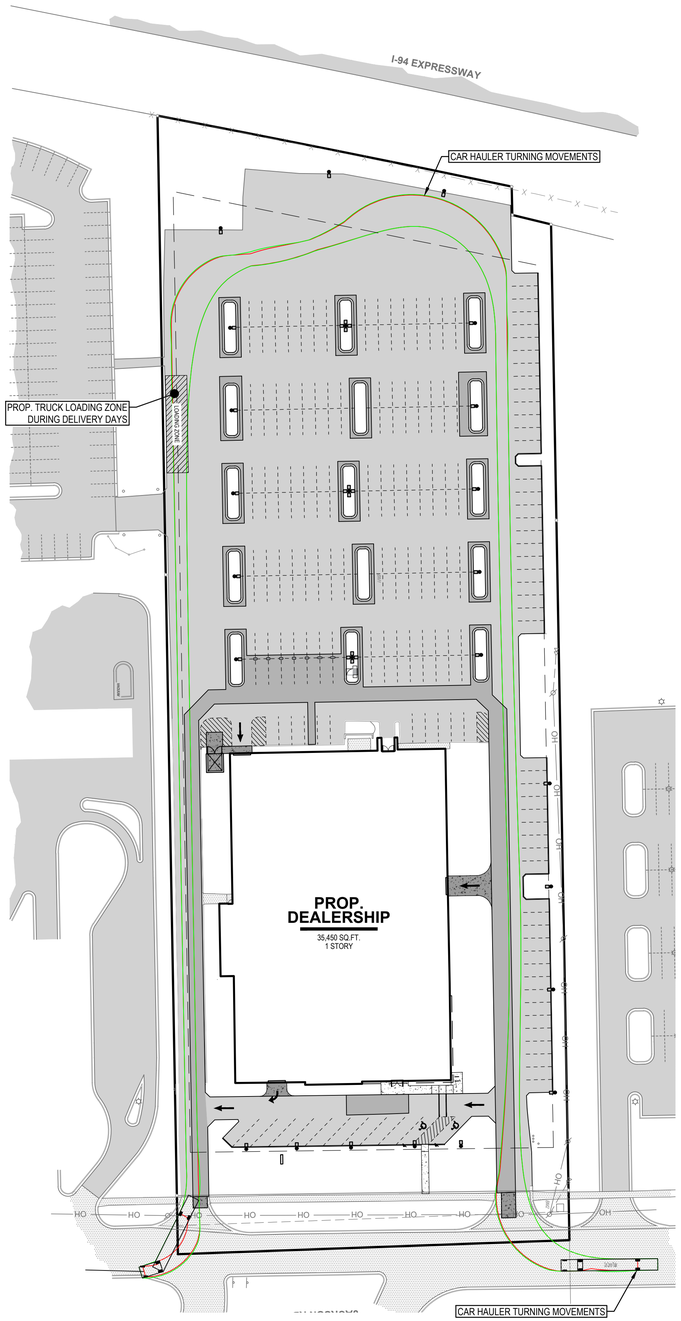

Car Carrier Trailer	
Overall Length	67.499ft
Overall Width	8.000ft
Overall Body Height	13.109ft
Min Body Ground Clearance	0.333ft
Track Width	8.000ft
Lock-to-lock time	4.00s
Curb to Curb Turning Radius	39.900ft

CAR HAULER VEHICLE TURNING PATH

SCALE: 1" = 50'

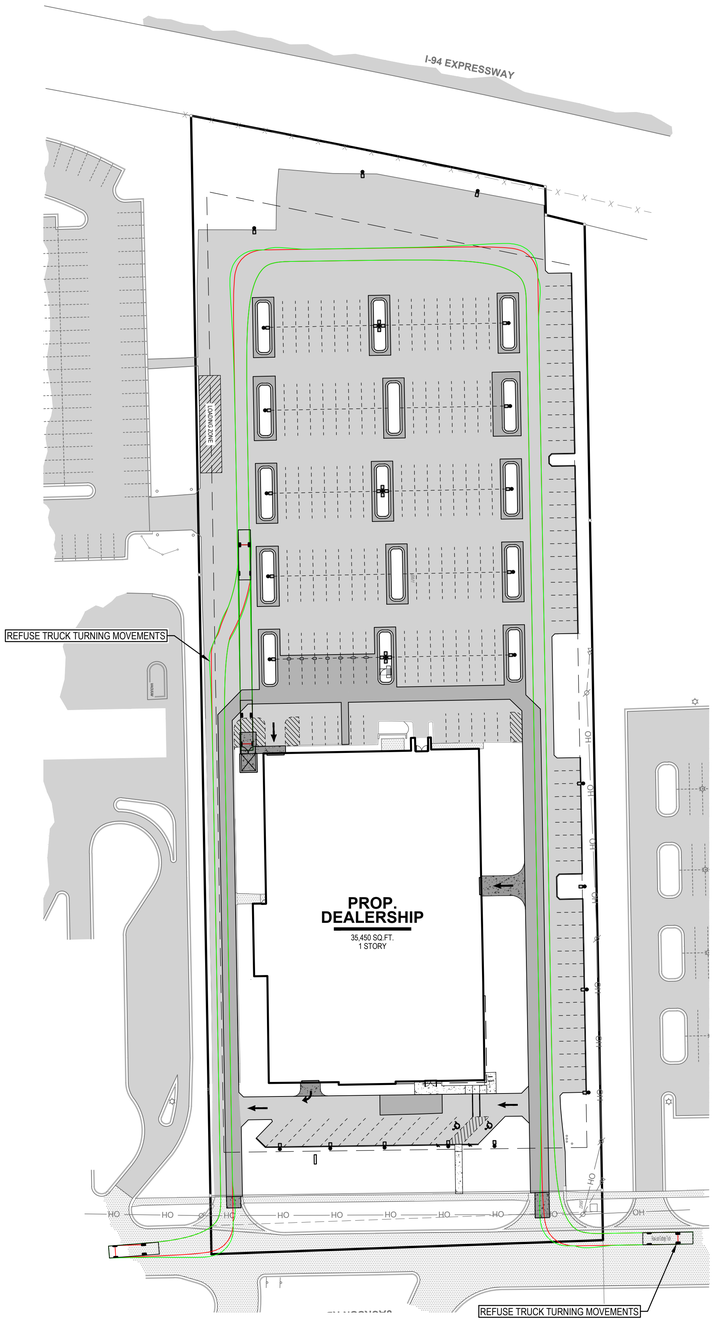

Rear-Load Garbage Truck	
Overall Length	35.000ft
Overall Width	8.375ft
Overall Body Height	10.546ft
Min Body Ground Clearance	1.000ft
Track Width	8.375ft
Lock-to-lock time	6.00s
Curb to Curb Turning Radius	29.300ft

REFUSE TRUCK VEHICLE TURNING PATH

SCALE: 1" = 50'

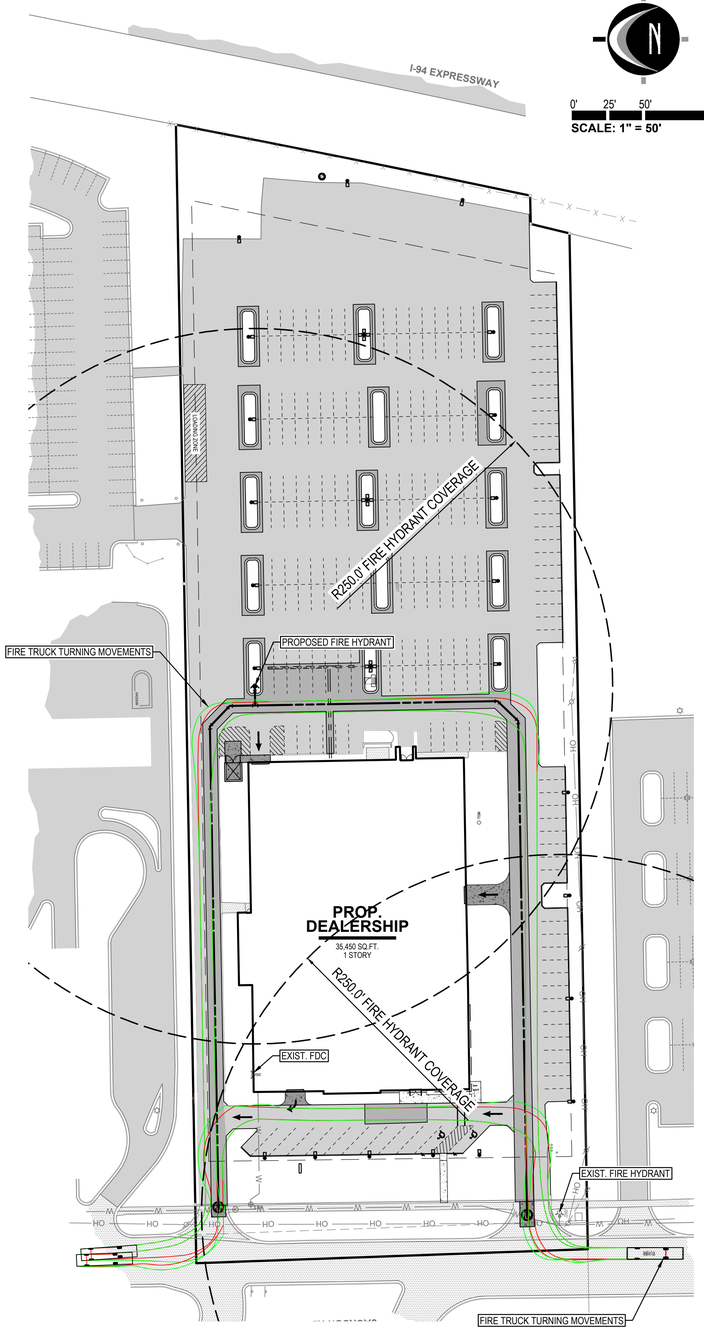

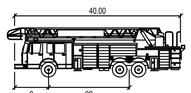

Ladder Truck	feet
Width	: 8.167
Track	: 8.167
Lock to Lock Time	: 5.0
Steering Angle	: 45°

FIRE TRUCK VEHICLE TURNING PATH

SCALE: 1" = 50'

NEDERVELD

www.nederveld.com
800.222.1868

ANN ARBOR
3037 Miller Rd.
Ann Arbor, MI 48103
Phone: 734.929.6963

CHICAGO
COLUMBUS
GRAND RAPIDS
HOLLAND
INDIANAPOLIS
ST. LOUIS

PREPARED FOR:

Dealership Acquisitions
Mark Sims

17408 Edgewater Dr.
Lakewood, OH 44107
Phone: 216.316.0677

REVISIONS:

Title: Site Plan Submittal
Drawn: BC/WL Checked: BC Date: 10.25.2021
Title: Site Plan Resubmittal
Drawn: BC/WL Checked: BC Date: 11.24.2021

3530 JACKSON ROAD

Vehicle Access Plan

3530 Jackson Road

PART OF THE SOUTHEAST 1/4 OF SECTION 23, T2E, R5E, SCIO TOWNSHIP, WASHTENAW COUNTY, MICHIGAN

STAMP:

STATE OF MICHIGAN
JASON L. VAN RYN
ENGINEER
No. 54207
LICENSED PROFESSIONAL ENGINEER

PROJECT NO:
21500178

SHEET NO:
C-206

21500178-CP1.dwg WL 11/24/2021 12:57

© 2021 Nederveld, Inc.

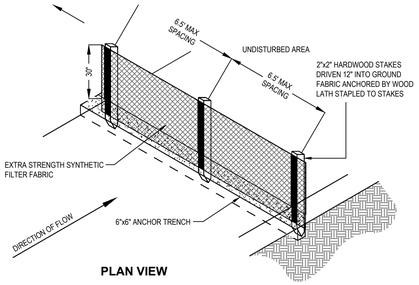

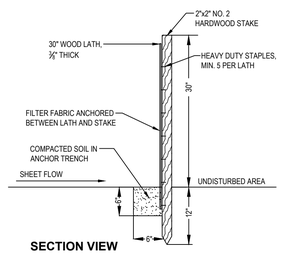

SILT FENCE DETAIL

N.T.S.

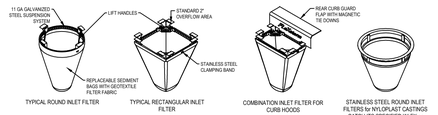

NOTES:
1. ALL FRAMING IS CONSTRUCTED OF CORROSION RESISTANT STEEL (ZINC PLATED OR GALVANIZED) FOR 7 YEAR MINIMUM SERVICE LIFE.
2. UPON ORDERING CONFIRMATION OF THE DOT CALLOUT, PRECAST OR CASTING MAKE AND MODEL, OR DETAILED DIMENSIONAL FORMS MUST BE PROVIDED TO CONFIGURE AND ASSEMBLE YOUR CUSTOMIZED FLEXSTORM INLET FILTER. PART NUMBER ALONE IS NOT SUFFICIENT.
3. FOR WRITTEN SPECIFICATIONS AND MAINTENANCE GUIDELINES VISIT WWW.INLETFILTERS.COM

SPECIFICATIONS FOR STANDARD BAGS BY NOMINAL SIZE			
NORMAL BAG SIZE	SOLIDS STORAGE (CuFt)	FILTERED FLOW RATE AT 50% MAX (CFS)	
		FX (WOVEN)	X, (NONWOVEN)
SMALL	16	12	0.90
MEDIUM	2.10	1.70	1.30
LARGE	3.80	2.70	1.90
XL	4.20	3.60	2.60

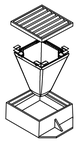

INSTALLATION:
1. REMOVE GRATE
2. DROP FLEXSTORM INLET FILTER ONTO LOAD BEARING LIP OF CASTING OR CONCRETE STRUCTURE
3. REPLACE GRATE

ALL PRODUCTS MANUFACTURED & DESIGNED BY ACF ENVIRONMENTAL PROTECTION, INC A DIVISION OF ACF, INC.
WWW.INLETFILTERS.COM
(866) 287-8555 PH
(630) 355-3477 FX
INFO@INLETFILTERS.COM

FLEXSTORM INLET FILTER DETAIL

N.T.S.

LEGEND

- EX. GRADE CONTOUR
- PROP. GRADE CONTOUR
- PROP. GRADE ELEV.
- PROP. GRADE ELEV. (BLACKTOP)
- PROP. GRADE ELEV. (CONCRETE)
- PROP. GRADE ELEV. (GUTTER)
- PROP. GRADE ELEV. (EDGE OF METAL)
- PROP. GRADE ELEV. (HIGH POINT)
- EX. BITUMINOUS
- EX. CONCRETE
- PROPOSED BITUMINOUS (STANDARD DUTY)
- PROPOSED BITUMINOUS (HEAVY DUTY)
- PROPOSED CONCRETE (STANDARD DUTY)
- PROPOSED CONCRETE (HEAVY DUTY)
- PROP. STORM SEWER
- SILT FENCE
- PROP. LIMITS OF DISTURBANCE

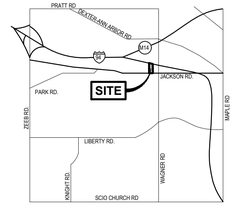

LOCATION MAP

NOT TO SCALE

0' 15' 30' 60'

SCALE: 1" = 30'

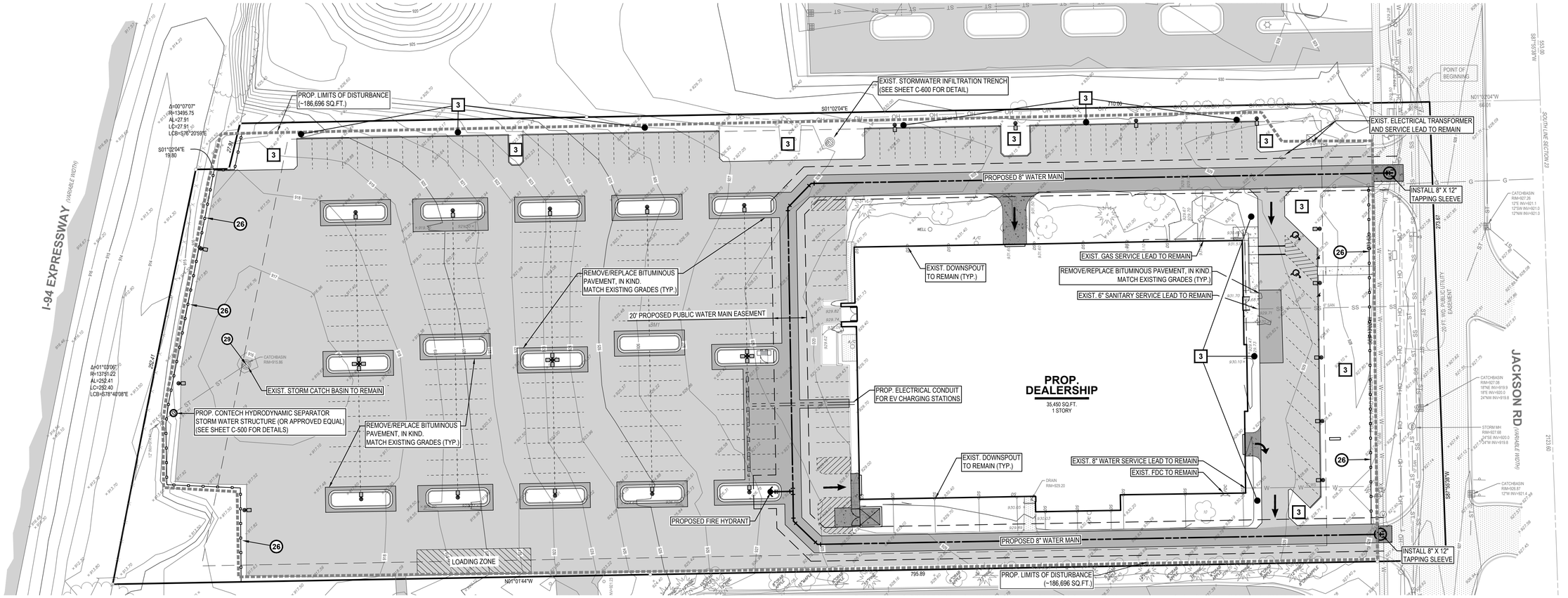

SANITARY SEWER BASIS OF DESIGN

Use the updated City of Ann Arbor "Table A" and "Michigan Criteria for Subsurface Sewage Disposal" Michigan Department of Public Health April 1994 & the "Ten States Standards"

		Quantity of Base Unit	Unit	City of Ann Arbor Table 'A' Type or Use Equivalent	Flow Rate* For Given Use (gpd/unit)	Avgerage Flow (gpd)
Proposed Site: Car Dealership (Table A Designation)						
Uses:	Admin/Employee areas (Non-medical Office Space)	3,810	gsf	Non-medical Office Space	0.06	229
	Customer/Parts/Sales (Retail - no process water)	7,155	gsf	Retail Store(no process water)	0.03	215
	Service Area (General Industrial Space)	23,847	gsf	General Industrial Space	0.04	954
					Total Proposed Flow	**1,397**

*Flow Rate information taken from the updated City of Ann Arbor "Table A"

REU Calculation	
1,397	Average Flow (gpd)
300	1 REU (gpd)
5	REU's required for proposed project (gpd/REU)
10.5	Existing site REU's available
0	**Additional REU's Required**

SITE CONSTRUCTION SEQUENCE & TIMING	2022						
	FEB	MAR	APR	MAY	JUN	JUL	AUG
INSTALL SOIL EROSION CONTROL MEASURES							
DEMOLITION & REMOVALS							
STRIP TOPSOIL & ROUGH GRADE SITE							
CONSTRUCT STORM WATER MANAGEMENT SYSTEM							
FINISH GRADE SITE							
PAVE SITE							
RESPREAD TOPSOIL/COMPACTION							
SEED DISTURBED AREAS							
SITE RESTORATION/CLEAN UP							

SOIL EROSION AND SEDIMENTATION CONTROL NOTES

1) CONTRACTOR SHALL POSSESS THE SOIL EROSION AND SEDIMENTATION CONTROL PERMIT PRIOR TO START OF ANY EARTH WORK.
2) CONTRACTOR SHALL MODIFY THIS SOIL EROSION AND SEDIMENTATION CONTROL PLAN TO SHOW THE ADDITIONAL CONTROL MEASURES INTENDED TO BE USED DURING CONSTRUCTION. SUBMIT MODIFICATIONS TO THE CONTROLLING AGENCY, THE OWNER, AND THE ENGINEER.
3) EROSION PROTECTION SHALL BE PROVIDED AT ALL STORM SEWER INLETS AND OUTLETS. ALL BARE EARTH SHALL BE STABILIZED WITH SEEDING.
4) REFER TO THE M.D.O.T. "SOIL EROSION AND SEDIMENTATION CONTROL MANUAL" (APRIL 2006) FOR ADDITIONAL INFORMATION.
5) THE ENTIRE STORM SEWER SYSTEM SHALL BE CLEANED AND FLUSHED FOLLOWING CONSTRUCTION AND PAID RECEIPT THEREOF PROVIDED TO THE ENGINEER AND COUNTY SESC AGENT PRIOR TO FINAL PAYMENT TO THE CONTRACTOR OR FINAL ACCEPTANCE OF THE CONSTRUCTION BY THE OWNER.
6) THE CONTRACTOR SHALL BE RESPONSIBLE TO INSPECT, TAKE CORRECTIVE ACTION AND MAINTAIN ALL TEMPORARY SESC MEASURES DAILY AND AFTER EACH RAIN EVENT UNIT FINAL COMPLETION AND ACCEPTANCE OF THE PROJECT.

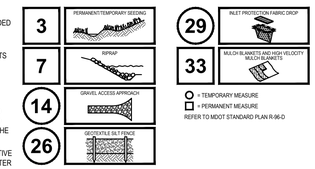

UTILITY CONSTRUCTION NOTES

1. OIL/SEDIMENT INTERCEPTIORS SHALL BE INSTALLED IN THE SERVICE BAY AREAS, INSTALLED UPSTREAM OF SANITARY LEAD. SEE DETAILED ARCHITECTURAL PLANS FOR DETAILS.
2. THE OWNER SHALL BE RESPONSIBLE FOR ALL FUTURE MAINTENANCE OF THE PRIVATE UTILITIES, INCLUDING TREE ROOT REMOVAL.

811 Know what's **below.** **CALL** before you dig.

UTILITY LOCATIONS ARE DERIVED FROM ACTUAL MEASUREMENTS OR AVAILABLE RECORDS. THEY SHOULD NOT BE INTERPRETED TO BE EXACT LOCATIONS NOR SHOULD IT BE ASSUMED THAT THEY ARE THE ONLY UTILITIES IN THIS AREA.

NOTE:
EXISTING UTILITIES AND SERVICE LINES IDENTIFIED AS "(PLAN)" WERE OBTAINED FROM AVAILABLE AS-BUILT RECORD DRAWINGS. THE CONTRACTOR SHALL VERIFY THE LOCATION, DEPTH AND STATUS OF ALL UTILITIES AND SERVICE LINES PRIOR TO NEW CONNECTIONS.

NEDERVELD
www.nederveld.com
800.222.1868
ANN ARBOR
3037 Miller Rd.
Ann Arbor, MI 48103
Phone: 734.929.6963
CHICAGO
COLUMBUS
GRAND RAPIDS
HOLLAND
INDIANAPOLIS
ST. LOUIS

PREPARED FOR:
Dealership Acquisitions
Mark Sims

17408 Edgewater Dr.
Lakewood, OH 44107
Phone: 216.316.0677

REVISIONS:

Title: Site Plan Submittal
Drawn: BC/WL Checked: BC Date: 10.25.2021
Title: Site Plan Resubmittal
Drawn: BC/WL Checked: BC Date: 11.24.2021

3530 JACKSON ROAD

S.E.S.C.& Utility Plan

3530 Jackson Road
PART OF THE SOUTHEAST 1/4 OF SECTION 23, T2E, R5E.
SCIO TOWNSHIP, WASHTENAW COUNTY, MICHIGAN

STAMP:

STATE OF MICHIGAN
JASON L. VAN RYN
ENGINEER
No. 54207
LICENSED PROFESSIONAL ENGINEER

PROJECT NO:
21500178

SHEET NO:
C-300

21500178-CP1.dwg WL 11/24/2021 12:57

© 2021 Nederveld, Inc.

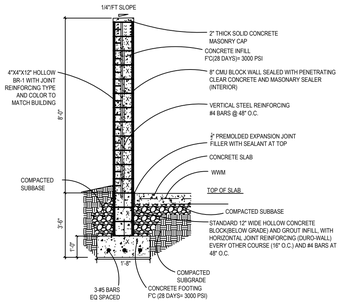

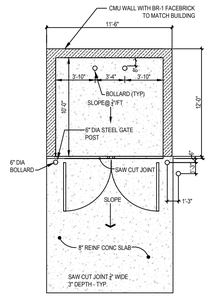

SINGLE DUMPSTER - PLAN VIEW

TRASH ENCLOSURE DETAIL

N.T.S.

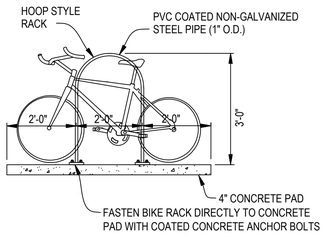

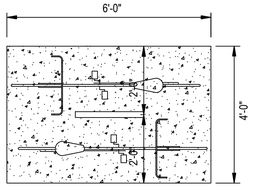

BICYCLE PARKING HOOP DETAIL

N.T.S.

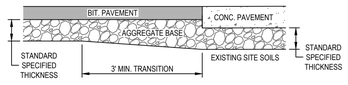

PAVEMENT BASE TRANSITION DETAIL

N.T.S.

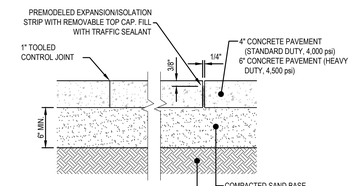

NOTE:
1. LIGHT BROOM FINISH
2. LOCATE CONTROL JOINTS AND EXPANSION JOINTS PER ACI STANDARDS
3. PANEL SIZE SHALL NOT EXCEED 8 FEET
4. PANELS SHALL BE KEPT AS SQUARE AS POSSIBLE WITH THE LENGTH NEVER EXCEEDING 1.25X THE WIDTH
5. 1.0#/CU.YD. FIBER REINFORCEMENT
6. AIR ENTRAINMENT - 6% ± 1%
7. SLUMP 4"±1"

CONCRETE PAVEMENT DETAIL

N.T.S.

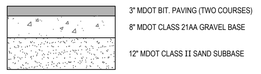

NOTE:
1. REFER TO GEOTECHNICAL REPORT FOR FINAL PAVEMENT DESIGN SPECIFICATION
2. HMA MIXTURE TO BE TIER 1 OR TIER II
3. BINDER GRADE TO BE A MINIMUM OF PG 58-28

STANDARD DUTY BITUMINOUS PAVEMENT CROSS SECTION DETAIL

N.T.S.

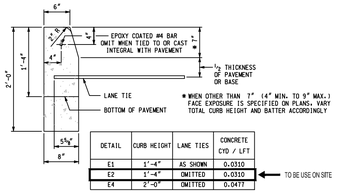

DETAIL	CURB HEIGHT	LANE TIES	CONCRETE CYD / LFT	
E1	1'-4"	AS SHOWN	0.0310	
E2	1'-4"	OMITTED	0.0310	← TO BE USE ON SITE
E4	2'-0"	OMITTED	0.0477	

CONCRETE CURB MDOT DETAIL "E"

N.T.S.

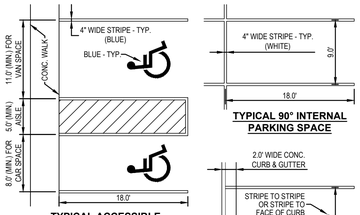

TYPICAL ACCESSIBLE PARKING SPACE

TYPICAL 90° INTERNAL PARKING SPACE

TYPICAL 90° PERIMETER PARKING SPACE

WHEN 4 OR FEWER PARKING SPACES ARE PROVIDED ON SITE, SIGNAGE IDENTIFYING THE VAN-ACCESSIBLE PARKING SPACE IS NOT REQUIRED.
AT LEAST 98" OF VERTICAL CLEARANCE MUST BE PROVIDED FOR VAN PARKING SPACE, ACCESS AISLE AND VEHICULAR ROUTE.
IF THE ACCESSIBLE ROUTE IS LOCATED IN FRONT OF THE PARKING SPACE, INSTALL WHEEL STOPS TO KEEP VEHICLES FROM REDUCING THE CLEAR WIDTH OF THE ACCESSIBLE ROUTE BELOW 36" INCHES
PARKING SPACE AND AISLE TO HAVE A MAXIMUM SLOPE IN ALL DIRECTIONS <2%

NOTE:
APPLY TWO COATS OF VOC COMPLIANT, M.D.O.T. APPROVED, UNDILUTED SOLVENT BASED, OR LATEX TRAFFIC PAINT TO ALL PAVEMENT MARKINGS. USE MANUFACTURERS RECOMMENDED APPLICATION RATE, WITHOUT ADDITION OF THINNER, WITH A MAXIMUM OF 100 SFT PER GALLON, OR MINIMUM 15 MILS WET FILM THICKNESS, AND 7.5 MILS DRY FILM THICKNESS PER COAT, WITH MINIMUM 30 DAYS BETWEEN APPLICATIONS. SECOND COAT MUST NOT BE APPLIED EARLIER THAN 7 DAYS BEFORE OCCUPANCY.

PAVEMENT MARKING DETAILS

N.T.S.

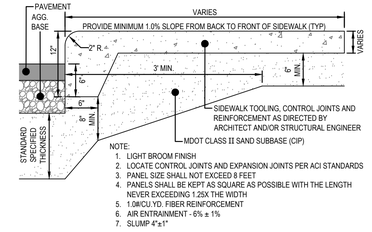

NOTE:
1. LIGHT BROOM FINISH
2. LOCATE CONTROL JOINTS AND EXPANSION JOINTS PER ACI STANDARDS
3. PANEL SIZE SHALL NOT EXCEED 8 FEET
4. PANELS SHALL BE KEPT AS SQUARE AS POSSIBLE WITH THE LENGTH NEVER EXCEEDING 1.25X THE WIDTH
5. 1.0#/CU.YD. FIBER REINFORCEMENT
6. AIR ENTRAINMENT - 6% ± 1%
7. SLUMP 4"±1"

INTEGRAL CURB AND WALK DETAIL

N.T.S.

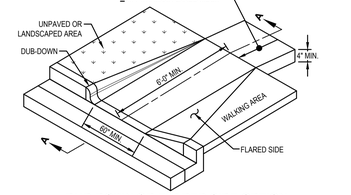

DUB-DOWN OR FLARED SIDE OPTION

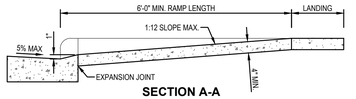

SECTION A-A

SIDEWALK CURB RAMP DETAIL

N.T.S.



PLAN VIEW

SECTION A-A

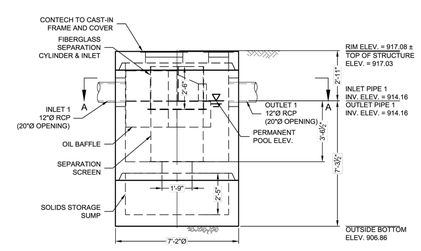

ELEVATION VIEW

MATERIAL LIST (PROVIDED BY CONTECH)

COUNT	DESCRIPTION	INSTALLED BY
1	FIBERGLASS INLET AND CYLINDER	CONTECH
1	2400 micron, 3' O.D. x 3.04' SEP. SCREEN	CONTECH
1	SEALANT FOR JOINTS	CONTRACTOR
1	24"Ø x 4" FRAME & COVER, EJ#41600389, OR EQUIV.	CONTECH
2	12"Ø x 4" FRAME & COVER, EJ#41610201, OR EQUIV.	CONTECH

GENERAL NOTES
1. CONTECH TO PROVIDE ALL MATERIALS UNLESS NOTED OTHERWISE.
2. FOR FABRICATION DRAWINGS WITH DETAILED STRUCTURE DIMENSIONS AND WEIGHT, PLEASE CONTACT YOUR CONTECH ENGINEERED SOLUTIONS LLC REPRESENTATIVE. www.ContechES.com
3. CDS WATER QUALITY STRUCTURE SHALL BE IN ACCORDANCE WITH ALL DESIGN DATA AND INFORMATION CONTAINED IN THIS DRAWING. CONTRACTOR TO CONFIRM STRUCTURE MEETS REQUIREMENTS OF PROJECT.
4. STRUCTURE SHALL MEET AASHTO HS-20 LOAD RATING, ASSUMING EARTH COVER OF 0' - 2', AND GROUNDWATER ELEVATION AT, OR BELOW, THE OUTLET PIPE INVERT ELEVATION. ENGINEER OF RECORD TO CONFIRM ACTUAL GROUNDWATER ELEVATION. CASTINGS SHALL MEET AASHTO M306 AND BE CAST WITH THE CONTECH LOGO.
5. IF REQUIRED, PVC HYDRAULIC SHEAR PLATE IS PLACED ON SHELF AT BOTTOM OF SCREEN CYLINDER. REMOVE AND REPLACE AS NECESSARY DURING MAINTENANCE CLEANING.
6. CDS STRUCTURE SHALL BE PRECAST CONCRETE CONFORMING TO ASTM C-478 AND AASHTO LOAD FACTOR DESIGN METHOD.

INSTALLATION NOTES
A. ANY SUB-BASE, BACKFILL DEPTH, AND/OR ANTI-FLOTATION PROVISIONS ARE SITE-SPECIFIC DESIGN CONSIDERATIONS AND SHALL BE SPECIFIED BY ENGINEER OF RECORD.
B. CONTRACTOR TO PROVIDE EQUIPMENT WITH SUFFICIENT LIFTING AND REACH CAPACITY TO LIFT AND SET THE CDS MANHOLE STRUCTURE.
C. CONTRACTOR TO INSTALL JOINT SEALANT BETWEEN ALL STRUCTURE SECTIONS AND ASSEMBLE STRUCTURE.
D. CONTRACTOR TO PROVIDE, INSTALL, AND GROUT INLET AND OUTLET PIPE(S). MATCH PIPE INVERTS WITH ELEVATIONS SHOWN. ALL PIPE CENTERLINES TO MATCH PIPE OPENING CENTERLINES.
E. CONTRACTOR TO TAKE APPROPRIATE MEASURES TO ASSURE UNIT IS WATER TIGHT, HOLDING WATER TO FLOWLINE INVERT MINIMUM. IT IS SUGGESTED THAT ALL JOINTS BELOW PIPE INVERTS ARE GROUTED.

STRUCTURE WEIGHT
APPROXIMATE HEAVIEST PICK = 15000 LBS.
STRUCTURE IS DELIVERED IN 3 PIECES

MAX FOOTPRINT = Ø7'-2"

CONTECH
PROPOSAL
DRAWING

NCI
LAYOUT 1A
3030-6-FGIS
5824 / 453502

The design and information shown on this drawing is the property of CONTECH Engineered Solutions LLC. The reproduction or utilization of this drawing in whole or in part, is forbidden without the expressed written consent of CONTECH. Any electronic or printed copy of this design or drawing is an unverified copy. Verification is the responsibility of the user. CONTECH makes no representations as to the accuracy or completeness of this copy. The user agrees to hold CONTECH harmless from any claim arising from the use of this design or drawing, including, but not limited to, claims caused by errors, omissions or differences between this copy and the original.

MARK	DATE	REVISION DESCRIPTION	BY

CDS3030-6-C - 692121-10
3530 JACKSON ROAD
SCIO TOWNSHIP, MI
WQU

CONTECH ENGINEERED SOLUTIONS LLC
www.ContechES.com
800.338.1122 513.645.7000 513.645.7993 Fax
9025 Centre Pointe Drive, Suite 400, West Chester, OH 45069

CDS® Patented and Non-Patented Technologies
U.S. Patent Nos. 5,322,629; 5,707,527; 5,759,415; 6,027,639; 6,350,374; 6,406,218; 6,641,720; 6,511,595; 6,649,048; 6,991,114; 7,186,333; 7,296,692; 7,297,266; 7,390,410; 7,425,262; 7,470,366; 7,563,363; 7,857,966; 8,287,728; 8,431,008; 8,470,173; 8,512,561; 8,673,157; 8,741,151; 8,790,515; 8,894,858; 9,039,897; 9,095,792; 9,199,184; 9,266,045; 9,352,263; 9,352,264; 9,352,265; 9,352,266; 9,352,267; 9,352,268; 9,352,269; 9,352,270; 9,352,271; 9,352,272; 9,352,273; 9,352,274; 9,352,275; 9,352,276; 9,352,277; 9,352,278; 9,352,279; 9,352,280; 9,352,281; 9,352,282; 9,352,283; 9,352,284; 9,352,285; 9,352,286; 9,352,287; 9,352,288; 9,352,289; 9,352,290; 9,352,291; 9,352,292; 9,352,293; 9,352,294; 9,352,295; 9,352,296; 9,352,297; 9,352,298; 9,352,299; 9,352,300; 9,352,301; 9,352,302;

PLANT SCHEDULE

TREES	CODE	BOTANICAL / COMMON NAME	SIZE	CAL	SIZE	QTY
	IP - Ay	Acer miyabei 'Morton' TM / State Street Miyabe Maple	B&B	2.5" min.		3
	IP - Am	Acer saccharum 'PNI 0285' TM / Green Mountain Sugar Maple	B&B	2.5" min.		4
	GB - Aa	Acer x freemanii 'Armstrong' / Armstrong Freeman Maple	B&B	2.5" min.		2
	GB - As	Amelanchier laevis 'JFS-Arb' TM / Spring Flurry Allegheny Serviceberry Single Stem	B&B	1.75" min.		3
	IP - Ca	Carpinus caroliniana / American Hornbeam	B&B	2.5" min.		7
	GB - Cc	Cercis canadensis / Eastern Redbud Single Stem	B&B	1.75" min.		2
	GB - Gf	Ginkgo biloba 'Fastigiata' / Fastigiate Maidenhair Tree	B&B	2.5" min.		1
	F - Gf	Ginkgo biloba 'Fastigiata' / Fastigiate Maidenhair Tree	B&B	2.5" min.		3
	PP - Jh	Juniperus chinensis 'Hetzii Columnaris' / Hetzi Column Juniper	B&B		6' hgt. avg.	6
	F - Ls	Liquidambar styraciflua 'Slender Silhouette' / Slender Silhouette Sweet Gum	B&B	2.5" min.		3
	PP - Ma	Maackia amurensis / Amur Maackia	B&B	1.75" min.		1
	F - Ma	Maackia amurensis / Amur Maackia	B&B	1.75" min.		1
	GB - Ov	Ostrya virginiana / American Hophornbeam	B&B	2.5" min.		1
	IP - Ov	Ostrya virginiana / American Hophornbeam	B&B	2.5" min.		3
	M - Ps	Pinus strobus / White Pine	B&B		6' hgt. avg.	1
	IP - Qb	Quercus bicolor / Swamp White Oak	B&B	2.5" min.		2
	IP - Qm	Quercus macrocarpa / Burr Oak	B&B	2.5" min.		3
	IP - Uf	Ulmus carpinifolia x parvifolia 'Frontier' / Frontier Elm	B&B	2.5" min.		2
	IP - Zg	Zelkova serrata 'Green Vase' / Green Vase Sawleaf Zelkova	B&B	2.5" min.		7

SHRUBS	CODE	BOTANICAL / COMMON NAME	SIZE	
	F - Aa	Aronia arbutifolia 'Brilliantissima' / Brilliant Red Chokeberry	24" min.	7
	F - Ag	Aronia melanocarpa 'UCONNAM012' TM / Ground Hug Black Chokeberry	2 gal.	7
	GB - Ab	Aronia melanocarpa 'UCONNAM166' TM / Low Scape Hedger Black Chokeberry	24" min.	22
	PP - Ab	Aronia melanocarpa 'UCONNAM166' TM / Low Scape Hedger Black Chokeberry	24" min.	12
	F - Dc	Deutzia gracilis 'Chardonnay Pearls' TM / Chardonnay Pearls Deutzia	18-24" ht.	8
	F - Px	Diervilla x 'G2X885411' TM / Kodiak Red Diervilla	18-24" ht.	16
	GB - Hl	Hydrangea paniculata 'Jane' TM / Little Lime Panicle Hydrangea	24" min.	12
	PP - Hl	Hydrangea paniculata 'Jane' TM / Little Lime Panicle Hydrangea	24" min.	3
	F - Hf	Hydrangea paniculata 'SMHPFL' TM / Fire Light Panicle Hydrangea	24" min.	5
	Ju	Juniperus virginiana 'FARROWJVBF' TM / Aquavita Juniper	24-30" ht.	3
	PP - Jn	Juniperus virginiana 'Greguard' TM / Grey Guardian Eastern Redcedar	24" min.	3
	GB - Jn	Juniperus virginiana 'Greguard' TM / Grey Guardian Eastern Redcedar	24" min.	14
	F - Jo	Juniperus virginiana 'Grey Owl' / Grey Owl Eastern Redcedar	24" min.	6
	Ph	Panicum virgatum 'Heavy Metal' / Heavy Metal Switch Grass	3 gal.	5
	PP - St	Spiraea betulifolia 'Tor Gold' TM / Glow Girl Birchleaf Spirea	18-24" ht.	28
	GB - St	Spiraea betulifolia 'Tor Gold' TM / Glow Girl Birchleaf Spirea	18-24" ht.	6
	F - Sb	Syringa x 'SMSJBP3' TM / Bloomerang Dark Purple Lilac	24" min.	7
	F - Ws	Weigela florida 'Bokraspiwi' TM / Spilled Wine Weigela	18-24" ht.	20

TREE SURVEY

TAG	COMMON NAME	SCIENTIFIC NAME	DBH	CONDITION	LANDMARK	INVASIVE	REMOVE
1	COLORADO BLUE SPRUCE	*Picea pungens*	16	FAIR			
2	SUGAR MAPLE	*Acer saccharum*	16	GOOD			
3	BRADFORD PEAR	*Pyrus calleryana*	10	GOOD			
4	COLORADO BLUE SPRUCE	*Picea pungens*	15	FAIR			
5	CRABAPPLE	*Malus spp*	18	GOOD	X		
6	CRABAPPLE	*Malus spp*	18	GOOD	X		
7	SUGAR MAPLE	*Acer saccharum*	8	FAIR			
8	COLORADO BLUE SPRUCE	*Picea pungens*	17	GOOD			X
9	COLORADO BLUE SPRUCE	*Picea pungens*	16	GOOD			X
10	APPLE	*Malus spp*	13	GOOD			
11	SILVER MAPLE	*Acer saccharinum*	12	GOOD			
	TOTAL EXISTING DBH =		159		TOTAL REMOVED DBH =		33

LANDSCAPE CALCULATIONS LEGEND

IP - INTERIOR PARKING
PP - PERIMETER PARKING
GB - GREENBELT
F - FOUNDATION
M - MITIGATION

LANDSCAPE NOTES

PLANTING NOTES:

1) ALL PLANT MATERIAL SHALL BE LOCALLY NURSERY GROWN NO.1 GRADE AND INSTALLED ACCORDING TO ACCEPTED PLANTING PROCEDURES. ALL PLANT MATERIALS SHALL MEET CURRENT AMERICAN ASSOCIATION OF NURSERYMEN STANDARDS. DO NOT PLANT MATERIALS UNTIL DIRECTED BY OWNER, LANDSCAPE ARCHITECT, AND/OR CONSTRUCTION MANAGER. THE LANDSCAPE ARCHITECT RESERVES THE RIGHT TO REJECT ANY PLANT MATERIAL, FOR ANY REASON BEFORE OR AFTER IT IS INSTALLED.
2) SIZES SPECIFIED ARE MINIMUM SIZES TO WHICH THE PLANTS ARE TO BE INSTALLED.
3) ANY PLANT SUBSTITUTIONS SHALL BE APPROVED BY THE LANDSCAPE ARCHITECT.
4) MAINTENANCE OF LANDSCAPING ITEMS, TREES, AND PLANTS SHALL BE PERFORMED BY THE PROPERTY OWNER OR A QUALIFIED PROFESSIONAL. ALL LANDSCAPING SHALL BE INSTALLED AND MAINTAINED IN ACCORDANCE WITH APPLICABLE MUNICIPAL STANDARDS AND IN ACCORDANCE WITH CURRENT INDUSTRY STANDARDS IN A NEAT, HEALTHY AND WEED FREE CONDITION. ANY DEAD, DISEASED OR DAMAGED PLANT MATERIALS ARE TO BE REPLACED IMMEDIATELY AFTER NOTIFIED TO DO SO.
5) PLANT TREES AND SHRUBS IN ACCORDANCE WITH PLANTING DETAILS. DIG TREE PITS PER DETAILS. PLANT TREES AND SHRUBS AT THE SAME GRADE LEVEL AT WHICH THEY WERE GROWN AT THE NURSERY. IF HEAVY CLAY SOILS ARE EVIDENT, PLANT TREES AND SHRUBS HIGHER, APPROX. 1/4 OF THE ROOT BALL ABOVE GRADE, AND BACKFILL TO TOP OF ROOT BALL.
6) REMOVE ALL TWINE, WIRE, NURSERY TREE GUARDS, TAGS AND INORGANIC MATERIAL FROM ROOT BALLS. REMOVE THE TOP 1/3 OF BURLAP FROM EARTH BALLS AND REMOVE BURLAP FROM AROUND TRUNK.
7) FINELY SHREDDED HARDWOOD BARK MULCH, NATURAL COLOR (NON-COLORED), IS REQUIRED FOR ALL PLANTINGS AND PLANTING BEDS. MULCH PER PLANTING DETAILS. MULCH IN PLANT BEDS SHALL BE 3" THICK AT TIME OF INSPECTION AND AFTER COMPACTED BY RAIN OR IRRIGATION. ALL PLANTING BEDS SHALL BE EDGED WITH 6" X 12 GAUGE STEEL LANDSCAPE EDGING.
8) LANDSCAPE CONTRACTOR SHALL BE RESPONSIBLE FOR THE VERIFICATION OF ALL UNDERGROUND AND OVERHEAD UTILITIES. IF A CONFLICT WITH UTILITIES EXIST, NOTIFY OWNER/CONSTRUCTION MANAGER PRIOR TO PLANTING.
9) PLANT MATERIAL SHALL BE GUARANTEED FOR ONE YEAR AFTER PLANTING AND ACCEPTANCE.

TOPSOIL AND TURF NOTES:

1) WHEREVER GROUND IN ITS NATURAL STATE HAS BEEN DISTURBED, APPROVED LANDSCAPING OR GRASS SHALL BE FULLY INSTALLED, AND ESTABLISHED WITHIN A REASONABLE PERIOD OF TIME, BUT NO LONGER THAN ONE GROWING SEASON (UNLESS OTHERWISE NOTED AND APPROVED).
2) DURING EXCAVATION, GRADING, AND INSTALLATION OF REQUIRED LANDSCAPING, ALL SOIL EROSION AND SEDIMENTATION CONTROL REGULATIONS SHALL BE STRICTLY FOLLOWED AND COMPLIED WITH.
3) ALL LAWN AREAS SHALL RECEIVE SOD OR HYDROSEED. TURF SHALL BE INSTALLED ON TOPSOIL UNLESS APPROVED OTHERWISE. DO NOT PLANT UNTIL ACCEPTANCE OF FINISH GRADE.
3) SOD SHALL BE GROWN ON TOPSOIL UNLESS APPROVED OTHERWISE. SOD SHALL BE 2 YEARS OLD AND STRONGLY ROOTED. PLACE SOD TIGHTLY WITH NO GAPS AND WITH GRAIN IN SAME DIRECTION. SEAMS OF SOD SHALL BE STAGGERED IN A RUNNING BOND PATTERN. SOD SHALL BE WATERED IMMEDIATELY TO AVOID DRYING OUT. DO NOT INSTALL SOD UNTIL ACCEPTANCE OF FINISH GRADE AND IRRIGATION SYSTEM IS OPERATING PROPERLY UNLESS DIRECTED IN WRITING TO DO OTHERWISE. FINISH ROLL SOD WITH A WATER FILLED LAWN ROLLER, ROLL PERPENDICULAR TO LENGTH OF SOD.
4) TURF SHALL BE INSTALLED ON A MIN. OF 3"-4" OF LIGHTLY COMPACTED APPROVED TOPSOIL. TOPSOIL SHALL BE FERTILE, SCREENED, FRIABLE TOPSOIL FREE OF STONES 1/2" IN DIA. AND LARGER, ROOTS, STICKS, OR OTHER EXTRANEOUS MATERIAL INCLUDING NOXIOUS PLANTS. PH BETWEEN 6.0 AND 6.5, SALTS 500 PARTS PPM, ORGANIC CONTENT 3% MIN. DO NOT INSTALL TOPSOIL UNTIL APPROVED BY OWNER/C.M.. TOPSOIL SHALL BE FINE GRADED TO A SMOOTH FINISH, FREE OF LUMPS AND DEPRESSIONS.
5) ALL LANDSCAPE ISLANDS WITHIN PARKING LOTS SHALL BE BACK FILLED WITH TOPSOIL TO A DEPTH OF 18" MIN.

IRRIGATION NOTES:

1) ALL PLANTING AREAS, LAWN AREAS AND LANDSCAPE ISLANDS SHOWN ARE TO HAVE A COMPLETE IRRIGATION SYSTEM. THE G.C. SHALL BE RESPONSIBLE FOR RETAINING A QUALIFIED FIRM FOR THE DESIGN OF THE IRRIGATION SYSTEM. THE DESIGN MUST SHOW HOW THE SYSTEM TIES INTO THE BUILDING AND MUST SHOW ALL OF THE NECESSARY EQUIPMENT FOR A COMPLETE SYSTEM. THE G.C. SHALL SUBMIT THE IRRIGATION SYSTEM DESIGN TO THE ARCHITECT/OWNER FOR APPROVAL PRIOR TO COMMENCEMENT OF WORK.

LANDSCAPE CALCULATIONS

SEC. 36-345(4) PARKING LOT LANDSCAPING:

- **INTERIOR**: THERE SHALL BE ONE CANOPY TREE MEETING THE MINIMUM SIZE SET REQUIREMENTS SET FORTH IN SUBSECTION (b) (11) OF THIS SECTION FOR EVERY EIGHT PARKING SPACES.
  REQUIRED: 245 PARKING SPACES / 8 SPACES = 30.625 CANOPY TREES
  PROVIDED: 31 CANOPY TREES (IP)

- **PERIMETER**: FOR PARKING VISIBLE FROM PUBLIC ROAD, A BERM SHALL BE PLANTED WITH A MINIMUM OF ONE DECIDUOUS OR EVERGREEN TREE AND SIX DECIDUOUS OR EVERGREEN SHRUBS, FOR EVERY 30 LINEAL FEET (SOLID HEDGE OR WALL CAN BE PROPOSED IN LIEU OF BERM).
  REQUIRED: 230 LF / 30 LF = 7.67 DECIDUOUS/EVERGREEN TREES + 46 DECIDUOUS/EVERGREEN SHRUBS
  PROVIDED: 7 PROPOSED TREES (PP) + 1 EXISTING TREE (#7) + 46 SHRUBS (PP)

SEC. 36-345(5) FRONT GREENBELT LANDSCAPING:

- "A MINIMUM OF ONE DECIDUOUS TREE OR ONE EVERGREEN TREE, PLUS SIX DECIDUOUS AND/OR EVERGREEN SHRUBS FOR EACH 30 LINEAL FEET OF FRONTAGE ABUTTING.
  REQUIRED: 273 LF / 30 LF = 9 DECIDUOUS/EVERGREEN TREES + 54 DECIDUOUS/EVERGREEN SHRUBS
  PROVIDED: *9 TREES (GB) + 54 SHRUBS (GB)

SEC. 36-345(7) FOUNDATION LANDSCAPING:

- "A MINIMUM OF ONE ORNAMENTAL TREE AND SIX SHRUBS FOR EACH 30 LINEAL FEET OF APPLICABLE BUILDING FRONTAGE
  REQUIRED: 381 LF / 30 LF = 12.7 ORNAMENTAL TREES AND 76.2 SHRUBS
  PROVIDED: 13 TREES (7 ORNAMENTAL (F) AND 6 EXISTING-1,2,3,4,5,6) AND 76 SHRUBS (F)

SEC. 36-345(8) GENERAL SITE LANDSCAPING:

- IN ADDITION TO ANY REQUIRED SCREENING, FRONT GREENBELT, FOUNDATION LANDSCAPING AND/OR PARKING LOT LANDSCAPING REQUIRED BY THIS SECTION, 25 PERCENT OF THE SITE AREA, EXCLUDING EXISTING PUBLIC ROAD RIGHT-OF-WAY, OR PRIVATE ROAD EASEMENT SHALL BE LANDSCAPED.
  REQUIRED: 197,875 SF (TOTAL AREA) x 0.25 = 49,469 SF
  EXISTING: 34,168 SF (17 %)
  PROVIDED: 41,083 SF (21 %)

SEC. 36-346(e) TREE & WOODLAND PRESERVATION:

- EVERY SIX INCHES DBH OF PROTECTED TREES REMOVED IN EXCESS OF 20 PERCENT OF THE TOTAL DBH INCHES, ONE TREE (WITH A MINIMUM OF 2.5-INCH CALIPER FOR DECIDUOUS OR SIX FEET IN HEIGHT FOR CONIFEROUS) SHALL BE PLANTED ON THE PARCEL.
  REQUIRED: PROTECTED TREES = 159 DBH INCHES. TREES TO BE REMOVED = 33 DBH INCHES (10,11)
  159(20%) = 31.8 DBH INCHES OF REMOVAL ALLOWED WITHOUT REPLACEMENT
  33 DBH - 31.8 DBH = 1.2 DBH INCHES OF REQUIRED REPLACEMENT
  1.2 / 6 = 0.2 REPLACEMENT TREES
  PROVIDED: 1 REPLACEMENT TREE (M)

- LANDMARK TREE REPLACEMENT. FOR EVERY TWO INCHES DBH OF LANDMARK TREES REMOVED, ONE INCH DBH OF REPLACEMENT TREES SHALL BE PLANTED ON THE PARCEL, EACH OF WHICH REPLACEMENT TREES SHALL HAVE A 2.5-INCH MINIMUM CALIPER.
  REQUIRED: NO LANDMARK TREES REMOVED
  PROVIDED: N/A

*AT LEAST ONE-HALF OF THE TREES REQUIRED IN THE GREENBELT LANDSCAPE SECTION OF THIS CHAPTER SHALL BE CONSIDERED STREET TREES AND SHALL BE PLANTED WITHIN THE JACKSON ROAD R.O.W. A MINIMUM OF FIVE FEET FROM THE EDGE OF THE SIDEWALK.

TYPICAL SHRUB / PERENNIAL / ORNAMENTAL GRASS PLANTING DETAIL

N.T.S.

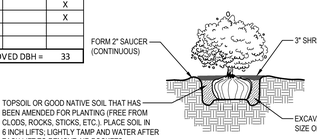

TYPICAL EVERGREEN TREE PLANTING DETAIL

N.T.S.

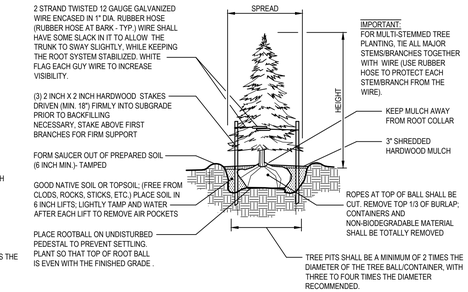

TYPICAL TREE PLANTING DETAIL

N.T.S.

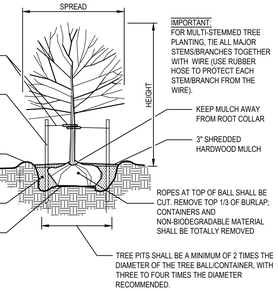

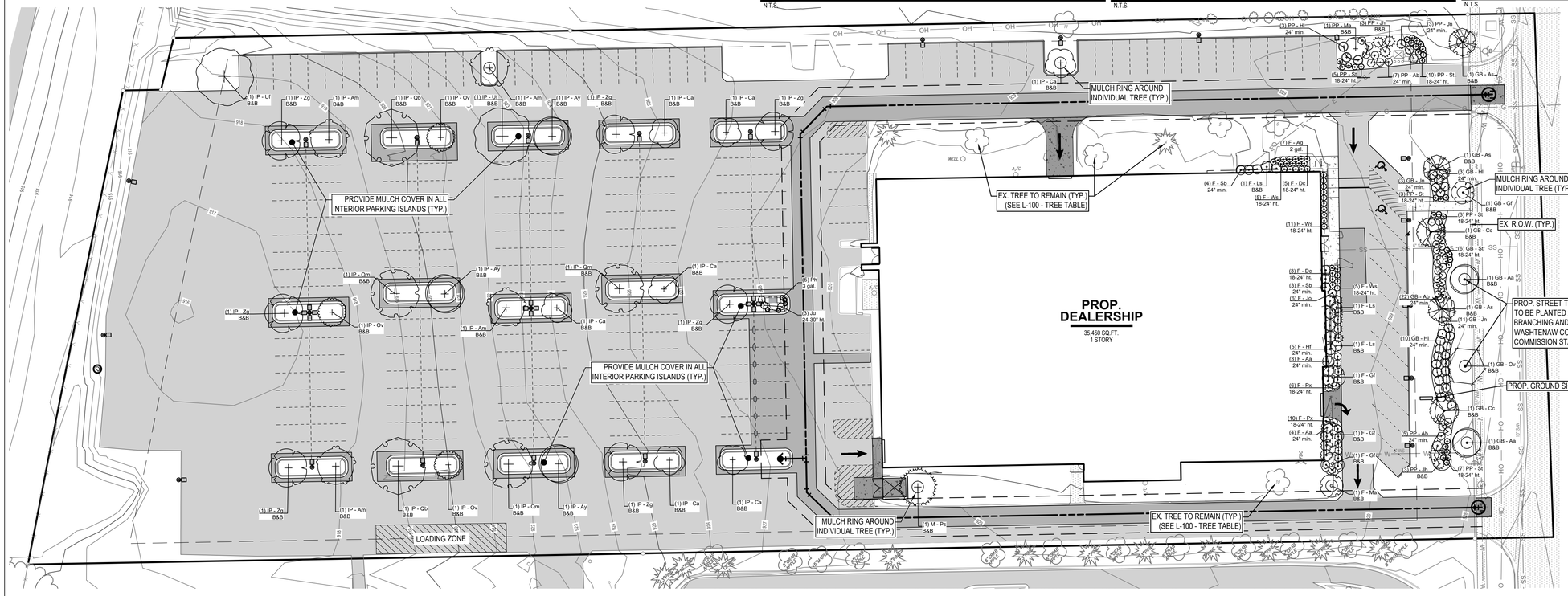

LEGEND

- EXISTING BITUMINOUS
- EXISTING CONCRETE
- PROPOSED BITUMINOUS (STANDARD DUTY)
- PROPOSED BITUMINOUS (HEAVY DUTY)
- PROPOSED CONCRETE (STANDARD DUTY)
- PROPOSED CONCRETE (HEAVY DUTY)

0' 15' 30' 60'
SCALE: 1" = 30'

811 Know what's below. CALL before you dig.

UTILITY LOCATIONS ARE DERIVED FROM ACTUAL MEASUREMENTS OR AVAILABLE RECORDS. THEY SHOULD NOT BE INTERPRETED TO BE EXACT LOCATIONS NOR SHOULD IT BE ASSUMED THAT THEY ARE THE ONLY UTILITIES IN THIS AREA.

NOTE:
EXISTING UTILITIES AND SERVICE LINES IDENTIFIED AS "(PLAN)" WERE OBTAINED FROM AVAILABLE AS-BUILT RECORD DRAWINGS. THE CONTRACTOR SHALL VERIFY THE LOCATION, DEPTH AND STATUS OF ALL UTILITIES AND SERVICE LINES PRIOR TO NEW CONNECTIONS.

NEDERVELD
www.nederveld.com
800.222.1868
ANN ARBOR
3037 Miller Rd.
Ann Arbor, MI 48103
Phone: 734.929.6963
CHICAGO
COLUMBUS
GRAND RAPIDS
HOLLAND
INDIANAPOLIS
ST. LOUIS

PREPARED FOR:
Dealership Acquisitions
Mark Sims

17408 Edgewater Dr.
Lakewood, OH 44107
Phone: 216.316.0677

REVISIONS:

Title: Site Plan Submittal
Drawn: BC/WL Checked: BC Date: 10.25.2021
Title: Site Plan Resubmittal
Drawn: BC/WL Checked: BC Date: 11.24.2021

3530 JACKSON ROAD

Landscape Plan

3530 Jackson Road
PART OF THE SOUTHEAST 1/4 OF SECTION 23, T2E, R5E, SCIO TOWNSHIP, WASHTENAW COUNTY, MICHIGAN

STAMP:
STATE OF MICHIGAN
JAMES C. WALTER, JR.
LANDSCAPE ARCHITECT
No. 1588
REGISTERED LANDSCAPE ARCHITECT

PROJECT NO:
21500178

SHEET NO:
L-100

21500178-CPI.dwg WL 11/24/2021 12:57

© 2021 Nederveld, Inc.

THE UNDERGROUND UTILITIES SHOWN HAVE BEEN LOCATED FROM FIELD SURVEY INFORMATION AND EXISTING RECORDS. THE SURVEYOR MAKES NO GUARANTEES THAT THE UNDERGROUND UTILITIES SHOWN COMPRISE ALL SUCH UTILITIES IN THE AREA, EITHER IN-SERVICE OR ABANDONED. THE SURVEYOR FURTHER DOES NOT WARRANT THAT THE UNDERGROUND UTILITIES SHOWN ARE IN THE EXACT LOCATION INDICATED ALTHOUGH THE SURVEYOR DOES CERTIFY THAT THEY ARE LOCATED AS ACCURATELY AS POSSIBLE FROM INFORMATION AVAILABLE. THE SURVEYOR HAS NOT PHYSICALLY LOCATED THE UNDERGROUND UTILITIES.

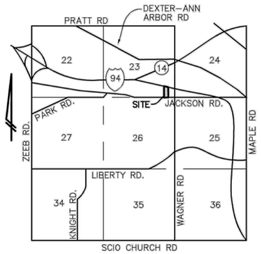

VICINITY MAP
(NO SCALE)

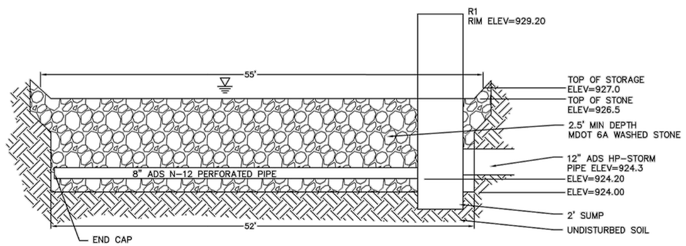

INFILTRATION TRENCH "A" CROSS SECTION 'A-A' DETAIL
(NOT TO SCALE)

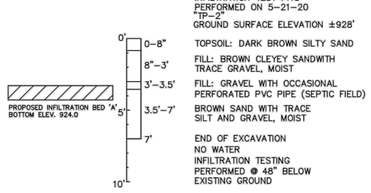

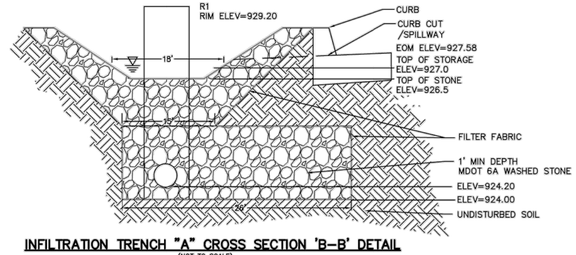

INFILTRATION TRENCH "A" CROSS SECTION 'B-B' DETAIL
(NOT TO SCALE)

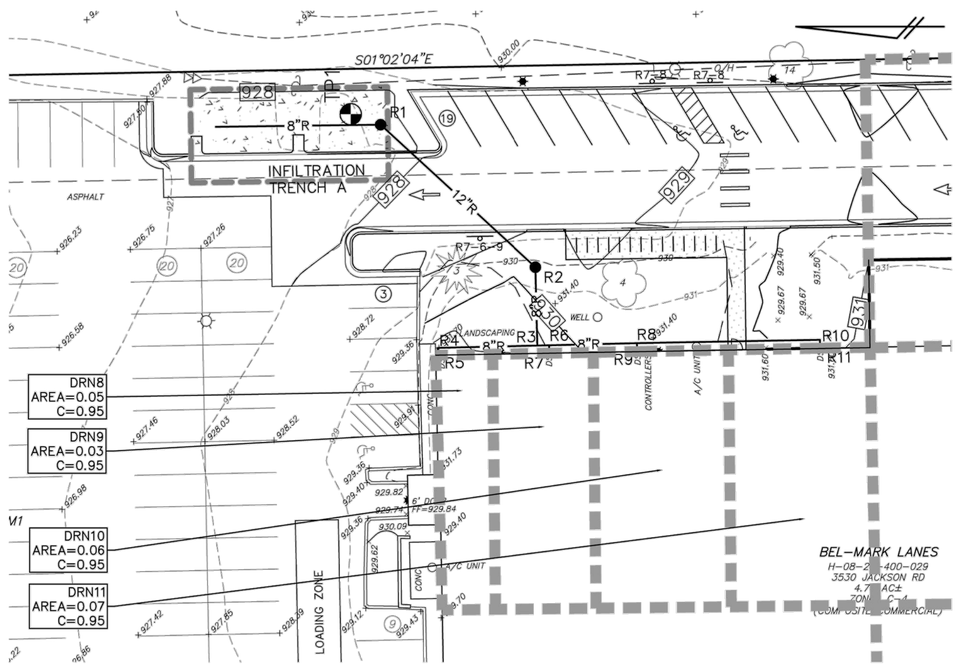

EWASHTENAW.ORG CONTOURS
581 = EXISTING 1 FT. CONTOUR
580 = EXISTING 5 FT. CONTOUR
FIELDWORK GENERATED CONTOURS
581 = EXISTING 1 FT. CONTOUR
580 = EXISTING 5 FT. CONTOUR
14 = EXISTING TREE / TAG NUMBER (SEE TREE IDENTIFICATION TABLE)

PROPOSED INDIVIDUAL DRAINAGE INLET AREAS

NAME	IMPERVIOUS SFT	ACRE	C	PERVIOUS SFT	ACRE	C	TOTAL AREA SFT	ACRE	WEIGHTED C
DRN8	1,097	0.03	0.95	0	0.00	0.25	1,097	0.03	0.95
DRN9	2,012	0.05	0.95	0	0.00	0.25	2,012	0.05	0.95
DRN10	2,712	0.06	0.95	0	0.00	0.25	2,712	0.06	0.95
DRN11	2,870	0.07	0.95	0	0.00	0.25	2,870	0.07	0.95

WASHTENAW COUNTY SOIL SURVEY CLASSIFICATION

FoB – FOX SANDY LOAM, 2 TO 6 PERCENT SLOPES
MmB – MIAMI LOAM, 2 TO 6 PERCENT SLOPES
MmC – MIAMI LOAM, 6 TO 12 PERCENT SLOPES
• • • • • • – SOILS BOUNDARY

SOILS ARE BASED ON USDA SOIL SURVEY OF WASHTENAW COUNTY.

INFILTRATION TRENCH 'A' CALCULATIONS (CONT.)

W10	Detention/Retention Requirement						
	Detention						
	Peak of Unit Hydrograph Qp=238.6Tc$^{-0.82}$ =					4.231	cfs/in-mi^2
	Total Site Area (ac) excluding "Self Crediting" BMPs Area =					0.32	ac
	Q_{100} = $Q_{100\text{-per}}$ * $Q_{100\text{-imp}}$ =					6.3086287	in
	Peak Flow PF =Qp*Q100*Area/640 =					13.345904	cfs
	Δ = PF - 0.15 Area =					13.297904	cfs
	Vdet = (Δ/PF)*$V_{100\text{-post}}$ =					**3,727**	ft^3
W11	Determine Applicable BMPs and Associated Volume Credits						
	Proposed BMP	Area (ft2)	Storage Volume (ft3) Surface	Soil	Avg. Design Infiltration Rate	Infiltration Volume During Storm (ft3)	Total Volume Reduction (ft3)
	Porous Pavement w/ infiltration Bed						
	Infiltration Basin						
	Subsurface Infiltration Bed						
	Infiltration Trench	1,430	454	429	9	6,435	**7,318**
	Rain Garden / Bioretention						
	Dry Well						
	Bioswale						
	Vegetated Filter Strip						
	Green Roof						
	Total Volume Reduction Credit by Proposed Structural BMPs =					7,318	ft^3
	Runoff Volume Infiltration Requirement (Vinf) from W9 =					1,261	ft^3
	Runoff Volume Credit =					6,057	ft^3
Infiltration Trench Calculations							
Trench Storage Volume							
	Trench top width =	18	ft				
	Trench bottom width=	15	ft				
	Design Water Depth =	0.5	ft				
	Trench Length=	55	ft				
	Trench Storage Volume= Average trench area * Maximum water depth * Length						
		454	cft				
	Stone bed width=	26	ft				
	Stone bed length=	55	ft				
	Stone Storage Depth=	1	ft				
	Bottom area =	1,430	sf				
	Stone Storage Volume = Average Bed Area (sf) * Maximun Design Water Depth * Porosity						
	= 1430 sf * 1 ft * 0.30						
	= 429 cft						
	Design Infiltration Rate =	9	in/hr				
	Bottom Elevation =	924					
Total Time to Infiltrate - should be less than 48 hours							
	Tinf = V_{100} (cft) / (Area (sf) * Design Infiltration Rate (in/hr) * (1/12"))						
	= 3727 (cft) / (1430 * 9 x 1ft/12inches)						
	= **3.48** hr						
W13	Summary						
	A. Storm Water Management Summary						
	Minimum Onsite Infiltration Requirement, Vinf =					1,261	cft
	Designed/Provided Infiltration Volume =					7,318	cft
	% Minimum Required Infiltration Provided =					580	%
	Total Calculated Detention Volume, Vdet =					3,727	cft
	Net Required Detention Volume						
	(Vdet - Designed/Provided Infiltration Volume) =					0	cft
	B. Detention Volume Increase for sites where the required infiltration cannot be achieved.						
	% Required Infiltration NOT provided						
	(100%-%Minimum Required Infiltration Provided) N/A						%
	Net % Penalty						
	(20% x %Required Infiltration NOT Provided) N/A						%
	Total Required Detention Volume, including penalty						
	[(100% + Net % Penalty) x Net Required Detention Volume)] N/A						cft
	Additional Design Requirements						
	New Impervious Area =	7,310	sf				
	Maximum Impervious Loading Ratio of 8 to 1	Impervious area/infiltration area					
	= 7310sft / 1430sft						
	= 5 to 1						
	Maximum total Loading Ratio of 10 to 1	Disturbed site area/infiltration area					
	= 13760sft / 1430sft						
	= 10 to 1						

NOTES:
1. CALCULATIONS FOR STORAGE VOLUME FROM ENTIRE TRIBUTARY AREA TO BASIN PER REQUEST OF THE OWNER.
2. WCWRC REQUIRES ONLY DISTURBED AREA BE TREATED/DETAINED IF LESS THAN 50% OF THE SITE IS BEING DISTURBED.
3. NEW IMPERVIOUS (7,310 SFT) USED FOR IMPERVIOUS LOADING RATIO.
4. TOTAL DISTURBED AREA (13,760 SFT) USED FOR TOTAL AREA LOADING RATIO.

INFILTRATION TRENCH 'A' CALCULATIONS

Standard Method Runoff Volume Work Sheets							
	Project: Belmark Lanes						
	Basin: Infiltration Trench A						
	By: Joe Maynard, P.E.						
	Date: 8/11/2020						
W1	Determining Post-Development Cover types, Areas, Curve Numbers and Runoff						
	Total Site area =	4.78	Ac				
	Disturbed Site Area =	0.32	Ac	13,760	ft2		
	% Disturbed =	7	%				
	If less than 50% of the site over the last 10 years is being disturbed after initial approval by the WCWRC, only the disturbed area needs to be updated.						
	Total Tributary area Excluding "Self-Crediting" BMPS =			0.32	Ac		
	=			13,760	ft2		
	Rational Method Variables						
	Cover Type	Soil Type	Slope Letter	Area (ft2)	Area(acre)	Runoff Coefficient C	(C)(Area)
	Pervous	B	A	6,450	0.15	0.25	0.04
	Impervious		A	7,310	0.17	0.95	0.16
	Water		A	0	0	1	0.00
						Σ(C)(Area) =	0.20
						Σ(Area) =	0.32
						Weighted C = Σ(C)(Area)/Σ(Area) =	0.63
	NRCS Variables - Pervous Cover						
	Cover Type	Soil Type		Area (ft2)	Area(acre)	Curve Number	(CN)(Area)
	Open Space-Good	B		6,450	0.15	61	9.15
						Σ(CN)(Area) =	9.15
						Σ(Area) =	0.15
						Weighted CN = Σ(C)(Area)/Σ(Area) =	61
	NRCS Variables - Impervious Cover						
	Cover Type	Soil Type		Area (ft2)	Area(acre)	Curve Number	(CN)(Area)
	Paved			7310	0.17	98	16.66
	Water			0	0	98	0.00
						Σ(CN)(Area) =	16.66
						Σ(Area) =	0.17
						Weighted CN = Σ(C)(Area)/Σ(Area) =	98
W2	First Flush						
			Vff =	(1")(1/12")(43560ft3/1ac)AC			
	Total Area		A =	0.32	Ac		
	Weighted C		C =	0.63			
			Vff =	732	cft		
W3	Pre-development Bankfull Runoff Calculation (Vbf-pre)						
	Existing Cover Type =	Meadow					
	2year/24 hour storm event P =	2.35	inches				
	Curve Number for Good Cover Woods or Meadow CN =	58					
	S = (1000/CN) - 10 =	7.241379	inches				
	Q = (P-0.2S)^2/(P+0.8S) =	0.099852	inches				
	Total Site Area (SF) excluding "Self-Crediting" BMPs Area =	13,760	square feet				
	Vbf-pre = Q(1/12)Area =	114	ft^3				
W4	Pervous Cover Post-development Bankfull Runoff Calculation (Vbf-per-post)						
	2year/24 hour storm event P =	2.35	inches				
	Pervous Curve Number from W1 =	61					
	S = (1000/CN) - 10 =	6.393443	inches				
	Q = (P-0.2S)^2/(P+0.8S) =	0.15375	inches				
	Pervious Cover Area from W1 =	6,450	square feet				
	Vbf-per-post = Q(1/12)Area =	83	ft^3				
W5	Impervious Cover Post-development Bankfull Runoff Calculation (Vbf-imp-post)						
	2year/24 hour storm event P =	2.35	inches				
	Impervious Curve Number from W1 =	98					
	S = (1000/CN) - 10 =	0.204082	inches				
	Q = (P-0.2S)^2/(P+0.8S) =	2.121674	inches				
	Impervious Cover Area from W1 =	7,310	square feet				
	Vbf-imp-post = Q(1/12)Area =	1,292	ft^3				
W6	Pervious Cover Post-development 100-Year Storm Runoff Calculation ($V_{100\text{-per-post}}$)						
	100year/24 hour storm event P =	5.11	inches				
	Pervious Curve Number from W1 =	61					
	S = (1000/CN) - 10 =	6.393443	inches				
	Q = (P-0.2S)^2/(P+0.8S) =	1.435628	inches				
	Pervious Cover Area from W1 =	6,450	square feet				
	$V_{V100\text{-per-post}}$ = Q(1/12)Area =	772	ft^3				
W7	Impervious Cover Post-development 100-Year Storm Runoff Calculation ($V_{100\text{-imp-post}}$)						
	100year/24 hour storm event P =	5.11	inches				
	Impervious Curve Number from W1 =	98					
	S = (1000/CN) - 10 =	0.204082	inches				
	Q = (P-0.2S)^2/(P+0.8S) =	4.873	inches				
	Impervious Cover Area from W1 =	7,310	square feet				
	$V_{100\text{-imp-post}}$ = Q(1/12)Area =	2,968	ft^3				
W8	Determine Time of Concentration for Applicable Flow Types (Tc-hrs)						
Flow Type	K	Change in Elevation	Length (L)	Slope % (S*100)	$S^{0.5}$	V=K*$S^{0.5}$	Tc = L/(V*3600)
Sheet Flow*	0.48	4	100	4	2	0.96	0.03
Waterway	1.2						
Small Trib.	2.1						
						Total Tc =	0.03
	*Sheet flow cannot exceed 300 feet. Anything beyond this is considered waterway.						
W9	Runoff Summary & Onsite Infiltration Requirement						
	First Flush Volume Vff =					732	ft^3
	Pervious-Post Development Bankfull Runoff Volume Vbf-per-post =					83	ft^3
	Impervious Cover Post-Development Bankfull Runoff Volume Vbf-imp-post =					1,292	ft^3
	Total BF Volume Vbf-post =					1,375	ft^3
	Pervious - Post Development 100-year Runoff Volume $V_{100\text{-per-post}}$ =					772	ft^3
	Impervious Cover Post-Development 100-year Runoff Volume $V_{100\text{-imp-post}}$ =					2,968	ft^3
	Total 100-year Volume V_{100} =					**3,740**	ft^3
	Determine Onsite Infiltration Requirement						
	Subtract the Pre-Development Bankfull from the Post Development Bankfull Volume						
	Total Post-Development Bankfull Volume Vbf-post =					1,375	ft^3
	Pre-Development Bankfull Runoff Volume Vbf-pre =					114	ft^3
	Bankfull Volume Difference =					1,261	ft^3
	Compare the Bankfull Volume Difference with the First Flush Volume.						
	The greater of the two is the Onsite Infiltration Requirement.						
	Onsite Infiltration Requirement V_{Inf} =					**1,261**	ft^3

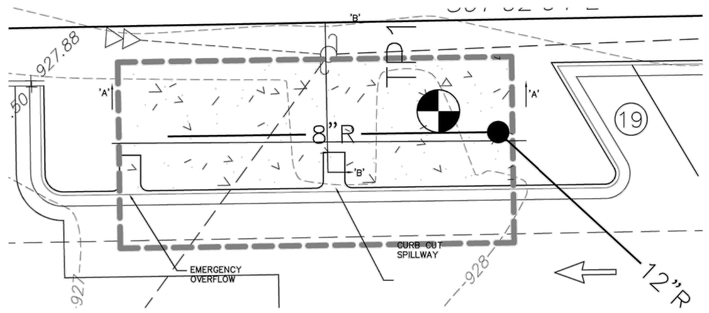

INFILTRATION TRENCH "A" PLAN VIEW
(SCALE 1"=10')

INFILTRATION TRENCH INSTALLATION NOTES

1. EXCAVATE AREA TO SAND LAYER. DESIGN ENGINEER OR GEOTECHNICAL ENGINEER TO BE PRESENT AT EXCAVATION TO VERIFY SAND PRESENT.
2. PLACE NON-WOVEN GEO-TEXTILE FILTER FABRIC OVER ENTIRE AREA. LEAVE ENOUGH AT EDGES TO WRAP OVER TOP OF STONE LAYER ONCE PLACED.
3. PLACE TWO INCHES OF NATURAL STONE MEETING THE GRADATION REQUIREMENTS OF MDOT 6A CRUSHED AND WASHED (CLEAN).
4. INSTALL 8 INCH HDPE PERFORATED WRAPPED UNDERDRAIN PIPE, CLEANOUTS, SEDIMENT PRETREATMENT UNIT, OUTLET STRUCTURE AND STORM SEWER PIPE AS SHOWN IN PLAN DETAIL. FOR STRUCTURES AND STORM SEWER PIPE SEE STORM SEWER PLAN/PROFILE FOR DESIGN INFORMATION. DESIGN ENGINEER TO BE PRESENT AT CONCLUSION OF INSTALLATION TO VERIFY PIPE LAYOUT.
5. COMPLETE INSTALLATION OF STONE TO ELEVATION SHOWN IN PROFILE DETAIL.
6. FOLD AND SECURE NON-WOVEN GEO-TEXTILE FILTER FABRIC OVER STONE WITH A MINIMUM OVERLAP OF 16 INCHES.
7. DO NOT REMOVE EROSION ND SEDIMENT CONTROL MEASURES UNTIL SITE IS FULLY STABILIZED.
8. COMPLETE INSTALLATION OF REMAINDER OF STORM SEWER SYSTEM.

BOUNDARY & TOPOGRAPHICAL INFORMATION PERFORMED BY MIDWESTERN CONSULTING AND PROVIDED BY CLIENT.

Know what's below. Call before you dig.

LEGEND

☆ = LIGHT POLE
⊕ = UTILITY POLE
▽ = GUY ANCHOR
⚷ = HYDRANT
⁵⁸⁰·¹⁵ = SPOT ELEV.
ᵩ = POST
▶ = GATE VALVE
⊸ = SIGN
TC = TOP OF CURB
TW = TOP OF WALL
○ = MANHOLE
□ = CATCHBASIN
◡ = END SECTION
+05 = DOWNSPOUT
= GRAVEL
= FENCE
= CONCRETE
= ASPHALT
r = EXISTING STORM
s = EXISTING SANITARY
w = EXISTING WATER
g = EXISTING GAS
e = EXISTING ELECTRIC
t = EXISTING TELEPHONE

BENCHMARK BM1=NAIL IN S'LY FACE OF LIGHTPOLE, 116'± NORTH OF BUILDING AND 120'± WEST OF EAST PROPERTY LINE, ELEV=927.19.

BM2=TOP ARROW ON HYDRANT AT SOUTHEAST CORNER OF PROPERTY, ELEV=931.30.

TO ACHIEVE NAVD88 DATUM, ADD 0.53' TO ALL ELEVATIONS.

REVISIONS

SCALE 40
0 10 20
SCALE: 1"=20'

PREPARED BY
JOSEPH K. MAYNARD P.E., MICH No. 52559

STATE OF MICHIGAN
JOSEPH K. MAYNARD
ENGINEER
No. 52559
PROFESSIONAL ENGINEER

CIVIL ENGINEERS
PLANNERS • SURVEYORS
LANDSCAPE ARCHITECTS
3526 W. LIBERTY RD
SUITE 400
ANN ARBOR, MI 48103
TEL: 734-761-8800
FAX: 734-761-8530
WASHTENAWENGINEERING.COM

WASHTENAW ENGINEERING

CLIENT
DEALER ACQUISITIONS
17408 EDGEWATER DR.
LAKEWOOD, OH. 44107
TEL: (216)-316-0677

SHEET
PREVIOUSLY INSTALLED INFILTRATION TRENCH A DETAILS AND CALCULATIONS

PROJECT
3530 JACKSON RD

SECTION 23 TOWN 2 SOUTH RANGE 5 EAST
WASHTENAW COUNTY • MICHIGAN
SCIO TOWNSHIP
DATE 11-23-2021
JOB NO. 32911
DWG NO. 911-stm-infil-calc
FIELD BOOK 663
FILE NO. 10628
SHEET C-600

COPYRIGHT © 2020 WASHTENAW ENGINEERING COMPANY, INC.
NOTICE: THESE PLANS ARE THE PROPERTY OF WASHTENAW ENGINEERING COMPANY, INC. AND SHALL NOT BE USED IN WHOLE OR IN PART WITHOUT THE CONSENT OF WASHTENAW ENGINEERING COMPANY, INC.

THE OWNER SHALL NOT USE OR AUTHORIZE ANY OTHER PERSON TO USE THE DRAWINGS, SPECIFICATIONS, ELECTRONIC DATA AND OTHER INSTRUMENTS OF SERVICE ON OTHER PROJECTS, FOR ADDITIONS TO THIS PROJECT OR FOR COMPLETION OF THE PROJECT BY OTHERS SO LONG AS WASHTENAW ENGINEERING COMPANY, INC. (WECO) IS NOT ADJUDGED TO BE IN DEFAULT UNDER THIS AGREEMENT. THE OWNER SHALL INDEMNIFY AND HOLD HARMLESS WECO, WECO'S CONSULTANTS AND AGENTS AND EMPLOYEES OF ANY OF THEM FROM AND AGAINST CLAIMS, DAMAGES, LOSSES AND EXPENSES, INCLUDING BUT NOT LIMITED TO ATTORNEYS' FEES, ARISING OUT OF OR RESULTING THEREFROM, BY ANY PERSON OR ENTITY OTHER THAN WECO, FROM THE USE OF DRAWINGS, SPECIFICATIONS, ELECTRONIC DATA OR OTHER INSTRUMENTS OF SERVICE.

H:\845\dwg\32911\dwg\911-stm-infil-calc.dwg, 11/23/2021 1:35:08 PM, 1:1



D-Series Size 1
LED Wall Luminaire

Catalog Number

Notes

Type

d-series

Specifications

Luminaire

Width: 13-3/4" (34.9 cm) Weight: 12 lbs (5.4 kg)
Depth: 10" (25.4 cm)
Height: 6-3/8" (16.2 cm)

Back Box (BBW, ELCW)

Width: 13-3/4" (34.9 cm) BBW Weight: 5 lbs (2.3 kg)
Depth: 4" (10.2 cm) ELCW Weight: 10 lbs (4.5 kg)
Height: 6-3/8" (16.2 cm)

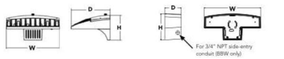

Introduction

The D-Series Wall luminaire is a stylish, fully integrated LED solution for building-mount applications. It features a sleek, modern design and is carefully engineered to provide long-lasting, energy-efficient lighting with a variety of optical and control options for customized performance.

With an expected service life of over 20 years of nighttime use and up to 74% in energy savings over comparable 250W metal halide luminaires, the D-Series Wall is a reliable, low-maintenance lighting solution that produces sites that are exceptionally illuminated.

Ordering Information

EXAMPLE: DSXW1 LED 20C 1000 40K T3M MVOLT DDBTXD

DSXW1 LED

Series	LEDs	Drive Current	Color temperature	Distribution	Voltage	Mounting
DSXW1 LED	10C 10 LEDs (one engine)	350 350 mA	30K 3000 K	T2S Type II Short	MVOLT [1,2]	**Shipped included**
	20C 20 LEDs (two engines) [3]	530 530 mA	40K 4000 K	T2M Type II Medium	120 [1]	(blank) Surface mounting bracket
		700 700 mA	50K 5000 K	T3S Type III Short	208 [1]	BBW Surface-mounted back box (for conduit entry) [4]
		1000 1000 mA (1 A) [3]	AMBPC Amber phosphor converted	T3M Type III Medium	240 [1]	
				T4M Type IV Medium	277 [1]	
				TFTM Forward Throw Medium	347 [5,6]	
				ASYDF Asymmetric diffuse.	480 [5,6]	

Control Options	
Shipped included	
PE	Photoelectric cell, button type [7]
DMG	0-10V dimming driver (no controls; wires pulled outside fixture) [8]
PIR	180° motion/ambient light sensor, <15' mtg ht [7,9]
PIRH	180° motion/ambient light sensor, 15-30' mtg ht [7,9]
PIR1FC3V	Motion/ambient sensor, 8-15' mounting height, ambient sensor enabled at 1fc [7,9]
PIRH1FC3V	Motion/ambient sensor, 15-30' mounting height, ambient sensor enabled at 1fc [7,9]
ELCW	Emergency battery backup (includes external component enclosure), non-CEC compliant [10]
Shipped installed	
PE	Photoelectric cell, button type [7]
DMG	0-10V dimming driver (no controls; wires pulled outside fixture) [8]
PIR	180° motion/ambient light sensor, <15' mtg ht [7,9]
PIRH	180° motion/ambient light sensor, 15-30' mtg ht [7,9]
PIR1FC3V	Motion/ambient sensor, 8-15' mounting height, ambient sensor enabled at 1fc [7,9]
PIRH1FC3V	Motion/ambient sensor, 15-30' mounting height, ambient sensor enabled at 1fc [7,9]
ELCW	Emergency battery backup (includes external component enclosure), non-CEC compliant [10]

Other Options	
Shipped installed	
SF	Single fuse (120, 277 or 347V) [2]
DF	Double fuse (208, 240 or 480V) [2]
HS	House-side shield [11]
SPD	Separate surge protection
Shipped separately [11]	
BSW	Bird-deterrent spikes
WG	Wire guard
VG	Vandal guard
DDL	Diffused drop lens

Finish (required)			
DDBXD	Dark bronze	DSSXD	Sandstone
DBLXD	Black	DDBTXD	Textured dark bronze
DNAXD	Natural aluminum	DBLBXD	Textured black
DWHXD	White	DNATXD	Textured natural aluminum
DWHGXD	Textured white	DSSTXD	Textured sandstone

Accessories

Ordered and shipped separately.

DSXRMS U House-side shield (one per light engine)
DSXRSBW U Bird-deterrent spikes
DSXRWG U Wire guard accessory
DSXRVG U Vandal guard accessory

NOTES

1. 20C 1000 is not available with PIR, PIRH, PIR1FC3V or PIRH1FC3V.
2. MVOLT driver operates on any line voltage from 120-277V (50/60 Hz).
3. Single fuse (SF) requires 120, 277 or 347 voltage option. Double fuse (DF) requires 208, 240 or 480 voltage option.
4. Only available with 20C, 700mA or 1000mA. Not available with PIR or PIRH.
5. Back box ships installed on fixture. Cannot be field installed. Cannot be ordered as an accessory.
6. Photocontrol (PE) requires 120, 208, 240, 277 or 347 voltage option. Not available with motion/ambient light sensors (PIR or PIRH).
7. Reference Motion Sensor table on page 3.
8. Cold weather (-20°C) rated. Not compatible with conduit entry applications. Not available with BBW mounting option. Not available with fusing. Not available with 347 or 480 voltage options. Emergency components located in back box housing. Emergency mode IES files located on product page at www.lithonia.com
9. Not available with ELCW.
10. Also available as a separate accessory; see Accessories information.

© 2013-2018 Acuity Brands Lighting, Inc. All rights reserved.

D-Series Size 0
LED Area Luminaire

Catalog Number

Notes

Type

d-series

Specifications

EPA: 0.95 ft² (.09 m²)
Length: 26" (66.0 cm)
Width: 13" (33.0 cm)
Height$_1$: 3" (7.62 cm)
Height$_2$: 7" (17.8 cm)
Weight (max): 16 lbs (7.25 kg)

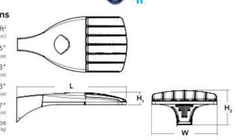

Introduction

The modern styling of the D-Series is striking yet unobtrusive - making a bold, progressive statement even as it blends seamlessly with its environment. The D-Series distills the benefits of the latest in LED technology into a high performance, high efficacy, long-life luminaire. The outstanding photometric performance results in sites with excellent uniformity, greater pole spacing and lower power density. It is ideal for replacing up to 400W metal halide with typical energy savings of 70% and expected service life of over 100,000 hours.

A+ Capable options indicated by this color background.

Ordering Information

EXAMPLE: DSX0 LED P6 40K T3M MVOLT SPA NLTAIR2 PIRHN DDBXD

DSX0 LED

Series	LEDs	Color temperature	Distribution	Voltage	Mounting
DSX0 LED	**Forward optics**	30K 3000 K	T1S Type I short (Automotive)	MVOLT [4,5]	**Shipped included**
	P1 P4 P7	40K 4000 K	T2S Type II short	120 [1]	SPA Square pole mounting
	P2 P5	50K 5000 K	T2M Type II medium	208 [1]	RPA Round pole mounting
	P3 P6		T3S Type III short	240 [1]	WBA Wall bracket [1]
	Rotated optics		T3M Type III medium	277 [1]	SPUMBA Square pole universal mounting adaptor [1]
	P1R P12R		T4M Type IV medium	347 [6,7]	RPUMBA Round pole universal mounting adaptor [1]
	P1T P12T		TFTM Forward throw medium	480 [6,7]	**Shipped separately**
			T5VS Type V very short [1]		KMA8 DDBXD U Mast arm mounting bracket adaptor (specify finish) [8]
			T5S Type V short [1]		
			T5M Type V medium [1]		
			T5W Type V wide [1]		
			BLC Backlight control [1]		
			LCCO Left corner cutoff [1]		
			RCCO Right corner cutoff [1]		

Control options		Other options		Finish (required)	
Shipped installed		**Shipped installed**		DDBXD	Dark bronze
NLTAIR2 nLight AIR generation 2 enabled [9,10]	PIR High/low, motion/ambient sensor, 8-15' mounting height, ambient sensor enabled at 5fc [9,11]	HS House-side shield [12]		DBLXD	Black
PIRHN Network, high/low motion/ambient sensor [9]	PIRH High/low, motion/ambient sensor, 15-30' mounting height, ambient sensor enabled at 5fc [9,11]	SF Single fuse (120, 277, 347V) [3]		DNAXD	Natural aluminum
PER NEMA twist-lock receptacle only (control ordered separately) [9]	PIR1FC3V High/low, motion/ambient sensor, 8-15' mounting height, ambient sensor enabled at 1fc [9,11]	DF Double fuse (208, 240, 480V) [3]		DWHXD	White
PER5 Five-pin receptacle only (control ordered separately) [9,13]	PIRH1FC3V High/low, motion/ambient sensor, 15-30' mounting height, ambient sensor enabled at 1fc [9,11]	L90 Left rotated optics [1]		DDBTXD	Textured dark bronze
PER7 Seven-pin receptacle only (leads exit fixture) (control ordered separately) [9,13]	FAO Field adjustable output [14]	R90 Right rotated optics [1]		DBLBXD	Textured black
DMG 0-10V dimming extend out back of housing for external control (control ordered separately) [9]		DDL Diffused drop lens [8]		DNATXD	Textured natural aluminum
		Shipped separately		DWHGXD	Textured white
		BS Bird spikes [15]			
		EGS External glare shield			

©2011-2020 Acuity Brands Lighting, Inc. All rights reserved.

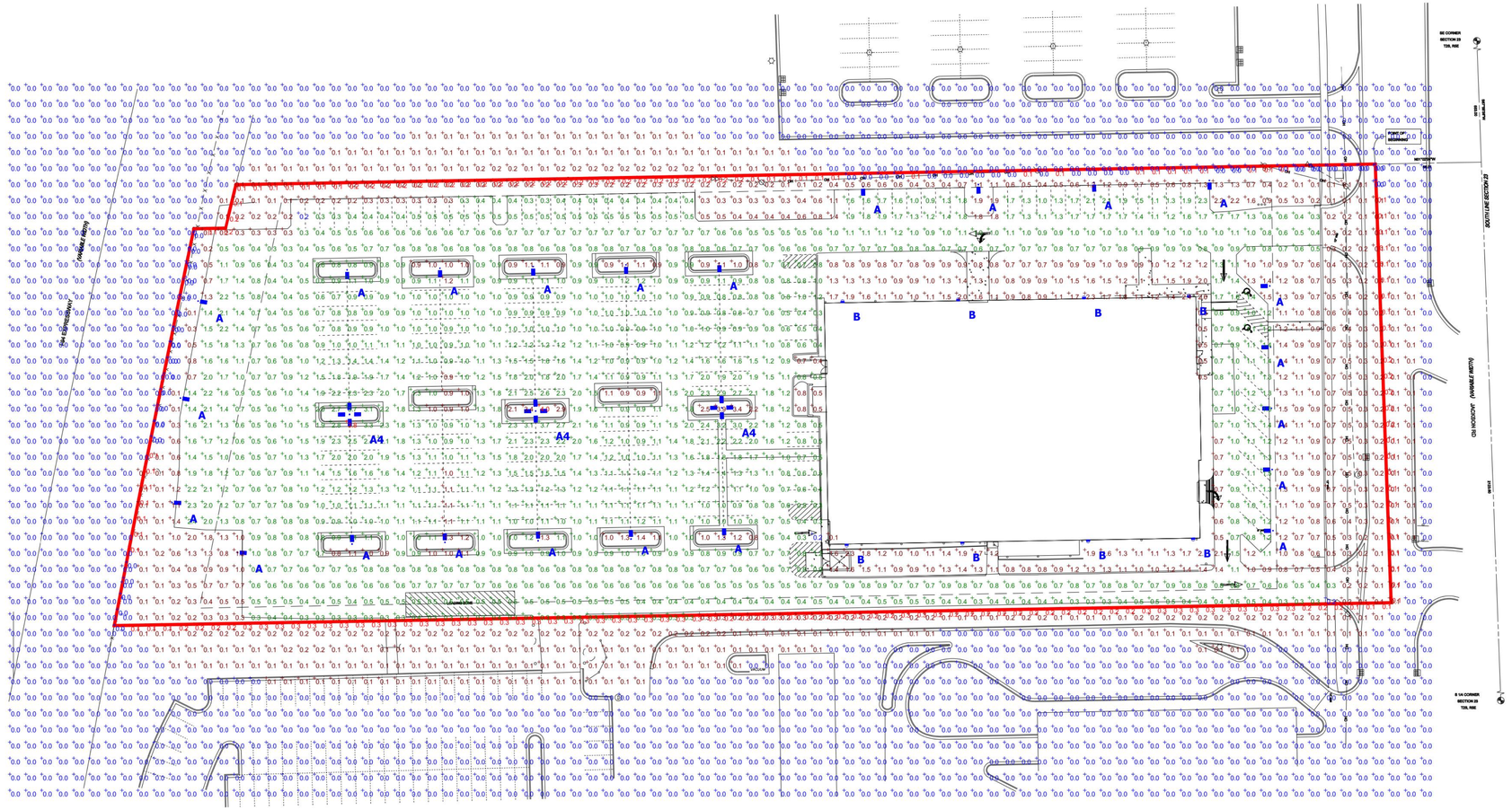

Plan View
Scale - 1" = 40ft

Statistics							
Description	Symbol	Avg	Max	Min	Max/Min	Avg/Min	Avg/Max
OVERALL	+	0.4 fc	4.0 fc	0.0 fc	N/A	N/A	0.1:1
PARKING LOT	+	1.0 fc	3.8 fc	0.2 fc	19.0:1	5.0:1	0.3:1
PROPERTY LINE	+	0.2 fc	0.3 fc	0.0 fc	N/A	N/A	0.7:1

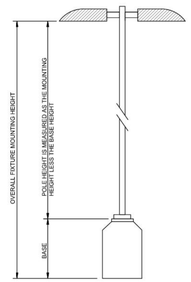

Alternates Note
THE USE OF FIXTURE ALTERNATES MUST BE RESUBMITTED TO THE CITY FOR APPROVAL.

Ordering Note
FOR INQUIRIES CONTACT GASSER BUSH AT QUOTES@GASSERBUSH.COM OR 734-266-6705.

Mounting Height Note
MOUNTING HEIGHT IS MEASURED FROM GRADE TO FACE OF FIXTURE. POLE HEIGHT SHOULD BE CALCULATED AS THE MOUNTING HEIGHT LESS BASE HEIGHT.

Drawing Note
THIS DRAWING WAS GENERATED FROM AN ELECTRONIC IMAGE FOR ESTIMATION PURPOSE ONLY. LAYOUT TO BE VERIFIED IN FIELD BY OTHERS.

Schedule						
Symbol	Label	Quantity	Manufacturer	Description	Lamp	Mounting Height
	A	23	Lithonia Lighting	SINGLE DSX0 LED AREA LIGHT, 4000K	LED	18'-0"
	A4	3	Lithonia Lighting	QUAD DSX0 LED AREA LIGHT, 4000K	LED	18'-0"
	B	8	Lithonia Lighting	DSXW1 LED WALLPACK, 4000K	LED	14'-0"

General Note
1. SEE SCHEDULE FOR LUMINAIRE MOUNTING HEIGHT.
2. CALCULATIONS ARE SHOWN IN FOOTCANDLES AT: 0' - 0"

THE ENGINEER AND/OR ARCHITECT MUST DETERMINE APPLICABILITY OF THE LAYOUT TO EXISTING / FUTURE FIELD CONDITIONS. THIS LIGHTING LAYOUT REPRESENTS ILLUMINATION LEVELS CALCULATED FROM LABORATORY DATA TAKEN UNDER CONTROLLED CONDITIONS IN ACCORDANCE WITH ILLUMINATING ENGINEERING SOCIETY APPROVED METHODS. ACTUAL PERFORMANCE OF ANY MANUFACTURER'S LUMINAIRE MAY VARY DUE TO VARIATION IN ELECTRICAL VOLTAGE, TOLERANCE IN LAMPS, AND OTHER VARIABLE FIELD CONDITIONS. MOUNTING HEIGHTS INDICATED ARE FROM GRADE AND/OR FLOOR UP.

THESE LIGHTING CALCULATIONS ARE NOT A SUBSTITUTE FOR INDEPENDENT ENGINEERING ANALYSIS OF LIGHTING SYSTEM SUITABILITY AND SAFETY. THE ENGINEER AND/OR ARCHITECT IS RESPONSIBLE TO REVIEW FOR MICHIGAN ENERGY CODE AND LIGHTING QUALITY COMPLIANCE.

UNLESS EXEMPT, PROJECT MUST COMPLY WITH LIGHTING CONTROLS REQUIRMENTS DEFINED IN ASHRAE 90.1 2013. FOR SPECIFIC INFORMATION CONTACT GBA CONTROLS GROUP AT ASG@GASSERBUSH.COM OR 734-266-6705.

3530 JACKSON ROAD
PHOTOMETRIC SITE PLAN
PREPARED FOR: NEDERVELD
GASSER BUSH ASSOCIATES
WWW.GASSERBUSH.COM

Designer JD/KB
Date 10/14/2021
Scale Not to Scale
Drawing No. #21-67735-V1
1 of 1

PARKING LEGEND

- (12) CUSTOMER
- (21) EMPLOYEE
- (16) EV CHARGING
- (196) VEHICLE STORAGE

LEGEND

- EXISTING BITUMINOUS
- EXISTING CONCRETE
- PROPOSED BITUMINOUS (STANDARD DUTY)
- PROPOSED BITUMINOUS (HEAVY DUTY)
- PROPOSED CONCRETE (STANDARD DUTY)
- PROPOSED CONCRETE (HEAVY DUTY)

N

0' 15' 30' 60'

SCALE: 1" = 30'

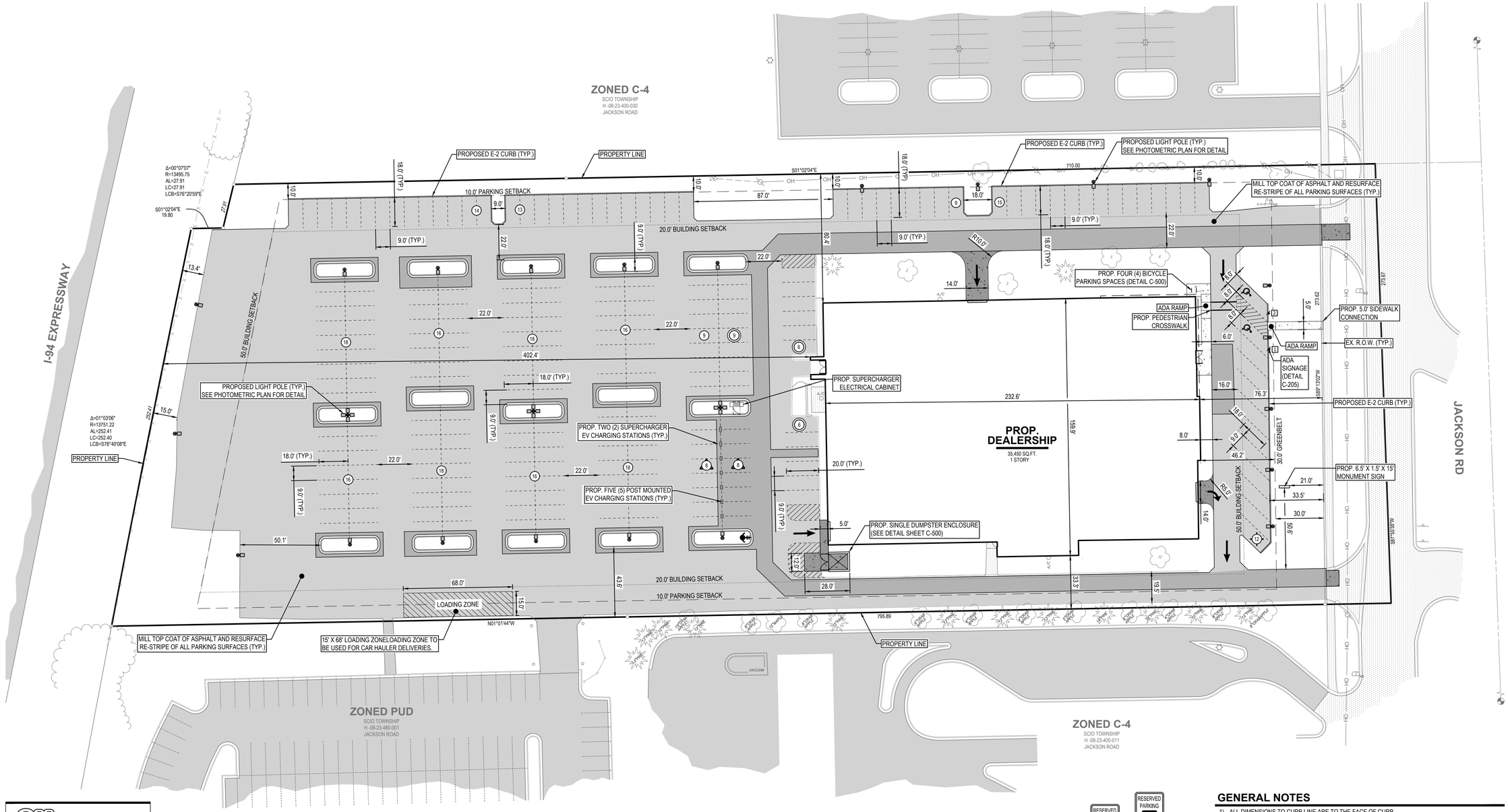

811 Know what's below. CALL before you dig.

UTILITY LOCATIONS ARE DERIVED FROM ACTUAL MEASUREMENTS OR AVAILABLE RECORDS. THEY SHOULD NOT BE INTERPRETED TO BE EXACT LOCATIONS NOR SHOULD IT BE ASSUMED THAT THEY ARE THE ONLY UTILITIES IN THIS AREA.

NOTE:
EXISTING UTILITIES AND SERVICE LINES IDENTIFIED AS "PLAN" WERE OBTAINED FROM AVAILABLE AS-BUILT RECORD DRAWINGS. THE CONTRACTOR SHALL VERIFY THE LOCATION, DEPTH AND STATUS OF ALL UTILITIES AND SERVICE LINES PRIOR TO NEW CONNECTIONS.

R7-8

RESERVED PARKING ONLY

1

R7-8 & R7-8a

RESERVED PARKING ONLY

VAN ACCESSIBLE

2

NOTE: SIGNS SHALL BE MOUNTED TO A 2" SQUARE STEEL POST

SIGN LEGEND

N.T.S.

GENERAL NOTES

1) ALL DIMENSIONS TO CURB LINE ARE TO THE FACE OF CURB.
2) ALL TRAFFIC CONTROL SHALL BE PER THE LATEST EDITION OF THE M.M.U.T.C.D.
3) MONUMENT SIGN SHALL BE UNDER SEPARATE PERMIT FROM SCIO TWP.

NEDERVELD
www.nederveld.com
800.222.1868
ANN ARBOR
3037 Miller Rd.
Ann Arbor, MI 48103
Phone: 734.929.6963
CHICAGO
COLUMBUS
GRAND RAPIDS
HOLLAND
INDIANAPOLIS
ST. LOUIS

PREPARED FOR:

Dealership Acquisitions
Mark Sims

17408 Edgewater Dr.
Lakewood, OH 44107
Phone: 216.316.0677

REVISIONS:

Title: Site Plan Submittal
Drawn: BC/WL Checked: BC Date: 10.25.2021
Title: Site Plan Resubmittal
Drawn: BC/WL Checked: BC Date: 11.24.2021

3530 JACKSON ROAD

Site Layout Plan

3530 Jackson Road
PART OF THE SOUTHEAST 1/4 OF SECTION 23, T2E, R5E, SCIO TOWNSHIP, WASHTENAW COUNTY, MICHIGAN

STAMP:

STATE OF MICHIGAN
JASON L. VAN RYN
ENGINEER
No. 54207
LICENSED PROFESSIONAL ENGINEER

PROJECT NO:
21500178

SHEET NO:
C-205

21500178-CP1.dwg WL 11/24/2021 12:57

© 2021 Nederveld, Inc.

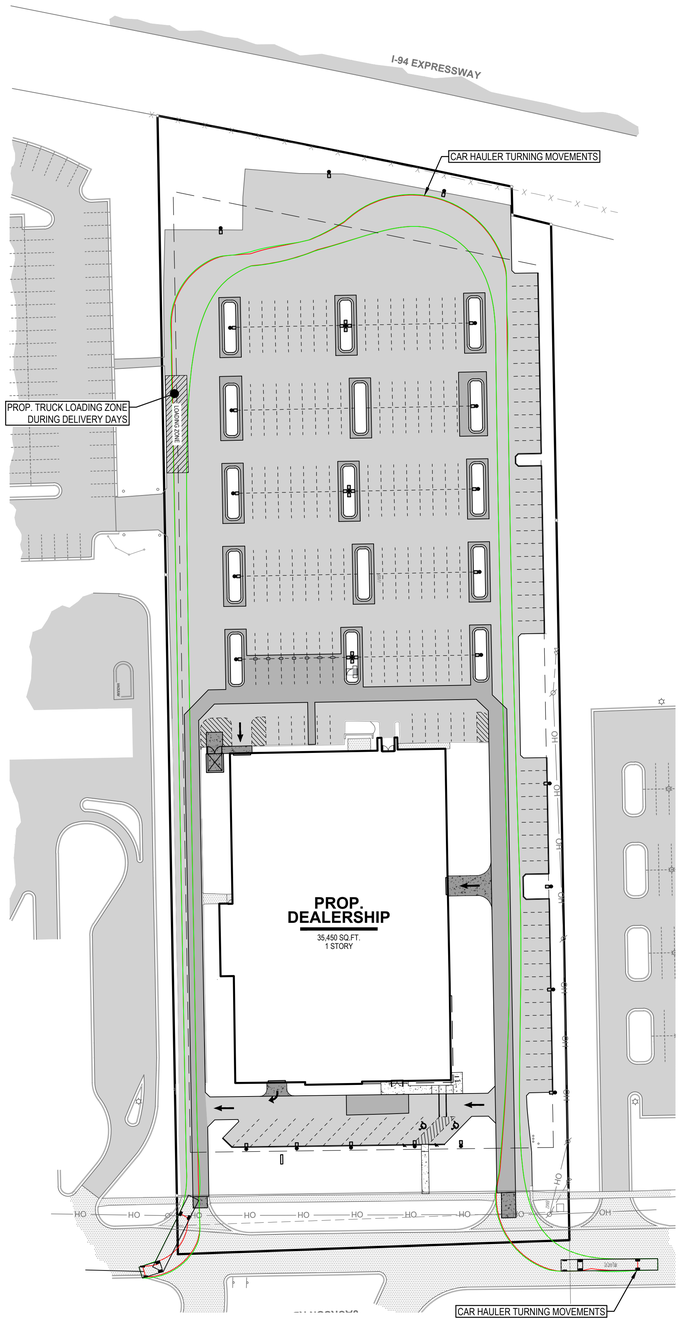

Car Carrier Trailer	
Overall Length	67.499ft
Overall Width	8.000ft
Overall Body Height	13.109ft
Min Body Ground Clearance	0.333ft
Track Width	8.000ft
Lock-to-lock time	4.00s
Curb to Curb Turning Radius	39.900ft

CAR HAULER VEHICLE TURNING PATH

SCALE: 1" = 50'

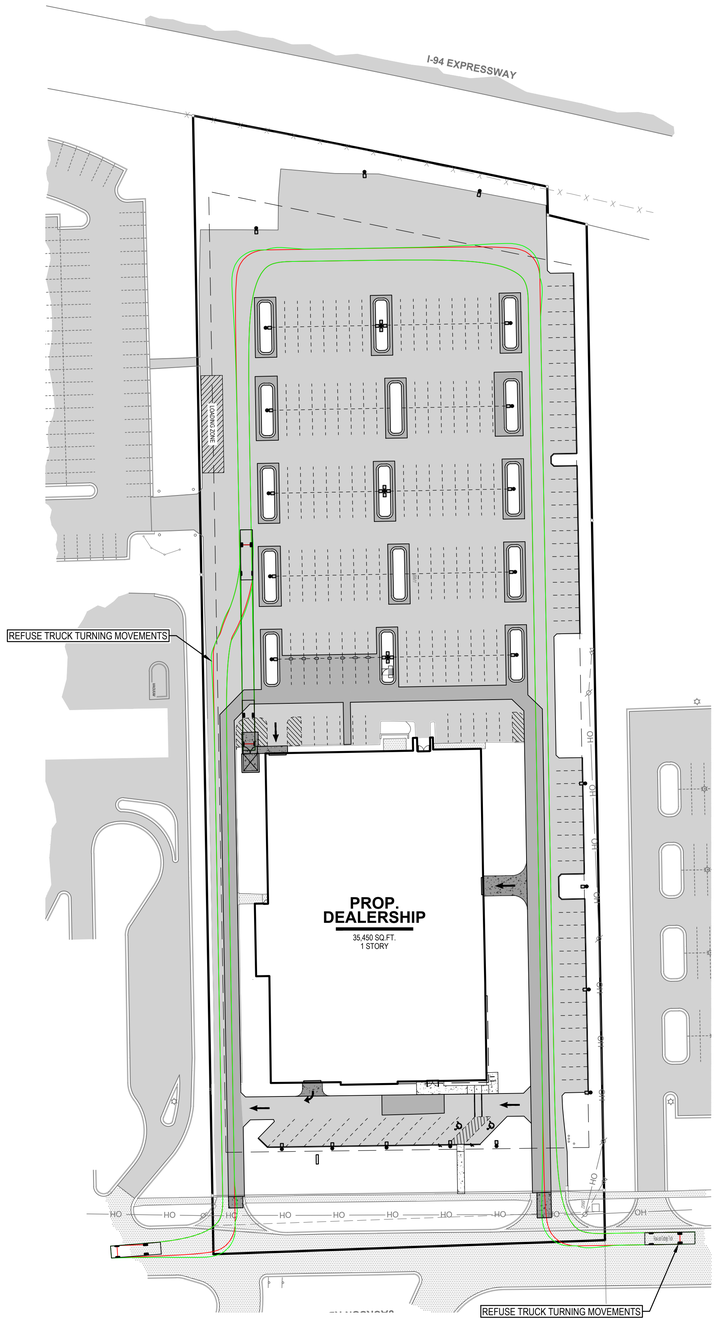

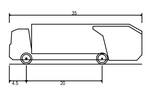

Rear-Load Garbage Truck	
Overall Length	35.000ft
Overall Width	8.375ft
Overall Body Height	10.546ft
Min Body Ground Clearance	1.000ft
Track Width	8.375ft
Lock-to-lock time	6.00s
Curb to Curb Turning Radius	29.300ft

REFUSE TRUCK VEHICLE TURNING PATH

SCALE: 1" = 50'

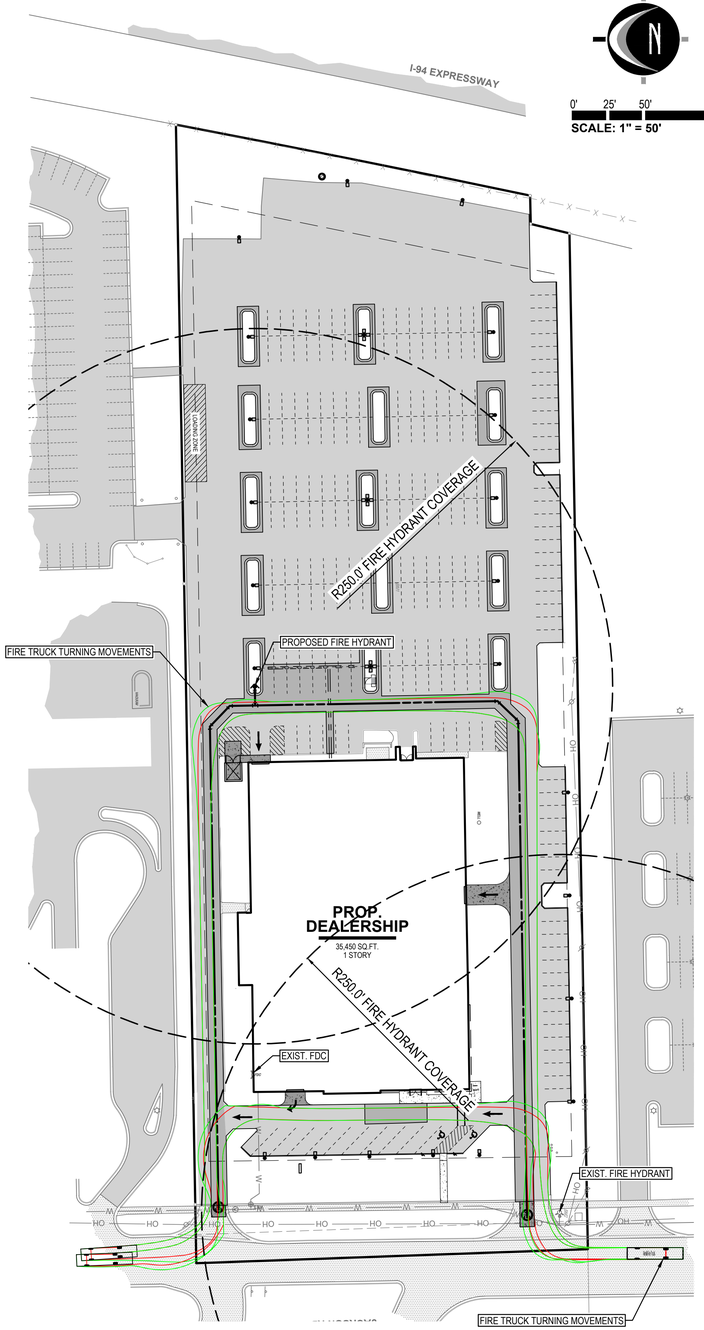

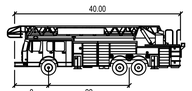

Ladder Truck	feet
Width	: 8.167
Track	: 8.167
Lock to Lock Time	: 5.0
Steering Angle	: 45°

FIRE TRUCK VEHICLE TURNING PATH

SCALE: 1" = 50'

NEDERVELD

www.nederveld.com
800.222.1868

ANN ARBOR
3037 Miller Rd.
Ann Arbor, MI 48103
Phone: 734.929.6963

CHICAGO
COLUMBUS
GRAND RAPIDS
HOLLAND
INDIANAPOLIS
ST. LOUIS

PREPARED FOR:

Dealership Acquisitions
Mark Sims

17408 Edgewater Dr.
Lakewood, OH 44107
Phone: 216.316.0677

REVISIONS:

Title: Site Plan Submittal
Drawn: BC/WL Checked: BC Date: 10.25.2021
Title: Site Plan Resubmittal
Drawn: BC/WL Checked: BC Date: 11.24.2021

3530 JACKSON ROAD

Vehicle Access Plan

3530 Jackson Road

PART OF THE SOUTHEAST 1/4 OF SECTION 23, T2E, R5E, SCIO TOWNSHIP, WASHTENAW COUNTY, MICHIGAN

STAMP:

STATE OF MICHIGAN
JASON L. VAN RYN
ENGINEER
No. 54207
LICENSED PROFESSIONAL ENGINEER

PROJECT NO:
21500178

SHEET NO:
C-206

21500178-CP1.dwg WL 11/24/2021 12:57

© 2021 Nederveld, Inc.

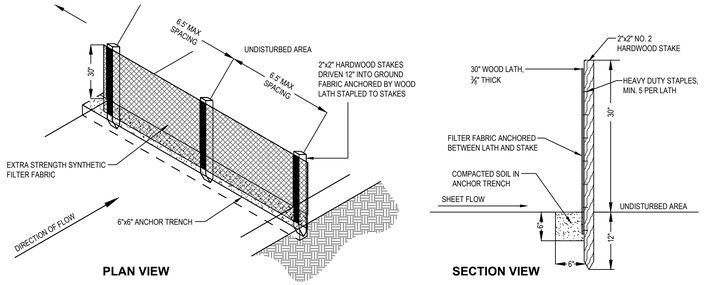

SILT FENCE DETAIL

N.T.S.

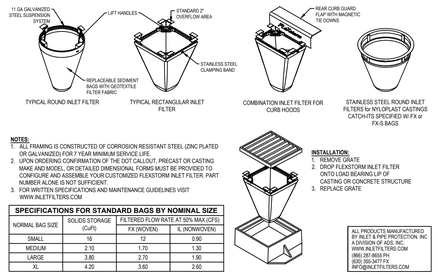

FLEXSTORM INLET FILTER DETAIL

N.T.S.

LEGEND

- EX. GRADE CONTOUR
- PROP. GRADE CONTOUR
- PROP. GRADE ELEV.
- PROP. GRADE ELEV. (BLACKTOP)
- PROP. GRADE ELEV. (CONCRETE)
- PROP. GRADE ELEV. (GUTTER)
- PROP. GRADE ELEV. (EDGE OF METAL)
- PROP. GRADE ELEV. (HIGH POINT)
- EX. BITUMINOUS
- EX. CONCRETE
- PROPOSED BITUMINOUS (STANDARD DUTY)
- PROPOSED BITUMINOUS (HEAVY DUTY)
- PROPOSED CONCRETE (STANDARD DUTY)
- PROPOSED CONCRETE (HEAVY DUTY)
- PROP. STORM SEWER
- SILT FENCE
- PROP. LIMITS OF DISTURBANCE

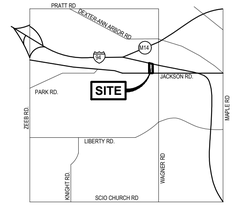

LOCATION MAP

NOT TO SCALE

0' 15' 30' 60'

SCALE: 1" = 30'

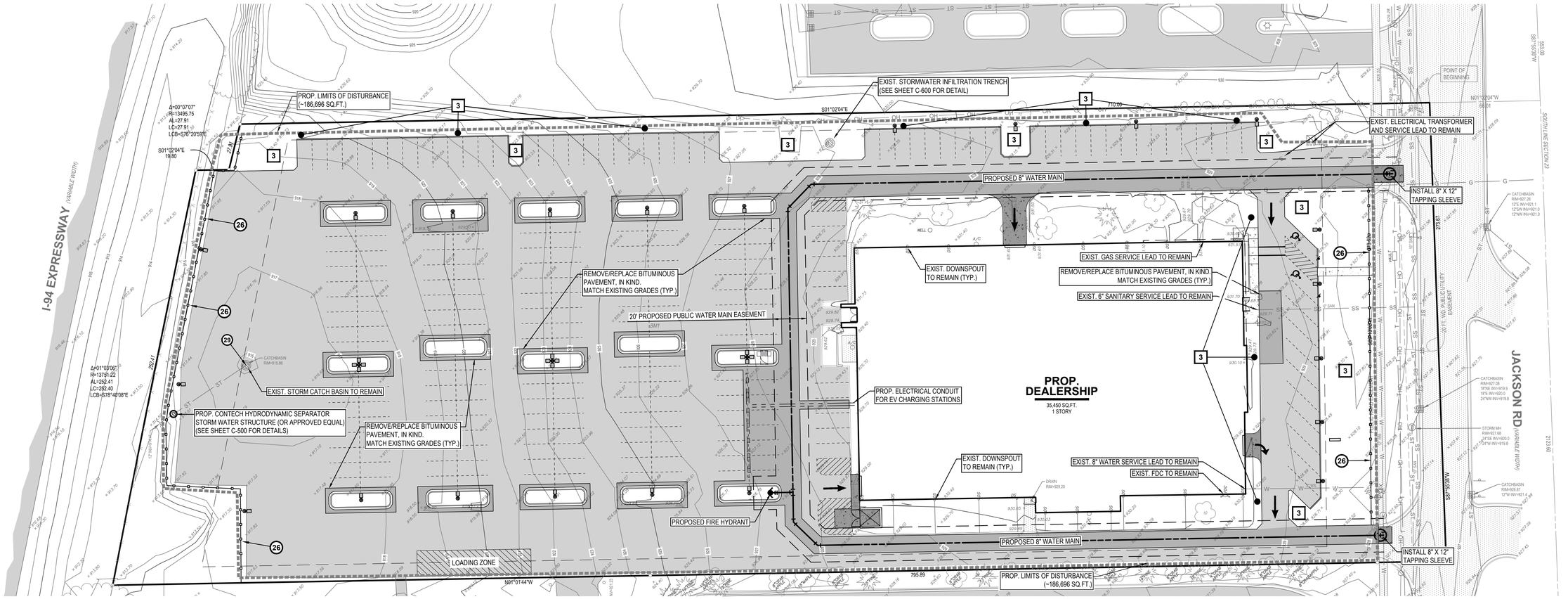

SANITARY SEWER BASIS OF DESIGN

Use the updated City of Ann Arbor "Table A" and "Michigan Criteria for Subsurface Sewage Disposal" Michigan Department of Public Health April 1994 & the "Ten States Standards"

		Quantity of Base Unit	Unit	City of Ann Arbor Table 'A' Type or Use Equivalent	Flow Rate* For Given Use (gpd/unit)	Avgerage Flow (gpd)
Proposed Site: Car Dealership (Table A Designation)						
Uses:	Admin/Employee areas (Non-medical Office Space)	3,810	gsf	Non-medical Office Space	0.06	229
	Customer/Parts/Sales (Retail - no process water)	7,155	gsf	Retail Store(no process water)	0.03	215
	Service Area (General Industrial Space)	23,847	gsf	General Industrial Space	0.04	954
					Total Proposed Flow	**1,397**

*Flow Rate information taken from the updated City of Ann Arbor "Table A"

REU Calculation	
1,397	Average Flow (gpd)
300	1 REU (gpd)
5	REU's required for proposed project (gpd/REU)
10.5	Existing site REU's available
0	**Additional REU's Required**

SITE CONSTRUCTION SEQUENCE & TIMING

2022

	FEB	MAR	APR	MAY	JUN	JUL	AUG
INSTALL SOIL EROSION CONTROL MEASURES							
DEMOLITION & REMOVALS							
STRIP TOPSOIL & ROUGH GRADE SITE							
CONSTRUCT STORM WATER MANAGEMENT SYSTEM							
FINISH GRADE SITE							
PAVE SITE							
RESPREAD TOPSOIL/COMPACTION							
SEED DISTURBED AREAS							
SITE RESTORATION/CLEAN UP							

SOIL EROSION AND SEDIMENTATION CONTROL NOTES

1) CONTRACTOR SHALL POSSESS THE SOIL EROSION AND SEDIMENTATION CONTROL PERMIT PRIOR TO START OF ANY EARTH WORK.
2) CONTRACTOR SHALL MODIFY THIS SOIL EROSION AND SEDIMENTATION CONTROL PLAN TO SHOW THE ADDITIONAL CONTROL MEASURES INTENDED TO BE USED DURING CONSTRUCTION. SUBMIT MODIFICATIONS TO THE CONTROLLING AGENCY, THE OWNER, AND THE ENGINEER.
3) EROSION PROTECTION SHALL BE PROVIDED AT ALL STORM SEWER INLETS AND OUTLETS. ALL BARE EARTH SHALL BE STABILIZED WITH SEEDING.
4) REFER TO THE M.D.O.T. "SOIL EROSION AND SEDIMENTATION CONTROL MANUAL" (APRIL 2006) FOR ADDITIONAL INFORMATION.
5) THE ENTIRE STORM SEWER SYSTEM SHALL BE CLEANED AND FLUSHED FOLLOWING CONSTRUCTION AND PAID RECEIPT THEREOF PROVIDED TO THE ENGINEER AND COUNTY SESC AGENT PRIOR TO FINAL PAYMENT TO THE CONTRACTOR OR FINAL ACCEPTANCE OF THE CONSTRUCTION BY THE OWNER.
6) THE CONTRACTOR SHALL BE RESPONSIBLE TO INSPECT, TAKE CORRECTIVE ACTION AND MAINTAIN ALL TEMPORARY SESC MEASURES DAILY AND AFTER EACH RAIN EVENT UNIT FINAL COMPLETION AND ACCEPTANCE OF THE PROJECT.

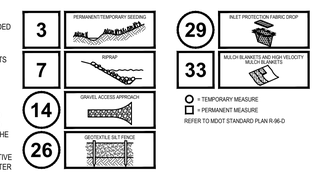

UTILITY CONSTRUCTION NOTES

1. OIL/SEDIMENT INTERCEPTIORS SHALL BE INSTALLED IN THE SERVICE BAY AREAS, INSTALLED UPSTREAM OF SANITARY LEAD. SEE DETAILED ARCHITECTURAL PLANS FOR DETAILS.
2. THE OWNER SHALL BE RESPONSIBLE FOR ALL FUTURE MAINTENANCE OF THE PRIVATE UTILITIES, INCLUDING TREE ROOT REMOVAL.

Know what's below. CALL before you dig.

UTILITY LOCATIONS ARE DERIVED FROM ACTUAL MEASUREMENTS OR AVAILABLE RECORDS. THEY SHOULD NOT BE INTERPRETED TO BE EXACT LOCATIONS NOR SHOULD IT BE ASSUMED THAT THEY ARE THE ONLY UTILITIES IN THIS AREA.

NOTE:
EXISTING UTILITIES AND SERVICE LINES IDENTIFIED AS "(PLAN)" WERE OBTAINED FROM AVAILABLE AS-BUILT RECORD DRAWINGS. THE CONTRACTOR SHALL VERIFY THE LOCATION, DEPTH AND STATUS OF ALL UTILITIES AND SERVICE LINES PRIOR TO NEW CONNECTIONS.

NEDERVELD
www.nederveld.com
800.222.1868
ANN ARBOR
3037 Miller Rd.
Ann Arbor, MI 48103
Phone: 734.929.6963
CHICAGO
COLUMBUS
GRAND RAPIDS
HOLLAND
INDIANAPOLIS
ST. LOUIS

PREPARED FOR:
Dealership Acquisitions
Mark Sims

17408 Edgewater Dr.
Lakewood, OH 44107
Phone: 216.316.0677

REVISIONS:

Title: Site Plan Submittal
Drawn: BC/WL Checked: BC Date: 10.25.2021
Title: Site Plan Resubmittal
Drawn: BC/WL Checked: BC Date: 11.24.2021

3530 JACKSON ROAD

S.E.S.C.& Utility Plan

3530 Jackson Road
PART OF THE SOUTHEAST 1/4 OF SECTION 23, T2E, R5E.
SCIO TOWNSHIP, WASHTENAW COUNTY, MICHIGAN

STAMP:

STATE OF MICHIGAN
JASON L. VAN RYN
ENGINEER
No. 54207
LICENSED PROFESSIONAL ENGINEER

PROJECT NO:
21500178

SHEET NO:
C-300

21500178-CP1.dwg WL 11/24/2021 12:57

© 2021 Nederveld, Inc.

ABBREVIATIONS

ACOUS.	ACOUSTICAL	LAM.	LAMINATE
A.D.A.	AMERICANS WITH DISABILITIES ACT	LAV.	LAVATORY
ADJ.	ADJUSTABLE	LIN.	LINEAR
A.F.F.	ABOVE FINISHED FLOOR	L.L.	LANDLORD
ALUM.	ALUMINUM	L.P.	LOW POINT
ALT.	ALTERNATE	LT.	LIGHT
APPROX.	APPROXIMATE	MAX.	MAXIMUM
ARCH.	ARCHITECTURAL	MDO.	MEDIUM DENSITY OVERLAY
B.A.F.	BIG ASS FAN	MECH.	MECHANICAL
BD.	BOARD	MFR.	MANUFACTURER
BLDG.	BUILDING	MIN.	MINIMUM
BLKG.	BLOCKING	MISC.	MISCELLANEOUS
BOT.	BOTTOM	M.O.	MASONRY OPENING
B.O.	BOTTOM OF	MTD.	MOUNTED
CAB.	CABINET	MTL.	METAL
CLG.	CEILING	(N)	NEW
CL.	CLOSET	N/A	NOT APPLICABLE
CLR.	CLEAR	N.I.C.	NOT IN CONTRACT
COL.	COLUMN	NOM.	NOMINAL
CONC.	CONCRETE	NO. or #	NUMBER
CONSTR.	CONSTRUCTION	NSO.	NEW STORE OPENING
CONT.	CONTINUOUS	N.T.S.	NOT TO SCALE
CTR.	CENTER	O	OWNER - PM
DBL.	DOUBLE	O.C.	ON CENTER
DIA.	DIAMETER	OPNG.	OPENING
DIM.	DIMENSION	OPP.	OPPOSITE
DN.	DOWN	P.LAM.	PLASTIC LAMINATE
DWG.	DRAWING	PLYWD.	PLYWOOD
(E)	EXISTING	PM.	PROJECT MANAGER
EA.	EACH	PR.	PAIR
EL.	ELEVATION	P.T.	PRESSURE TREATED
EHS.	ENVIRONMENTAL, HEALTH & SAFETY	RCP	REFLECTED CEILING PLAN
ELEC.	ELECTRICAL	REC.	RECESSED
EMER.	EMERGENCY	REV.	REVISION
EQ.	EQUAL	REQ'D.	REQUIRED
EQUIP.	EQUIPMENT	RM.	ROOM
EXT.	EXTERIOR	R.O.	ROUGH OPENING
F.A.	FIRE ALARM	S.C.	SOLID CORE
F.D.	FLOAT DIMENSION	SCHED.	SCHEDULE
F.E.F.	FIRE EXTINGUISHER CABINET	SF	SQUARE FEET
FIN.	FINISH	SIM	SIMILAR
F.H.C.	FIRE HOSE CABINET	SPEC.	SPECIFICATION
FLR.	FLOOR	SR.	SERVICE READINESS
FLASH.	FLASHING	S.S.	STAINLESS STEEL
FLOUR.	FLUORESCENT	S.T.C.	SOUND TRANSMISSION COEFFICIENT
F.O.F.	FACE OF FINISH	STD.	STANDARD
F.O.M.	FACE OF MASONRY	STL.	STEEL
F.O.S.	FACE OF STUDS	STOR.	STORAGE
F.R.T.	FIRE RETARDANT TREATED	STRL.	STRUCTURAL
GA.	GAUGE	SUSP.	SUSPENDED
GC.	GENERAL CONTRACTOR	SYM.	SYMMETRICAL
GYP.	GYPSUM	T.	TENANT
H.C.	HOLLOW CORE	TEMP.	TEMPERED
HDCP.	HANDICAP	THK.	THICK
HDW.	HARDWARE	T.O.	TOP OF
HT.	HEIGHT	T.O.C.	TOP OF CONCRETE
HORIZ.	HORIZONTAL	TYP.	TYPICAL
H.P.	HIGH POINT	U..N.	UNLESS OTHERWISE NOTED
HPC.	HIGH POWER CONNECTOR	U.S.	UNDERSIDE
HR.	HOUR	V	VENDOR
IN.	INCH	VERT.	VERTICAL
INSUL.	INSULATION	V.I.F.	VERIFY IN FIELD
INT.	INTERIOR	W.C.	WATER CLOSET
IT.	INFORMATION TECHNOLOGY	WD.	WOOD
JST.	JOIST	W.R.	WATER RESISTANT
JT.	JOINT	W/	WITH

PROPOSED
SALES, SERVICE & DELIVERY CENTER
ANN ARBOR, MI

3530 JACKSON ROAD
ANN ARBOR, MI 48103

INDEX OF DRAWINGS

GENERAL

A0.00	COVER SHEET

CIVIL

C-201	EXISTING SITE CONDITIONS PLAN
C-203	DEMOLITION PLAN
C-205	SITE LAYOUT PLAN
L-100	LANDSCAPE PLAN

ARCHITECTURAL

A1.01	SITE PLAN
A2.01	CONSTRUCTION AND FINISH PLAN
A4.01a	EXTERIOR ELEVATIONS
A4.01b	EXTERIOR ELEVATIONS, FINISH SCHEDULE & MATERIAL FINISHES
A5.01	EXTERIOR RENDERING
A5.02	EXTERIOR RENDERING

AREA MAP

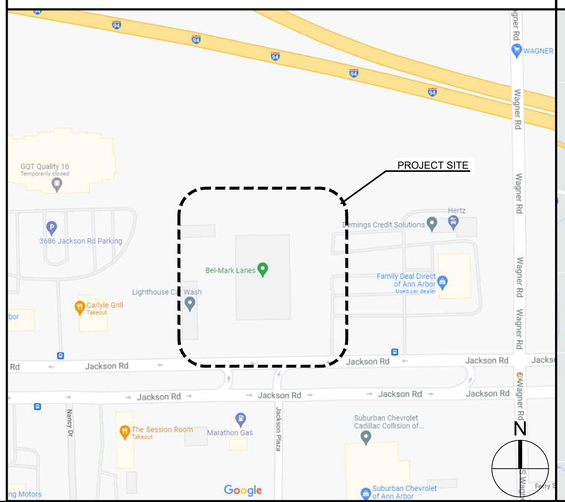

VICINITY MAP

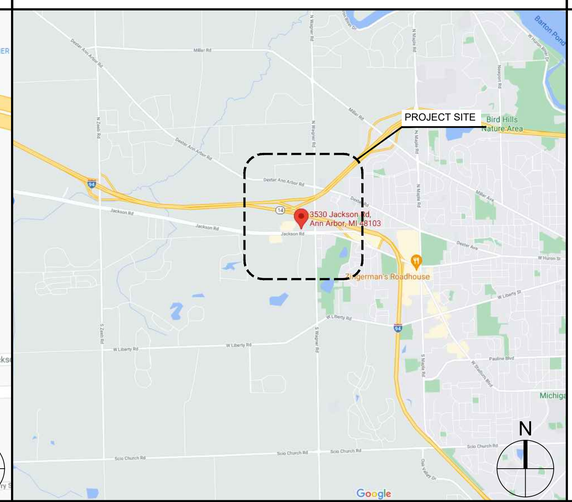

JROD DESIGN GUIDELINES - SEC. 36-76(f)

- FACADES GREATER THAN 100 FEET IN LENGTH, SHALL INCORPORATE PROJECTIONS OR RECESSES EXTENDING AT LEAST 20% OF THE LENGTH OF THE FACADE. NO UNINTERRUPTED LENGTH OF ANY FACADE SHALL EXCEED 100 HORIZONTAL FEET.
  - **PLEASE REVIEW 4/A4.01a FOR CALCULATION AND PROPOSED DESIGN FOR INCORPORATING PROJECTIONS/ RECESSES AT BUILDING FACADE.**
- GROUND FLOOR FACADES THAT FACE PUBLIC STREETS SHALL HAVE ARCADES, DISPLAY WINDOWS, ENTRY AREAS, AWNINGS, OR OTHER SUCH FEATURES ALONG NO LESS THAN 50% OF THEIR HORIZONTAL LENGTH. REAL WINDOWS ALLOWING DAYLIGHT IN THE BUILDING ARE ENCOURAGED.
  - **PLEASE REVIEW 4/A4.01a FOR CALCULATION AND PROPOSED DESIGN FOR INCORPORATING WINDOWS/ GLAZING THAT MEET THE 50% REQUIREMENT.**
- FLAT ROOFS SHALL HAVE PARAPETS CONCEALING EQUIPMENT FROM PUBLIC VIEW.
  - **PROJECT DOES NOT HAVE A FLAT ROOF, (E) ROOF IS SLOPED WITH NO EXISTING PARAPET AROUND THE BUILDING. PROPOSED PARAPET WALL AT FRONT FACADE WILL SCREEN RTUs FROM PUBLIC VIEW. PLEASE REFER TO 4/A4.01a.**
- PREDOMINANT BUILDING MATERIALS SHALL BE HIGH QUALITY MATERIALS, INCLUDING, BUT NOT LIMITED TO BRICK, STONE, ARCHITECTURAL STEEL AND GLASS, AND INTEGRALLY TINTED/TEXTURED CONCRETE MASONRY UNITS.
  - **IN ORDER TO MAINTAIN THE STRUCTURAL INTEGRITY OF THE EXISTING PRE-ENGINEERED BUILDING, EIFS IS PROPOSED AS A VIABLE OPTION TO NOT ADD ADDITIONAL STRUCTURAL LOADS TO THE FRONT FACADE. MATERIALS SUCH AS BRICK, STONE, STEEL AND CONCRETE MASONRY WOULD REQUIRE EXTENSIVE RE-WORK TO THE FACADE AND WILL NOT BE STRUCTURALLY FEASIBLE WITHOUT ADDING AN EXTENSIVE AMOUNT OF STRUCTURAL SUPPORTS WHICH COULD POTENTIALLY BE DETRIMENTAL TO THE PROPOSED DESIGN.**
- ALL FACADE COLORS AND SYSTEMS SHALL BE REVIEWED AND APPROVED BY THE PLANNING COMMISSION.
  - **PLEASE SEE SHEET A4.01b FOR LISTED COLOR SPECIFICATIONS AND DIGITAL SAMPLES.**
- EACH PRINCIPAL BUILDING ON THE SITE SHALL HAVE CLEARLY DEFINED, HIGHLY VISIBLE ENTRANCES FEATURING NO LESS THAN THREE OF THE FOLLOWING: CANOPIES OR PORTICOS; OVERHANGS; RECESS/PROJECTION, ARCADES, RAISED CORNICED PARAPETS OVER THE DOOR, PEAKED ROOF FORMS, ARCHES, OUTDOOR PATIOS, DISPLAY WINDOWS, ARCHITECTURAL DETAILS SUCH AS TILE WORK AND MOLDINGS WHICH ARE INTEGRATED INTO THE BUILDING STRUCTURE AND DESIGN, INTEGRAL PLANTERS OR WING WALLS THAT INCORPORATE LANDSCAPE AREAS AND/OR PLACES FOR SITTING AND SPECIAL PAVEMENT.
  - **PLEASE REVIEW 4/A4.01a FOR PROPOSED DESIGN FEATURES AT FRONT ENTRY FACADE WHICH INCORPORATES RECESS/PROJECTION, DISPLAY WINDOWS/STOREFRONT GLAZING, AND RED CANOPY PORTAL WHICH SERVES AS A PROMINENT DESIGN FEATURE FOR THE ENTRY INTO THE BUILDING.**

REFERENCE SYMBOLS

#	KEYNOTE
#	COLUMN BUBBLE AND GRID
	DATUM POINT
	CUT LINE
℄	CENTER LINE SYMBOL
	ELEVATIONS
	ELEVATION
	SECTION

ID X'-X" A.F.F.	CEILING TYPE AND HEIGHT
#	WALL TYPE
XXX	DOOR NUMBER
X XX	FIXTURE / EQUIPMENT TYPE
FINISH	FINISH TAG
	PLAN DETAIL
ROOM	ROOM NAME
	SECTION DETAIL
ALIGN	ALIGN

CODE / PROJECT INFORMATION

AUTHORITY HAVING JURISDICTION: TOWNSHIP OF SCIO, MICHIGAN & WASHTENAW COUNTY

BUILDING CODE:	MICHIGAN BUILDING CODE	2015
ELECTRICAL CODE:	MICHIGAN ELECTRICAL CODE NEC WITH STATE PART 8	2017
PLUMBING CODE:	MICHIGAN PLUMBING CODE	2015
MECHANICAL CODE:	MICHIGAN MECHANICAL CODE	2015
ENERGY CODE:	MICHIGAN ENERGY CODE	2015
FIRE CODE:	NFPA 1, FIRE PREVENTION CODE	2000
ACCESSIBILITY CODE:	ICC/ANSI 117.1	2009

TOTAL BUILDING AREA: 35,450 SF

TOTAL PROPERTY AREA: 7.06 ACRES

OCCUPANCY GROUP: COMMERCIAL

CONSTRUCTION TYPE: II-A

SPRINKLERED: YES

FIRE ALARM: YES

ZONING USE: C-4 - COMPOSITE COMMERCIAL

PROJECT SCOPE / NOTES

PROPOSED REDESIGN AND USE OF THE EXISTING 35,450 SF BUILDING LOCATED AT 3530 JACKSON RD, ANN ARBOR, MI 48103 AS A SHOWROOM AND VEHICLE SERVICE FACILITY. CARS ARE NOT GAS POWERED. THE PROPOSED PROJECT CONSISTS OF FULLY REMODELING THE EXISTING BUILDING INTO A SALES, SERVICE AND DELIVERY CENTER .

WORK INCLUDES: PARTITION AND CEILING MODIFICATIONS, MILLWORK PAINTING, ELECTRIC AND LIGHTING MODIFICATIONS FOR EQUIPMENT, PLUMBING FOR MISC. ITEMS, INSTALLATION OF NEW ELECTRIC VEHICLE CHARGING EQUIPMENT, FOOTINGS FOR NEW CAR LIFTS, AND NEW EXTERIOR SIGNAGE. NO CHANGE TO EXISTING BUILDING FOOTPRINT AND/OR SQUARE FOOTAGE.

GENERAL NOTES

- DEBRIS SHALL NOT BE BURIED ON THE SUBJECT SITE. ALL UNSUITABLE MATERIALS AND DEBRIS SHALL BE DISPOSED OF IN ACCORDANCE WITH ALL LOCAL TOWN, COUNTY, STATE, AND FEDERAL LAWS AND APPLICABLE CODES.
- ANY BROKEN OR HAZARDOUS EXISTING SIDEWALK, DRIVEWAY APRONS AND CURBING ADJACENT TO AND ON THE SUBJECT SITE SHALL BE REPLACED IN ACCORDANCE WITH CURRENT STANDARDS.

PROJECT DIRECTORY

TENANT
TESLA, INC.
901 PAGE AVENUE
FREMONT, CA 94538

AAKANKSHA BISHNOI
SR. DESIGN MANAGER
T: 551-238-8707
E: abishnoi@tesla.com

HEATHER MACFIE
CONSTRUCTION MANAGER
E: hmacfie@tesla.com

ARCHITECT
CHIPMAN DESIGN ARCHITECTURE, INC.
1350 EAST TOUHY AVENUE, 1ST FLOOR EAST
DES PLAINES, IL 60018
T: 847-298-6900
PROJECT MANAGER: ABDUL ALI
E: aali@chipman-design.com

STRUCTURAL ENGINEER
MCCOMAS / O'DONNELL & NACCARATO
STRUCTURAL ENGINEERS
1717 EAST 116TH STREET, SUITE 200
CARMEL, IN 46032
T: 317-249-4792
E: satmar@o-n.com
CONTACT: SABER ATMAR

LANDLORD
SIMBO PROPERTIES, INC.
T: 216-316-0677
E:mark@simboproperties.com
CONTACT: Mark Sims

MEP ENGINEER
M ENGINEERING
750 BROOKSEDGE BLVD.
WESTERVILLE, OH 43081
T: 614-839-4639
E: lmackey@mengineering.us.com
CONTACT: LARRY MACKEY

TESLA

CHIPMAN DESIGN ARCHITECTURE INC
1350 E TOUHY AVE
FIRST FLOOR EAST
DES PLAINES, IL 60018
PHONE: 847.298.6900

I HEREBY CERTIFY THAT THESE PLANS HAVE BEEN PREPARED UNDER MY SUPERVISION AND THAT TO THE BEST OF MY KNOWLEDGE, THE SAME COMPLY WITH ALL RULES, REGULATIONS AND ORDINANCES OF SCIO TOWNSHIP, MI RELATING TO STRUCTURES AND BUILDINGS.

TESLA - ANN ARBOR

3530 JACKSON RD
ANN ARBOR, MI, 48103

ISSUE / REVISION

10.25.21	SITE PLAN REVIEW SUBMITTAL
11.24.21	SCIO TOWNSHIP REVIEW

DRAWING TITLE

COVER SHEET

SCALE: AS NOTED
PROJECT NUMBER: 21-2409.00

SHEET NUMBER

A0.00

© COPYRIGHT 2019 TESLA MOTORS, INC. ALL RIGHTS RESERVED. PROPRIETARY AND CONFIDENTIAL BUSINESS INFORMATION

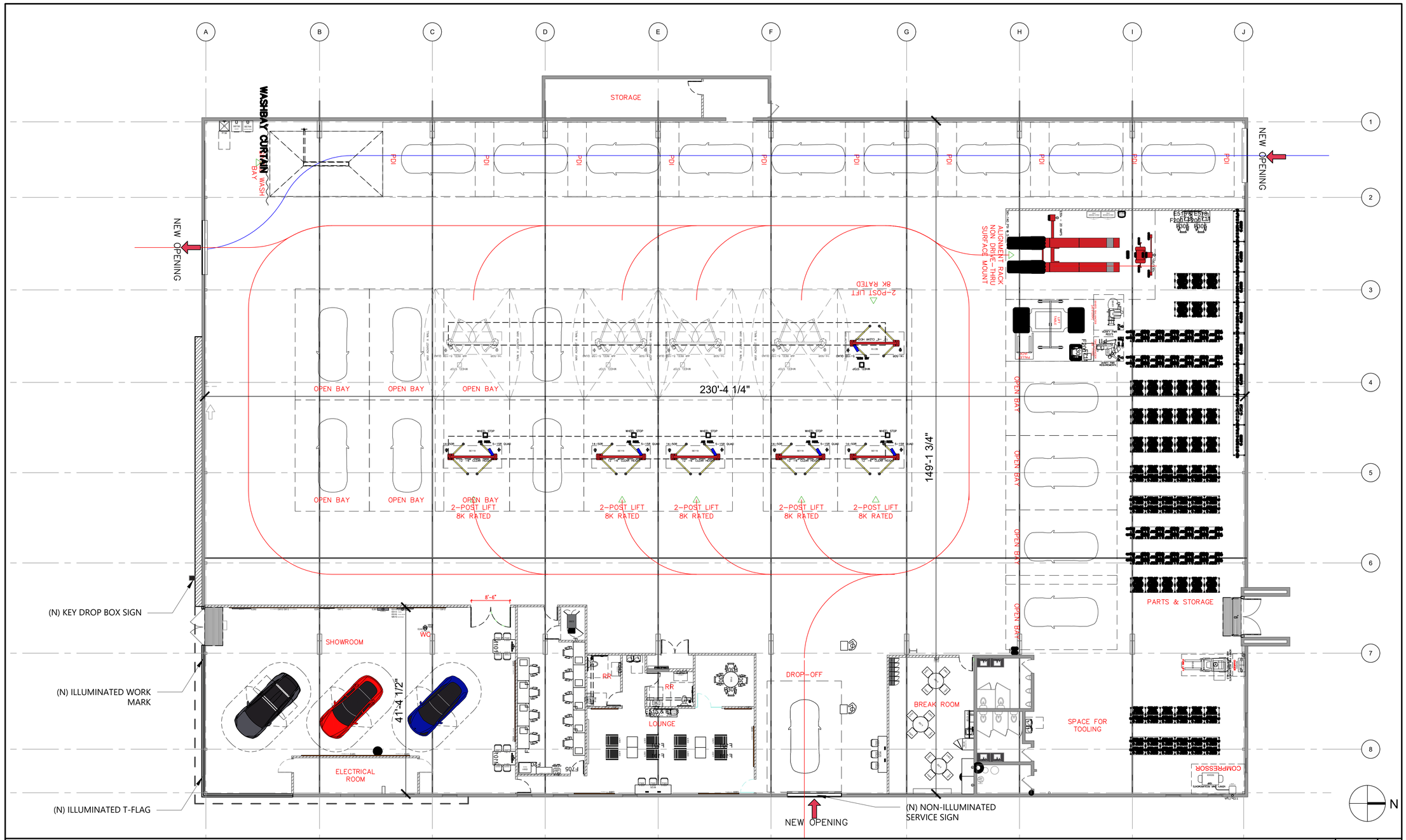

FIRST FLOOR PLAN | SCALE: 3/32" = 1'-0" | 1

LEGEND

- (E) CONSTRUCTION TO REMAIN. G.C. TO PATCH AND REPAIR AS REQUIRED TO "LIKE-NEW" CONDITION.
- NEW PARTITION
- EXISTING DOOR & FRAME
- NEW DOOR & FRAME

WORKBAY COUNT

POST LIFTS	6
FUTURE POST LIFTS	4
SCISSOR LIFTS	0
OPEN BAYS (SERVICE)	10

SPECIAL CONDITIONS

- (N) WASHBAY
- (N) OIL/ SAND SEPARATOR
- (N) GARAGE DOOR ENTRANCE
- (N) CUSTOMER RESTROOMS
- ELECTRICAL UPGRADE BY LL
- (9) WC & (1) SC

AREA BREAKDOWN (SF):

FIRST FLOOR	35,450 SF	
GROSS TOTAL*:	**35,450** SF	*NO CHANGE
SERVICE SHOP:	20,662 SF	
PARTS AND STORAGE:	4,180 SF	
LOUNGE:	1,187 SF	
BOH:	1,504 SF	
SHOWROOM:	2,904 SF	
DELIVERY:	4,494 SF	
UNBUILT/OTHER:	0 SF	
NET TOTAL:	**33,577** SF	

© COPYRIGHT 2019 TESLA MOTORS, INC. ALL RIGHTS RESERVED. PROPRIETARY AND CONFIDENTIAL BUSINESS INFORMATION

TESLA

CHIPMAN DESIGN ARCHITECTURE INC
1350 E TOUHY AVE
SUITE 270W EAST
DES PLAINES, IL 60018
PHONE 847.298.6900

I HEREBY CERTIFY THAT THESE PLANS HAVE BEEN PREPARED UNDER MY SUPERVISION AND THAT TO THE BEST OF MY KNOWLEDGE, THE SAME COMPLY WITH ALL RULES, REGULATIONS AND ORDINANCES OF SCIO TOWNSHIP, MI RELATING TO STRUCTURES AND BUILDINGS.

TESLA - ANN ARBOR

3530 JACKSON RD
ANN ARBOR, MI, 48103

ISSUE / REVISION

10.25.21	SITE PLAN REVIEW SUBMITTAL
11.24.21	SCIO TOWNSHIP REVIEW

DRAWING TITLE

FURNITURE FIXTURE EQUIPMENT & SIGNAGE PLAN

SCALE: AS NOTED
PROJECT NUMBER: 21-2409.00

SHEET NUMBER

A2.02

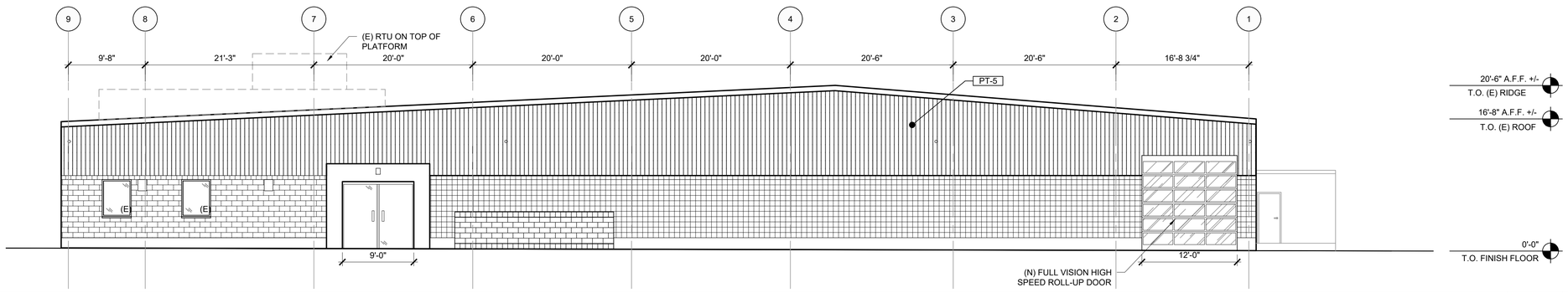

NORTH EXTERIOR ELEVATION | SCALE: 1/8" = 1'-0" | 1

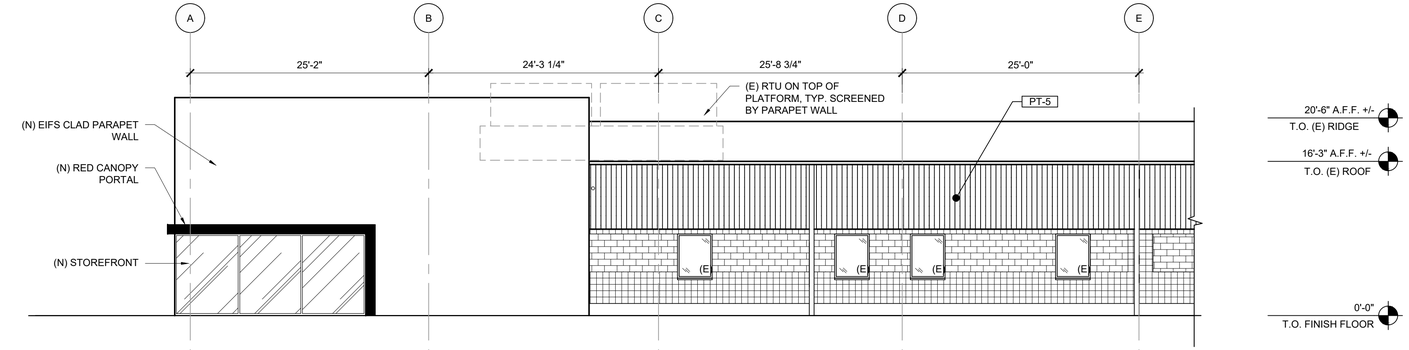

EAST(a) EXTERIOR ELEVATION | SCALE: 1/8" = 1'-0" | 2

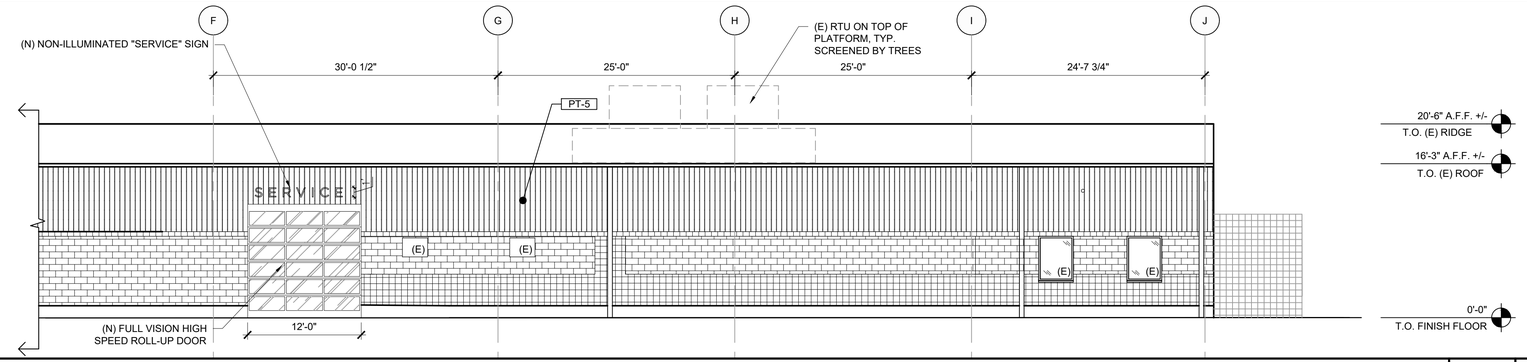

EAST(b) EXTERIOR ELEVATION | SCALE: 1/8" = 1'-0" | 3

CALCULATION FOR INCORPORATING PROJECTIONS OR RECESSES:
LENGTH OF FACADE = 150'-5"
PORTION OF FACADE TO HAVE PROJECTIONS/RECESSES = 20%
PROJECTION/RECESS NEEDED = 150'-5" x 20% = 30'-1"
PROJECTION/RECESS PROPOSED = 97'-5"

CALCULATIONS FOR INCORPORATING DISPLAY WINDOWS OR GLAZING:
LENGTH OF FACADE = 150'-5"
PORTION OF FACADE TO HAVE WINDOWS/GLAZING = 50%
LENGTH OF WINDOWS/GLAZING NEEDED = 150'-5" x 50% = 75'-2 ½ "
LENGTH OF WINDOWS/GLAZING PROPOSED = 75'-6"

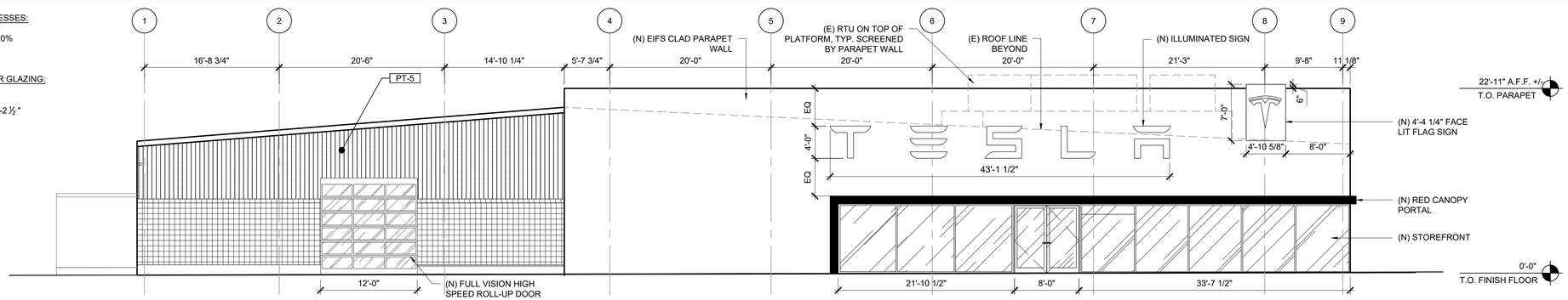

SOUTH EXTERIOR ELEVATION | SCALE: 1/8" = 1'-0" | 4

© COPYRIGHT 2019 TESLA MOTORS, INC. ALL RIGHTS RESERVED. PROPRIETARY AND CONFIDENTIAL BUSINESS INFORMATION

CHIPMAN DESIGN ARCHITECTURE INC
1350 E TOUHY AVE
SUITE 270W EAST
DES PLAINES, IL 60018
PHONE: 847.298.4900

I HEREBY CERTIFY THAT THESE PLANS HAVE BEEN PREPARED UNDER MY SUPERVISION AND THAT TO THE BEST OF MY KNOWLEDGE, THE SAME COMPLY WITH ALL RULES, REGULATIONS AND ORDINANCES OF ANN ARBOR,MI RELATING TO STRUCTURES AND BUILDINGS.

TESLA - ANN ARBOR

3530 JACKSON RD
ANN ARBOR, MI, 48103

ISSUE / REVISION

10.25.21	SITE PLAN REVIEW SUBMITTAL
11.24.21	SCIO TOWNSHIP REVIEW

DRAWING TITLE

EXTERIOR ELEVATIONS

SCALE: AS NOTED
PROJECT NUMBER: 21-2409.00

SHEET NUMBER

A4.01a

PT1 "NEON RED"
BM - 2087 - 10

METAL PORTAL TO MATCH PT1

PT5 "TROUT GREY"
BM - 2124 - 20

PART NO.	ITEM DESCRIPTION	VENDOR	VENDOR ID	FINISH	REMARKS
PAINT FINISHES					
PT-5	PAINT	BENJAMIN MOORE	BM 2124-20 "TROUT GRAY"	SEE SPECS	VERIFY WITH REPRESENTATIVE EXACT LOCATIONS IN FIELD INTERIOR: FLAT MATTE, EGGSHELL PEARL/SATIN EXTERIOR: FLAT LOW LUSTRE, SOFT GLOSS/SATIN SEMI GLOSS

ILLUMINATED SIGN SIZE:

H x W: 4'-0" x 43'-1 1/12"
SQ. FT.: 172.50

FACE LIT SIGN SIZE:

H x W: 7'-0" x 4'-10 5/8"
SQ. FT.: 34.20

MONUMENT SIGN SIZE:

H x W: 15'-0" x 6'-6"
SQ. FT.: 97.50

SCALE:

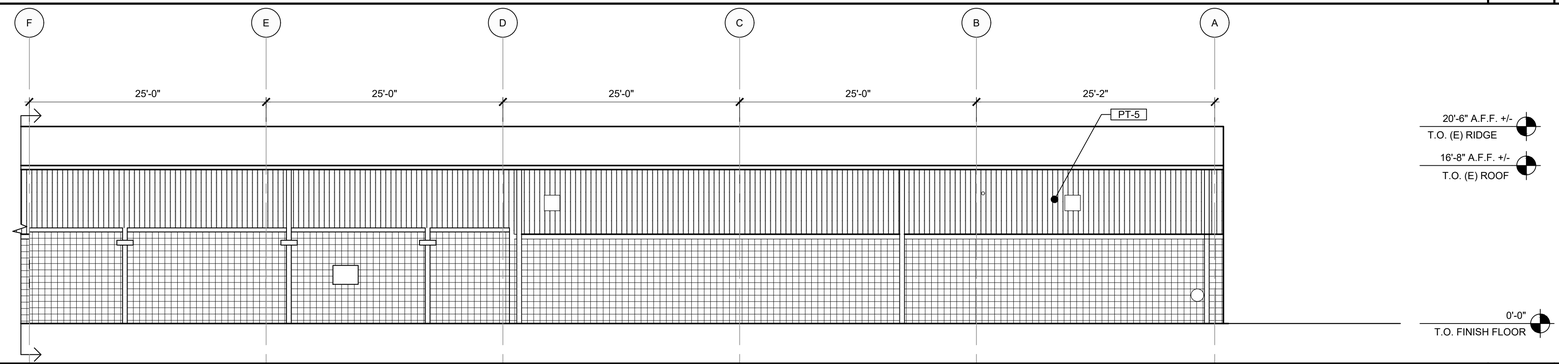

WEST(b) EXTERIOR ELEVATION — SCALE: 1/8" = 1'-0" — 6

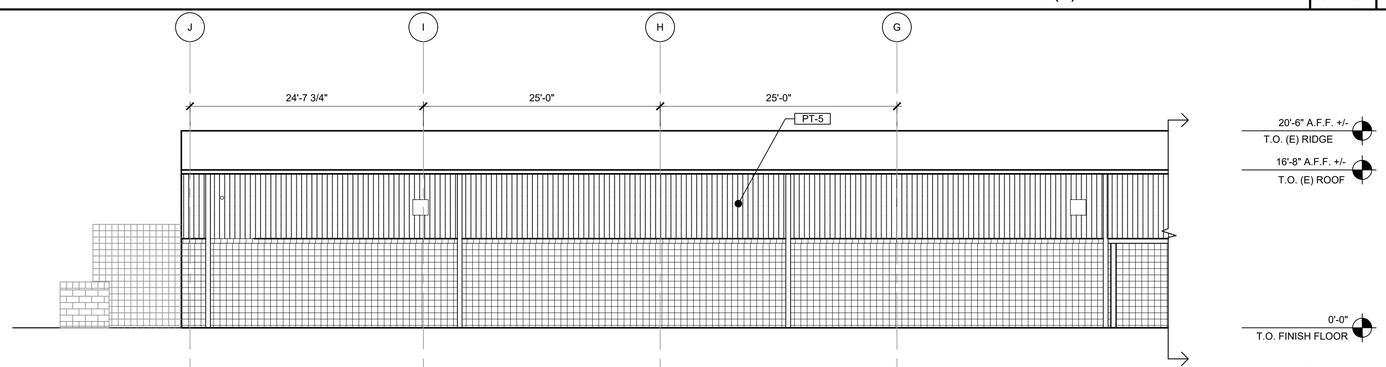

WEST(a) EXTERIOR ELEVATION — SCALE: 1/8" = 1'-0" — 5

© COPYRIGHT 2019 TESLA MOTORS, INC. ALL RIGHTS RESERVED. PROPRIETARY AND CONFIDENTIAL BUSINESS INFORMATION

CHIPMAN DESIGN ARCHITECTURE INC
1350 E TOUHY AVE
FIRST FLOOR EAST
DES PLAINES, IL 60018
PHONE: 847.298.4900

I HEREBY CERTIFY THAT THESE PLANS HAVE BEEN PREPARED UNDER MY SUPERVISION AND THAT TO THE BEST OF MY KNOWLEDGE, THE SAME COMPLY WITH ALL RULES, REGULATIONS AND ORDINANCES OF ANN ARBOR,MI RELATING TO STRUCTURES AND BUILDINGS.

TESLA - ANN ARBOR

3530 JACKSON RD
ANN ARBOR, MI, 48103

ISSUE / REVISION

10.25.21	SITE PLAN REVIEW SUBMITTAL
11.24.21	SCIO TOWNSHIP REVIEW

DRAWING TITLE

EXTERIOR ELEVATIONS, FINISH SCHEDULE & MATERIAL FINISHES

SCALE: AS NOTED
PROJECT NUMBER: 21-2409.00

SHEET NUMBER

A4.01b



FRONT VIEW

© COPYRIGHT 2019 TESLA MOTORS, INC. ALL RIGHTS RESERVED. PROPRIETARY AND CONFIDENTIAL BUSINESS INFORMATION

TESLA

CHIPMAN DESIGN ARCHITECTURE INC
1350 E TOUHY AVE
SUITE 310 EAST WING
DES PLAINES, IL 60018
PHONE: 847.298.6900

I HEREBY CERTIFY THAT THESE PLANS HAVE BEEN PREPARED UNDER MY SUPERVISION AND THAT TO THE BEST OF MY KNOWLEDGE, THE SAME COMPLY WITH ALL RULES, REGULATIONS AND ORDINANCES OF ANN ARBOR,MI RELATING TO STRUCTURES AND BUILDINGS.

TESLA - ANN ARBOR

3530 JACKSON RD
ANN ARBOR, MI, 48103

ISSUE / REVISION

10.25.21	SITE PLAN REVIEW SUBMITTAL
11.24.21	SCIO TOWNSHIP REVIEW

DRAWING TITLE

EXTERIOR RENDERING

SCALE:
PROJECT NUMBER: 21-2409.00

SHEET NUMBER

A5.01



CORNER VIEW

© COPYRIGHT 2019 TESLA MOTORS, INC. ALL RIGHTS RESERVED. PROPRIETARY AND CONFIDENTIAL BUSINESS INFORMATION

TESLA

CHIPMAN DESIGN ARCHITECTURE INC
1350 E TOUHY AVE
FIRST FLOOR EAST
DES PLAINES, IL 60018
PHONE: 847.298.6900

I HEREBY CERTIFY THAT THESE PLANS HAVE BEEN PREPARED UNDER MY SUPERVISION AND THAT TO THE BEST OF MY KNOWLEDGE, THE SAME COMPLY WITH ALL RULES, REGULATIONS AND ORDINANCES OF ANN ARBOR,MI RELATING TO STRUCTURES AND BUILDINGS.

TESLA - ANN ARBOR

3530 JACKSON RD
ANN ARBOR, MI, 48103

ISSUE / REVISION

10.25.21	SITE PLAN REVIEW SUBMITTAL
11.24.21	SCIO TOWNSHIP REVIEW

DRAWING TITLE

EXTERIOR RENDERING

SCALE:
PROJECT NUMBER: 21-2409.00

SHEET NUMBER

A5.02

To: Chairpersons and Secretaries of the Board of Trustees, Board of Review, Budget and Finance Committee, Compensation Commission, Downtown Development Authority, Election Commission, Land Preservation Commission, Parks and Recreation Advisory Board, Planning Commission, Roads Advisory Committee, Sustainability Task Force, Transportation Alternatives Planning Committee, Zoning Board of Appeals, Zoning Ordinance Amendment Committee

CC: Kristy Aiken, Office Coordinator; Frances Szuma, Administrative Clerk; Mary Gillis, Deputy Clerk; David Rowley, Administrator

From: Jessica Flintoft, Clerk

Re: Guidelines for Committee Procedures for Meetings in 2022

Date: December 1, 2021

This memo sets forth key guidelines for each Township board or committee's consideration and adoption of meeting procedures for all meetings for January 1, 2022 forward.

Procedures

At this month's committee meetings, I suggest that each committee adopt a set of procedures for all meetings to be held in 2022. Your procedures may be detailed, or they may be as simple as what I suggest here: "All meetings will be held in Meeting Hall. The public may join in person or via remote participation by Zoom or phone."

Whatever approach, here are the current key legal and operational guidelines to consider, especially since we remain at very high transmission levels of COVID-19 and the emergence of the new omnicron variant.

Meeting Location

Beginning January 1, 2022, no fully remote meetings are permitted under the Open Meetings Act.

Therefore, I suggest that committees name the meeting location on regular meeting agendas and public schedules as "Meeting Hall, 827 North Zeeb Road, with option for remote participation by public."

Kristy Aiken and I will be working to configure Meeting Hall to allow for as much physical distancing as possible, and to set up the microphones with the expectation that all members will be speaking through masks.

If you or others would like additional training or practice using Zoom on the designated laptop in Meeting Hall, please schedule with Kristy Aiken. Please remember to use only the Township Zoom account she has assigned to your committee.

For assistance scheduling meeting spaces for special meetings, please contact Kristy Aiken or Fran Szuma.

Public Participation

The public has a right to attend all meetings, closed sessions excepted. The Open Meetings Act has never limited the remote participation of the public, only that of members. On June 22, 2021, the Township Board adopted

Resolution 2021-21 to Resume In-Person Township Meetings. The Resolution permits the remote participation of the public for any reason, indefinitely, in Board meetings.

It encourages committees to adopt procedures that do the same. By so doing, there remains no requirement for a request for accommodation, pre-registration, or other barrier to remote participation in Township meetings.

The public has a right to attend all meetings in person as well. The committee may not impose limits on the number of public who may attend, and may not require that the public in attendance wear a mask or show proof of vaccination.

Ensuring that the public knows that they may choose to join remotely is a good way to maximize participation without overcrowding Meeting Hall. Asking staff or consultants or other presenters who might effectively join remotely would also be a good practice.

Members of the public may choose to join in person or remotely. I suggest planning ahead on if you will use audio and video, or just audio. I find that if there are not dozens of public in attendance, that turning on video of public is a nice way to feel more connected. With higher numbers of public in attendance, I have found the video difficult to manage efficiently. Others may know how to do so.

Member Participation

Beginning January 1, 2022, members of committees must participate in person. The only exception is for members who are actively deployed military members[1].

Prior to the pandemic hitting, members had always been required to join in person in order to participate in a committee. And, beginning January 1st the Open Meetings Act is re-imposing that longstanding requirement.

Be sure to verify with members that the standing regular day and time of your meetings works for all, given that they will be required to commute to Township Hall.

Because members are required to again participate in person, votes may again be taken by voice vote not by roll call vote, unless otherwise required by law or requested by a member.

If a member of a committee calls in to a meeting via phone or Zoom, they are not considered present, thus not counting towards quorum and are not permitted to vote.

If you have a member who resigns, please email clerk@sciotownship.org so that we can update all records and ensure the new appointment process is underway.

[1] If any committees have members who are actively deployed military members, please contact the Clerk for guidance on additional procedures that must be implemented by the committee. This memo does not cover these.

Agendas, Materials, Minutes, Video Recordings

Please place these instructions at top or on other prominent place on each meeting Agenda so that everyone may have equal opportunity to join and participate.

> The Township [Name of Committee] will meet in Meeting Hall at Township Hall at 827 N. Zeeb Road. Members of the public may join either in person, or via Zoom at [hyperlink and full address directly to Zoom Meeting link] or http://zoom.us and entering Meeting ID [Zoom Meeting Number] or by calling 1 [closest domestic Zoom phone number] and entering Meeting ID [Zoom Meeting Number].
>
> Persons with disabilities requiring any accommodation for participation in this meeting should contact the Township Clerk at (734) 369-9400 or clerk@sciotownship.org.

Please continue to send Agendas, Materials, Draft Minutes and/or Approved Minutes to Kristy Aiken for posting on website as you currently do. She or Fran will make sure a hard copy of each Agenda is posted in public box outside Meeting Hall.

The Board of Trustees approved the purchase of the Granicus video component which will allow for semi automated minute taking, transcription and closed captioning, video recording and posting, and other features. NetSmart, Granicus, Kristy, and I are working together to implement this. It will be in the first quarter of 2022, and we will be rolling this out one committee at a time. Thank you all for replying to the survey to inform the purchase and how we will implement.

Please contact Kristy or me if you have any questions. Thanks!

Thank you for joining Road Funding 101!

The presentation will begin shortly.

Tips

- You will be muted as you enter the meeting, feel free to turn on your video if you want to.
- If you would like to ask a question during Q and A:
  - *On your computer or smart phone*: Join audio then click "participants" at the bottom of screen and select "raise hand."

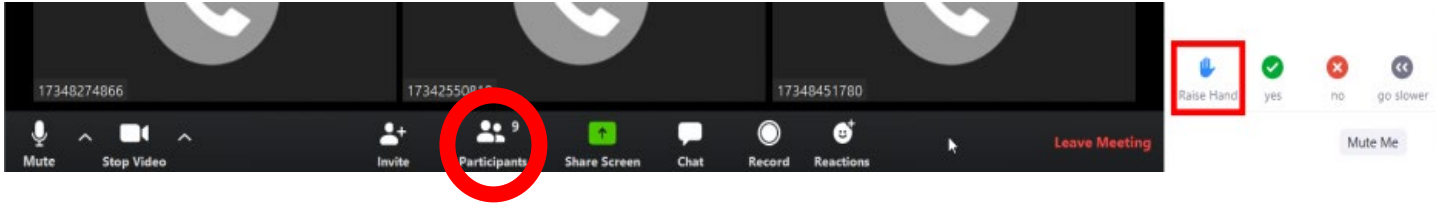

  - *On your touchtone phone*: Dial *9
  - The meeting host will unmute you when it is your turn to ask a question

Road Funding 101

January 27 and 28, 2021









COUNTY ROAD WASHTENAW COMMISSION

@Washtenawroads

Introductions



Sheryl Soderholm Siddall
Managing Director



Matt MacDonell
County Highway Engineer
Director of Engineering

Introductions



Jim Harmon
Director of Operations



Dan Ackerman
Director of Finance and IT

Housekeeping



Meeting audio and video is being recorded and will be emailed to the group.



You will be asked to virtually “raise your hand” during Q and A



Chat is enabled

Topics to Cover

- Overview of WCRC
- Jurisdictions
- Funding
- Partnerships
- Ways to contact us



OVERVIEW OF WCRC

Overview

- Independent agency founded in 1919
- Governed by 5 Road Commissioners
  - Appointed by County Commissioners
- ~130 employees



Mission

- WCRC is responsible for maintaining a road system that is **reasonably safe and convenient** to the traveling public.

The Board



Barbara Ryan Fuller
Chair



Rodrick Green
Vice Chair

The Board



Douglas Fuller
Member



Gloria Llamas
Member



Jo Ann McCollum
Member

WCRC Stats

- Responsible for:
  - 1,653 miles of county road
    - (766 miles unpaved)
  - 115 bridges
  - 2,500+ culverts
  - 31,000 signs
- Contracted to maintain 598 lane miles of MDOT routes (US 23, I-94, M-14, US-12, etc.)

Routine Maintenance

- Snow and ice removal
- Storm clean-up
- Pothole patching
- Drainage
- Grading
- Signs and signals
- Culvert/bridge maintenance



Construction and Preservation

- Surface preservation
- Projects
  - Resurfacing
  - Reconstruction
  - Intersections





JURISDICTIONS

Whose Road Is It?

- MDOT
- County road commissions
- Cities and villages
- Private roads

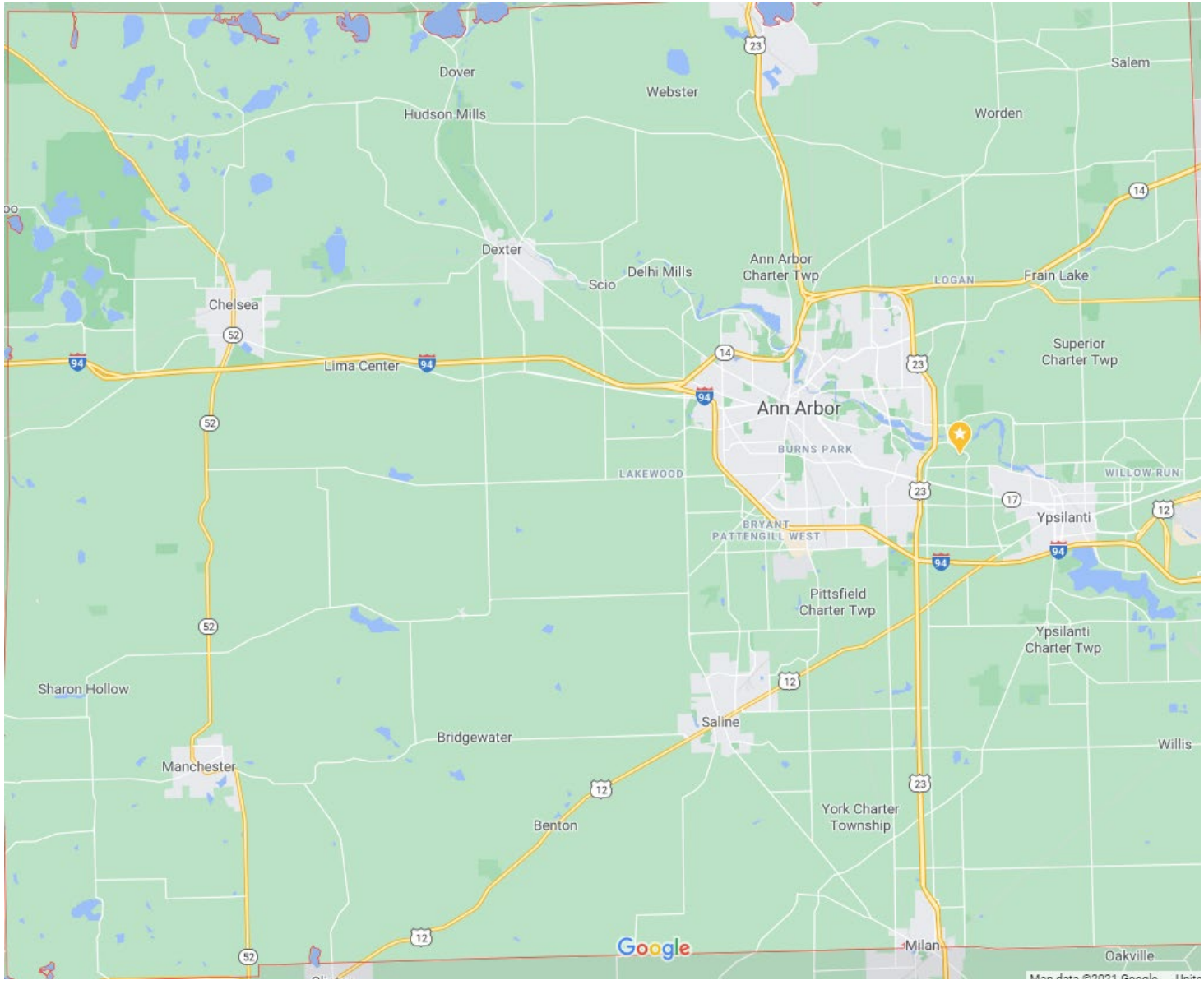
Dover
Webster
Hudson Mills
Salem
Worden
Dexter
Scio
Delhi Mills
Ann Arbor Charter Twp
LOGAN
Frain Lake
Chelsea
Superior Charter Twp
Lima Center
Ann Arbor
BURNS PARK
LAKEWOOD
WILLOW RUN
Ypsilanti
BRYANT
PATTENGILL WEST
Pittsfield Charter Twp
Ypsilanti Charter Twp
Sharon Hollow
Saline
Bridgewater
Willis
Manchester
York Charter Township
Benton
Milan
Oakville
Google

County Roads

- Classified into 2 types of roads
  - Primary roads
  - Local roads

Classification is determined at the state-level as outlined in Act 51 of 1951.

County Roads

- **Primary roads** connect communities
  - 593 miles in Washtenaw County (76 unpaved)
  - Examples: Jackson Rd, Saline-Milan Rd, Pontiac Trail



County Roads

- **Local roads** connect people to their homes, including subdivision roads
  - 1,060 miles in Washtenaw County (690 miles unpaved)

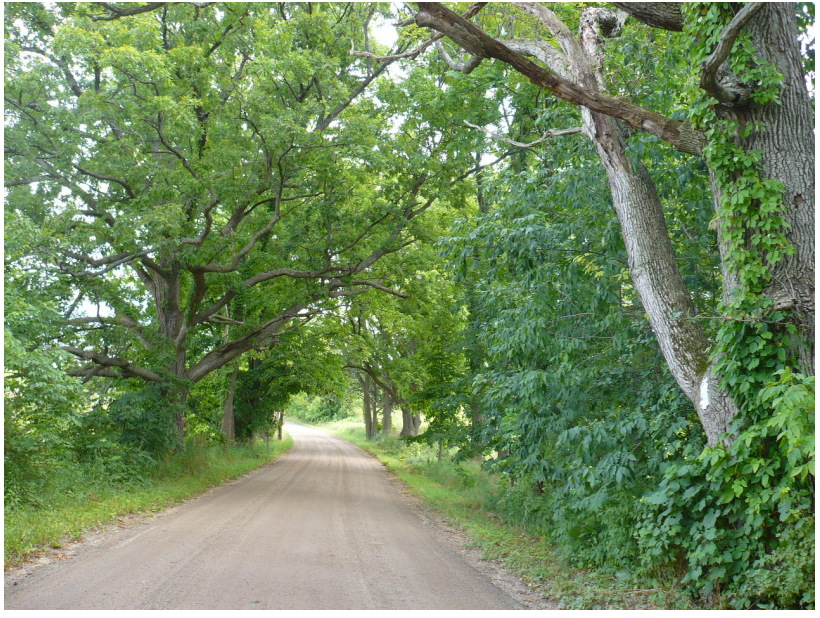

Federal Classification

- Roads are also classified by the Federal Highway Administration
  - Federal-aid eligible roads
    - Both rural and urban areas

Federal classification is unrelated to Act 51 (state) designation

Resources

- WCRC certification maps
- SEMCOG road jurisdiction map

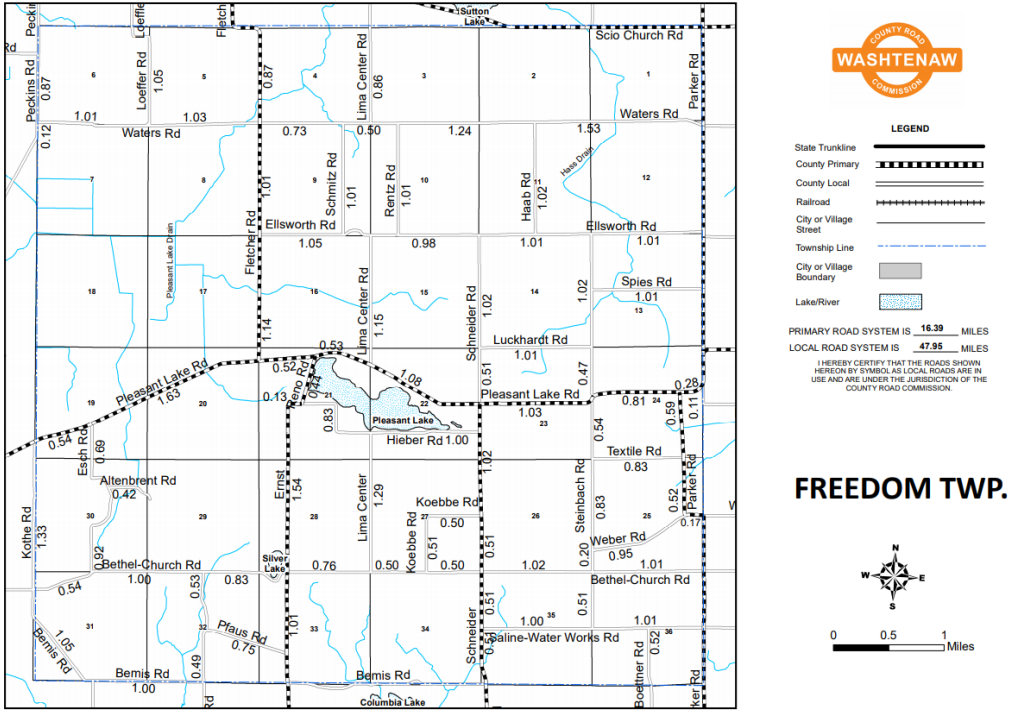



FUNDING SOURCES

Complicated Questions

- “I pay my taxes, why do my roads stink?!”



WCRC Revenues

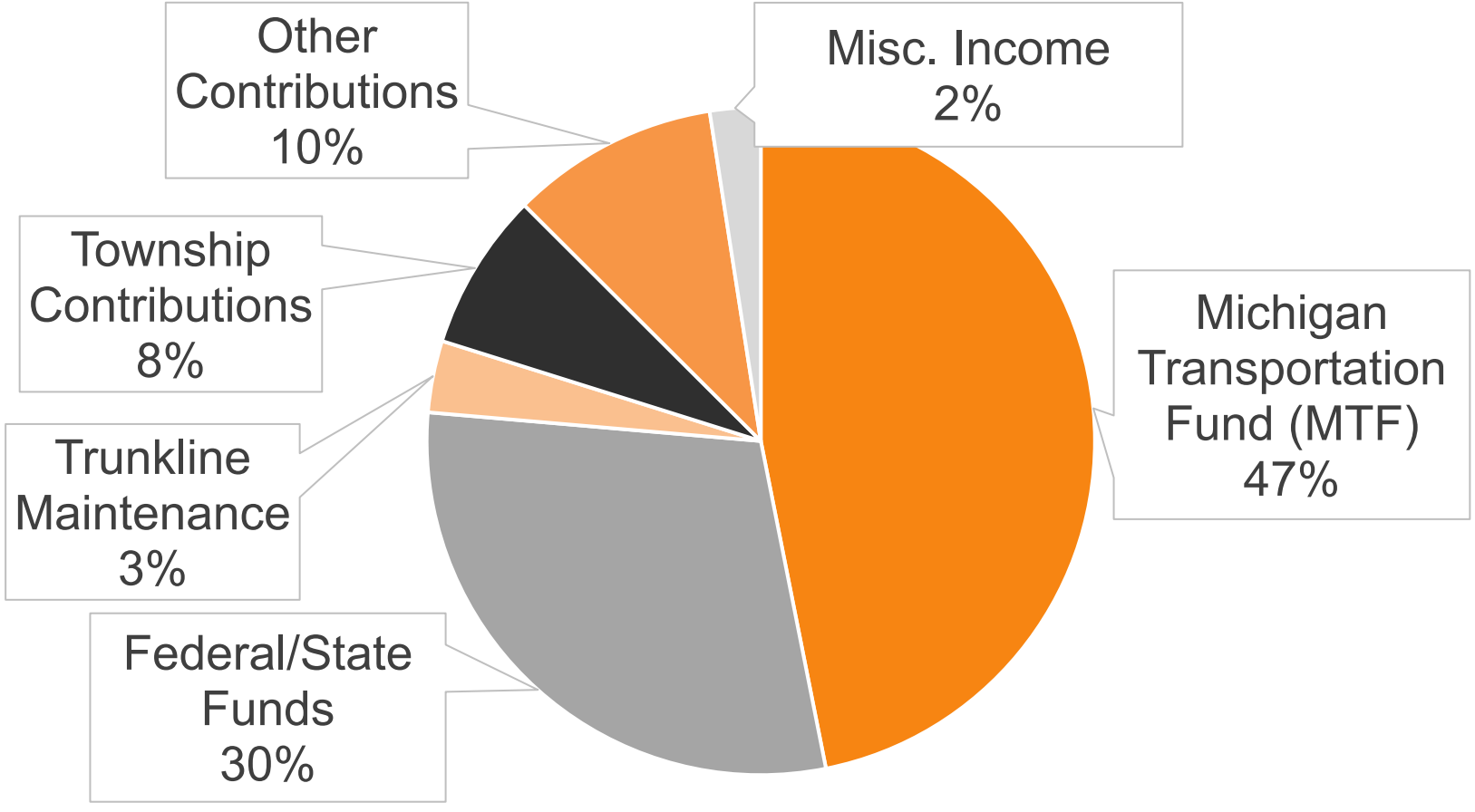

Sources

- Michigan Transportation Fund (MTF)
  - State fuel taxes
  - State license and registration fees

MTF

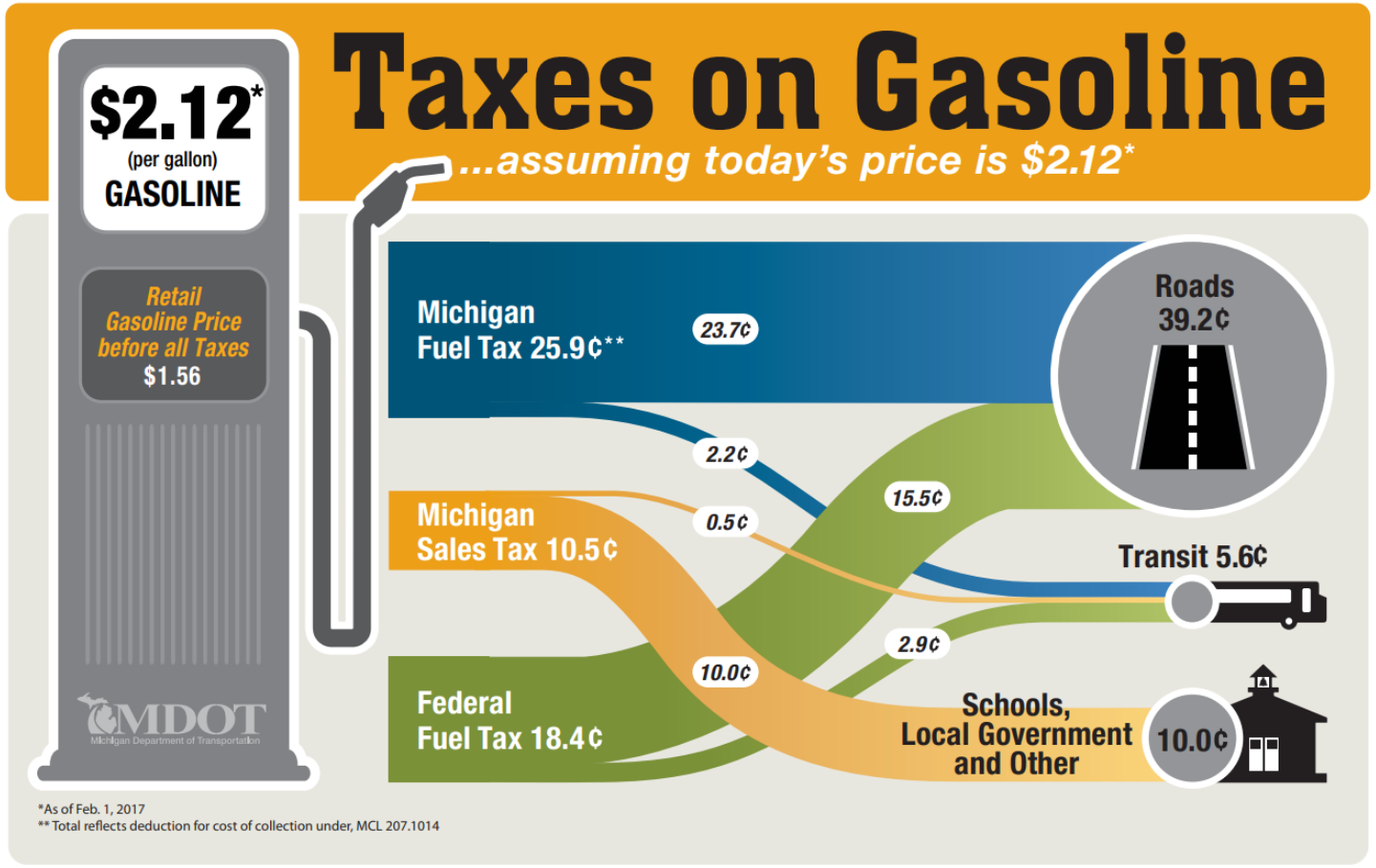
Taxes on Gasoline
...assuming today's price is $2.12*
$2.12*
(per gallon)
GASOLINE
Retail Gasoline Price before all Taxes
$1.56
MDOT
Michigan Department of Transportation
Michigan Fuel Tax 25.9¢**
23.7¢
2.2¢
Michigan Sales Tax 10.5¢
0.5¢
Federal Fuel Tax 18.4¢
10.0¢
15.5¢
2.9¢
Roads 39.2¢
Transit 5.6¢
Schools, Local Government and Other
10.0¢
*As of Feb. 1, 2017
** Total reflects deduction for cost of collection under, MCL 207.1014

Other Sources

- Federal-aid
- Property taxes
  - Voter-approved county-wide millage
  - Township property taxes

Important Notes

- Michigan's fuel tax remained unchanged from 1997 – 2017
- Fuel tax and license/registration fees were increased in 2017.
  - Full increase didn't take effect until 2021.
- Michigan still ranks near the bottom in road funding levels.



FUNDING DISTRIBUTION

MTF Formula

- MTF is distributed through the Act 51 formula:
  - MDOT = 39%
  - County road commissions = 39%
  - Cities and villages = 22%

The 5 Buckets

- Different types of roads are eligible for different funds
- No funding bucket has enough

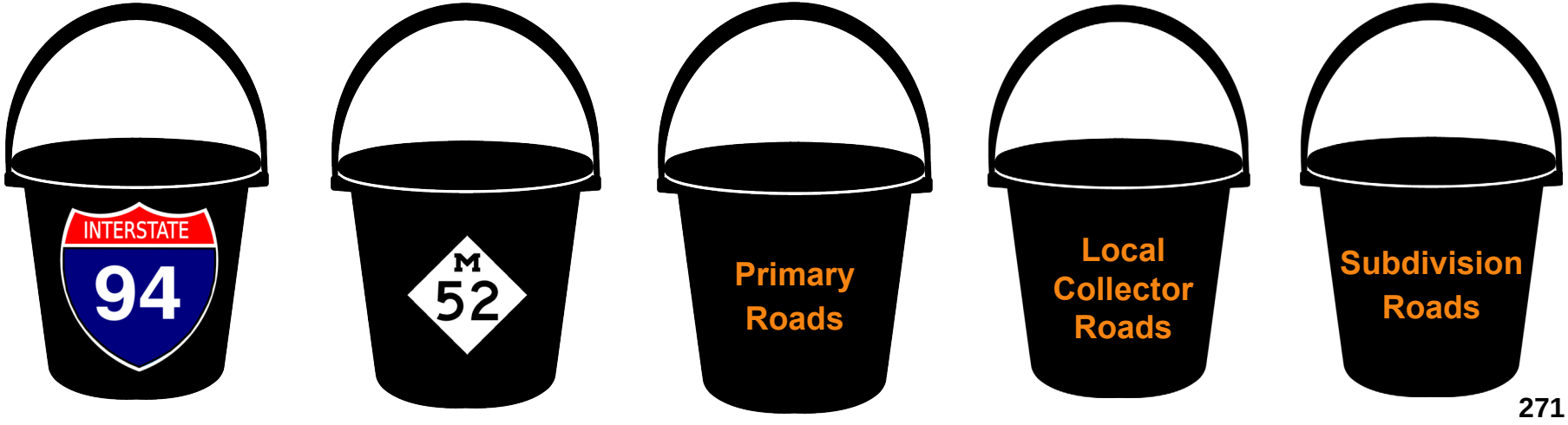

Interstate Freeways



- Purpose: Connect states
- Funding entities: MDOT
- Funding sources
  - Federal
  - MTF – state portion

State Highways



- Purpose: Connect counties
- Funding entities: MDOT
- Main funding sources
  - Federal
  - MTF – state portion

County Primary Roads



- Purpose: Connect local communities
- Funding entities: WCRC
- Main funding sources
  - MTF – county portion
  - Federal
  - County millage

Local Collector Roads



- Purpose: Connect homes and businesses to primary roads
- Funding entities: WCRC and township
- Main funding sources
  - MTF
  - Township funds

Subdivision Roads



- Purpose: Provide access to people who live/work there
- Funding entities: WCRC and township
- Main funding sources
  - MTF
  - Township funds
  - Special Assessment Districts

Asset Management

Due to funding challenges, we must be very strategic with limited funds….that means we use **Asset Management.**

Asset Management - Definition

- "Ongoing process of **maintaining, preserving, upgrading,** and operating physical assets **cost-effectively**, based on a **continuous physical inventory and condition assessment and investment** to achieve established performance goals."

WCRC's Strategy

- Focus on preventative maintenance
  - Crack seal and seal coat
  - Resurfacing (paved and unpaved)
  - Reconstruction
- Apply the right fix, at the right time, in the right place

Keep Your Car Moving

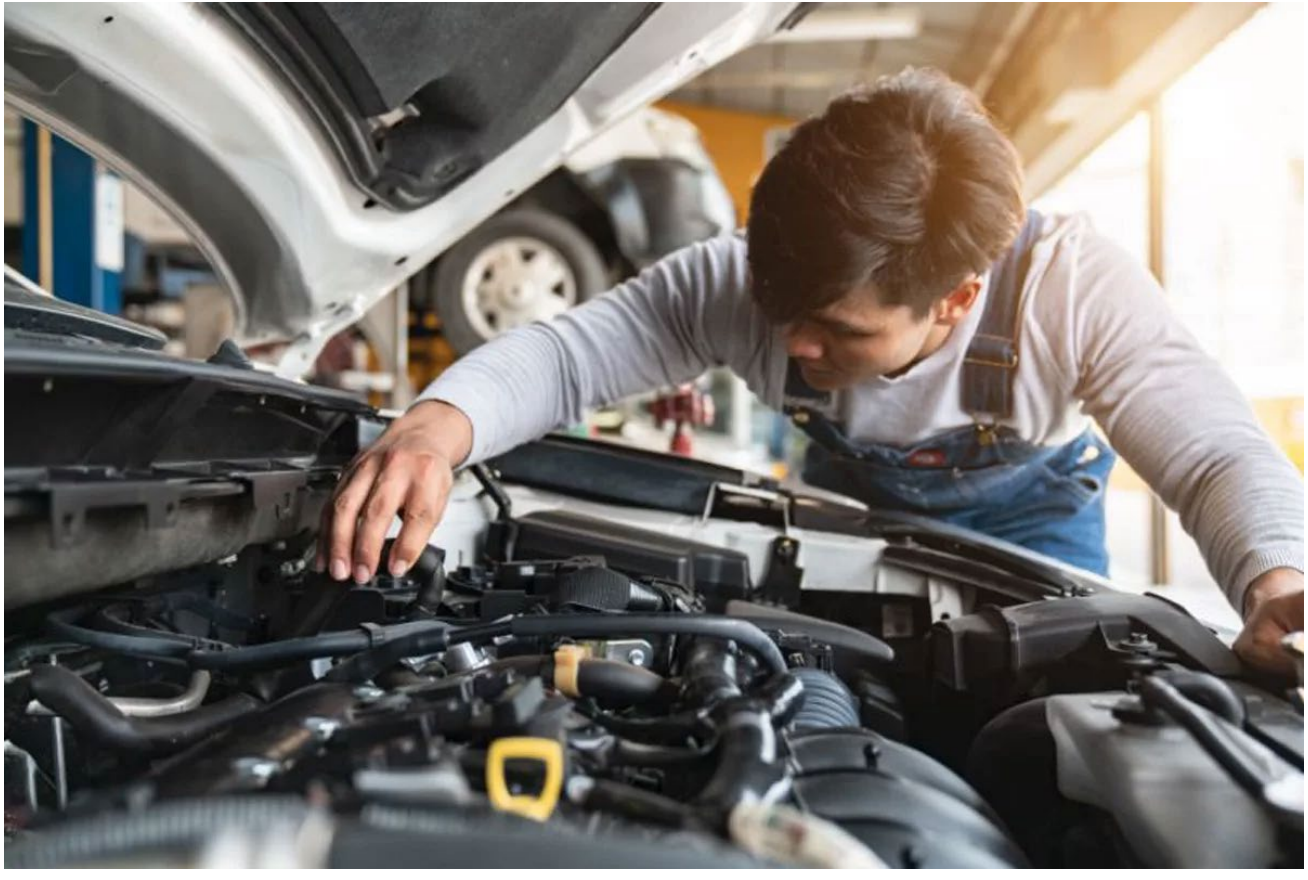

Bringing it Home



Asset Management – Is It Working?

- Paved, primary roads

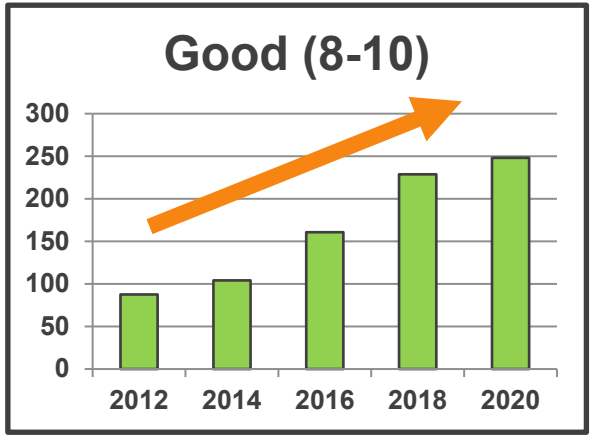

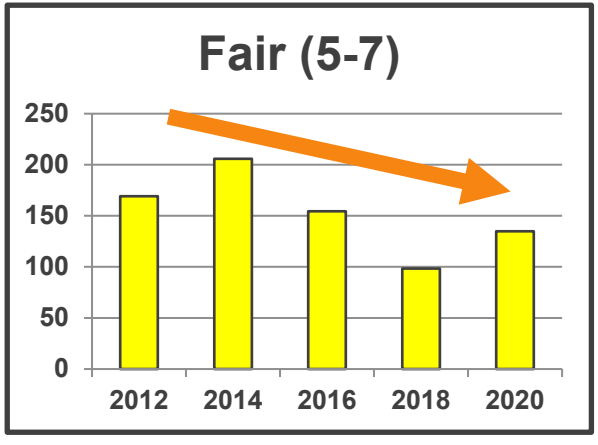

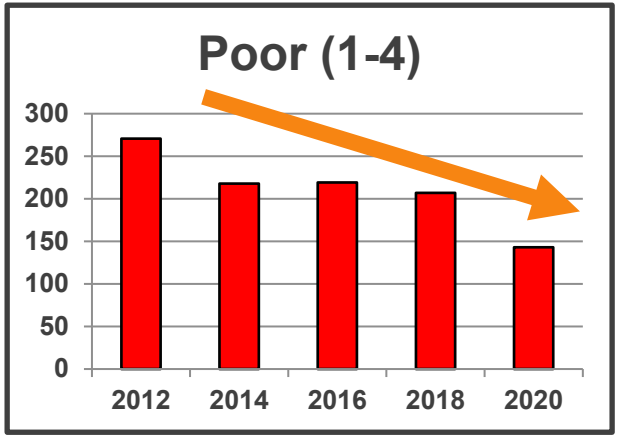

Asset Management – Is It Working?

- Paved, local roads

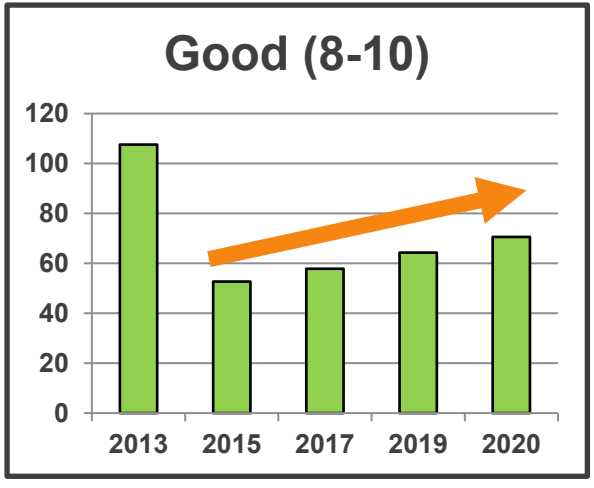

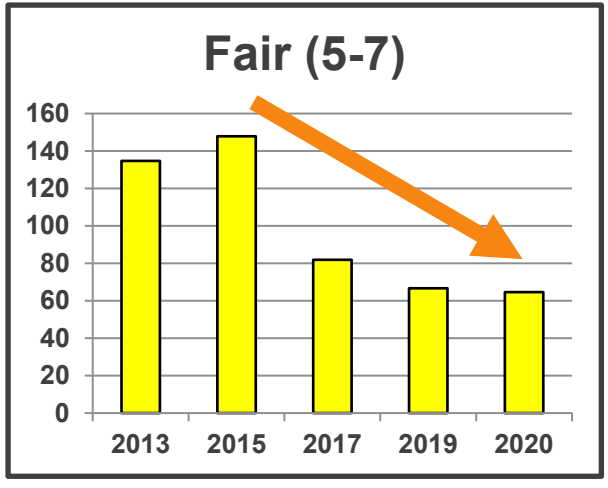

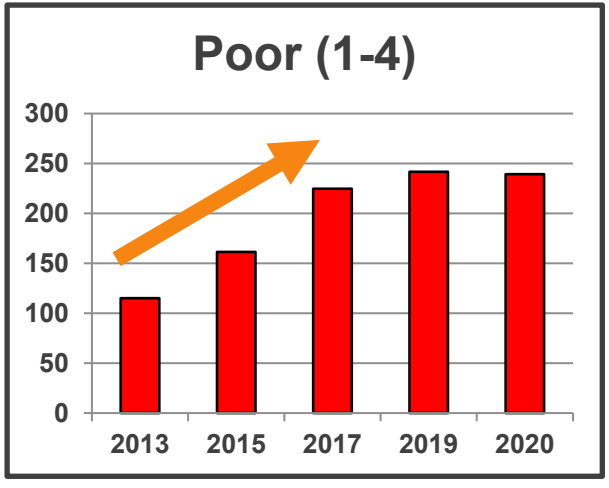



PARTNERSHIPS

Unique Partnerships

- We each have a role to play
  - WCRC is responsible for maintaining roads
  - Townships make land-use decisions that impact traffic

Transportation Planning

- WCRC responsible for primary roads
  - Seeks public input
    - County-wide millage plan
    - Federal Transportation Improvement Plan (TIP)

Funding Roads Locally

- We’re in this together
  - WCRC’s local matching program
  - Township contributions
    - General fund
    - Township-wide millage
    - Township-wide SAD
    - Municipal bonds
    - Neighborhood SAD

Examples

- Township road millage



Examples

- Township-wide SAD



Examples

- Bond sales



Asset Management Planning

- We are developing an Asset Management Plan and we need YOUR help!
  - More to come throughout 2021



CONTACT US

COUNTY ROAD
WASHTENAW
COMMISSION

Contact Us



Call us (734) 761-1500
Monday – Friday, 7 a.m. – 3:30 p.m.
Office is currently open by-appointment only

Contact Us



Submit a service request through WCRC Fix It

Available in the app store or at wcroads.org

Contact Us

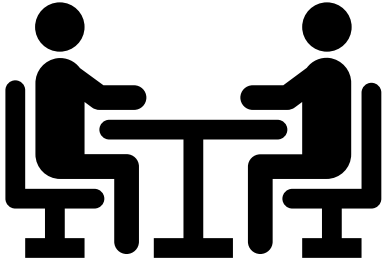

Virtual board meetings

1st and 3rd Tuesday of the month,
1 p.m. on Zoom

Contact Us



Chat with the Road Commission

Every Wednesday, noon – 1 p.m. on Zoom

Contact Us



Visit wcroads.org

- Certification maps
- Current projects map
- FAQs
- Submit a WCRC Fix It Request
- Submit a permit
- Subscribe to road updates



Q AND A

To Ask a Question

- On your computer or smart phone:
  - Join audio then click “participants” at the bottom of screen and select “raise hand”

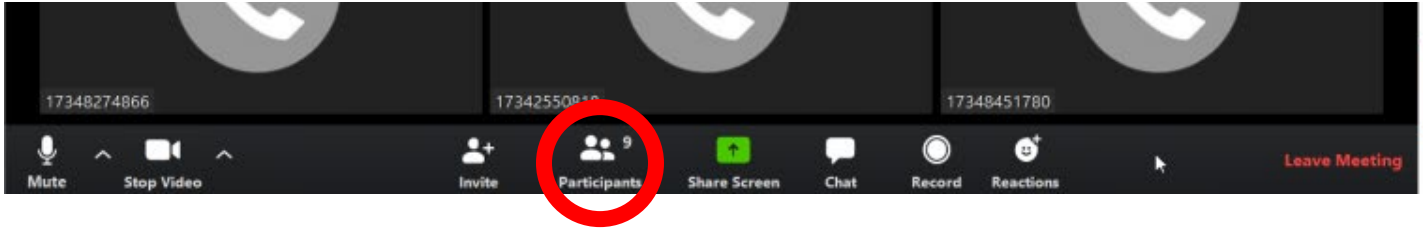

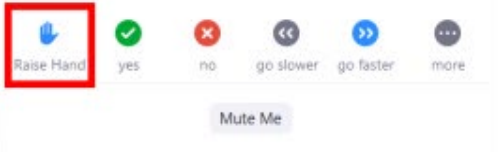

- On your touchtone phone: Dial *9

"DRAFT"

SCIO TOWNSHIP PLANNING COMMISSION
827 NORTH ZEEB ROAD, ANN ARBOR, MICHIGAN 48103
MEETING MINUTES OF MONDAY, NOVEMBER 22, 2021

Meeting Conducted Via Online Format

1) CALL TO ORDER

Chair Culbertson called the meeting to order at 7:01 p.m.

2) ROLL CALL

Present: Holland, Cheng, Culbertson, Moore

Commissioner Holland: City of Venice, Sarasota County, FL
Commissioner Moore: Scio Township, Washtenaw County, MI
Commissioner Cheng: Scio Township, Washtenaw County, MI
Commissioner Culbertson: Scio Township, Washtenaw County, MI

Absent: Courteau, Hyde, Sharma

Others present:
Doug Lewan, AICP, CWA
Sally Bos, PE, OHM Advisors
Stacie Serdar, PE, OHM Advisors

3) ADOPTION OF AGENDA

MOTION BY COMMISSIONER MOORE, SUPPORTED BY COMMISSIONER HOLLAND TO ADOPT THE AGENDA AS POSTED.

YES: 4 NO: 0 MOTION CARRIED.

ROLL CALL:
HOLLAND: YES
MOORE: YES
CHENG: YES
CULBERTSON: YES

4) COMMUNICATIONS/CORRESPONDENCE

Commissioner Jay Holland's resignation.

5) PRESENTATIONS REQUESTED BY THE PLANNING COMMISSION

None

6) PUBLIC COMMENT – see sign-in sheets at Twp Hall presentation desk

Chair read the rules for public comment.

Pam Boyd, 517 Linden Lane, Ann Arbor, MI 48103
Patricia Mazzola, 4943 Gullane Drive, Ann Arbor, MI 48103

MOTION BY COMMISSIONER MOORE, SUPPORT BY COMMISSIONER HOLLAND TO CLOSE THE PUBLIC HEARING 7:13 PM.

YES: 4 NO: 0 MOTION CARRIED.

ROLL CALL:
HOLLAND: YES
MOORE: YES
CHENG: YES
CULBERTSON: YES

7) BUSINESS SESSION

A) Advertised public hearings

Opened at 7:13 p.m.

1. Item number: OA#21009
   Item name: Wolverine Pickleball, rezoning
   Applicants: Christy Howden, Wolverine Pickleball

   Comments by Doug Lewan.

   Comments by the Applicant.

   Public Comment:

   Bill Kinley, 843 Asa Gray Drive, Ann Arbor, MI

   MOTION BY COMMISSIONER HOLLAND, SUPPORT BY COMMISSIONER CHENG TO CLOSE THE PUBLIC HEARING AT 7:33 P.M.

   YES: 4 NO: 0 MOTION CARRIED.

   ROLL CALL:
   HOLLAND: YES
   MOORE: YES
   CHENG: YES
   CULBERTSON: YES

   Key Issues and concerns raised by Commissioners.

MOTION: OA#21009 WOLVERINE PICKLEBALL FOR A CONDITIONAL REZONING FROM I-1 LIMITED INDUSTRIAL TO C-4 COMPOSITE COMMERCIAL. MOTION BY COMMISSIONER HOLLAND, SUPPORT BY COMMISSIONER CHENG TO APPROVE.

BASED UPON THE INFORMATION RECEIVED FROM THE APPLICANT, AND REFLECTED IN MINUTES OF THIS MEETING, THE PLANNING COMMISSION FINDS THE ORDINANCE AMENDMENT #21009 WOLVERINE PICKLEBALL FOR CONDITIONAL REZONING FROM I-1 LIMITED INDUSTRIAL TO C-4 COMPOSITE COMMERCIAL REZONING REQUESTS RECEIVED BY THE TOWNSHIP MEETS THE INFORMATIONAL REQUIREMENTS OF SECTION 36-461 AND THE FACTORS FOUND IN SECTION 36-462 OF THE ZONING ORDINANCE AND THE CONDITIONAL REZONING FACTORS FOUND IN SECTION 36-463 AND RECOMMENDS APPROVAL.

THIS IS CONDITIONED UPON THE SPLIT OF THE PROPERTY AND THE FINDINGS OF FACT IN CARLISLE WORTMAN’S REPORT DATED NOVEMBER 16, 2021. THE CONDITIONAL REZONING IS FOR INDOOR RECREATION SUCH AS BOWLING, GYMNASIUMS, ICE AND/OR ROLLER SKATING RINKS, TENNIS CLUBS, AND COURT SPORT FACILITIES AND SIMILAR RECREATIONAL USES. OUTDOOR COMMERCIAL RECREATION FACILITIES SUCH AS MINIATURE GOLF AND GOLF DRIVING RANGES. RETAIL ESTABLISHMENTS SUBJECT TO THE PROVISION OF SECTION 36-134 AND STANDARD RESTAURANTS AND ESTABLISHMENTS THAT SERVE ALCOHOL.

YES: 4 NO: 0 MOTION CARRIED.

ROLL CALL:
HOLLAND: YES
MOORE: YES
CHENG: YES
CULBERTSON: YES

B) Unfinished business

None.

C) New Business

1. Item number: SP #21015
   Item name: Fountain Investment Group, addition, and site work
   Applicants: Doug Selby, Meadowlark

Comments by the Applicant.

Comments by Doug Lewan.

Comments by Sally Bos.

Key issues and concerns raised by commission members.

MOTION BY COMMISSIONER HOLLAND, SUPPORT BY COMMISSIONER MOORE TO APPROVE. BASED UPON THE INFORMATION RECEIVED FROM THE APPLICANT AND REFLECTED IN THE MINUTES OF THIS MEETING, THE PLANNING COMMISSION FINDS THAT SITE PLAN #21015 FOUNTAIN INVESTMENT GROUP ADDITION AND SITE WORK MEETS THE CRITERIA FOR SITE PLAN APPROVAL PURSUANT TO SECTION 36-180 OF THE ZONING ORDINANCE AND RECOMMENDS APPROVAL. THE SITE PLAN IS RECOMMENDED WITH THE FOLLOWING CONDITIONS:

1. CONCERNS NOTED IN THE TOWNSHIP PLANNER’S REVIEW DATED NOVEMBER 3, 2021.

2. CONCERNS NOTED IN THE TOWNSHIP ENGINEER’S REVIEW DATED NOVEMBER 3, 2021.

3. THE PLANNING COMMISSION RECOMMENDS APPROVAL FOR THE PARKING WAIVER FOR AN ADDITIONAL THREE PARKING SPACES.

4. ADD A CROSS-HASH MINIMUM THREE FOOT WIDE PATHWAY ALONG THE WEST SIDE OF THE DRIVE LEADING TO THE BUILDING SIDEWALK ENTRANCE.

YES: 4 NO: 0 ABSTAIN: 0 MOTION CARRIED.

ROLL CALL:
HOLLAND: YES
MOORE: YES
CHENG: YES
CULBERTSON: YES

2. Item number: SP #21014
Item name: Optiflow, new building
Applicants: Andy Klein, Rand Construction

Comments by the Applicant.

Comments by Doug Lewan.

Comments by Sally Bos.

Key issues and concerns raised by commission members.

MOTION BY COMMISSIONER HOLLAND, SUPPORT BY COMMISSIONER MOORE TO APPOVE SITE PLAN #21014 OPTIFLOW.

BASED UPON THE INFORMATION RECEIVED FROM THE APPLICANT AND REFLECTED IN THE MINUTES OF THIS MEETING, THE PLANNING COMMISSION

FINDS THAT SITE PLAN NUMBER #21014 OPTIFLOW, NEW BUILDING, MEETS THE CRITERIA FOR SITE PLAN APPROVAL PURSUANT TO SECTION 36-180 OF THE ZONING ORDINANCE AND RECOMMENDS APPROVAL. THE SITE PLAN IS RECOMMENDED WITH THE FOLLOWING CONDITIIONS:

1. CONCERNS NOTED IN THE TOWNSHIP PLANNER'S REVIEW DATED NOVEMBER 9, 2021.

2. CONCERNS NOTED IN THE TOWNSHIP ENGINEER'S REVIEW DATED NOVEMBER 3, 2021.

3. THE APPROVAL IS CONDITIONED UPON THE CONCERNS NOTED BEING ADDDRESSED PRIOR TO BEING PLACED BEFORE THE BOARD OF TRUSTEES.

4. THE LAND WILL BE DIVIDED PRIOR TO CONSTRUCTION.

YES: 4 NO: 0 ABSTAIN: 0 MOTION CARRIED.

ROLL CALL:
HOLLAND: YES
MOORE: YES
CHENG: YES
CULBERTSON: YES

8) REPORTS / COMMISSION ACTIVITY

1. Engineering Consultant – OHM

   Zeeb Pathway Phase 3 has been completed.

2. Planning Consultant – CWA

   The Master Plan is done. We will revisit the revision of ordinances.

3. Chair Report – Culbertson

   Jay Holland has resigned.

4. BOT Board of Trustees Report – Courteau

   None.

5. ZBA Zoning Board of Appeals – Culbertson

   There were three variances. Two sign variances were postponed until December.

6. DDA – Holland

None.

7. Road Commission Advisory Committee – Sharma

None.

8. LPC Land Preservation Commission – Courteau

None.

9. ZOA Zoning Ordinance Amendments – Cheng

None.

10. Parks and Rec Advisory Board – Hyde

None.

11. TAP committee – Cheng

We meet at 4:00 on the second Wednesday of each month.

12. HRWC – Hyde

None.

9) APPROVAL OF MINUTES/ For complete record of PC discussions, please see available video format.

1. Minutes of 2021-11-08

MOTION BY COMMISSIONER MOORE, SUPPORTED BY COMMISSIONER MOORE TO APPROVE THE MINUTES AS CORRECTED.

YES: 4 NO: 0 MOTION CARRIED.

ROLL CALL:
HOLLAND: YES
MOORE: YES
CHENG: YES
CULBERTSON: YES

10) ADJOURNMENT

MOTION BY COMMISSIONER HOLLAND, SUPPORT COMMISSIONER MOORE TO ADJOURN AT 9:00 P.M.

YES: 4 NO: 0 MOTION CARRIED.

ROLL CALL:
HOLLAND: YES
MOORE: YES
CHENG: YES
CULBERTSON: YES