REGULAR MEETING
Sioux City Community School District
Educational Service Center
627 4th St.
Monday, October 26, 2026 – 6:00 PM

The live meeting can be seen at:
https://siouxcityschools.new.swagit.com/views/553/live

Public Comment Forms may be accessed online at the Sign Up Form for Public Comment web page (204.15-E Form-on line submission) or at the meeting, but must be completed and given to the Board Secretary prior to the start of the meeting. https://fs2.formsite.com/siouxcitycommschools/fxsougexyb/index.html

I. Call to Order

II. Pledge of Allegiance

III. Roll Call of Members

IV. Approval of Agenda

V. Citizen Input

At this time, the Board of Directors invites individuals or delegations to come forward and speak on any issues related to school district operations that are not included on today's meeting agenda.

Citizen input on action and discussion items will be accepted at the time of discussion of each agenda item.

VI. Special Recognition

A. Staff Members of the Month

VII. Consent Action Item(s)

RECOMMENDATION: That the Board of Directors approves the following consent action item(s).

A. Board Meeting Minutes from October 12, 2026 – Jim Vanderloo

B. Finance Report(s) – Patty Blankenship

C. Level I Investigators – Barb Caskey/ Zarah Simpson

VIII. Board Committee Reports

IX. Future Meetings

- Board Finance & Facilities Committee Meeting – 3:00 p.m., November 2, 2026, ESC Board Room
- Board Policy Committee Meeting – 3:30 p.m., November 3, 2026, ESC Board Room
- Board Student Achievement Committee Meeting – 12:00 p.m., November 4, 2026, ESC Board Room
- Teacher Quality Committee Meeting – 8:00 a.m., November 5, 2026, ESC Room #116
- Regular School Board Meeting – 6:00 p.m., November 9, 2026, ESC Board Room
- School Improvement Advisory Committee Meeting – 5:00 p.m., November 10, 2026, ESC Board Room
- Board Finance & Facilities Committee Meeting – 3:00 p.m., November 16, 2026, ESC Board Room
- Board Policy Committee Meeting – 3:30 p.m., November 17, 2026, ESC Board Room
- School Building Advisory Committee Meeting – 5:30 p.m., November 17, 2026, ESC Board Room
- Iowa Association of School Boards (IASB) BoardCon – November 18 – 20, 2026, Iowa Events Center, 730 3rd, Des Moines, IA 50309

***Notice is given that a majority of the members of the Board of Directors may gather in Des Moines, Iowa on November 18-20, 2026 to attend the Iowa Association of School Boards Annual Convention. No deliberation or action by the Board is anticipated on any policy issues.

- UEN Annual Meeting – 6:00 p.m., November 18, 2026, Hilton Des Moines Downtown, 435 Park St., Des Moines, IA 50309
- Board Student Achievement Committee Meeting – 12:00 p.m., November 18, 2026, ESC Board Room
- Annual School Board Meeting – 6:00 p.m., November 23, 2026, ESC Board Room

X. Interim Superintendent's Report

XI. Items of Presentation, Discussion, and/or Action

A. Superintendent Search – President Lee

B. Discussion of Proposed Early Retirement Incentive Plan for Certified Administrators – Action on Proposed Early Retirement Incentive Plan for

Certified Administrators – President Lee

C. Human Resources Report(s) – Barb Caskey
Board Priority: Staff Recruitment and Retention

RECOMMENDATION: That the Board of Directors approves the following Human Resources Report(s):

- (1) New Positions
- (4) New Hire(s) – Coaching
- (5) New Hire(s) – Classified
- (7) Food Service New Hire(s)/ Changes in Salaries
- (10) Support Staff Changes
- (13) Resignation(s) - Coaching
- (14) Resignation(s) – Classified
- (19) Retirement - Certified
- (23) Leave of Absence

D. AESA (Association of Educational Service Agencies) – Barb Caskey
Board Priority: Staff Recruitment and Retention
RECOMMENDATION: That the Board of Directors approves the contract with AESA for $19,500.

E. Distribution of Education Support Personnel State Funding – Jim Vanderloo *Board Priority: Staff Recruitment and Retention*
RECOMMENDATION: That the Board of Directors approves the method of distribution of the Education Support Personnel State Funding.

F. Title I Update – Jarod Mozer
Board Priority: Student Achievement/ Continuous Academic Improvement for All Students
RECOMMENDATION: That the Board of Directors acknowledges the Title 1A budget update.

G. FY28 Budget Guiding Principles – Jim Vanderloo/ Patty Blankenship
Board Priorities: Financial Health, Student Achievement/Continuous Academic Improvement for All Students, Special Education Program Implementation and Refinement, English Language Learners and Dual Language Program Implementation and Refinement, Staff Recruitment and Retention
RECOMMENDATION: That the Board of Directors approves the FY28 budgetary guiding principles.

H. Resolution to Consider Approving Transfer of Funds to the Flexibility Account Within the General Fund and Setting Hearing on Proposed Resolution Approving Expenditure of Funds in the Flexibility Account – Patty Blankenship *Board Priorities: Financial Health, Student Achievement/Continuous Academic Improvement for All Students*

RECOMMENDATION: That the Board of Directors adopts the following resolution:

RESOLUTION TO CONSIDER APPROVING TRANSFER OF FUNDS TO THE FLEXIBILITY ACCOUNT WITHIN THE GENERAL FUND AND SETTING HEARING ON PROPOSED RESOLUTION APPROVING EXPENDITURE OF FUNDS IN THE FLEXIBILITY ACCOUNT.

I. Public Charter School – Amy Denney/ James Cline
Board Priority: Student Achievement/ Continuous Academic Improvement for All Students

J. Solution Tree – Amy Denney
Board Priority: Student Achievement/ Continuous Academic Improvement for All Students
RECOMMENDATION: That the Sioux City Community School District Board of Directors approves the purchase of professional development services with Solution Tree for $7,500.00 for Bishop Heelan Catholic Schools for the 2026-2027 school year.

K. Contracts for Board Approval – Rebecca Rieken/ Jarod Mozer
Board Priority: Student Achievement/ Continuous Academic Improvement for All Students
RECOMMENDATION: That the Board of Directors approves and executes the contracts to support student learning and activities.

L. Central Kitchen Food Service Agreements for Nutrition Services – Ron Koch/ Rich Luze *Board Priority: Financial Health*
RECOMMENDATION: That the Board of Directors approves the agreements for Nutrition Services to Siouxland Mental Health.

M. Food and Nutrition Refrigerated Display Case – Ron Koch/ Rich Luze
RECOMMENDATION: That the Board of Directors awards the refrigerated display case(s) for the Sioux City Community School District Food and Nutrition Services to Refrigeration Engineering Inc. (REI) in the amount of $43,633.66.

N. East and West High Elevator Project-Change Order 1 – Ron Koch
Board Priority: Facility Planning

RECOMMENDATION: That the Board of Directors approves the change order in the amount of $41,670.00, reducing the total contract amount to $570,330.00 to L & L Builders.

O. East and North Middle School Boiler Replacement Project – Ron Koch

Board Priority: Facilities Planning and Financial Health

RECOMMENDATION: That the Board of Directors approves the award of the East Middle School and North Middle School Boiler Replacement Projects to C.W. Suter of Sioux City, Iowa, as the lowest responsive bidder, with a base bid of $330,720.00 for East Middle School and $246,480.00 for North Middle School, for a combined base bid amount of $577,200.00.

P. Pimloc Secure Redact – Ron Koch

RECOMMENDATION: That the Board of Directors accepts the renewal agreement with Pimloc Secure Redact for redaction software for $2850.00.

Q. First Reading of Board Policies – Jim Vanderloo

- BP 200.7 Code of Ethics
- BP 203.2 Community/ Advisory Committees
- BP 711 Use of Recording Devices/ Cameras on School Property

RECOMMENDATION: That the Board of Directors approves the listed board policies for first reading.

XII. Adjourn

STAFF MEMBER OF THE MONTH

NEXT LEVEL LEADERSHIP UNLOCKED

Bryant Elementary School – Brookelyn Mosier
Clark Early Childhood (Preschool) – Suzanne Cloud
Hunt Elementary School – Lucia Donado
Irving Elementary School – Sam Ubben
Leeds Elementary School – McKinzi Bruhn
Liberty Elementary School – Sydney Luu
Loess Hills Elementary School – Chase McInnis
Morningside Elementary School – Kim Wilson
Nodland & Sunnyside Elementary School – Tina Cobb
Perry Creek Elementary School – Amanda Corderman
Riverside Elementary School – Sara Medbourn
Spalding Park Elementary School – Gina Dobbs

East Middle School – Shijan Oehlerking
North Middle School – Janelle Olesen
West Middle School – Whittney Carnahan
East High School – John Stibbs
North High School – Yvette Boysen
West High School – Lee Johnson
Sioux City Career Academy – Cara Kern
Educational Service Center – Brittany Covarrubias
Operations & Maintenance – Justin Harrell

These staff go above and beyond for our students and staff, helping our entire team LVL UP!

Sioux City Community School District

Educational Service Center, 627 4th St.

Minutes – Pending Board Approval

October 12, 2026

REGULAR MEETING 2

I. Call to Order 2

II. Pledge of Allegiance 2

III. Roll Call of Members 2

IV. Approval of Agenda 2

V. Citizen Input 2

VI. Consent Action Item(s) 2

A. Board Meeting Minutes from September 28, 2026 – Jim Vanderloo 2

B. Finance Report(s) – Patty Blankenship 2

VII. Board Committee Reports 2

VIII. Hearing 2

IX. Future Meetings 3

X. Interim Superintendent's Report 3

XI. Items of Presentation, Discussion, and/or Action 3

A. Human Resources Report(s) 3

B. Board Authorization to Request Modified Supplemental Amount for EL Excess Costs 4

C. Request for Allowable Growth & Supplemental Aid for the Negative Special Education Balance 4

D. Learning Without Tears 4

E. Contracts for Board Approval 4

F. TCP Export Module 4

G. Preliminary Discussion - ESC Vault 4

H. Second & Final Reading of Board Policies 5

XII. Adjourn 5

REGULAR MEETING

Sioux City Community School District
Educational Service Center, 627 4th St.
Minutes – Pending Board Approval
October 12, 2026

I. Call to Order

President Lee called the regular meeting to order at 6:00 p.m.

II. Pledge of Allegiance

III. Roll Call of Members

Board Secretary Seaniece Heilman called roll.

Present: Directors Hibbs, Lee, Meyers, Michaelson, Miller, and Supiot

Absent: Director Hanson

IV. Approval of Agenda

Director Miller moved, and Director Hibbs seconded the motion to approve the agenda. Motion carried 6-0.

V. Citizen Input

none.

VI. Consent Action Item(s)

A. Board Meeting Minutes from September 28, 2026 – Jim Vanderloo

B. Finance Report(s) – Patty Blankenship

Director Miller moved, and Director Meyers seconded the motion to approve the consent action items. Motion carried 6-0.

VII. Board Committee Reports

Director Hibbs had the opportunity to attend the School Building Advisory Committee (SBAC) meeting and mentioned the next meeting date on 10/20. He expressed his excitement in seeing the committee going and working.

Regarding the SBAC, Director Miller shared that there was positive feedback on how well run and well prepared the facilitators were.

President Lee thanked board members and cabinet members for their attendance at the SBAC meeting.

VIII. Hearing

A. FY27 West and North Middle School Roof Renovation Project

Notice was provided that a hearing would be held at 6:00 p.m. local time, at the Education Service Center, 627 4th Street, Sioux City, Iowa, on the 12th of October 2026 for the West and North Middle School Roof Renovation Project.

Any interested party may appear and file objections and any information for or against the same will be heard on the FY27 West and North Middle School Roof Renovation Project with the final decision of the Board of Education as a matter of record.

Public Comment: none

Director Meyers moved, and Director Miller seconded the motion to approve the plans, [specifications], and estimated costs, including engineering fees, provided by CMBA of Sioux City, Iowa, in the amount of $917,915.00 for West Middle and $825,065 for North Middle School's roofing renovations. Motion carried 6-0.

IX. Future Meetings

Teacher Quality Committee Meeting – 8:00 a.m., October 16, 2026, ESC Room #118

Board Finance & Facilities Committee Meeting – 3:00 p.m., October 19, 2026, ESC Board Room

Board Policy Committee Meeting – 3:30 p.m., October 20, 2026, ESC Board Room

School Building Advisory Committee Meeting – 5:30 p.m., October 20, 2026, ESC Board Room

Board Student Achievement Committee Meeting – 12:00 p.m., October 21, 2026, ESC Board Room

School Improvement Advisory Committee Meeting – 5:00 p.m., October 22, 2026, ESC Board Room

Board Work Session re: Superintendent Search – 5:00 p.m., October 26, 2026, ESC Board Room

Regular School Board Meeting – 6:00 p.m., October 26, 2026, ESC Board Room

Board Finance & Facilities Committee Meeting – 3:00 p.m., November 2, 2026, ESC Board Room

Board Student Achievement Committee Meeting – 12:00 p.m., November 4, 2026, ESC Board Room

Teacher Quality Committee Meeting – 8:00 a.m., November 5, 2026, ESC Room #116

Regular School Board Meeting – 6:00 p.m., November 9, 2026, ESC Board Room

X. Interim Superintendent's Report

- He shared that he attended the Ahlers Employment Law Conference with some cabinet members.
- He, along with cabinet members, volunteered at the soup kitchen.
- He met with the high school student councils.
- He will meet with Senator Drey (10/13).
- He had the Urban Education Network (UEN) and Metro Area Superintendents' Meetings.
- He shared that they are completing the student count this week and that it must be finalized by the 15th.
- The Cabinet delivered the employee of the month awards.
- There was another dual language expansion committee meeting.

XI. Items of Presentation, Discussion, and/or Action

A. Human Resources Report(s)

Barb Caskey

Board Priority: Staff Recruitment and Retention

To answer a board member's question, Mrs. Caskey clarified that (the District) is not in a "hiring freeze".

Director Michaelson moved, and Director Hibbs seconded the motion to approve the listed HR Reports.

- (4) New Hire(s) – Coaching
- (5) New Hire(s) – Classified
- (7) Food Service New Hire(s)/ Changes in Salaries
- (8) Horizontal Advancements
- (9) Supplemental Stipends
- (10) Support Staff Changes
- (14) Resignation(s) – Classified
- (23) Leave of Absence

Motion carried 6-0.

B. Board Authorization to Request Modified Supplemental Amount for EL Excess Costs

Patty Blankenship

Board Priority: English Language Learners

Director Meyers moved, and Director Supiot seconded the motion to authorize the request to the SBRC for the modified supplement amount of $2,419,408.06 for EL excess costs related to limited English [proficient] programs. Motion carried 6-0.

C. Request for Allowable Growth & Supplemental Aid for the Negative Special Education Balance

Patty Blankenship/ Kim Neal

Board Priority: Special Education Program Implementation and Refinement

Director Meyers moved, and Director Supiot seconded the motion to authorize the request for allowable growth and supplemental aid for the negative special education balance in the amount of [$5,577,846.12]. Motion carried 6-0.

D. Learning Without Tears

Amy Denney

Board Priority: Student Achievement/ Continuous Academic Improvement for All Students

Director Michaelson moved, and Director Miller seconded the motion to approve the Learning without Tears professional services agreement for $3,700.00 for the 26-27 school year. Motion carried 6-0.

E. Contracts for Board Approval

Rebecca Rieken/ Jarod Mozer

Board Priority: Student Achievement/ Continuous Academic Improvement for All Students

Director Miller moved, and Director Michaelson seconded the motion to approve and execute the contracts to support student learning and activities. Motion carried 6-0.

F. TCP Export Module

Chad Fengel

Board Priority: Financial Health

Director Meyers moved, and Director Michaelson seconded the motion to approve the Statement of Work (SOW) with [TimeClock] Plus (TCP) to modify the export module to support overtime reporting requirements at the cost of $2,000. Motion carried 6-0.

G. Preliminary Discussion - ESC Vault

Ron Koch

Board Priority: Facility Planning

Director Miller moved, and Director Meyers seconded the motion to approve the District staff to initiate preliminary discussions with the City of Sioux City regarding necessary repairs and maintenance at the ESC. Motion carried 6-0.

H. Second & Final Reading of Board Policies

Jim Vanderloo

- 103 Equal Educational Opportunity
- AR 103(a) Complaints of Discrimination (Non-Title IX)
- AR 103(b) Section 504 Student and Parental Rights
- AR 103(c) Annual Notice of Nondiscrimination
- 104 Title IX
- AR 104 Procedures Related to Complaints of Sexual Harassment Under Title IX
- 204.14 Board Meeting Minutes
- 400.2 Employee Expression
- 402.13 Administrator Evaluation
- 402.11 Horizontal Advancement on Salary Schedule
- AR 504.4 Procedures for Reporting and Investigating Complaints of Bullying/ Harassment/ Hazing
- 505.19 Student Directory Information
- 506.4 Student Library Circulation Records
- 602.11 Physical Education
- 603.9 Technology and Instructional Materials
- AR 603.9 Technology and Instructional Materials ***NEW***
- 604.2 Private Instruction
- 709.3 Student Transportation for Extracurricular Activities

Director Miller moved, and Director Michaelson seconded the motion to approve the listed board policies for second & final reading.

Director Miller shared that the Nepotism policy (BP 401.34) was removed from second & final reading based on feedback that he and others have received. BP 401.34 will go back to the Board Policy Committee for further review.

Motion carried 6-0.

XII. Adjourn

Director Miller moved, and Director Hibbs seconded the motion to adjourn. Motion carried 6-0 and the Regular School Board meeting adjourned at 6:21 p.m.

_____

Treyla M. Lee, President
SCCSD Board of Directors

_____

Seaniece L. Heilman, Secretary
SCCSD Board of Directors

Monthly Actual Revenues, Expenditures and Budget Comparison Sioux City Community School District FY 2027 - General Fund (Preliminary)

Actual

Revenue	July	August	September	October	November	December	January	February	March	April	May	June	Fiscal Accrual	*Total (Preliminary)*	YTD Actual to Budget
State Aid ***(quarterly payments in FY27, 10 monthly payments in FY26)***	**$ 36,437,889**	$ 210,904												$ 36,648,793	**25.11%**
Property Taxes		$ 2,456	$ 1,803,066											$ 1,805,522	**5.11%**
Income Surtaxes														$ -	**0.00%**
Other State Funding		$ 80,259	$ 50,466											$ 130,725	**4.62%**
Federal Funds			$ 8,060											$ 8,060	**0.07%**
Tuition and Transportation Fees	$ 16,296	$ 30,944	$ 26,802											$ 74,042	**4.77%**
Other	$ 55,626	$ 535,359	$ 412,508											$ 1,003,493	**25.06%**
Total Monthly Revenues	$ 36,509,811	$ 859,922	$ 2,300,902	$ -	$ -	$ -	$ -	$ -	$ -	$ -	$ -	$ -	$ -	$ 39,670,635	**19.50%**
Total YTD Revenues	$ 36,509,811	$ 37,369,733	$ 39,670,635	$ 39,670,635	$ 39,670,635	$ 39,670,635	$ 39,670,635	$ 39,670,635	$ 39,670,635	$ 39,670,635	$ 39,670,635	$ 39,670,635	$ 39,670,635		
YTD Actual to Budget	17.94%	18.37%	19.50%	19.50%	19.50%	19.50%	19.50%	19.50%	19.50%	19.50%	19.50%	19.50%	19.50%		

Expenditures	July	August	September	October	November	December	January	February	March	April	May	June	Fiscal Accrual	*Total (Preliminary)*	YTD Actual to Budget
Salaries & Benefits	$ 1,795,497	$ 3,044,838	$ 13,609,882											$ 18,450,217	**10.69%**
Prof/Prop Services/Misc *(includes transfers)*	$ 167,477	$ 414,218	$ 794,918											$ 1,376,613	**12.56%**
Other Purch Svcs (Tuition, OE)		$ 8,039												$ 8,039	**0.10%**
Supplies, Capital Equipment	$ 1,465,503	$ 1,791,482	$ 633,483											$ 3,890,468	**34.31%**
Debt Service														$ -	
AEA Flowthrough	$ 1,343,792													$ 1,343,792	**25.00%**
Total Monthly Expenditures	$ 4,772,269	$ 5,258,577	$ 15,038,283	$ -	$ -	$ -	$ -	$ -	$ -	$ -	$ -	$ -	$ -	$ 25,069,129	**12.02%**
Total YTD Expenditures	$ 4,772,269	$ 10,030,846	$ 25,069,129	$ 25,069,129	$ 25,069,129	$ 25,069,129	$ 25,069,129	$ 25,069,129	$ 25,069,129	$ 25,069,129	$ 25,069,129	$ 25,069,129	$ 25,069,129		
YTD Actual to Budget	2.29%	4.81%	12.02%	12.02%	12.02%	12.02%	12.02%	12.02%	12.02%	12.02%	12.02%	12.02%	12.02%		
Excess (deficiency) of revenues over (under) expenditures														$ 14,601,506	

Budget

Revenue	July	August	September	October	November	December	January	February	March	April	May	June	Fiscal Accrual	Total
State Aid	$ 36,437,889	$ 210,904		$ 36,437,889			$ 36,437,889			$ 36,437,889			$ 9,916	$ 145,972,376
Property Taxes			$ 1,800,000	$ 13,943,899	$ 2,200,000	$ 800,000	$ 300,000	$ 300,000	$ 650,000	$ 13,100,000	$ 1,500,000	$ 300,000	$ 430,000	$ 35,323,899
Income Surtaxes						$ 1,974,500		$ 658,190						$ 2,632,690
Sales Tax														$ -
Other State Funding		$ 80,259	$ 50,466	$ 372,952	$ 350,231		$ 700,000		$ 100,000	$ 472,952		$ -	$ 700,000	$ 2,826,860
Federal Funds			$ 8,060	$ 250,000	$ 250,000	$ 550,000	$ 1,170,000	$ 1,800,000	$ 260,000	$ 400,000	$ 2,350,000	$ 360,000	$ 3,759,218	$ 11,157,278
Tuition and Transportation Fees	$ 16,000	$ 31,000	$ 27,000	$ 30,000	$ 20,000	$ 20,000	$ 20,000	$ 470,000	$ 186,000	$ 20,000	$ 20,000	$ 20,000	$ 671,000	$ 1,551,000
Other	$ 56,000	$ 535,000	$ 413,000	$ 300,000	$ 300,000	$ 300,000	$ 300,000	$ 300,000	$ 300,000	$ 300,000	$ 300,000	$ 300,000	$ 300,000	$ 4,004,000
Total Monthly Revenues	$ 36,509,889	$ 857,163	$ 2,298,526	$ 51,334,740	$ 3,120,231	$ 3,644,500	$ 38,927,889	$ 3,528,190	$ 1,496,000	$ 50,730,841	$ 4,170,000	$ 980,000	$ 5,870,134	$ 203,468,103
Total YTD Revenues	$ 36,509,889	$ 37,367,052	$ 39,665,578	$ 91,000,318	$ 94,120,549	$ 97,765,049	$ 136,692,938	$ 140,221,128	$ 141,717,128	$ 192,447,969	$ 196,617,969	$ 197,597,969	$ 203,468,103	
Percent of Budget	17.94%	18.37%	19.49%	44.72%	46.26%	48.05%	67.18%	68.92%	69.65%	94.58%	96.63%	97.11%	100.00%	

Expenditures	July	August	September	October	November	December	January	February	March	April	May	June	Fiscal Accrual	Total
Salaries & Benefits	$ 1,800,000	$ 3,050,000	$ 13,600,000	$ 16,000,000	$ 14,500,000	$ 14,500,000	$ 14,500,000	$ 14,500,000	$ 14,800,000	$ 14,500,000	$ 16,300,000	$ 33,000,000	$ 1,600,000	$ 172,650,000
Prof/Prop Services/Misc *(includes transfers)*	$ 167,000	$ 414,000	$ 795,000	$ 680,000	$ 750,000	$ 590,000	$ 940,000	$ 480,000	$ 1,600,000	$ 740,000	$ 1,000,000	$ 1,300,000	$ 1,500,000	$ 10,956,000
Other Purch Svcs (Tuition, OE)		$ 8,000					$ 20,000	$ 3,800,000	$ 80,000	$ 35,000	$ 35,000	$ 1,300,000	$ 3,000,000	$ 8,278,000
Supplies, Capital Equipment	$ 1,465,500	$ 1,790,000	$ 635,000	$ 900,000	$ 500,000	$ 500,000	$ 650,000	$ 500,000	$ 600,000	$ 500,000	$ 700,000	$ 1,200,000	$ 1,400,000	$ 11,340,500
Debt Service														$ -
AEA Flowthrough	$ 1,343,792			$ 1,343,792			$ 1,343,792			$ 1,343,792				$ 5,375,168
Total Monthly Expenditures	$ 4,776,292	$ 5,262,000	$ 15,030,000	$ 18,923,792	$ 15,750,000	$ 15,590,000	$ 17,453,792	$ 19,280,000	$ 17,080,000	$ 17,118,792	$ 18,035,000	$ 36,800,000	$ 7,500,000	$ 208,599,668
Total YTD Expenditures	$ 4,776,292	$ 10,038,292	$ 25,068,292	$ 43,992,084	$ 59,742,084	$ 75,332,084	$ 92,785,876	$ 112,065,876	$ 129,145,876	$ 146,264,668	$ 164,299,668	$ 201,099,668	$ 208,599,668	*DRAFT*
Percent of Budget	2.29%	4.81%	12.02%	21.09%	28.64%	36.11%	44.48%	53.72%	61.91%	70.12%	78.76%	96.40%	100.00%	
Excess (deficiency) of revenues over (under) expenditures														$ (5,131,565)

Cash balance FY27 *(state aid payments quarterly)*	**$ 125,548,016**	**$ 116,023,695**	**103,900,716**	**$ -**	**$ -**	**$ -**	**$ -**	**$ -**	**$ -**	**$ -**	**$ -**	**$ -**	
Cash balance FY26	$ 92,125,937	$ 82,093,096	84,088,226	$ 96,645,255	$ 96,534,630	$ 98,560,426	$ 99,823,196	$ 98,777,347	$ 98,014,628	$ 109,616,396	$ 112,707,421	$ 107,878,375	

Monthly Actual Revenues, Expenditures and Budget Comparison Sioux City Community School District FY 2027 - Management Fund (Preliminary)

Actual

Revenue	July	August	September	October	November	December	January	February	March	April	May	June	Fiscal Accrual	*Total (Preliminary)*	YTD Actual to Budget
State Aid														$ -	
Property Taxes		$ 512	$ 372,850											$ 373,362	**5.11%**
Income Surtaxes														$ -	
Sales Tax														$ -	
Other State Funds														$ -	**0.00%**
Federal Funds														$ -	
Tuition and Transportation Fees														$ -	
Other	$ 14,627													$ 14,627	**#DIV/0!**
Total Monthly Revenues	$ 14,627	$ 512	$ 372,850	$ -	$ -	$ -	$ -	$ -	$ -	$ -	$ -	$ -	$ -	$ 387,989	**5.21%**
Total YTD Revenues	$ 14,627	$ 15,139	$ 387,989	$ 387,989	$ 387,989	$ 387,989	$ 387,989	$ 387,989	$ 387,989	$ 387,989	$ 387,989	$ 387,989	$ 387,989		
YTD Actual to Budget	0.20%	0.20%	5.21%	5.21%	5.21%	5.21%	5.21%	5.21%	5.21%	5.21%	5.21%	5.21%	5.21%		

Expenditures	July	August	September	October	November	December	January	February	March	April	May	June	Fiscal Accrual	*Total (Preliminary)*	YTD Actual to Budget
Salaries & Benefits	$ 1,272,098													$ 1,272,098	**92.45%**
Prof/Prop Services/Misc	$ 3,356,885		$ 400,175											$ 3,757,060	**69.59%**
Other Purch Svcs (Tuition, OE)														$ -	
Supplies, Capital Equipment														$ -	
Debt Service														$ -	
AEA Flowthrough														$ -	
Total Monthly Expenditures	$ 4,628,983	$ -	$ 400,175	$ -	$ -	$ -	$ -	$ -	$ -	$ -	$ -	$ -	$ -	$ 5,029,158	**74.23%**
Total YTD Expenditures	$ 4,628,983	$ 4,628,983	$ 5,029,158	$ 5,029,158	$ 5,029,158	$ 5,029,158	$ 5,029,158	$ 5,029,158	$ 5,029,158	$ 5,029,158	$ 5,029,158	$ 5,029,158	$ 5,029,158		
YTD Actual to Budget	68.32%	68.32%	74.23%	74.23%	74.23%	74.23%	74.23%	74.23%	74.23%	74.23%	74.23%	74.23%	74.23%		
Excess (deficiency) of revenues over (under) expenditures														$ (4,641,169)	

Budget

Revenue	July	August	September	October	November	December	January	February	March	April	May	June	Fiscal Accrual	Total
State Aid														$ -
Property Taxes			$ 373,000	$ 2,900,000	$ 370,000	$ 150,000	$ 50,000	$ 50,000	$ 120,000	$ 2,900,000	$ 260,000	$ 50,000	$ 77,000	$ 7,300,000
Income Surtaxes														$ -
Sales Tax														$ -
Other State Funding				$ 70,285						$ 70,285				$ 140,570
Federal Funds														$ -
Tuition and Transportation Fees														$ -
Other														$ -
Total Monthly Revenues	$ -	$ -	$ 373,000	$ 2,970,285	$ 370,000	$ 150,000	$ 50,000	$ 50,000	$ 120,000	$ 2,970,285	$ 260,000	$ 50,000	$ 77,000	$ 7,440,570
Total YTD Revenues	$ -	$ -	$ 373,000	$ 3,343,285	$ 3,713,285	$ 3,863,285	$ 3,913,285	$ 3,963,285	$ 4,083,285	$ 7,053,570	$ 7,313,570	$ 7,363,570	$ 7,440,570	
Percent of Budget	0.00%	0.00%	5.01%	44.93%	49.91%	51.92%	52.59%	53.27%	54.88%	94.80%	98.29%	98.97%	100.00%	

Expenditures	July	August	September	October	November	December	January	February	March	April	May	June	Fiscal Accrual	Total
Salaries & Benefits	$ 1,259,000			$ 39,000			$ 39,000			$ 39,000				$ 1,376,000
Prof/Prop Services/Misc	$ 3,935,250		$ 428,750			$ 428,750		$ 428,750			$ 27,500		$ 150,000	$ 5,399,000
Other Purch Svcs (Tuition, OE)														$ -
Supplies, Capital Equipment														$ -
Debt Service														$ -
AEA Flowthrough														$ -
Total Monthly Expenditures	$ 5,194,250	$ -	$ 428,750	$ 39,000	$ -	$ 428,750	$ 39,000	$ 428,750	$ -	$ 39,000	$ 27,500	$ -	$ 150,000	$ 6,775,000
Total YTD Expenditures	$ 5,194,250	$ 5,194,250	$ 5,623,000	$ 5,662,000	$ 5,662,000	$ 6,090,750	$ 6,129,750	$ 6,558,500	$ 6,558,500	$ 6,597,500	$ 6,625,000	$ 6,625,000	$ 6,775,000	
Percent of Budget	76.67%	76.67%	83.00%	83.57%	83.57%	89.90%	90.48%	96.80%	96.80%	97.38%	97.79%	97.79%	100.00%	
Excess (deficiency) of revenues over (under) expenditures														$ 665,570

Cash balance FY27	**$ 143,999**	**$ 163,497**	**$ 136,222**	**$ -**	**$ -**	**$ -**	**$ -**	**$ -**	**$ -**	**$ -**	**$ -**	**$ -**	
Cash balance FY26	$ 652,066	$ -	$ -	$ 2,375,617	$ 2,843,252	$ 2,603,289	$ 2,659,202	$ 2,328,235	$ 2,253,796	$ 4,462,911	$ 4,714,522	$ 4,828,717	

Monthly Actual Revenues, Expenditures and Budget Comparison Sioux City Community School District FY 2027 - PPEL Fund (Preliminary)

Actual

Revenue	July	August	September	October	November	December	January	February	March	April	May	June	Fiscal Accrual	*Total (Preliminary)*	YTD Actual to Budget
State Aid														$ -	
Property Taxes		$ 83	$ 66,781											$ 66,864	**5.08%**
Income Surtaxes														$ -	
Sales Tax														$ -	
Other State Funding														$ -	**0.00%**
Federal Funds														$ -	**#DIV/0!**
Tuition and Transportation Fees														$ -	
Other														$ -	**#DIV/0!**
Total Monthly Revenues	$ -	$ 83	$ 66,781	$ -	$ -	$ -	$ -	$ -	$ -	$ -	$ -	$ -	$ -	$ 66,864	**4.99%**
Total YTD Revenues	$ -	$ 83	$ 66,864	$ 66,864	$ 66,864	$ 66,864	$ 66,864	$ 66,864	$ 66,864	$ 66,864	$ 66,864	$ 66,864	$ 66,864		
YTD Actual to Budget	0.00%	0.01%	4.99%	4.99%	4.99%	4.99%	4.99%	4.99%	4.99%	4.99%	4.99%	4.99%	4.99%		

Expenditures	July	August	September	October	November	December	January	February	March	April	May	June	Fiscal Accrual	*Total (Preliminary)*	YTD Actual to Budget
Salaries & Benefits														$ -	
Prof/Prop Services/Misc														$ -	#DIV/0!
Other Purch Svcs (Tuition, OE)														$ -	
Supplies, Capital Equipment	$ 1,125,425	$ 66,398	$ 58,715											$ 1,250,538	87.27%
Debt Service														$ -	
AEA Flowthrough														$ -	
Total Monthly Expenditures	$ 1,125,425	$ 66,398	$ 58,715	$ -	$ -	$ -	$ -	$ -	$ -	$ -	$ -	$ -	$ -	$ 1,250,538	87.27%
Total YTD Expenditures	$ 1,125,425	$ 1,191,823	$ 1,250,538	$ 1,250,538	$ 1,250,538	$ 1,250,538	$ 1,250,538	$ 1,250,538	$ 1,250,538	$ 1,250,538	$ 1,250,538	$ 1,250,538	$ 1,250,538		
YTD Actual to Budget	78.54%	83.17%	87.27%	87.27%	87.27%	87.27%	87.27%	87.27%	87.27%	87.27%	87.27%	87.27%	87.27%		
Excess (deficiency) of revenues over (under) expenditures														$ (1,183,674)	

Budget

Revenue	July	August	September	October	November	December	January	February	March	April	May	June	Fiscal Accrual	Total
State Aid														$ -
Property Taxes			$ 67,000	$ 505,000	$ 80,000	$ 28,000	$ 12,000	$ 10,000	$ 25,000	$ 505,000	$ 56,631	$ 13,000	$ 15,000	$ 1,316,631
Income Surtaxes														$ -
Sales Tax														$ -
Other State Funding				$ 12,136						$ 12,135				$ 24,271
Federal Funds														$ -
Tuition and Transportation Fees														$ -
Other														$ -
Total Monthly Revenues	$ -	$ -	$ 67,000	$ 517,136	$ 80,000	$ 28,000	$ 12,000	$ 10,000	$ 25,000	$ 517,135	$ 56,631	$ 13,000	$ 15,000	$ 1,340,902
Total YTD Revenues	$ -	$ -	$ 67,000	$ 584,136	$ 664,136	$ 692,136	$ 704,136	$ 714,136	$ 739,136	$ 1,256,271	$ 1,312,902	$ 1,325,902	$ 1,340,902	
Percent of Budget	0.00%	0.00%	5.00%	43.56%	49.53%	51.62%	52.51%	53.26%	55.12%	93.69%	97.91%	98.88%	100.00%	

Expenditures	July	August	September	October	November	December	January	February	March	April	May	June	Fiscal Accrual	Total
Salaries & Benefits														$ -
Prof/Prop Services/Misc														$ -
Other Purch Svcs (Tuition, OE)														$ -
Supplies, Capital Equipment	$ 1,125,425	$ 66,398	$ 58,715	$ 50,000	$ 12,462	$ 20,000	$ 20,000	$ 20,000	$ 20,000	$ 20,000	$ 20,000			$ 1,433,000
Debt Service														$ -
AEA Flowthrough														
Total Monthly Expendidtures	$ 1,125,425	$ 66,398	$ 58,715	$ 50,000	$ 12,462	$ 20,000	$ 20,000	$ 20,000	$ 20,000	$ 20,000	$ 20,000	$ -	$ -	$ 1,433,000
Total YTD Expenditures	$ 1,125,425	$ 1,191,823	$ 1,250,538	$ 1,300,538	$ 1,313,000	$ 1,333,000	$ 1,353,000	$ 1,373,000	$ 1,393,000	$ 1,413,000	$ 1,433,000	$ 1,433,000	$ 1,433,000	
Percent of Budget	78.54%	83.17%	87.27%	90.76%	91.63%	93.02%	94.42%	95.81%	97.21%	98.60%	100.00%	100.00%	100.00%	
Excess (deficiency) of revenues over (under) expenditures														$ (92,098)

Cash balance FY27	$ -	$ -	$ -	$ -	$ -	$ -	$ -	$ -	$ -	$ -	$ -	$ -	
Cash balance FY26	**$ 1,074,091**	**$ 1,072,342**	**$ 1,052,191**	**$ 1,507,587**	**$ 1,585,649**	**$ 1,613,541**	**$ 1,621,563**	**$ 1,616,158**	**$ 1,614,081**	**$ 1,504,075**	**$ 1,559,331**	**$ 1,088,081**	

Monthly Actual Revenues, Expenditures and Budget Comparison Sioux City Community School District FY 2027 - Sales Tax Fund (Preliminary)

Actual

Revenue	July	August	September	October	November	December	January	February	March	April	May	June	Fiscal Accrual	*Total (Preliminary)*	YTD Actual to Budget
State Aid														$ -	
Property Taxes														$ -	
Income Surtaxes														$ -	
Sales Taxes		$ 1,545,081	$ 2,014,817											$ 3,559,898	**18.13%**
Other State Funding														$ -	
Federal Funds														$ -	
Tuition and Transportation Fees														$ -	
Other	$ 14,647	$ 75,799	$ 67,498											$ 157,944	**18.58%**
Total Monthly Revenues	$ 14,647	$ 1,620,880	$ 2,082,315	$ -	$ -	$ -	$ -	$ -	$ -	$ -	$ -	$ -	$ -	$ 3,717,842	**18.15%**
Total YTD Revenues	$ 14,647	$ 1,635,527	$ 3,717,842	$ 3,717,842	$ 3,717,842	$ 3,717,842	$ 3,717,842	$ 3,717,842	$ 3,717,842	$ 3,717,842	$ 3,717,842	$ 3,717,842	$ 3,717,842		
YTD Actual to Budget	0.07%	7.98%	18.15%	18.15%	18.15%	18.15%	18.15%	18.15%	18.15%	18.15%	18.15%	18.15%	18.15%		

Expenditures	July	August	September	October	November	December	January	February	March	April	May	June	Fiscal Accrual	*Total (Preliminary)*	YTD Actual to Budget
Salaries & Benefits		$ 2,822	$ 2,822											$ 5,644	11.29%
Prof/Prop Services/Misc	$ 7,623	$ 105,090	$ 38,948											$ 151,661	5.77%
Other Purch Svcs (Tuition, OE)														$ -	
Supplies, Capital Equipment	$ 13,097	$ 24,202	$ 12,205											$ 49,504	6.78%
Debt Service			$ 8,601,907											$ 8,601,907	63.19%
AEA Flowthrough														$ -	
Total Monthly Expenditures	$ 20,720	$ 132,114	$ 8,655,882	$ -	$ -	$ -	$ -	$ -	$ -	$ -	$ -	$ -	$ -	$ 8,808,716	51.75%
Total YTD Expenditures	$ 20,720	$ 152,834	$ 8,808,716	$ 8,808,716	$ 8,808,716	$ 8,808,716	$ 8,808,716	$ 8,808,716	$ 8,808,716	$ 8,808,716	$ 8,808,716	$ 8,808,716	$ 8,808,716		
YTD Actual to Budget	0.12%	0.90%	51.75%	51.75%	51.75%	51.75%	51.75%	51.75%	51.75%	51.75%	51.75%	51.75%	51.75%		
Excess (deficiency) of revenues over (under) expenditures														$ (5,090,874)	

Budget

Revenue	July	August	September	October	November	December	January	February	March	April	May	June	Fiscal Accrual	Total
State Aid														$ -
Property Taxes														$ -
Income Surtaxes														$ -
Sales Taxes		$ 1,545,081	$ 2,014,817	$ 1,600,000	$ 1,600,000	$ 1,600,000	$ 1,600,000	$ 1,600,000	$ 1,600,000	$ 1,600,000	$ 1,600,000	$ 1,600,000	$ 1,674,256	$ 19,634,154
Other State Funding														$ -
Federal Funds														$ -
Tuition and Transportation Fees														$ -
Other	$ 15,000	$ 76,000	$ 76,000	$ 76,000	$ 76,000	$ 76,000	$ 76,000	$ 76,000	$ 76,000	$ 76,000	$ 76,000	$ 75,000		$ 850,000
Total Monthly Revenues	$ 15,000	$ 1,621,081	$ 2,090,817	$ 1,676,000	$ 1,676,000	$ 1,676,000	$ 1,676,000	$ 1,676,000	$ 1,676,000	$ 1,676,000	$ 1,676,000	$ 1,675,000	$ 1,674,256	$ 20,484,154
Total YTD Revenues	$ 15,000	$ 1,636,081	$ 3,726,898	$ 5,402,898	$ 7,078,898	$ 8,754,898	$ 10,430,898	$ 12,106,898	$ 13,782,898	$ 15,458,898	$ 17,134,898	$ 18,809,898	$ 20,484,154	
Percent of Budget	0.07%	7.99%	18.19%	26.38%	34.56%	42.74%	50.92%	59.10%	67.29%	75.47%	83.65%	91.83%	100.00%	

Expenditures	July	August	September	October	November	December	January	February	March	April	May	June	Fiscal Accrual	Total
Salaries & Benefits	$ 4,166	$ 4,166	$ 4,166	$ 4,166	$ 4,166	$ 4,166	$ 4,166	$ 4,166	$ 4,166	$ 4,166	$ 4,166	$ 4,174		$ 50,000
Prof/Prop Services/Misc	$ 7,600	$ 105,000	$ 39,000	$ 500,000	$ 59,477	$ 225,000	$ 225,000	$ 225,000	$ 225,000	$ 225,000	$ 225,000	$ 225,000	$ 343,400	$ 2,629,477
Other Purch Svcs (Tuition, OE)														$ -
Supplies, Capital Equipment	$ 13,000	$ 24,000	$ 12,000	$ 160,000	$ 21,000						$ 500,000			$ 730,000
Debt Service			$ 8,601,907						$ 5,011,581					$ 13,613,488
AEA Flowthrough														$ -
Total Monthly Expenditures	$ 24,766	$ 133,166	$ 8,657,073	$ 664,166	$ 84,643	$ 229,166	$ 229,166	$ 229,166	$ 5,240,747	$ 229,166	$ 729,166	$ 229,174	$ 343,400	$ 17,022,965
Total YTD Expenditures	$ 24,766	$ 157,932	$ 8,815,005	$ 9,479,171	$ 9,563,814	$ 9,792,980	$ 10,022,146	$ 10,251,312	$ 15,492,059	$ 15,721,225	$ 16,450,391	$ 16,679,565	$ 17,022,965	
Percent of Budget	0.15%	0.93%	51.78%	55.68%	56.18%	57.53%	58.87%	60.22%	91.01%	92.35%	96.64%	97.98%	100.00%	
Excess (deficiency) of revenues over (under) expenditures														$ 3,461,189

Cash balance FY27	**$ 40,304,415**	**$ 41,708,759**	**$ 35,135,924**	$ -	$ -	$ -	$ -	$ -	$ -	$ -	$ -	$ -	
	includes bond reserve funds												
Cash balance FY26	$ 34,946,683	$ 36,317,138	$ 27,931,729	$ 29,495,035	$ 29,334,007	$ 32,559,336	$ 34,630,788	$ 36,006,150	$ 34,249,698	$ 35,948,313	$ 37,416,208	$ 38,486,182	

Monthly Actual Revenues, Expenditures and Budget Comparison Sioux City Community School District FY 2027- Nutrition Fund (Preliminary)

Actual

Revenue	July	August	September	October	November	December	January	February	March	April	May	June	Fiscal Accrual	*Total (Preliminary)*	YTD Actual to Budget
State Aid														$ -	
Property Taxes														$ -	
Income Surtaxes														$ -	
Sales Tax														$ -	
Other State Funding														$ -	0.00%
Federal Funds		$ 68,196	$ 246,277											$ 314,473	3.44%
Tuition and Transportation Fees														$ -	
Other	$ 41,101	$ 61,051	$ 209,171											$ 311,323	18.15%
Total Monthly Revenues	$ 41,101	$ 129,247	$ 455,448	$ -	$ -	$ -	$ -	$ -	$ -	$ -	$ -	$ -	$ -	$ 625,796	5.74%
Total YTD Revenues	$ 41,101	$ 170,348	$ 625,796	$ 625,796	$ 625,796	$ 625,796	$ 625,796	$ 625,796	$ 625,796	$ 625,796	$ 625,796	$ 625,796	$ 625,796		
YTD Actual to Budget	0.38%	1.56%	5.74%	5.74%	5.74%	5.74%	5.74%	5.74%	5.74%	5.74%	5.74%	5.74%	5.74%		

Expenditures	July	August	September	October	November	December	January	February	March	April	May	June	Fiscal Accrual	*Total (Preliminary)*	YTD Actual to Budget
Salaries & Benefits	$ 47,820	$ 84,283	$ 340,315											$ 472,418	9.18%
Prof/Prop Services/Misc	$ 34,706	$ 35,467	$ 44,237											$ 114,410	25.42%
Other Purch Svcs (Tuition, OE)														$ -	
Supplies, Capital Equipment	$ 34,728	$ 218,938	$ 326,238											$ 579,904	8.76%
Debt Service														$ -	
AEA Flowthrough														$ -	
Total Monthly Expenditures	$ 117,254	$ 338,688	$ 710,790	$ -	$ -	$ -	$ -	$ -	$ -	$ -	$ -	$ -	$ -	$ 1,166,732	9.55%
Total YTD Expenditures	$ 117,254	$ 455,942	$ 1,166,732	$ 1,166,732	$ 1,166,732	$ 1,166,732	$ 1,166,732	$ 1,166,732	$ 1,166,732	$ 1,166,732	$ 1,166,732	$ 1,166,732	$ 1,166,732		
YTD Actual to Budget	0.96%	3.73%	9.55%	9.55%	9.55%	9.55%	9.55%	9.55%	9.55%	9.55%	9.55%	9.55%	9.55%		
Excess (deficiency) of revenues over (under) expenditures														$ (540,936)	

Budget

Revenue	July	August	September	October	November	December	January	February	March	April	May	June	Fiscal Accrual	Total
State Aid														$ -
Property Taxes														$ -
Income Surtaxes														$ -
Sales Tax														$ -
Other State Funding						$ 15,000	$ 15,000		$ 15,000		$ 15,000			$ 60,000
Federal Funds		$ 68,000	$ 246,000	$ 960,000	$ 960,000	$ 960,000	$ 960,000	$ 960,000	$ 960,000	$ 960,000	$ 960,000	$ 960,000	$ 176,000	$ 9,130,000
Tuition and Transportation Fees														$ -
Other	$ 41,000	$ 61,000	$ 209,000	$ 170,000	$ 170,000	$ 164,000	$ 170,000	$ 170,000	$ 170,000	$ 170,000	$ 170,000	$ 50,000		$ 1,715,000
Total Monthly Revenues	$ 41,000	$ 129,000	$ 455,000	$ 1,130,000	$ 1,130,000	$ 1,139,000	$ 1,145,000	$ 1,130,000	$ 1,145,000	$ 1,130,000	$ 1,145,000	$ 1,010,000	$ 176,000	$ 10,905,000
Total YTD Revenues	$ 41,000	$ 170,000	$ 625,000	$ 1,755,000	$ 2,885,000	$ 4,024,000	$ 5,169,000	$ 6,299,000	$ 7,444,000	$ 8,574,000	$ 9,719,000	$ 10,729,000	$ 10,905,000	
Percent of Budget	0.38%	1.56%	5.73%	16.09%	26.46%	36.90%	47.40%	57.76%	68.26%	78.62%	89.12%	98.39%	100.00%	

Expenditures	July	August	September	October	November	December	January	February	March	April	May	June	Fiscal Accrual	Total
Salaries & Benefits	$ 48,000	$ 84,000	$ 363,500	$ 700,000	$ 500,000	$ 500,000	$ 400,000	$ 500,000	$ 500,000	$ 500,000	$ 700,000	$ 300,000	$ 50,000	$ 5,145,500
Prof/Prop Services/Misc	$ 35,000	$ 35,000	$ 44,000	$ 37,000	$ 37,000	$ 37,000	$ 37,000	$ 37,000	$ 37,000	$ 37,000	$ 37,000	$ 40,000		$ 450,000
Other Purch Svcs (Tuition, OE)														$ -
Supplies, Capital Equipment	35,000	219,000	326,000	705,000	705,000	705,000	705,000	705,000	705,000	705,000	705,000	200,000	$ 200,000	$ 6,620,000
Debt Service														$ -
AEA Flowthrough														$ -
Total Monthly Expenditures	$ 118,000	$ 338,000	$ 733,500	$ 1,442,000	$ 1,242,000	$ 1,242,000	$ 1,142,000	$ 1,242,000	$ 1,242,000	$ 1,242,000	$ 1,442,000	$ 540,000	$ 250,000	$ 12,215,500
Total YTD Expenditures	$ 118,000	$ 456,000	$ 1,189,500	$ 2,631,500	$ 3,873,500	$ 5,115,500	$ 6,257,500	$ 7,499,500	$ 8,741,500	$ 9,983,500	$ 11,425,500	$ 11,965,500	$ 12,215,500	
Percent of Budget	0.97%	3.73%	9.74%	21.54%	31.71%	41.88%	51.23%	61.39%	71.56%	81.73%	93.53%	97.95%	100.00%	
Excess (deficiency) of revenues over (under) expenditures														$ (1,310,500)

Cash balance FY7	**$ 4,139,347**	**$ 4,102,101**	**$ 3,603,047**	**$ -**	**$ -**	**$ -**	**$ -**	**$ -**	**$ -**	**$ -**	**$ -**	**$ -**	
Cash balance FY26	$ 4,702,751	$ 4,643,893	$ 3,753,863	$ 3,655,931	$ 2,812,966	$ 2,956,473	$ 3,735,671	$ 3,700,323	$ 3,753,484	$ 3,888,767	$ 3,687,415	$ 4,207,941	

Monthly Actual Revenues, Expenditures and Budget Comparison Sioux City Community School District FY 2027- All Funds (Preliminary)

Actual

Revenue	July	August	September	October	November	December	January	February	March	April	May	June	Fiscal Accrual	*Total (Preliminary)*	YTD Actual to Budget
State Aid	$ 36,437,889	$ 210,904	$ -	$ -	$ -	$ -	$ -	$ -	$ -	$ -	$ -	$ -	$ -	$ 36,648,793	**25.11%**
Property Taxes	$ -	$ 3,051	$ 2,242,697	$ -	$ -	$ -	$ -	$ -	$ -	$ -	$ -	$ -	$ -	$ 2,245,748	**5.11%**
Income Surtaxes	$ -	$ -	$ -	$ -	$ -	$ -	$ -	$ -	$ -	$ -	$ -	$ -	$ -	$ -	**0.00%**
Sales Tax	$ -	$ 1,545,081	$ 2,014,817	$ -	$ -	$ -	$ -	$ -	$ -	$ -	$ -	$ -	$ -	$ 3,559,898	**18.13%**
Other State Funding	$ -	$ 80,259	$ 50,466	$ -	$ -	$ -	$ -	$ -	$ -	$ -	$ -	$ -	$ -	$ 130,725	**4.17%**
Federal Funds	$ -	$ 68,196	$ 254,337	$ -	$ -	$ -	$ -	$ -	$ -	$ -	$ -	$ -	$ -	$ 322,533	**1.59%**
Tuition and Transportation Fees	$ 16,296	$ 30,944	$ 26,802	$ -	$ -	$ -	$ -	$ -	$ -	$ -	$ -	$ -	$ -	$ 74,042	**4.77%**
Other	$ 126,001	$ 672,209	$ 689,177	$ -	$ -	$ -	$ -	$ -	$ -	$ -	$ -	$ -	$ -	$ 1,487,387	**22.64%**
Total Monthly Revenues	$ 36,580,186	$ 2,610,644	$ 5,278,296	$ -	$ -	$ -	$ -	$ -	$ -	$ -	$ -	$ -	$ -	$ 44,469,126	**18.25%**
Total YTD Revenues	$ 36,580,186	$ 39,190,830	$ 44,469,126	$ 44,469,126	$ 44,469,126	$ 44,469,126	$ 44,469,126	$ 44,469,126	$ 44,469,126	$ 44,469,126	$ 44,469,126	$ 44,469,126	$ 44,469,126		
YTD Actual to Budget	15.01%	16.08%	18.25%	18.25%	18.25%	18.25%	18.25%	18.25%	18.25%	18.25%	18.25%	18.25%	18.25%		

Expenditures	July	August	September	October	November	December	January	February	March	April	May	June	Fiscal Accrual	*Total (Preliminary)*	YTD Actual to Budget
Salaries & Benefits	$ 3,115,415	$ 3,131,943	$ 13,953,019	$ -	$ -	$ -	$ -	$ -	$ -	$ -	$ -	$ -	$ -	$ 20,200,377	**11.27%**
Prof/Prop Services/Misc	$ 3,566,691	$ 554,775	$ 1,278,278	$ -	$ -	$ -	$ -	$ -	$ -	$ -	$ -	$ -	$ -	$ 5,399,744	**27.78%**
Other Purch Svcs (Tuition, OE)	$ -	$ 8,039	$ -	$ -	$ -	$ -	$ -	$ -	$ -	$ -	$ -	$ -	$ -	$ 8,039	**0.10%**
Supplies, Capital Equipment	$ 2,638,753	$ 2,101,020	$ 1,030,641	$ -	$ -	$ -	$ -	$ -	$ -	$ -	$ -	$ -	$ -	$ 5,770,414	**28.68%**
Debt Service	$ -	$ -	$ 8,601,907	$ -	$ -	$ -	$ -	$ -	$ -	$ -	$ -	$ -	$ -	$ 8,601,907	**63.19%**
AEA Flowthrough	$ 1,343,792	$ -	$ -	$ -	$ -	$ -	$ -	$ -	$ -	$ -	$ -	$ -	$ -	$ 1,343,792	**25.00%**
Total Monthly Expenditures	$ 10,664,651	$ 5,795,777	$ 24,863,845	$ -	$ -	$ -	$ -	$ -	$ -	$ -	$ -	$ -	$ -	$ 41,324,273	**16.80%**
Total YTD Expenditures	$ 10,664,651	$ 16,460,428	$ 41,324,273	$ 41,324,273	$ 41,324,273	$ 41,324,273	$ 41,324,273	$ 41,324,273	$ 41,324,273	$ 41,324,273	$ 41,324,273	$ 41,324,273	$ 41,324,273		
YTD Actual to Budget	4.33%	6.69%	16.80%	16.80%	16.80%	16.80%	16.80%	16.80%	16.80%	16.80%	16.80%	16.80%	16.80%		
Excess (deficiency) of revenues over (under) expenditures														$ 3,144,853	

Budget

Revenue	July	August	September	October	November	December	January	February	March	April	May	June	Fiscal Accrual	Total
State Aid	$ 36,437,889	$ 210,904	$ -	$ 36,437,889	$ -	$ -	$ 36,437,889	$ -	$ -	$ 36,437,889	$ -	$ -	$ 9,916	$ 145,972,376
Property Taxes	$ -	$ -	$ 2,240,000	$ 17,348,899	$ 2,650,000	$ 978,000	$ 362,000	$ 360,000	$ 795,000	$ 16,505,000	$ 1,816,631	$ 363,000	$ 522,000	$ 43,940,530
Income Surtaxes	$ -	$ -	$ -	$ -	$ -	$ 1,974,500	$ -	$ 658,190	$ -	$ -	$ -	$ -	$ -	$ 2,632,690
Sales Tax	$ -	$ 1,545,081	$ 2,014,817	$ 1,600,000	$ 1,600,000	$ 1,600,000	$ 1,600,000	$ 1,600,000	$ 1,600,000	$ 1,600,000	$ 1,600,000	$ 1,600,000	$ 1,674,256	$ 19,634,154
Other State Funding	$ -	$ 80,259	$ 50,466	$ 455,373	$ 350,231	$ 15,000	$ 715,000	$ -	$ 115,000	$ 555,372	$ 15,000	$ 82,420	$ 700,000	$ 3,134,121
Federal Funds	$ -	$ 68,000	$ 254,060	$ 1,210,000	$ 1,210,000	$ 1,510,000	$ 2,130,000	$ 2,760,000	$ 1,220,000	$ 1,360,000	$ 3,310,000	$ 1,320,000	$ 3,935,218	$ 20,287,278
Tuition and Transportation Fees	$ 16,000	$ 31,000	$ 27,000	$ 30,000	$ 20,000	$ 20,000	$ 20,000	$ 470,000	$ 186,000	$ 20,000	$ 20,000	$ 20,000	$ 671,000	$ 1,551,000
Other	$ 112,000	$ 672,000	$ 698,000	$ 546,000	$ 546,000	$ 540,000	$ 546,000	$ 546,000	$ 546,000	$ 546,000	$ 546,000	$ 425,000	$ 300,000	$ 6,569,000
Total Monthly Revenues	$ 36,565,889	$ 2,607,244	$ 5,284,343	$ 57,628,161	$ 6,376,231	$ 6,637,500	$ 41,810,889	$ 6,394,190	$ 4,462,000	$ 57,024,261	$ 7,307,631	$ 3,810,420	$ 7,812,390	$ 243,721,149
Total YTD Revenues	$ 36,565,889	$ 39,173,133	$ 44,457,476	$ 102,085,637	$ 108,461,868	$ 115,099,368	$ 156,910,257	$ 163,304,447	$ 167,766,447	$ 224,790,708	$ 232,098,339	$ 235,908,759	$ 243,721,149	
Percent of Budget	15.00%	16.07%	18.24%	41.89%	44.50%	47.23%	64.38%	67.00%	68.84%	92.23%	95.23%	96.79%	100.00%	

Expenditures	July	August	September	October	November	December	January	February	March	April	May	June	Fiscal Accrual	Total
Salaries & Benefits	$ 3,111,166	$ 3,138,166	$ 13,967,666	$ 16,743,166	$ 15,004,166	$ 15,004,166	$ 14,943,166	$ 15,004,166	$ 15,304,166	$ 15,043,166	$ 17,004,166	$ 33,304,174	$ 1,650,000	$ 179,221,500
Prof/Prop Services	$ 4,144,850	$ 554,000	$ 1,306,750	$ 1,217,000	$ 846,477	$ 1,280,750	$ 1,202,000	$ 1,170,750	$ 1,862,000	$ 1,002,000	$ 1,289,500	$ 1,565,000	$ 1,993,400	$ 19,434,477
Other Purch Svcs (Tuition, OE)	$ -	$ 8,000	$ -	$ -	$ -	$ -	$ 20,000	$ 3,800,000	$ 80,000	$ 35,000	$ 35,000	$ 1,300,000	$ 3,000,000	$ 8,278,000
Supplies, Capital Equipment	$ 2,638,925	$ 2,099,398	$ 1,031,715	$ 1,815,000	$ 1,238,462	$ 1,225,000	$ 1,375,000	$ 1,225,000	$ 1,325,000	$ 1,225,000	$ 1,925,000	$ 1,400,000	$ 1,600,000	$ 20,123,500
Debt Service	$ -	$ -	$ 8,601,907	$ -	$ -	$ -	$ -	$ -	$ 5,011,581	$ -	$ -	$ -	$ -	$ 13,613,488
AEA Flowthrough	$ 1,343,792	$ -	$ -	$ 1,343,792	$ -	$ -	$ 1,343,792	$ -	$ -	$ 1,343,792	$ -	$ -	$ -	$ 5,375,168
Total Monthly Expenditures	$ 11,238,733	$ 5,799,564	$ 24,908,038	$ 21,118,958	$ 17,089,105	$ 17,509,916	$ 18,883,958	$ 21,199,916	$ 23,582,747	$ 18,648,958	$ 20,253,666	$ 37,569,174	$ 8,243,400	$ 246,046,133
Total YTD Expenditures	$ 11,238,733	$ 17,038,297	$ 41,946,335	$ 63,065,293	$ 80,154,398	$ 97,664,314	$ 116,548,272	$ 137,748,188	$ 161,330,935	$ 179,979,893	$ 200,233,559	$ 237,802,733	$ 246,046,133	
Percent of Budget	4.57%	6.92%	17.05%	25.63%	32.58%	39.69%	47.37%	55.98%	65.57%	73.15%	81.38%	96.65%	100.00%	
Excess (deficiency) of revenues over (under) expenditures														$ (2,324,984)

SIOUX CITY COMMUNITY SCHOOLS
CHECK REGISTER - BY FUND

SELECTION CRITERIA: transact.account<'8000' and transact.ck_date between '20261009' and '20261021'
ACCOUNTING PERIOD: 4/27

FUND - 10 - GENERAL FUND

CASH ACCT	CHECK NO	ISSUE DT	VENDOR	NAME	ORGANIZATION	ACCNT	----DESCRIPTION----	SALES TAX	AMOUNT
7101	V2936	10/14/26	55672	NORMAN BROWN	1020011009200000	0345	10/5 NMS FB OFFICIA	0.00	110.00
7101	V2936	10/14/26	55672	NORMAN BROWN	1020011009200000	0345	10/6 WMS FB OFFICIA	0.00	110.00
TOTAL CHECK								0.00	220.00
7101	V2937	10/14/26	58145	CARSON DELANEY CLAY	1010022132173303	0583	NONVIOLENT CRSIS EV	0.00	383.40
7101	V2938	10/14/26	56272	NICOLE ERICKSON	1020011009200000	0345	9/29 NMS VB OFFICIA	0.00	100.00
7101	V2938	10/14/26	56272	NICOLE ERICKSON	1020011009200000	0345	9/30 NMS VB OFFICIA	0.00	100.00
TOTAL CHECK								0.00	200.00
7101	V2939	10/14/26	55327	MACKENZIE L HISEROT	1030022133904531	0583	OPPORTUNITY CENTRAL	0.00	435.07
7101	V2940	10/14/26	181531	REBECCA A RIEKEN	1030022133904531	0583	OPPORTUNITY CENTRAL	0.00	223.32
7101	V2941	10/14/26	56153	STANTON SCHAUFF	1020011009200000	0345	10/6 WMS FB OFFICIA	0.00	110.00
7101	V2942	10/14/26	54183	MICHELE SCHORG	1020011009200000	0345	9/29 NMS VB OFFICIA	0.00	100.00
7101	V2942	10/14/26	54183	MICHELE SCHORG	1020011009200000	0345	9/30 NMS VB OFFICIA	0.00	100.00
TOTAL CHECK								0.00	200.00
7101	V2943	10/14/26	19826	RONALD STOWERS	1020011009200000	0345	10/1 EMS FB OFFICIA	0.00	110.00
7101	V2943	10/14/26	19826	RONALD STOWERS	1020011009200000	0345	10/6 WMS FB OFFICIA	0.00	110.00
TOTAL CHECK								0.00	220.00
7101	V2945	10/21/26	04021	TRACEY BADAR	1020011009200000	0345	10/8 NMS FB OFFICIA	0.00	110.00
7101	V2946	10/21/26	02042	KEITH BAKER	1020011009200000	0345	10/6 EMS FB OFFICIA	0.00	110.00
7101	V2947	10/21/26	03458	JASON COWLEY	1020011009200000	0345	10/7 EMS CC OFFICIA	0.00	300.00
7101	V2948	10/21/26	04197	AMY A DENNEY	1000025740000000	0582	ACT READINESS WRKSH	0.00	415.42
7101	V2949	10/21/26	56240	MARK FEINER	1020011009200000	0345	10/6 EMS FB OFFICIA	0.00	110.00
7101	V2950	10/21/26	182783	KATY A RUSH	1030611003500000	0612	10/6 FAREWAY REFUND	0.00	65.69
7101	299563	10/09/26	55868	ABANTE MARKETING, A	1020011009200000	0618	OTHER GEN SUPPLIES	0.00	670.00
7101	299563	10/09/26	55868	ABANTE MARKETING, A	1020011009200000	0618	OTHER GEN SUPPLIES	0.00	46.20
TOTAL CHECK								0.00	716.20
7101	299564	10/09/26	01110	AHLERS & COONEY, PC	1000023170000000	0342	LEGAL SERVICES	0.00	1,510.50
7101	299564	10/09/26	01110	AHLERS & COONEY, PC	1000023160000000	0342	LEGAL SERVICES	0.00	384.00
7101	299564	10/09/26	01110	AHLERS & COONEY, PC	1000023170000000	0342	LEGAL SERVICES	0.00	3,627.00
7101	299564	10/09/26	01110	AHLERS & COONEY, PC	1000023170000000	0342	LEGAL SERVICES	0.00	4,588.50
TOTAL CHECK								0.00	10,110.00
7101	299567	10/09/26	012152	AMAZON CAPITAL SERV	1021111001080000	0612	INSTRUCTIONAL SUPPL	0.00	-344.85
7101	299567	10/09/26	012152	AMAZON CAPITAL SERV	1030222220000000	0618	OTHER GENERAL SUPPL	0.00	-268.00
7101	299567	10/09/26	012152	AMAZON CAPITAL SERV	1021111001130000	0612	INSTRUCTIONAL SUPPL	0.00	-113.76
7101	299567	10/09/26	012152	AMAZON CAPITAL SERV	1021712002123301	0612	INSTRUCTIONAL SUPPL	0.00	14.85
7101	299567	10/09/26	012152	AMAZON CAPITAL SERV	1013412002173303	0618	OTHER GENERAL SUPPL	0.00	-31.72

SELECTION CRITERIA: transact.account<'8000' and transact.ck_date between '20261009' and '20261021'
ACCOUNTING PERIOD: 4/27

FUND - 10 - GENERAL FUND

CASH ACCT	CHECK NO	ISSUE DT	VENDOR	NAME	ORGANIZATION	ACCNT	----DESCRIPTION----	SALES TAX	AMOUNT
7101	299567	10/09/26	012152	AMAZON CAPITAL SERV	10302110037000000	0612	INSTRUCTIONAL SUPPL	0.00	-22.12
7101	299567	10/09/26	012152	AMAZON CAPITAL SERV	10211110010800000	0612	INSTRUCTIONAL SUPPL	0.00	-21.99
7101	299567	10/09/26	012152	AMAZON CAPITAL SERV	10211110011300000	0612	INSTRUCTIONAL SUPPL	0.00	-17.00
7101	299567	10/09/26	012152	AMAZON CAPITAL SERV	10000232900000000	0611	OFFICE SUPPLIES	0.00	6.31
7101	299567	10/09/26	012152	AMAZON CAPITAL SERV	10149120021733030	0612	INSTRUCTIONAL SUPPL	0.00	8.54
7101	299567	10/09/26	012152	AMAZON CAPITAL SERV	10149120047011180	0612	INSTRUCTIONAL SUPPL	0.00	12.99
7101	299567	10/09/26	012152	AMAZON CAPITAL SERV	10217222200000000	0643	LIBRARY BOOKS	0.00	14.97
7101	299567	10/09/26	012152	AMAZON CAPITAL SERV	10157110010200000	0612	INSTRUCTIONAL SUPPL	0.00	18.37
7101	299567	10/09/26	012152	AMAZON CAPITAL SERV	10211110011600000	0612	INSTRUCTIONAL SUPPL	0.00	19.75
7101	299567	10/09/26	012152	AMAZON CAPITAL SERV	10217110011600000	0612	INSTRUCTIONAL SUPPL	0.00	19.75
7101	299567	10/09/26	012152	AMAZON CAPITAL SERV	10157120047011180	0612	INSTRUCTIONAL SUPPL	0.00	25.25
7101	299567	10/09/26	012152	AMAZON CAPITAL SERV	10157120047011180	0612	INSTRUCTIONAL SUPPL	0.00	25.25
7101	299567	10/09/26	012152	AMAZON CAPITAL SERV	10220110011300000	0612	INSTRUCTIONAL SUPPL	0.00	28.99
7101	299567	10/09/26	012152	AMAZON CAPITAL SERV	10000221300000000	0613	PD SUPPLIES	0.00	33.99
7101	299567	10/09/26	012152	AMAZON CAPITAL SERV	10157110010000000	0612	INSTRUCTIONAL SUPPL	0.00	38.59
7101	299567	10/09/26	012152	AMAZON CAPITAL SERV	10220110011600000	0612	INSTRUCTIONAL SUPPL	0.00	39.50
7101	299567	10/09/26	012152	AMAZON CAPITAL SERV	10217110011300000	0612	INSTRUCTIONAL SUPPL	0.00	42.80
7101	299567	10/09/26	012152	AMAZON CAPITAL SERV	10302110011300000	0612	INSTRUCTIONAL SUPPL	0.00	42.95
7101	299567	10/09/26	012152	AMAZON CAPITAL SERV	10156120021133010	0612	INSTRUCTIONAL SUPPL	0.00	46.78
7101	299567	10/09/26	012152	AMAZON CAPITAL SERV	10134110010000000	0612	INSTRUCTIONAL SUPPL	0.00	52.73
7101	299567	10/09/26	012152	AMAZON CAPITAL SERV	10300110034500000	0612	INSTRUCTIONAL SUPPL	0.00	52.96
7101	299567	10/09/26	012152	AMAZON CAPITAL SERV	10157110010000000	0612	INSTRUCTIONAL SUPPL	0.00	59.45
7101	299567	10/09/26	012152	AMAZON CAPITAL SERV	10217110010000000	0612	INSTRUCTIONAL SUPPL	0.00	61.74
7101	299567	10/09/26	012152	AMAZON CAPITAL SERV	10220222200000000	0643	LIBRARY BOOKS	0.00	65.35
7101	299567	10/09/26	012152	AMAZON CAPITAL SERV	10159110011300000	0612	INSTRUCTIONAL SUPPL	0.00	66.12
7101	299567	10/09/26	012152	AMAZON CAPITAL SERV	10211222200000000	0618	OTHER GENERAL SUPPL	0.00	75.78
7101	299567	10/09/26	012152	AMAZON CAPITAL SERV	10000262000000000	0611	OFFICE SUPPLIES	0.00	95.59
7101	299567	10/09/26	012152	AMAZON CAPITAL SERV	10211110010000000	0612	INSTRUCTIONAL SUPPL	0.00	90.19
7101	299567	10/09/26	012152	AMAZON CAPITAL SERV	10302110035000000	0612	INSTRUCTIONAL SUPPL	0.00	106.00
7101	299567	10/09/26	012152	AMAZON CAPITAL SERV	10302120021733030	0612	INSTRUCTIONAL SUPPL	0.00	107.41
7101	299567	10/09/26	012152	AMAZON CAPITAL SERV	10306241000000000	0611	OFFICE SUPPLIES	0.00	109.52
7101	299567	10/09/26	012152	AMAZON CAPITAL SERV	10000258600088770	0618	OTHER GENERAL SUPPL	0.00	128.58
7101	299567	10/09/26	012152	AMAZON CAPITAL SERV	10152241000000000	0618	OTHER GENERAL SUPPL	0.00	132.55
7101	299567	10/09/26	012152	AMAZON CAPITAL SERV	10155120021133010	0612	INSTRUCTIONAL SUPPL	0.00	146.52
7101	299567	10/09/26	012152	AMAZON CAPITAL SERV	10149120047011180	0612	INSTRUCTIONAL SUPPL	0.00	159.33
7101	299567	10/09/26	012152	AMAZON CAPITAL SERV	10124110046031170	0612	INSTRUCTIONAL SUPPL	0.00	165.00
7101	299567	10/09/26	012152	AMAZON CAPITAL SERV	10156120047011180	0612	INSTRUCTIONAL SUPPL	0.00	166.25
7101	299567	10/09/26	012152	AMAZON CAPITAL SERV	10156120021733030	0612	INSTRUCTIONAL SUPPL	0.00	168.85
7101	299567	10/09/26	012152	AMAZON CAPITAL SERV	10306241000000000	0611	OFFICE SUPPLIES	0.00	171.27
7101	299567	10/09/26	012152	AMAZON CAPITAL SERV	10133110010000000	0612	INSTRUCTIONAL SUPPL	0.00	172.96
7101	299567	10/09/26	012152	AMAZON CAPITAL SERV	10145120021133010	0612	INSTRUCTIONAL SUPPL	0.00	183.59
7101	299567	10/09/26	012152	AMAZON CAPITAL SERV	10000265000000000	0683	MAINTENANCE SUPPLY	0.00	187.99
7101	299567	10/09/26	012152	AMAZON CAPITAL SERV	10122241000000000	0618	OTHER GENERAL SUPPL	0.00	188.25
7101	299567	10/09/26	012152	AMAZON CAPITAL SERV	10000263000000000	0683	MAINTENANCE SUPPLY	0.00	189.95
7101	299567	10/09/26	012152	AMAZON CAPITAL SERV	10000257100000000	0618	OTHER GENERAL SUPPL	0.00	206.34
7101	299567	10/09/26	012152	AMAZON CAPITAL SERV	10305110037000000	0612	INSTRUCTIONAL SUPPL	0.00	209.44
7101	299567	10/09/26	012152	AMAZON CAPITAL SERV	10300120021733030	0612	INSTRUCTIONAL SUPPL	0.00	374.85
7101	299567	10/09/26	012152	AMAZON CAPITAL SERV	10000257500000000	0618	OTHER GENERAL SUPPL	0.00	416.10
7101	299567	10/09/26	012152	AMAZON CAPITAL SERV	10305110010000000	0612	INSTRUCTIONAL SUPPL	0.00	452.80
7101	299567	10/09/26	012152	AMAZON CAPITAL SERV	10000267000000000	0683	MAINTENANCE SUPPLY	0.00	459.78
7101	299567	10/09/26	012152	AMAZON CAPITAL SERV	10302222200000000	0618	OTHER GENERAL SUPPL	0.00	468.73

SIOUX CITY COMMUNITY SCHOOLS
CHECK REGISTER - BY FUND

SELECTION CRITERIA: transact.account<'8000' and transact.ck_date between '20261009' and '20261021'
ACCOUNTING PERIOD: 4/27

FUND - 10 - GENERAL FUND

CASH ACCT	CHECK NO	ISSUE DT	VENDOR	NAME	ORGANIZATION	ACCNT	----DESCRIPTION----	SALES TAX	AMOUNT
7101	299567	10/09/26	012152	AMAZON CAPITAL SERV	1015611001000000	0612	INSTRUCTIONAL SUPPL	0.00	617.25
7101	299567	10/09/26	012152	AMAZON CAPITAL SERV	1030012002173303	0612	INSTRUCTIONAL SUPPL	0.00	935.58
7101	299567	10/09/26	012152	AMAZON CAPITAL SERV	1020012002173303	0612	INSTRUCTIONAL SUPPL	0.00	1,193.93
7101	299567	10/09/26	012152	AMAZON CAPITAL SERV	1030011003254531	0612	INSTRUCTIONAL SUPPL	0.00	1,285.76
7101	299567	10/09/26	012152	AMAZON CAPITAL SERV	1000025710000000	0618	OTHER GENERAL SUPPL	0.00	98.22
TOTAL CHECK								0.00	9,442.90
7101	299568	10/09/26	54084	ANCORA PUBLISHING	1000022131004643	0332	PROFESSIONAL DEVELO	0.00	24,000.00
7101	299568	10/09/26	54084	ANCORA PUBLISHING	1000022131004643	0332	PROFESSIONAL DEVELO	0.00	1,173.63
TOTAL CHECK								0.00	25,173.63
7101	299569	10/09/26	014521	APPLE TREE PRESCHOO	1080611004603117	0323	OCTOBER PREK	0.00	3,096.24
7101	299569	10/09/26	014521	APPLE TREE PRESCHOO	1081111004603117	0323	OCTOBER PREK	0.00	6,192.48
TOTAL CHECK								0.00	9,288.72
7101	299570	10/09/26	600760	ARNOLD MOTOR SUPPLY	1000026500000000	0683	MAINTENANCE SUPPLIE	0.00	425.52
7101	299570	10/09/26	600760	ARNOLD MOTOR SUPPLY	1000027401000000	0670	SUPPLIES	0.00	40.36
TOTAL CHECK								0.00	465.88
7101	299571	10/09/26	01557	ARTISAN PRESS	1000025710000000	0618	OTHER GEN SUPPLIES	0.00	950.00
7101	299572	10/09/26	01013	A-TEC RECYCLING INC	1000026200000000	0421	WASTE DISPOSAL	0.00	753.10
7101	299573	10/09/26	02006	B B'S PRESCHOOL & C	1014911004603117	0323	OCTOBER PREK	0.00	6,966.54
7101	299574	10/09/26	600693	BENCHMARK EDUCATION	1013311001050000	0641	BEC BENCHMARK ADVAN	0.00	3,728.75
7101	299574	10/09/26	600693	BENCHMARK EDUCATION	1013311001050000	0641	ESTIMATED SHIPPING/	0.00	372.88
7101	299574	10/09/26	600693	BENCHMARK EDUCATION	1015611001050000	0641	BEC BENCHMARK ADVAN	0.00	3,728.75
7101	299574	10/09/26	600693	BENCHMARK EDUCATION	1015611001050000	0641	ESTIMATED SHIPPING/	0.00	372.88
7101	299574	10/09/26	600693	BENCHMARK EDUCATION	1012211001050000	0641	BEC BENCHMARK ADVAN	0.00	3,728.75
7101	299574	10/09/26	600693	BENCHMARK EDUCATION	1012211001050000	0641	ESTIMATED SHIPPING/	0.00	372.88
TOTAL CHECK								0.00	12,304.89
7101	299575	10/09/26	55094	BILL'S AUTO PARTS	1000026500000000	0682	PARTS	0.00	412.08
7101	299575	10/09/26	55094	BILL'S AUTO PARTS	1000026500000000	0682	PARTS	0.00	206.80
7101	299575	10/09/26	55094	BILL'S AUTO PARTS	1000026500000000	0682	PARTS	0.00	224.64
7101	299575	10/09/26	55094	BILL'S AUTO PARTS	1000026500000000	0683	MAINTENANCE SUPPLY	0.00	125.45
7101	299575	10/09/26	55094	BILL'S AUTO PARTS	1000026200000000	0683	MAINTENANCE SUPPLY	0.00	106.09
TOTAL CHECK								0.00	1,075.06
7101	299576	10/09/26	02405	BRIGGS, INC	1000026200000000	0683	MAINTENANCE SUPPLIE	0.00	10.19
7101	299577	10/09/26	02493	BUILDING BLOCKS CHI	1098611004603117	0323	OCTOBER PREK	0.00	8,901.69
7101	299578	10/09/26	02525	BURKE ENGINEERING C	1022026200000000	0682	PARTS	0.00	109.60
7101	299578	10/09/26	02525	BURKE ENGINEERING C	1014126200000000	0682	PARTS	0.00	110.65
7101	299578	10/09/26	02525	BURKE ENGINEERING C	1015526200000000	0682	PARTS	0.00	117.50
7101	299578	10/09/26	02525	BURKE ENGINEERING C	1015526200000000	0682	PARTS	0.00	105.00
7101	299578	10/09/26	02525	BURKE ENGINEERING C	1030626200000000	0682	PARTS	0.00	65.00
7101	299578	10/09/26	02525	BURKE ENGINEERING C	1014126200000000	0682	PARTS	0.00	254.00
7101	299578	10/09/26	02525	BURKE ENGINEERING C	1015526200000000	0682	PARTS	0.00	549.36

SELECTION CRITERIA: transact.account<'8000' and transact.ck_date between '20261009' and '20261021'
ACCOUNTING PERIOD: 4/27

FUND - 10 - GENERAL FUND

CASH ACCT	CHECK NO	ISSUE DT	VENDOR	NAME	ORGANIZATION	ACCNT	----DESCRIPTION----	SALES TAX	AMOUNT
7101	299578	10/09/26	02525	BURKE ENGINEERING C	1030526200000000	0682	PARTS	0.00	550.00
TOTAL CHECK								0.00	1,861.11
7101	299579	10/09/26	03024	CALICO KIDS PRESCHO	1098711004603117	0323	OCTOBER PREK	0.00	5,031.39
7101	299580	10/09/26	000598	CDW GOVERNMENT INC	1012211001008877	0612	REPLACEMENT IPAD CA	0.00	363.04
7101	299580	10/09/26	000598	CDW GOVERNMENT INC	1013411001008877	0612	REPLACEMENT IPAD CA	0.00	363.04
7101	299580	10/09/26	000598	CDW GOVERNMENT INC	1014011001008877	0612	REPLACEMENT IPAD CA	0.00	363.04
7101	299580	10/09/26	000598	CDW GOVERNMENT INC	1014111001008877	0612	REPLACEMENT IPAD CA	0.00	363.04
7101	299580	10/09/26	000598	CDW GOVERNMENT INC	1014511001008877	0612	REPLACEMENT IPAD CA	0.00	363.04
7101	299580	10/09/26	000598	CDW GOVERNMENT INC	1014911001008877	0612	REPLACEMENT IPAD CA	0.00	363.04
7101	299580	10/09/26	000598	CDW GOVERNMENT INC	1015211001008877	0612	REPLACEMENT IPAD CA	0.00	363.04
7101	299580	10/09/26	000598	CDW GOVERNMENT INC	1015511001008877	0612	REPLACEMENT IPAD CA	0.00	363.04
7101	299580	10/09/26	000598	CDW GOVERNMENT INC	1015711001008877	0612	REPLACEMENT IPAD CA	0.00	363.04
7101	299580	10/09/26	000598	CDW GOVERNMENT INC	1015811001008877	0612	REPLACEMENT IPAD CA	0.00	363.04
7101	299580	10/09/26	000598	CDW GOVERNMENT INC	1015911001008877	0612	REPLACEMENT IPAD CA	0.00	363.04
7101	299580	10/09/26	000598	CDW GOVERNMENT INC	1015611001008877	0612	REPLACEMENT IPAD CA	0.00	544.56
TOTAL CHECK								0.00	4,538.00
7101	299581	10/09/26	03144	CENGAGE LEARNING	1015811001070000	0642	PANORAMA: SOCIAL ST	0.00	260.00
7101	299581	10/09/26	03144	CENGAGE LEARNING	1015811001070000	0642	ESTIMATED SHIPPING/	0.00	13.00
7101	299581	10/09/26	03144	CENGAGE LEARNING	1015511001070000	0642	LIBERTY	0.00	260.00
7101	299581	10/09/26	03144	CENGAGE LEARNING	1015511001070000	0642	LIBERTY	0.00	13.00
7101	299581	10/09/26	03144	CENGAGE LEARNING	1014011001070000	0642	PANORAMA: SOCIAL ST	0.00	100.00
7101	299581	10/09/26	03144	CENGAGE LEARNING	1014011001070000	0642	ESTIMATED SHIPPING/	0.00	5.00
7101	299581	10/09/26	03144	CENGAGE LEARNING	1015211001070000	0642	PANORAMA: SOCIAL ST	0.00	280.00
7101	299581	10/09/26	03144	CENGAGE LEARNING	1015211001070000	0642	ESTIMATED SHIPPING/	0.00	14.00
TOTAL CHECK								0.00	945.00
7101	299582	10/09/26	54130	CENTRAL RIVERS AEA	1000022370008877	0594	MAINT SERVICES	0.00	86.00
7101	299583	10/09/26	031991	CHARLESTON, INC	1012426200000000	0682	PARTS	0.00	698.97
7101	299583	10/09/26	031991	CHARLESTON, INC	1012426200000000	0682	PARTS	0.00	192.72
7101	299583	10/09/26	031991	CHARLESTON, INC	1030626200000000	0682	PARTS	0.00	34.06
7101	299583	10/09/26	031991	CHARLESTON, INC	1030626200000000	0682	PARTS	0.00	11.20
TOTAL CHECK								0.00	936.95
7101	299584	10/09/26	03217	CHESTERMAN CO.	1000023210000000	0892	WATER	0.00	153.75
7101	299585	10/09/26	03263	CITY OF SIOUX CITY	1000026200000000	0490	AUGUST SKYWALK	0.00	7,780.20
7101	299586	10/09/26	03264	CITY OF SIOUX CITY	1000027901008003	0519	MONTHLY TICKETS	0.00	2,000.00
7101	299587	10/09/26	03265	CITY OF SIOUX CITY	1030226200000000	0411	AUGUST WATER	0.00	13.05
7101	299587	10/09/26	03265	CITY OF SIOUX CITY	1030526200000000	0411	AUGUST WATER	0.00	17.40
7101	299587	10/09/26	03265	CITY OF SIOUX CITY	1000026200000000	0411	AUGUST WATER	0.00	16,417.00
7101	299587	10/09/26	03265	CITY OF SIOUX CITY	1030026200000000	0411	AUGUST WATER	0.00	674.42
7101	299587	10/09/26	03265	CITY OF SIOUX CITY	1030526200000000	0411	AUGUST WATER	0.00	941.78
7101	299587	10/09/26	03265	CITY OF SIOUX CITY	1030526200000000	0411	AUGUST WATER	0.00	983.38
7101	299587	10/09/26	03265	CITY OF SIOUX CITY	1013326200000000	0411	AUGUST WATER	0.00	1,483.54
7101	299587	10/09/26	03265	CITY OF SIOUX CITY	1012226200000000	0411	AUGUST WATER	0.00	1,833.43

SELECTION CRITERIA: transact.account<'8000' and transact.ck_date between '20261009' and '20261021'
ACCOUNTING PERIOD: 4/27

FUND - 10 - GENERAL FUND

CASH ACCT	CHECK NO	ISSUE DT	VENDOR	NAME	ORGANIZATION	ACCNT	----DESCRIPTION----	SALES TAX	AMOUNT
7101	299587	10/09/26	03265	CITY OF SIOUX CITY	1015626200000000	0411	AUGUST WATER	0.00	2,199.33
7101	299587	10/09/26	03265	CITY OF SIOUX CITY	1015526200000000	0411	AUGUST WATER	0.00	2,538.46
TOTAL CHECK								0.00	27,101.79
7101	299588	10/09/26	03328	CNOS	1030221329200000	0347	EHS AT CONTRACTS	0.00	3,202.78
7101	299588	10/09/26	03328	CNOS	1030521329200000	0347	NHS AT CONTRACTS	0.00	3,202.78
7101	299588	10/09/26	03328	CNOS	1030621329200000	0347	WHS AT CONTRACTS	0.00	3,202.78
TOTAL CHECK								0.00	9,608.34
7101	299589	10/09/26	54930	COLE PAPERS INC	1000027201000000	0670	SUPPLIES	0.00	203.90
7101	299589	10/09/26	54930	COLE PAPERS INC	1030226400000000	0682	PARTS	0.00	63.90
7101	299589	10/09/26	54930	COLE PAPERS INC	1000027201000000	0670	SUPPLIES	0.00	48.26
TOTAL CHECK								0.00	316.06
7101	299590	10/09/26	56551	COLUMN SOFTWARE, PB	1000023110000000	0543	9/28 BM MINUTES	0.00	184.04
7101	299591	10/09/26	23442	COMMUNITY ACTION AG	1081711004603117	0323	OCTOBER PREK	0.00	13,159.02
7101	299591	10/09/26	23442	COMMUNITY ACTION AG	1015411004603117	0323	OCTOBER PREK	0.00	29,801.31
7101	299591	10/09/26	23442	COMMUNITY ACTION AG	1082411004603117	0323	OCTOBER PREK	0.00	6,579.51
7101	299591	10/09/26	23442	COMMUNITY ACTION AG	1015211004603117	0323	OCTOBER PREK	0.00	6,966.54
7101	299591	10/09/26	23442	COMMUNITY ACTION AG	1015711004603117	0323	OCTOBER PREK	0.00	6,966.54
7101	299591	10/09/26	23442	COMMUNITY ACTION AG	1081011004603117	0323	OCTOBER PREK	0.00	6,966.54
TOTAL CHECK								0.00	70,439.46
7101	299592	10/09/26	034722	CORNHUSKER INTERNAT	1000027401000000	0673	PARTS	0.00	165.60
7101	299592	10/09/26	034722	CORNHUSKER INTERNAT	1000027401000000	0673	PARTS	0.00	1,303.69
TOTAL CHECK								0.00	1,469.29
7101	299594	10/09/26	03543	CRANE SALES AND SER	1007126400000000	0433	LIFT INSPECTIONS	0.00	18.95
7101	299594	10/09/26	03543	CRANE SALES AND SER	1030026400000000	0433	LIFT INSPECTIONS	0.00	56.81
7101	299594	10/09/26	03543	CRANE SALES AND SER	1007126400000000	0433	INSPECTION	0.00	242.38
7101	299594	10/09/26	03543	CRANE SALES AND SER	1030026400000000	0433	INSPECTION	0.00	727.15
7101	299594	10/09/26	03543	CRANE SALES AND SER	1000026400000000	0433	O&M SERVICE CALL	0.00	37.87
7101	299594	10/09/26	03543	CRANE SALES AND SER	1000026400000000	0433	INSPECTION	0.00	242.38
7101	299594	10/09/26	03543	CRANE SALES AND SER	1030226400000000	0433	EHS SERVICE CALL	0.00	37.87
7101	299594	10/09/26	03543	CRANE SALES AND SER	1030226400000000	0433	INSPECTION	0.00	121.19
TOTAL CHECK								0.00	1,484.60
7101	299595	10/09/26	57706	CREATIVE SITES	1015211004603117	0739	PRESCHOOL PLAYGROUN	0.00	17,905.00
7101	299596	10/09/26	03581	CRITTENTON CENTER	1015511004603117	0323	OCTOBER PREK	0.00	7,353.57
7101	299596	10/09/26	03581	CRITTENTON CENTER	1082111004603117	0323	OCTOBER PREK	0.00	3,870.30
7101	299596	10/09/26	03581	CRITTENTON CENTER	1096311004603117	0323	OCTOBER PREK	0.00	4,644.36
TOTAL CHECK								0.00	15,868.23
7101	299597	10/09/26	03608	CULLIGAN OF SIOUX C	1013326200000000	0432	SERVICE	0.00	379.00
7101	299599	10/09/26	57229	D&Z TRANSPORT	1030527901008003	0515	9/16-9/30 SS TRANSI	0.00	352.00
7101	299599	10/09/26	57229	D&Z TRANSPORT	1015627902183303	0515	9/16-9/30 SPED TRAN	0.00	132.00
7101	299599	10/09/26	57229	D&Z TRANSPORT	1015627902183303	0515	9/16-9/30 SPED TRAN	0.00	132.00
7101	299599	10/09/26	57229	D&Z TRANSPORT	1030527902183303	0515	9/16-9/30 SPED TRAN	0.00	396.00

SELECTION CRITERIA: transact.account<'8000' and transact.ck_date between '20261009' and '20261021'
ACCOUNTING PERIOD: 4/27

FUND - 10 - GENERAL FUND

CASH ACCT	CHECK NO	ISSUE DT	VENDOR	NAME	ORGANIZATION	ACCNT	----DESCRIPTION----	SALES TAX	AMOUNT
7101	299599	10/09/26	57229	D&Z TRANSPORT	1030027902153302	0515	9/16-9/30 SPED TRAN	0.00	418.00
7101	299599	10/09/26	57229	D&Z TRANSPORT	1030627902153302	0515	9/16-9/30 SPED TRAN	0.00	440.00
7101	299599	10/09/26	57229	D&Z TRANSPORT	1030527902153302	0515	9/16-9/30 SPED TRAN	0.00	440.00
7101	299599	10/09/26	57229	D&Z TRANSPORT	1022027902183303	0515	9/16-9/30 SPED TRAN	0.00	462.00
7101	299599	10/09/26	57229	D&Z TRANSPORT	1014127902183303	0515	9/16-9/30 SPED TRAN	0.00	484.00
7101	299599	10/09/26	57229	D&Z TRANSPORT	1030527902183303	0515	9/16-9/30 SPED TRAN	0.00	484.00
7101	299599	10/09/26	57229	D&Z TRANSPORT	1013327902183303	0515	9/16-9/30 SPED TRAN	0.00	484.00
7101	299599	10/09/26	57229	D&Z TRANSPORT	1013427902183303	0515	9/16-9/30 SPED TRAN	0.00	484.00
7101	299599	10/09/26	57229	D&Z TRANSPORT	1013427902183303	0515	9/16-9/30 SPED TRAN	0.00	484.00
7101	299599	10/09/26	57229	D&Z TRANSPORT	1015927902183303	0515	9/16-9/30 SPED TRAN	0.00	484.00
7101	299599	10/09/26	57229	D&Z TRANSPORT	1030627902183303	0515	9/16-9/30 SPED TRAN	0.00	484.00
7101	299599	10/09/26	57229	D&Z TRANSPORT	1014127902183303	0515	9/16-9/30 SPED TRAN	0.00	638.00
7101	299599	10/09/26	57229	D&Z TRANSPORT	1022027901008003	0515	9/16-9/30 SS TRANSI	0.00	198.00
7101	299599	10/09/26	57229	D&Z TRANSPORT	1015627902183303	0515	9/16-9/30 SPED TRAN	0.00	174.00
7101	299599	10/09/26	57229	D&Z TRANSPORT	1014127902123301	0515	9/16-9/30 SPED TRAN	0.00	66.00
7101	299599	10/09/26	57229	D&Z TRANSPORT	1013427902123301	0515	9/16-9/30 SPED TRAN	0.00	198.00
7101	299599	10/09/26	57229	D&Z TRANSPORT	1013427902153302	0515	9/16-9/30 SPED TRAN	0.00	198.00
7101	299599	10/09/26	57229	D&Z TRANSPORT	1021127902183303	0515	9/16-9/30 SPED TRAN	0.00	203.00
7101	299599	10/09/26	57229	D&Z TRANSPORT	1030627902153302	0515	9/16-9/30 SPED TRAN	0.00	220.00
7101	299599	10/09/26	57229	D&Z TRANSPORT	1012427902383303	0515	9/16-9/30 SPED TRAN	0.00	220.00
7101	299599	10/09/26	57229	D&Z TRANSPORT	1021727902183303	0515	9/16-9/30 SPED TRAN	0.00	242.00
7101	299599	10/09/26	57229	D&Z TRANSPORT	1012427902383303	0515	9/16-9/30 SPED TRAN	0.00	242.00
7101	299599	10/09/26	57229	D&Z TRANSPORT	1022027902183303	0515	9/16-9/30 SPED TRAN	0.00	242.00
7101	299599	10/09/26	57229	D&Z TRANSPORT	1030627902183303	0515	9/16-9/30 SPED TRAN	0.00	242.00
7101	299599	10/09/26	57229	D&Z TRANSPORT	1030227902183303	0515	9/16-9/30 SPED TRAN	0.00	286.00
7101	299599	10/09/26	57229	D&Z TRANSPORT	1012427902383303	0515	9/16-9/30 SPED TRAN	0.00	290.00
7101	299599	10/09/26	57229	D&Z TRANSPORT	1014127902153302	0515	9/16-9/30 SPED TRAN	0.00	44.00
TOTAL CHECK								0.00	9,863.00
7101	299600	10/09/26	04177	DEMCO	1021122220000000	0618	OTHER GEN SUPPLIES	0.00	130.60
7101	299601	10/09/26	04185	DENNIS SUPPLY CO	1000026200000000	0682	PARTS	0.00	23.52
7101	299601	10/09/26	04185	DENNIS SUPPLY CO	1000026200000000	0682	PARTS	0.00	302.44
7101	299601	10/09/26	04185	DENNIS SUPPLY CO	1030626200000000	0682	PARTS	0.00	313.16
7101	299601	10/09/26	04185	DENNIS SUPPLY CO	1021126200000000	0683	MAINTENANCE SUPPLIE	0.00	177.76
TOTAL CHECK								0.00	816.88
7101	299602	10/09/26	56517	DEVEREUX ADVANCED B	1021712002173303	0569	LEVEL III TUITION	0.00	3,360.50
7101	299603	10/09/26	56071	DOCUMENT DEPOT & DE	1015924100000000	0349	SHREDDING	0.00	53.90
7101	299604	10/09/26	04375	TOBII DYNAVOX	1013411004314501	0652	BOARDMAKER PERSONAL	0.00	99.00
7101	299609	10/09/26	01276	EAKES OFFICE PLUS	1014111001000000	0612	SEPTEMBER SUPPLIES	0.00	26.18
7101	299609	10/09/26	01276	EAKES OFFICE PLUS	1000021900008003	0618	SEPTEMBER SUPPLIES	0.00	26.42
7101	299609	10/09/26	01276	EAKES OFFICE PLUS	1000025100000000	0618	SEPTEMBER SUPPLIES	0.00	27.00
7101	299609	10/09/26	01276	EAKES OFFICE PLUS	1030211001000000	0612	SEPTEMBER SUPPLIES	0.00	30.92
7101	299609	10/09/26	01276	EAKES OFFICE PLUS	1012224100000000	0611	SEPTEMBER SUPPLIES	0.00	33.99
7101	299609	10/09/26	01276	EAKES OFFICE PLUS	1015611001000000	0612	SEPTEMBER SUPPLIES	0.00	34.71
7101	299609	10/09/26	01276	EAKES OFFICE PLUS	1021724100000000	0618	SEPTEMBER SUPPLIES	0.00	38.67
7101	299609	10/09/26	01276	EAKES OFFICE PLUS	1000026400000000	0682	PARTS	0.00	445.28

SELECTION CRITERIA: transact.account<'8000' and transact.ck_date between '20261009' and '20261021'
ACCOUNTING PERIOD: 4/27

FUND - 10 - GENERAL FUND

CASH ACCT	CHECK NO	ISSUE DT	VENDOR	NAME	ORGANIZATION	ACCNT	----DESCRIPTION----	SALES TAX	AMOUNT
7101	299609	10/09/26	01276	EAKES OFFICE PLUS	1015611001000000	0612	SEPTEMBER SUPPLIES	0.00	43.88
7101	299609	10/09/26	01276	EAKES OFFICE PLUS	1021724100000000	0618	SEPTEMBER SUPPLIES	0.00	51.04
7101	299609	10/09/26	01276	EAKES OFFICE PLUS	1030624100000000	0611	SEPTEMBER SUPPLIES	0.00	53.68
7101	299609	10/09/26	01276	EAKES OFFICE PLUS	1014111001000000	0612	SEPTEMBER SUPPLIES	0.00	55.06
7101	299609	10/09/26	01276	EAKES OFFICE PLUS	1012224100000000	0611	SEPTEMBER SUPPLIES	0.00	57.66
7101	299609	10/09/26	01276	EAKES OFFICE PLUS	1015611001000000	0612	SEPTEMBER SUPPLIES	0.00	60.25
7101	299609	10/09/26	01276	EAKES OFFICE PLUS	1000023210000000	0611	SEPTEMBER SUPPLIES	0.00	67.13
7101	299609	10/09/26	01276	EAKES OFFICE PLUS	1015911001000000	0612	SEPTEMBER SUPPLIES	0.00	73.00
7101	299609	10/09/26	01276	EAKES OFFICE PLUS	1012224100000000	0611	SEPTEMBER SUPPLIES	0.00	73.80
7101	299609	10/09/26	01276	EAKES OFFICE PLUS	1015711001000000	0612	SEPTEMBER SUPPLIES	0.00	75.40
7101	299609	10/09/26	01276	EAKES OFFICE PLUS	1012424104600000	0611	SEPTEMBER SUPPLIES	0.00	82.80
7101	299609	10/09/26	01276	EAKES OFFICE PLUS	1015724100000000	0618	SEPTEMBER SUPPLIES	0.00	88.42
7101	299609	10/09/26	01276	EAKES OFFICE PLUS	1000022134124644	0613	SEPTEMBER SUPPLIES	0.00	90.48
7101	299609	10/09/26	01276	EAKES OFFICE PLUS	1015711001000000	0612	SEPTEMBER SUPPLIES	0.00	100.72
7101	299609	10/09/26	01276	EAKES OFFICE PLUS	1015911001000000	0612	SEPTEMBER SUPPLIES	0.00	102.20
7101	299609	10/09/26	01276	EAKES OFFICE PLUS	1021711001000000	0612	SEPTEMBER SUPPLIES	0.00	104.36
7101	299609	10/09/26	01276	EAKES OFFICE PLUS	1012224100000000	0611	SEPTEMBER SUPPLIES	0.00	112.40
7101	299609	10/09/26	01276	EAKES OFFICE PLUS	1012224100000000	0611	SEPTEMBER SUPPLIES	0.00	114.46
7101	299609	10/09/26	01276	EAKES OFFICE PLUS	1015911001000000	0612	SEPTEMBER SUPPLIES	0.00	116.80
7101	299609	10/09/26	01276	EAKES OFFICE PLUS	1012224100000000	0611	SEPTEMBER SUPPLIES	0.00	117.55
7101	299609	10/09/26	01276	EAKES OFFICE PLUS	1012224100000000	0611	SEPTEMBER SUPPLIES	0.00	129.37
7101	299609	10/09/26	01276	EAKES OFFICE PLUS	1007125100000000	0611	SEPTEMBER SUPPLIES	0.00	176.49
7101	299609	10/09/26	01276	EAKES OFFICE PLUS	1012224100000000	0611	SEPTEMBER SUPPLIES	0.00	204.25
7101	299609	10/09/26	01276	EAKES OFFICE PLUS	1000025100000000	0618	SEPTEMBER SUPPLIES	0.00	291.28
7101	299609	10/09/26	01276	EAKES OFFICE PLUS	1015524100000000	0618	SEPTEMBER SUPPLIES	0.00	304.89
7101	299609	10/09/26	01276	EAKES OFFICE PLUS	1015811001000000	0612	SEPTEMBER SUPPLIES	0.00	345.41
7101	299609	10/09/26	01276	EAKES OFFICE PLUS	1015211001000000	0612	SEPTEMBER SUPPLIES	0.00	364.10
7101	299609	10/09/26	01276	EAKES OFFICE PLUS	1012224100000000	0611	SEPTEMBER SUPPLIES	0.00	420.02
7101	299609	10/09/26	01276	EAKES OFFICE PLUS	1012224100000000	0611	SEPTEMBER SUPPLIES	0.00	574.68
7101	299609	10/09/26	01276	EAKES OFFICE PLUS	1007125100000000	0611	SEPTEMBER SUPPLIES	0.00	722.61
7101	299609	10/09/26	01276	EAKES OFFICE PLUS	1013411001000000	0612	SEPTEMBER SUPPLIES	0.00	888.85
7101	299609	10/09/26	01276	EAKES OFFICE PLUS	1015611001000000	0612	SEPTEMBER SUPPLIES	0.00	910.25
7101	299609	10/09/26	01276	EAKES OFFICE PLUS	1015511001000000	0612	SEPTEMBER SUPPLIES	0.00	2,730.75
7101	299609	10/09/26	01276	EAKES OFFICE PLUS	1022024100000000	0618	SEPTEMBER SUPPLIES	0.00	3.60
7101	299609	10/09/26	01276	EAKES OFFICE PLUS	1021711001000000	0612	SEPTEMBER SUPPLIES	0.00	14.66
7101	299609	10/09/26	01276	EAKES OFFICE PLUS	1015811001000000	0612	SEPTEMBER SUPPLIES	0.00	16.57
7101	299609	10/09/26	01276	EAKES OFFICE PLUS	1015211001000000	0612	SEPTEMBER SUPPLIES	0.00	20.22
7101	299609	10/09/26	01276	EAKES OFFICE PLUS	1000026200000000	0684	SEPTEMBER SUPPLIES	0.00	4.45
7101	299609	10/09/26	01276	EAKES OFFICE PLUS	1014526200000000	0684	SEPTEMBER SUPPLIES	0.00	5.69
7101	299609	10/09/26	01276	EAKES OFFICE PLUS	1021126200000000	0684	SEPTEMBER SUPPLIES	0.00	11.01
7101	299609	10/09/26	01276	EAKES OFFICE PLUS	1015726200000000	0684	SEPTEMBER SUPPLIES	0.00	11.28
7101	299609	10/09/26	01276	EAKES OFFICE PLUS	1014526200000000	0684	SEPTEMBER SUPPLIES	0.00	15.04
7101	299609	10/09/26	01276	EAKES OFFICE PLUS	1022026200000000	0684	SEPTEMBER SUPPLIES	0.00	20.72
7101	299609	10/09/26	01276	EAKES OFFICE PLUS	1022026200000000	0684	SEPTEMBER SUPPLIES	0.00	20.72
7101	299609	10/09/26	01276	EAKES OFFICE PLUS	1021726200000000	0684	SEPTEMBER SUPPLIES	0.00	21.02
7101	299609	10/09/26	01276	EAKES OFFICE PLUS	1022026200000000	0684	SEPTEMBER SUPPLIES	0.00	22.42
7101	299609	10/09/26	01276	EAKES OFFICE PLUS	1015226200000000	0684	SEPTEMBER SUPPLIES	0.00	22.56
7101	299609	10/09/26	01276	EAKES OFFICE PLUS	1012226200000000	0684	SEPTEMBER SUPPLIES	0.00	27.92
7101	299609	10/09/26	01276	EAKES OFFICE PLUS	1014526200000000	0684	SEPTEMBER SUPPLIES	0.00	28.15
7101	299609	10/09/26	01276	EAKES OFFICE PLUS	1015826200000000	0684	SEPTEMBER SUPPLIES	0.00	29.96
7101	299609	10/09/26	01276	EAKES OFFICE PLUS	1030626200000000	0684	SEPTEMBER SUPPLIES	0.00	30.08

SIOUX CITY COMMUNITY SCHOOLS
CHECK REGISTER - BY FUND

SELECTION CRITERIA: transact.account<'8000' and transact.ck_date between '20261009' and '20261021'
ACCOUNTING PERIOD: 4/27

FUND - 10 - GENERAL FUND

CASH ACCT	CHECK NO	ISSUE DT	VENDOR	NAME	ORGANIZATION	ACCNT	----DESCRIPTION----	SALES TAX	AMOUNT
7101	299609	10/09/26	01276	EAKES OFFICE PLUS	1030026200000000	0684	SEPTEMBER SUPPLIES	0.00	31.76
7101	299609	10/09/26	01276	EAKES OFFICE PLUS	1015626200000000	0684	SEPTEMBER SUPPLIES	0.00	37.37
7101	299609	10/09/26	01276	EAKES OFFICE PLUS	1030626200000000	0684	SEPTEMBER SUPPLIES	0.00	39.50
7101	299609	10/09/26	01276	EAKES OFFICE PLUS	1015826200000000	0684	SEPTEMBER SUPPLIES	0.00	39.50
7101	299609	10/09/26	01276	EAKES OFFICE PLUS	1030526200000000	0684	SEPTEMBER SUPPLIES	0.00	40.08
7101	299609	10/09/26	01276	EAKES OFFICE PLUS	1007126200000000	0684	SEPTEMBER SUPPLIES	0.00	56.22
7101	299609	10/09/26	01276	EAKES OFFICE PLUS	1015826200000000	0684	SEPTEMBER SUPPLIES	0.00	63.72
7101	299609	10/09/26	01276	EAKES OFFICE PLUS	1015726200000000	0684	SEPTEMBER SUPPLIES	0.00	65.60
7101	299609	10/09/26	01276	EAKES OFFICE PLUS	1022026200000000	0684	SEPTEMBER SUPPLIES	0.00	81.79
7101	299609	10/09/26	01276	EAKES OFFICE PLUS	1007126200000000	0684	SEPTEMBER SUPPLIES	0.00	87.14
7101	299609	10/09/26	01276	EAKES OFFICE PLUS	1012426200000000	0684	SEPTEMBER SUPPLIES	0.00	421.74
7101	299609	10/09/26	01276	EAKES OFFICE PLUS	1014526200000000	0684	SEPTEMBER SUPPLIES	0.00	435.25
7101	299609	10/09/26	01276	EAKES OFFICE PLUS	1013326200000000	0684	SEPTEMBER SUPPLIES	0.00	574.20
7101	299609	10/09/26	01276	EAKES OFFICE PLUS	1015826200000000	0684	SEPTEMBER SUPPLIES	0.00	574.26
7101	299609	10/09/26	01276	EAKES OFFICE PLUS	1030026200000000	0684	SEPTEMBER SUPPLIES	0.00	575.53
7101	299609	10/09/26	01276	EAKES OFFICE PLUS	1015811001000000	0612	SEPTEMBER SUPPLIES	0.00	21.00
7101	299609	10/09/26	01276	EAKES OFFICE PLUS	1015724100000000	0611	SEPTEMBER SUPPLIES	0.00	23.76
7101	299609	10/09/26	01276	EAKES OFFICE PLUS	1012224100000000	0611	SEPTEMBER SUPPLIES	0.00	24.09
7101	299609	10/09/26	01276	EAKES OFFICE PLUS	1000025710000000	0618	SEPTEMBER SUPPLIES	0.00	24.34
7101	299609	10/09/26	01276	EAKES OFFICE PLUS	1015811001000000	0612	SEPTEMBER SUPPLIES	0.00	25.99
7101	299609	10/09/26	01276	EAKES OFFICE PLUS	1015726200000000	0684	SEPTEMBER SUPPLIES	0.00	1,681.54
7101	299609	10/09/26	01276	EAKES OFFICE PLUS	1030226200000000	0684	SEPTEMBER SUPPLIES	0.00	1,711.93
7101	299609	10/09/26	01276	EAKES OFFICE PLUS	1030226200000000	0684	SEPTEMBER SUPPLIES	0.00	1,711.93
7101	299609	10/09/26	01276	EAKES OFFICE PLUS	1030226200000000	0684	SEPTEMBER SUPPLIES	0.00	1,753.82
7101	299609	10/09/26	01276	EAKES OFFICE PLUS	1030626200000000	0684	SEPTEMBER SUPPLIES	0.00	1,919.20
7101	299609	10/09/26	01276	EAKES OFFICE PLUS	1030526200000000	0684	SEPTEMBER SUPPLIES	0.00	2,024.24
7101	299609	10/09/26	01276	EAKES OFFICE PLUS	1021726200000000	0684	SEPTEMBER SUPPLIES	0.00	97.90
7101	299609	10/09/26	01276	EAKES OFFICE PLUS	1021726200000000	0684	SEPTEMBER SUPPLIES	0.00	113.36
7101	299609	10/09/26	01276	EAKES OFFICE PLUS	1015226200000000	0684	SEPTEMBER SUPPLIES	0.00	121.99
7101	299609	10/09/26	01276	EAKES OFFICE PLUS	1014526200000000	0684	SEPTEMBER SUPPLIES	0.00	131.63
7101	299609	10/09/26	01276	EAKES OFFICE PLUS	1000026200000000	0684	SEPTEMBER SUPPLIES	0.00	142.94
7101	299609	10/09/26	01276	EAKES OFFICE PLUS	1000026200000000	0684	SEPTEMBER SUPPLIES	0.00	173.80
7101	299609	10/09/26	01276	EAKES OFFICE PLUS	1000026200000000	0684	SEPTEMBER SUPPLIES	0.00	178.64
7101	299609	10/09/26	01276	EAKES OFFICE PLUS	1000026200000000	0684	SEPTEMBER SUPPLIES	0.00	213.38
7101	299609	10/09/26	01276	EAKES OFFICE PLUS	1015626200000000	0684	SEPTEMBER SUPPLIES	0.00	227.61
7101	299609	10/09/26	01276	EAKES OFFICE PLUS	1022026200000000	0684	SEPTEMBER SUPPLIES	0.00	336.00
7101	299609	10/09/26	01276	EAKES OFFICE PLUS	1014026200000000	0684	SEPTEMBER SUPPLIES	0.00	347.48
7101	299609	10/09/26	01276	EAKES OFFICE PLUS	1022026200000000	0684	SEPTEMBER SUPPLIES	0.00	355.36
7101	299609	10/09/26	01276	EAKES OFFICE PLUS	1015826200000000	0684	SEPTEMBER SUPPLIES	0.00	364.65
7101	299609	10/09/26	01276	EAKES OFFICE PLUS	1013426200000000	0684	SEPTEMBER SUPPLIES	0.00	598.87
7101	299609	10/09/26	01276	EAKES OFFICE PLUS	1014926200000000	0684	SEPTEMBER SUPPLIES	0.00	617.12
7101	299609	10/09/26	01276	EAKES OFFICE PLUS	1014126200000000	0684	SEPTEMBER SUPPLIES	0.00	677.57
7101	299609	10/09/26	01276	EAKES OFFICE PLUS	1015226200000000	0684	SEPTEMBER SUPPLIES	0.00	1,199.52
7101	299609	10/09/26	01276	EAKES OFFICE PLUS	1015526200000000	0684	SEPTEMBER SUPPLIES	0.00	1,234.61
7101	299609	10/09/26	01276	EAKES OFFICE PLUS	1012226200000000	0684	SEPTEMBER SUPPLIES	0.00	1,250.98
7101	299609	10/09/26	01276	EAKES OFFICE PLUS	1022026200000000	0684	SEPTEMBER SUPPLIES	0.00	1,430.72
7101	299609	10/09/26	01276	EAKES OFFICE PLUS	1021726200000000	0684	SEPTEMBER SUPPLIES	0.00	1,560.38
TOTAL CHECK								0.00	36,113.29
7101	299610	10/09/26	57718	ECHO ELECTRIC	1007126200000000	0682	PARTS	0.00	52.48
7101	299610	10/09/26	57718	ECHO ELECTRIC	1013326200000000	0683	MAINTENANCE SUPPLIE	0.00	707.94

SIOUX CITY COMMUNITY SCHOOLS
CHECK REGISTER - BY FUND

SELECTION CRITERIA: transact.account<'8000' and transact.ck_date between '20261009' and '20261021'
ACCOUNTING PERIOD: 4/27

FUND - 10 - GENERAL FUND

CASH ACCT	CHECK NO	ISSUE DT	VENDOR	NAME	ORGANIZATION	ACCNT	----DESCRIPTION----	SALES TAX	AMOUNT
7101	299610	10/09/26	57718	ECHO ELECTRIC	1015726200000000	0683	MAINTENANCE SUPPLIE	0.00	366.84
7101	299610	10/09/26	57718	ECHO ELECTRIC	1030226200000000	0682	PARTS	0.00	9.00
7101	299610	10/09/26	57718	ECHO ELECTRIC	1030226200000000	0683	MAINTENANCE SUPPLIE	0.00	136.37
7101	299610	10/09/26	57718	ECHO ELECTRIC	1000026200000000	0682	PARTS	0.00	73.16
7101	299610	10/09/26	57718	ECHO ELECTRIC	1000026200000000	0683	MAINTENANCE SUPPLIE	0.00	23.75
7101	299610	10/09/26	57718	ECHO ELECTRIC	1015826200000000	0682	PARTS	0.00	30.90
7101	299610	10/09/26	57718	ECHO ELECTRIC	1030626200000000	0682	PARTS	0.00	33.62
TOTAL CHECK								0.00	1,434.06
7101	299611	10/09/26	05206	ELECTRONIC ENGINEER	1000027401000000	0670	SUPPLIES	0.00	123.96
7101	299611	10/09/26	05206	ELECTRONIC ENGINEER	1000027401000000	0673	PARTS	0.00	179.22
TOTAL CHECK								0.00	303.18
7101	299612	10/09/26	54408	FACTS EDUCATION SOL	1051211004314501	0323	SUPPLEMENTAL INSTRU	0.00	275.91
7101	299612	10/09/26	54408	FACTS EDUCATION SOL	1051211004314501	0323	DISTRICT ADMINISTRA	0.00	13.80
7101	299612	10/09/26	54408	FACTS EDUCATION SOL	1051011004314501	0323	SUPPLEMENTAL INSTRU	0.00	602.82
7101	299612	10/09/26	54408	FACTS EDUCATION SOL	1050611004314501	0323	SUPPLEMENTAL INSTRU	0.00	649.94
7101	299612	10/09/26	54408	FACTS EDUCATION SOL	1050411004314501	0323	SUPPLEMENTAL INSTRU	0.00	822.06
7101	299612	10/09/26	54408	FACTS EDUCATION SOL	1051411004314501	0323	SUPPLEMENTAL INSTRU	0.00	893.01
7101	299612	10/09/26	54408	FACTS EDUCATION SOL	1050211004314501	0323	SUPPLEMENTAL INSTRU	0.00	2,086.36
7101	299612	10/09/26	54408	FACTS EDUCATION SOL	1050511004314501	0323	SUPPLEMENTAL INSTRU	0.00	2,870.93
7101	299612	10/09/26	54408	FACTS EDUCATION SOL	1051011004314501	0323	5% FEE FOR INSTRUCT	0.00	30.15
7101	299612	10/09/26	54408	FACTS EDUCATION SOL	1050611004314501	0323	5% FEE FOR INSTRUCT	0.00	32.49
7101	299612	10/09/26	54408	FACTS EDUCATION SOL	1050411004314501	0323	5% FEE FOR INSTRUCT	0.00	41.10
7101	299612	10/09/26	54408	FACTS EDUCATION SOL	1051411004314501	0323	5% FEE FOR INSTRUCT	0.00	44.65
7101	299612	10/09/26	54408	FACTS EDUCATION SOL	1050211004314501	0323	5% FEE FOR INSTRUCT	0.00	104.32
7101	299612	10/09/26	54408	FACTS EDUCATION SOL	1050511004314501	0323	5% FEE FOR INSTRUCT	0.00	143.55
TOTAL CHECK								0.00	8,611.09
7101	299613	10/09/26	06360	FLINN SCIENTIFIC CO	10302110011300000	0612	EAST HIGH SCHOOL- A	0.00	53.95
7101	299613	10/09/26	06360	FLINN SCIENTIFIC CO	10302110011300000	0612	ALUMINUM NITRATE 0.	0.00	42.70
7101	299613	10/09/26	06360	FLINN SCIENTIFIC CO	10302110011300000	0612	IRON (III) NITRATE	0.00	42.70
7101	299613	10/09/26	06360	FLINN SCIENTIFIC CO	10302110011300000	0612	SILVER NITRATE 1.0M	0.00	377.10
7101	299613	10/09/26	06360	FLINN SCIENTIFIC CO	10302110011300000	0612	SODIUM SULFATE, ANH	0.00	32.92
7101	299613	10/09/26	06360	FLINN SCIENTIFIC CO	10302110011300000	0612	SODIUM HYDROXIDE 6M	0.00	43.16
7101	299613	10/09/26	06360	FLINN SCIENTIFIC CO	10302110011300000	0612	SODIUM CHLORIDE REA	0.00	116.95
7101	299613	10/09/26	06360	FLINN SCIENTIFIC CO	10302110011300000	0612	SODIUM CARBONATE, A	0.00	44.98
7101	299613	10/09/26	06360	FLINN SCIENTIFIC CO	10302110011300000	0612	SODIUM PHOSPHATE- M	0.00	35.09
7101	299613	10/09/26	06360	FLINN SCIENTIFIC CO	10302110011300000	0612	SODIUM PHOSPHATE- M	0.00	105.27
7101	299613	10/09/26	06360	FLINN SCIENTIFIC CO	10302110011300000	0612	IRON METAL- FILINGS	0.00	40.49
7101	299613	10/09/26	06360	FLINN SCIENTIFIC CO	10302110011300000	0612	ACETIC ACID, REAGEN	0.00	71.99
7101	299613	10/09/26	06360	FLINN SCIENTIFIC CO	10302110011300000	0612	SODIUM BICARBONATE	0.00	48.58
7101	299613	10/09/26	06360	FLINN SCIENTIFIC CO	10302110011300000	0612	PHENOLPHTHALEIN 1%	0.00	29.84
7101	299613	10/09/26	06360	FLINN SCIENTIFIC CO	10302110011300000	0612	TEST STRIPS, DIP &	0.00	296.80
7101	299613	10/09/26	06360	FLINN SCIENTIFIC CO	10302110011300000	0612	LITMUS BLUE TEST PA	0.00	34.00
7101	299613	10/09/26	06360	FLINN SCIENTIFIC CO	10302110011300000	0612	LITMUS RED TEST PAP	0.00	32.20
7101	299613	10/09/26	06360	FLINN SCIENTIFIC CO	10302110011300000	0612	GLOVES, NITRILE DIS	0.00	112.45
7101	299613	10/09/26	06360	FLINN SCIENTIFIC CO	10302110011300000	0612	MAGNESIUM METAL RIB	0.00	76.45
7101	299613	10/09/26	06360	FLINN SCIENTIFIC CO	10302110011300000	0612	ALUMINUM SHOT 500 G	0.00	72.87
7101	299613	10/09/26	06360	FLINN SCIENTIFIC CO	10302110011300000	0612	CHARCOAL COCONUT 50	0.00	172.76
7101	299613	10/09/26	06360	FLINN SCIENTIFIC CO	10302110011300000	0612	COPPER WIRE 22 GAUG	0.00	139.45

SIOUX CITY COMMUNITY SCHOOLS
CHECK REGISTER - BY FUND

SELECTION CRITERIA: transact.account<'8000' and transact.ck_date between '20261009' and '20261021'
ACCOUNTING PERIOD: 4/27

FUND - 10 - GENERAL FUND

CASH ACCT	CHECK NO	ISSUE DT	VENDOR	NAME	ORGANIZATION	ACCNT	----DESCRIPTION----	SALES TAX	AMOUNT
7101	299613	10/09/26	06360	FLINN SCIENTIFIC CO	10302110011300000	0612	IRON STRIPS PKG/10	0.00	65.20
7101	299613	10/09/26	06360	FLINN SCIENTIFIC CO	10302110011300000	0612	IRON WIRE 18 GAUGE	0.00	188.95
7101	299613	10/09/26	06360	FLINN SCIENTIFIC CO	10302110011300000	0612	LEAD STRIPS 6/PKG	0.00	55.30
7101	299613	10/09/26	06360	FLINN SCIENTIFIC CO	10302110011300000	0612	SILICON LUMPS 500 G	0.00	45.89
7101	299613	10/09/26	06360	FLINN SCIENTIFIC CO	10302110011300000	0612	SULFUR BRIGHT YELLO	0.00	60.70
7101	299613	10/09/26	06360	FLINN SCIENTIFIC CO	10302110011300000	0612	TIN STRIPS PKG/6	0.00	35.95
7101	299613	10/09/26	06360	FLINN SCIENTIFIC CO	10302110011300000	0612	ZINC STRIPS 10/PKG	0.00	80.05
7101	299613	10/09/26	06360	FLINN SCIENTIFIC CO	10302110011300000	0612	LITHIUM CHLORIDE RE	0.00	294.30
7101	299613	10/09/26	06360	FLINN SCIENTIFIC CO	10302110011300000	0612	COPPER (II) CHLORID	0.00	75.57
7101	299613	10/09/26	06360	FLINN SCIENTIFIC CO	10302110011300000	0612	CALCIUM CHLORIDE RE	0.00	80.97
7101	299613	10/09/26	06360	FLINN SCIENTIFIC CO	10302110011300000	0612	BARIUM CHLORIDE REA	0.00	89.07
7101	299613	10/09/26	06360	FLINN SCIENTIFIC CO	10302110011300000	0612	STRONTIUM CHLORIDE	0.00	110.67
7101	299613	10/09/26	06360	FLINN SCIENTIFIC CO	10302110011300000	0612	POTASSIUM CHLORIDE	0.00	53.97
7101	299613	10/09/26	06360	FLINN SCIENTIFIC CO	10302110011300000	0612	& HYDROCHLORIC ACID	0.00	41.39
7101	299613	10/09/26	06360	FLINN SCIENTIFIC CO	10302110011300000	0612	COPPER (II) SULFATE	0.00	250.20
7101	299613	10/09/26	06360	FLINN SCIENTIFIC CO	10302110011300000	0612	COPPER (II) SULFATE	0.00	38.84
7101	299613	10/09/26	06360	FLINN SCIENTIFIC CO	10302110011300000	0612	SODIUM CARBONATE AN	0.00	44.96
7101	299613	10/09/26	06360	FLINN SCIENTIFIC CO	10302110011300000	0612	DISHES WEIGHING 0.5	0.00	121.45
7101	299613	10/09/26	06360	FLINN SCIENTIFIC CO	10302110011300000	0612	HYDROGEN PEROXIDE 3	0.00	269.90
7101	299613	10/09/26	06360	FLINN SCIENTIFIC CO	10302110011300000	0612	FLINN PERIODIC TABL	0.00	94.47
7101	299613	10/09/26	06360	FLINN SCIENTIFIC CO	10302110011300000	0612	LITHIUM STICKS, 10G	0.00	124.18
7101	299613	10/09/26	06360	FLINN SCIENTIFIC CO	10302110011300000	0612	POTASSIUM 5 SMALL	0.00	125.98
7101	299613	10/09/26	06360	FLINN SCIENTIFIC CO	10302110011300000	0612	ALCONOX, 4 LB	0.00	134.98
7101	299613	10/09/26	06360	FLINN SCIENTIFIC CO	10302110011300000	0612	FILTER PAPER, QUALI	0.00	62.05
7101	299613	10/09/26	06360	FLINN SCIENTIFIC CO	10302110011300000	0612	FUNNELS, UTILITY 4-	0.00	40.92
7101	299613	10/09/26	06360	FLINN SCIENTIFIC CO	10302110011300000	0612	HAZARD FEE	0.00	32.00
7101	299613	10/09/26	06360	FLINN SCIENTIFIC CO	10306110011300000	0652	FLINN ONLINE CHEMVE	0.00	32.99
7101	299613	10/09/26	06360	FLINN SCIENTIFIC CO	10302110011300000	0652	FLINN ONLINE CHEMVE	0.00	33.00
7101	299613	10/09/26	06360	FLINN SCIENTIFIC CO	10305110011300000	0652	FLINN ONLINE CHEMVE	0.00	33.00
TOTAL CHECK								0.00	4,739.60
7101	299614	10/09/26	06677	FRESHWORKS, INC	10000258400088 77	0652	TECH SOFTWARE	0.00	86.75
7101	299614	10/09/26	06677	FRESHWORKS, INC	10000258400088 77	0652	TECH SOFTWARE	0.00	1,713.25
TOTAL CHECK								0.00	1,800.00
7101	299615	10/09/26	07260	GRAINGER	10306262000000 00	0682	PARTS	0.00	234.57
7101	299616	10/09/26	600121	H2O 4 U	10211241000000 00	0892	WATER	0.00	43.60
7101	299617	10/09/26	55250	HIRSHFIELD'S INC	10124262000000 00	0683	MAINTENANCE SUPPLIE	0.00	59.94
7101	299617	10/09/26	55250	HIRSHFIELD'S INC	10211262000000 00	0683	MAINTENANCE SUPPLIE	0.00	162.00
7101	299617	10/09/26	55250	HIRSHFIELD'S INC	10157262000000 00	0683	MAINTENANCE SUPPLIE	0.00	127.89
7101	299617	10/09/26	55250	HIRSHFIELD'S INC	10211262000000 00	0683	MAINTENANCE SUPPLIE	0.00	116.36
7101	299617	10/09/26	55250	HIRSHFIELD'S INC	10211262000000 00	0683	MAINTENANCE SUPPLIE	0.00	93.19
7101	299617	10/09/26	55250	HIRSHFIELD'S INC	10000262000000 00	0683	MAINTENANCE SUPPLIE	0.00	39.84
7101	299617	10/09/26	55250	HIRSHFIELD'S INC	10211262000000 00	0683	MAINTENANCE SUPPLIE	0.00	14.78
TOTAL CHECK								0.00	614.00
7101	299618	10/09/26	08505	HYDRAULIC SALES AND	10000264000000 00	0682	PARTS	0.00	108.30
7101	299619	10/09/26	57093	INTERSTATE BATTERY	10000266000000 00	0682	PARTS	0.00	68.82

SELECTION CRITERIA: transact.account<'8000' and transact.ck_date between '20261009' and '20261021'
ACCOUNTING PERIOD: 4/27

FUND - 10 - GENERAL FUND

CASH ACCT	CHECK NO	ISSUE DT	VENDOR	NAME	ORGANIZATION	ACCNT	----DESCRIPTION----	SALES TAX	AMOUNT
7101	299620	10/09/26	09221	IOWA DEPARTMENT OF	1000027401000000	0436	BUS INSPECTIONS	0.00	100.00
7101	299621	10/09/26	093361	IOWA VOCATIONAL REH	10	7105	26-TAP-08	0.00	57,910.06
7101	299622	10/09/26	09337	IOWA WESTERN COMMUN	1030612002153302	0323	PROF SERVICES	0.00	811.00
7101	299623	10/09/26	09162	ISI, LLC	1013321532183303	0323	INTERPRETER	0.00	3,469.00
7101	299624	10/09/26	090002	ISTATE TRUCK CENTER	1000027401000000	0673	PARTS	0.00	121.79
7101	299624	10/09/26	090002	ISTATE TRUCK CENTER	1000027401000000	0673	PARTS	0.00	141.60
7101	299624	10/09/26	090002	ISTATE TRUCK CENTER	1000027401000000	0673	PARTS	0.00	49.47
TOTAL CHECK								0.00	312.86
7101	299625	10/09/26	16157	J W PEPPER AND SON,	1021711001120000	0612	LACHEN UND WEINEN S	0.00	23.85
7101	299625	10/09/26	16157	J W PEPPER AND SON,	1021711001120000	0612	RIVERSONG ANDY BECK	0.00	25.00
7101	299625	10/09/26	16157	J W PEPPER AND SON,	1021711001120000	0612	FIRST WINTER SUITE	0.00	75.00
7101	299625	10/09/26	16157	J W PEPPER AND SON,	1021711001120000	0612	ELF JOHN DEBNEY BAN	0.00	70.00
7101	299625	10/09/26	16157	J W PEPPER AND SON,	1021711001120000	0612	FIREWORKS ON HOLIDA	0.00	65.00
7101	299625	10/09/26	16157	J W PEPPER AND SON,	1021111001120000	0612	SING ALLEUIA! VICTO	0.00	23.50
7101	299625	10/09/26	16157	J W PEPPER AND SON,	1021111001120000	0612	PIE JESU MARY LYNN	0.00	27.50
7101	299625	10/09/26	16157	J W PEPPER AND SON,	1021111001120000	0612	YO LE CANTO TODO EL	0.00	25.00
7101	299625	10/09/26	16157	J W PEPPER AND SON,	1021111001120000	0612	DOWN IN MY SOUL! VI	0.00	41.40
7101	299625	10/09/26	16157	J W PEPPER AND SON,	1021111001120000	0612	DOES THE WORLD SAY?	0.00	32.00
7101	299625	10/09/26	16157	J W PEPPER AND SON,	1021111001120000	0612	WILL THERE REALLY B	0.00	23.00
7101	299625	10/09/26	16157	J W PEPPER AND SON,	1021111001120000	0612	ESTIMATED SHIPPING/	0.00	19.99
TOTAL CHECK								0.00	451.24
7101	299626	10/09/26	111231	KIDDIE CRUSADERS	1084311004603117	0323	OCTOBER PREK	0.00	5,031.39
7101	299626	10/09/26	111231	KIDDIE CRUSADERS	1082311004603117	0323	OCTOBER PREK	0.00	4,257.33
7101	299626	10/09/26	111231	KIDDIE CRUSADERS	1082511004603117	0323	OCTOBER PREK	0.00	6,966.54
7101	299626	10/09/26	111231	KIDDIE CRUSADERS	1081811004603117	0323	OCTOBER PREK	0.00	6,579.51
TOTAL CHECK								0.00	22,834.77
7101	299627	10/09/26	11135	KIMBALL MIDWEST	1000027401000000	0670	SUPPLIES	0.00	1,049.91
7101	299628	10/09/26	56541	KINGSBURY ELECTRONI	1030211001120000	0612	BLIZZARD FLURRY Z	0.00	1,049.99
7101	299629	10/09/26	11173	KLEMMENSEN COMMERCI	1015526200000000	0682	PARTS	0.00	1,300.00
7101	299630	10/09/26	11187	KNOEPFLER CHEVROLET	1000026500000000	0434	MOTOR REPLACEMENT	0.00	8,247.72
7101	299630	10/09/26	11187	KNOEPFLER CHEVROLET	1000026500000000	0434	LABOR	0.00	4,273.50
7101	299630	10/09/26	11187	KNOEPFLER CHEVROLET	1000026500000000	0682	PARTS	0.00	66.42
7101	299630	10/09/26	11187	KNOEPFLER CHEVROLET	1000026500000000	0682	PARTS	0.00	117.62
TOTAL CHECK								0.00	12,705.26
7101	299631	10/09/26	12321	LESSMAN ELECTRIC SU	1021726200000000	0683	MAINTENANCE SUPPLIE	0.00	24.00
7101	299632	10/09/26	003695	LEUER'S LAMINATION	1015524100000000	0349	LAMINATION FILL	0.00	900.00
7101	299633	10/09/26	55550	LINDE GAS & EQUIPME	1030011003704531	0612	INSTRUCTIONAL SUPPL	0.00	245.00

SELECTION CRITERIA: transact.account<'8000' and transact.ck_date between '20261009' and '20261021'
ACCOUNTING PERIOD: 4/27

FUND - 10 - GENERAL FUND

CASH ACCT	CHECK NO	ISSUE DT	VENDOR	NAME	ORGANIZATION	ACCNT	----DESCRIPTION----	SALES TAX	AMOUNT
7101	299634	10/09/26	13059	MAIL HOUSE	1000025100000000	0531	POSTAGE	0.00	869.91
7101	299635	10/09/26	13142	MARY ELIZABETH DAY	1099011004603117	0323	OCTOBER PREK	0.00	1,548.12
7101	299636	10/09/26	20589	MARY TREGLIA COMMUN	1098111004603117	0323	OCTOBER PREK	0.00	3,096.24
7101	299638	10/09/26	13240	MCGRAW-HILL	1013312002113301	0612	CR LEVEL A TEACHER	0.00	383.29
7101	299638	10/09/26	13240	MCGRAW-HILL	1013312002143302	0612	CR LEVEL A TEACHER	0.00	383.29
7101	299638	10/09/26	13240	MCGRAW-HILL	1013312002113301	0642	CR LEVEL A WORKBOOK	0.00	78.10
7101	299638	10/09/26	13240	MCGRAW-HILL	1013312002143302	0642	CR LEVEL A WORKBOOK	0.00	78.10
7101	299638	10/09/26	13240	MCGRAW-HILL	1013312002113301	0641	CR LEVEL B1 STUDENT	0.00	41.85
7101	299638	10/09/26	13240	MCGRAW-HILL	1013312002143302	0641	CR LEVEL B1 STUDENT	0.00	41.85
7101	299638	10/09/26	13240	MCGRAW-HILL	1013312002113301	0642	CR LEVEL B1 WORKBOO	0.00	12.63
7101	299638	10/09/26	13240	MCGRAW-HILL	1013312002143302	0642	CR LEVEL B1 WORKBOO	0.00	12.63
7101	299638	10/09/26	13240	MCGRAW-HILL	1013312002113301	0612	CR LEVEL B1 TEACHER	0.00	130.84
7101	299638	10/09/26	13240	MCGRAW-HILL	1013312002143302	0612	CR LEVEL B1 TEACHER	0.00	130.84
7101	299638	10/09/26	13240	MCGRAW-HILL	1013312002113301	0641	CR LEVEL B1 STUDENT	0.00	104.62
7101	299638	10/09/26	13240	MCGRAW-HILL	1013312002143302	0641	CR LEVEL B1 STUDENT	0.00	104.63
7101	299638	10/09/26	13240	MCGRAW-HILL	1013312002143302	0642	CR LEVEL B1 WORKBOO	0.00	31.57
7101	299638	10/09/26	13240	MCGRAW-HILL	1013312002113301	0642	CR LEVEL B1 WORKBOO	0.00	31.58
7101	299638	10/09/26	13240	MCGRAW-HILL	1013312002113301	0612	ESTIMATED SHIPPING/	0.00	26.49
7101	299638	10/09/26	13240	MCGRAW-HILL	1013312002113301	0641	ESTIMATED SHIPPING/	0.00	26.49
7101	299638	10/09/26	13240	MCGRAW-HILL	1013312002113301	0642	ESTIMATED SHIPPING/	0.00	26.49
7101	299638	10/09/26	13240	MCGRAW-HILL	1013312002143302	0612	ESTIMATED SHIPPING/	0.00	26.49
7101	299638	10/09/26	13240	MCGRAW-HILL	1013312002143302	0641	ESTIMATED SHIPPING/	0.00	26.50
7101	299638	10/09/26	13240	MCGRAW-HILL	1013312002143302	0642	ESTIMATED SHIPPING/	0.00	26.50
7101	299638	10/09/26	13240	MCGRAW-HILL	1013412002143302	0612	ESTIMATED SHIPPING/	0.00	80.99
7101	299638	10/09/26	13240	MCGRAW-HILL	1013412002143302	0641	ESTIMATED SHIPPING/	0.00	81.00
7101	299638	10/09/26	13240	MCGRAW-HILL	1013412002143302	0642	ESTIMATED SHIPPING/	0.00	81.00
7101	299638	10/09/26	13240	MCGRAW-HILL	1013412002113301	0612	ESTIMATED SHIPPING/	0.00	18.61
7101	299638	10/09/26	13240	MCGRAW-HILL	1013412002113301	0641	ESTIMATED SHIPPING/	0.00	18.61
7101	299638	10/09/26	13240	MCGRAW-HILL	1013412002113301	0642	ESTIMATED SHIPPING/	0.00	18.62
7101	299638	10/09/26	13240	MCGRAW-HILL	1013412002143302	0612	ESTIMATED SHIPPING/	0.00	18.62
7101	299638	10/09/26	13240	MCGRAW-HILL	1013412002143302	0641	ESTIMATED SHIPPING/	0.00	18.62
7101	299638	10/09/26	13240	MCGRAW-HILL	1013412002143302	0642	ESTIMATED SHIPPING/	0.00	18.62
7101	299638	10/09/26	13240	MCGRAW-HILL	1015912002113301	0612	CR LEVEL A TEACHER	0.00	383.29
7101	299638	10/09/26	13240	MCGRAW-HILL	1015912002143302	0612	CR LEVEL A TEACHER	0.00	383.29
7101	299638	10/09/26	13240	MCGRAW-HILL	1015912002113301	0642	CR LEVEL A WORKBOOK	0.00	42.60
7101	299638	10/09/26	13240	MCGRAW-HILL	1015912002143302	0642	CR LEVEL A WORKBOOK	0.00	42.60
7101	299638	10/09/26	13240	MCGRAW-HILL	1015912002113301	0612	CR LEVEL B1 TEACHER	0.00	392.52
7101	299638	10/09/26	13240	MCGRAW-HILL	1015912002143302	0612	CR LEVEL B1 TEACHER	0.00	392.52
7101	299638	10/09/26	13240	MCGRAW-HILL	1015912002143302	0641	CR LEVEL B1 STUDENT	0.00	272.02
7101	299638	10/09/26	13240	MCGRAW-HILL	1015912002113301	0641	CR LEVEL B1 STUDENT	0.00	272.03
7101	299638	10/09/26	13240	MCGRAW-HILL	1015912002143302	0642	CR LEVEL B1 WORKBOO	0.00	82.09
7101	299638	10/09/26	13240	MCGRAW-HILL	1015912002113301	0642	CR LEVEL B1 WORKBOO	0.00	82.10
7101	299638	10/09/26	13240	MCGRAW-HILL	1015912002113301	0612	CR LEVEL B2 TEACHER	0.00	392.52
7101	299638	10/09/26	13240	MCGRAW-HILL	1015912002143302	0612	CR LEVEL B2 TEACHER	0.00	392.52
7101	299638	10/09/26	13240	MCGRAW-HILL	1015912002113301	0612	ESTIMATED SHIPPING/	0.00	52.79
7101	299638	10/09/26	13240	MCGRAW-HILL	1015912002113301	0641	ESTIMATED SHIPPING/	0.00	52.79
7101	299638	10/09/26	13240	MCGRAW-HILL	1015912002113301	0642	ESTIMATED SHIPPING/	0.00	52.79

SELECTION CRITERIA: transact.account<'8000' and transact.ck_date between '20261009' and '20261021'
ACCOUNTING PERIOD: 4/27

FUND - 10 - GENERAL FUND

CASH ACCT	CHECK NO	ISSUE DT	VENDOR	NAME	ORGANIZATION	ACCNT	----DESCRIPTION----	SALES TAX	AMOUNT
7101	299638	10/09/26	13240	MCGRAW-HILL	1015912002143302	0612	ESTIMATED SHIPPING/	0.00	52.79
7101	299638	10/09/26	13240	MCGRAW-HILL	1015912002143302	0641	ESTIMATED SHIPPING/	0.00	52.79
7101	299638	10/09/26	13240	MCGRAW-HILL	1015912002143302	0642	ESTIMATED SHIPPING/	0.00	52.80
7101	299638	10/09/26	13240	MCGRAW-HILL	1015712002143302	0642	EW WORKBOOKS	0.00	63.97
7101	299638	10/09/26	13240	MCGRAW-HILL	1015712002113301	0642	EW WORKBOOKS	0.00	63.98
7101	299638	10/09/26	13240	MCGRAW-HILL	1015712002113301	0612	EW TEACHER MATERIAL	0.00	117.75
7101	299638	10/09/26	13240	MCGRAW-HILL	1015712002143302	0612	EW TEACHER MATERIAL	0.00	117.75
7101	299638	10/09/26	13240	MCGRAW-HILL	1015712002113301	0642	CMC WORKBOOK A 1	0.00	60.36
7101	299638	10/09/26	13240	MCGRAW-HILL	1015712002143302	0642	CMC WORKBOOK A 1	0.00	60.36
7101	299638	10/09/26	13240	MCGRAW-HILL	1015712002113301	0642	CMC WORKBOOK B 1	0.00	60.36
7101	299638	10/09/26	13240	MCGRAW-HILL	1015712002143302	0642	CMC WORKBOOK B 1	0.00	60.36
7101	299638	10/09/26	13240	MCGRAW-HILL	1015712002113301	0642	CMC ASSESSMENT BOOK	0.00	40.08
7101	299638	10/09/26	13240	MCGRAW-HILL	1015712002143302	0642	CMC ASSESSMENT BOOK	0.00	40.08
7101	299638	10/09/26	13240	MCGRAW-HILL	1015712002113301	0641	CMC TEXTBOOKS LEVEL	0.00	219.96
7101	299638	10/09/26	13240	MCGRAW-HILL	1015712002143302	0641	CMC TEXTBOOKS LEVEL	0.00	219.96
7101	299638	10/09/26	13240	MCGRAW-HILL	1015712002143302	0642	CMC WORKBOOK C 1	0.00	37.72
7101	299638	10/09/26	13240	MCGRAW-HILL	1015712002113301	0642	CMC WORKBOOK C 1	0.00	37.73
7101	299638	10/09/26	13240	MCGRAW-HILL	1015712002113301	0642	CMC ASSESSMENT BOOK	0.00	55.11
7101	299638	10/09/26	13240	MCGRAW-HILL	1015712002143302	0642	CMC ASSESSMENT BOOK	0.00	55.11
7101	299638	10/09/26	13240	MCGRAW-HILL	1015712002113301	0612	CMC TEACHER MATERIA	0.00	925.29
7101	299638	10/09/26	13240	MCGRAW-HILL	1015712002143302	0612	CMC TEACHER MATERIA	0.00	925.29
7101	299638	10/09/26	13240	MCGRAW-HILL	1015712002113301	0612	CMC TEACHER MATERIA	0.00	925.29
7101	299638	10/09/26	13240	MCGRAW-HILL	1015712002143302	0612	CMC TEACHER MATERIA	0.00	925.29
7101	299638	10/09/26	13240	MCGRAW-HILL	1015712002113301	0612	CMC TEACHER MATERIA	0.00	616.86
7101	299638	10/09/26	13240	MCGRAW-HILL	1015712002143302	0612	CMC TEACHER MATERIA	0.00	616.86
7101	299638	10/09/26	13240	MCGRAW-HILL	1015712002113301	0612	CR LEVEL A TEACHER	0.00	383.29
7101	299638	10/09/26	13240	MCGRAW-HILL	1015712002143302	0612	CR LEVEL A TEACHER	0.00	383.29
7101	299638	10/09/26	13240	MCGRAW-HILL	1015712002113301	0642	CR LEVEL A WORKBOOK	0.00	42.60
7101	299638	10/09/26	13240	MCGRAW-HILL	1015712002143302	0642	CR LEVEL A WORKBOOK	0.00	42.60
7101	299638	10/09/26	13240	MCGRAW-HILL	1015712002113301	0612	CR LEVEL B1 TEACHER	0.00	392.52
7101	299638	10/09/26	13240	MCGRAW-HILL	1015712002143302	0612	CR LEVEL B1 TEACHER	0.00	392.52
7101	299638	10/09/26	13240	MCGRAW-HILL	1015712002143302	0641	CR STUDENT BOOKS LE	0.00	188.32
7101	299638	10/09/26	13240	MCGRAW-HILL	1015712002113301	0641	CR STUDENT BOOKS LE	0.00	188.33
7101	299638	10/09/26	13240	MCGRAW-HILL	1015712002143302	0642	CR WORKBOOKS LEVEL	0.00	56.83
7101	299638	10/09/26	13240	MCGRAW-HILL	1015712002113301	0642	CR WORKBOOKS LEVEL	0.00	56.84
7101	299638	10/09/26	13240	MCGRAW-HILL	1015712002113301	0612	CR TEACHER MATERIAL	0.00	261.68
7101	299638	10/09/26	13240	MCGRAW-HILL	1015712002143302	0612	CR TEACHER MATERIAL	0.00	261.68
7101	299638	10/09/26	13240	MCGRAW-HILL	1015712002143302	0642	RMT GRADE K LEVEL A	0.00	8.83
7101	299638	10/09/26	13240	MCGRAW-HILL	1015712002113301	0642	RMT GRADE K LEVEL A	0.00	8.84
7101	299638	10/09/26	13240	MCGRAW-HILL	1015712002113301	0652	RMT TEACHER SUBSCRI	0.00	162.24
7101	299638	10/09/26	13240	MCGRAW-HILL	1015712002143302	0652	RMT TEACHER SUBSCRI	0.00	162.24
7101	299638	10/09/26	13240	MCGRAW-HILL	1015712002113301	0612	RMT GRADE K TEACHER	0.00	415.80
7101	299638	10/09/26	13240	MCGRAW-HILL	1015712002143302	0612	RMT GRADE K TEACHER	0.00	415.80
7101	299638	10/09/26	13240	MCGRAW-HILL	1015712002113301	0612	RMT GRADE K ELA TEA	0.00	831.60
7101	299638	10/09/26	13240	MCGRAW-HILL	1015712002143302	0612	RMT GRADE K ELA TEA	0.00	831.60
7101	299638	10/09/26	13240	MCGRAW-HILL	1015712002113301	0612	ESTIMATED SHIPPING/	0.00	76.08
7101	299638	10/09/26	13240	MCGRAW-HILL	1015712002113301	0641	ESTIMATED SHIPPING/	0.00	76.09
7101	299638	10/09/26	13240	MCGRAW-HILL	1015712002113301	0642	ESTIMATED SHIPPING/	0.00	76.09
7101	299638	10/09/26	13240	MCGRAW-HILL	1015712002143302	0612	ESTIMATED SHIPPING/	0.00	76.09
7101	299638	10/09/26	13240	MCGRAW-HILL	1015712002143302	0641	ESTIMATED SHIPPING/	0.00	76.09
7101	299638	10/09/26	13240	MCGRAW-HILL	1015712002143302	0642	ESTIMATED SHIPPING/	0.00	76.09

SELECTION CRITERIA: transact.account<'8000' and transact.ck_date between '20261009' and '20261021'
ACCOUNTING PERIOD: 4/27

FUND - 10 - GENERAL FUND

CASH ACCT	CHECK NO	ISSUE DT	VENDOR	NAME	ORGANIZATION	ACCNT	----DESCRIPTION----	SALES TAX	AMOUNT
7101	299638	10/09/26	13240	MCGRAW-HILL	1015712002113301	0612	ESTIMATED SHIPPING/	0.00	59.71
7101	299638	10/09/26	13240	MCGRAW-HILL	1015712002113301	0641	ESTIMATED SHIPPING/	0.00	59.71
7101	299638	10/09/26	13240	MCGRAW-HILL	1015712002113301	0642	ESTIMATED SHIPPING/	0.00	59.71
7101	299638	10/09/26	13240	MCGRAW-HILL	1015712002143302	0612	ESTIMATED SHIPPING/	0.00	59.71
7101	299638	10/09/26	13240	MCGRAW-HILL	1015712002143302	0641	ESTIMATED SHIPPING/	0.00	59.72
7101	299638	10/09/26	13240	MCGRAW-HILL	1015712002143302	0642	ESTIMATED SHIPPING/	0.00	59.72
7101	299638	10/09/26	13240	MCGRAW-HILL	1013412002113301	0642	EW LEVEL 1 WORKBOOK	0.00	255.90
7101	299638	10/09/26	13240	MCGRAW-HILL	1013412002143302	0642	EW LEVEL 1 WORKBOOK	0.00	255.90
7101	299638	10/09/26	13240	MCGRAW-HILL	1013412002113301	0612	EW TEACHER MATERIAL	0.00	117.75
7101	299638	10/09/26	13240	MCGRAW-HILL	1013412002143302	0612	EW TEACHER MATERIAL	0.00	117.75
7101	299638	10/09/26	13240	MCGRAW-HILL	1013412002113301	0642	CMC WORKBOOK LEVEL	0.00	15.09
7101	299638	10/09/26	13240	MCGRAW-HILL	1013412002143302	0642	CMC WORKBOOK LEVEL	0.00	15.09
7101	299638	10/09/26	13240	MCGRAW-HILL	1013412002113301	0642	CMC WORKBOOK 2 LEVE	0.00	15.09
7101	299638	10/09/26	13240	MCGRAW-HILL	1013412002143302	0642	CMC WORKBOOK 2 LEVE	0.00	15.09
7101	299638	10/09/26	13240	MCGRAW-HILL	1013412002113301	0642	CMC LEVEL A ASSESSM	0.00	10.02
7101	299638	10/09/26	13240	MCGRAW-HILL	1013412002143302	0642	CMC LEVEL A ASSESSM	0.00	10.02
7101	299638	10/09/26	13240	MCGRAW-HILL	1013412002143302	0642	CMC LEVEL B WORKBOO	0.00	128.26
7101	299638	10/09/26	13240	MCGRAW-HILL	1013412002113301	0642	CMC LEVEL B WORKBOO	0.00	128.27
7101	299638	10/09/26	13240	MCGRAW-HILL	1013412002143302	0642	CMC WORKBOOK 2 LEVE	0.00	128.26
7101	299638	10/09/26	13240	MCGRAW-HILL	1013412002113301	0642	CMC WORKBOOK 2 LEVE	0.00	128.27
7101	299638	10/09/26	13240	MCGRAW-HILL	1013412002113301	0642	CMC LEVEL B ASSESSM	0.00	85.17
7101	299638	10/09/26	13240	MCGRAW-HILL	1013412002143302	0642	CMC LEVEL B ASSESSM	0.00	85.17
7101	299638	10/09/26	13240	MCGRAW-HILL	1013412002113301	0642	CMC LEVEL C WORKBOO	0.00	75.45
7101	299638	10/09/26	13240	MCGRAW-HILL	1013412002143302	0642	CMC LEVEL C WORKBOO	0.00	75.45
7101	299638	10/09/26	13240	MCGRAW-HILL	1013412002113301	0642	CMC WORKBOOK 2 LEVE	0.00	75.45
7101	299638	10/09/26	13240	MCGRAW-HILL	1013412002143302	0642	CMC WORKBOOK 2 LEVE	0.00	75.45
7101	299638	10/09/26	13240	MCGRAW-HILL	1013412002113301	0642	CMC LEVEL C ASSESSM	0.00	50.10
7101	299638	10/09/26	13240	MCGRAW-HILL	1013412002143302	0642	CMC LEVEL C ASSESSM	0.00	50.10
7101	299638	10/09/26	13240	MCGRAW-HILL	1013412002113301	0652	CMC TEACHER LICENSE	0.00	34.83
7101	299638	10/09/26	13240	MCGRAW-HILL	1013412002143302	0652	CMC TEACHER LICENSE	0.00	34.83
7101	299638	10/09/26	13240	MCGRAW-HILL	1013412002143302	0612	CR TEACHER MATERIAL	0.00	574.93
7101	299638	10/09/26	13240	MCGRAW-HILL	1013412002113301	0612	CR TEACHER MATERIAL	0.00	574.94
7101	299638	10/09/26	13240	MCGRAW-HILL	1013412002113301	0642	CR LEVEL A WORKBOOK	0.00	63.90
7101	299638	10/09/26	13240	MCGRAW-HILL	1013412002143302	0642	CR LEVEL A WORKBOOK	0.00	63.90
7101	299638	10/09/26	13240	MCGRAW-HILL	1013412002113301	0652	CR TEACHER LICENSE	0.00	13.23
7101	299638	10/09/26	13240	MCGRAW-HILL	1013412002143302	0652	CR TEACHER LICENSE	0.00	13.23
7101	299638	10/09/26	13240	MCGRAW-HILL	1013412002113301	0641	CR LEVEL B1 STUDENT	0.00	251.10
7101	299638	10/09/26	13240	MCGRAW-HILL	1013412002143302	0641	CR LEVEL B1 STUDENT	0.00	251.10
7101	299638	10/09/26	13240	MCGRAW-HILL	1013412002113301	0642	CR WORKBOOKS LEVEL	0.00	75.78
7101	299638	10/09/26	13240	MCGRAW-HILL	1013412002143302	0642	CR WORKBOOKS LEVEL	0.00	75.78
7101	299638	10/09/26	13240	MCGRAW-HILL	1013412002113301	0612	CR LEVEL B1 TEACHER	0.00	392.52
7101	299638	10/09/26	13240	MCGRAW-HILL	1013412002143302	0612	CR LEVEL B1 TEACHER	0.00	392.52
7101	299638	10/09/26	13240	MCGRAW-HILL	1013412002113301	0612	CR LEVEL B2 TEACHER	0.00	392.52
7101	299638	10/09/26	13240	MCGRAW-HILL	1013412002143302	0612	CR LEVEL B2 TEACHER	0.00	392.52
7101	299638	10/09/26	13240	MCGRAW-HILL	1013412002143302	0642	RMT WORKBOOK B GRAD	0.00	61.84
7101	299638	10/09/26	13240	MCGRAW-HILL	1013412002113301	0642	RMT WORKBOOK B GRAD	0.00	61.85
7101	299638	10/09/26	13240	MCGRAW-HILL	1013412002113301	0612	RMT GRADE 1 LANGUAG	0.00	554.40
7101	299638	10/09/26	13240	MCGRAW-HILL	1013412002143302	0612	RMT GRADE 1 LANGUAG	0.00	554.40
7101	299638	10/09/26	13240	MCGRAW-HILL	1013412002113301	0652	RMT ELA GRADE 1 TEA	0.00	162.24
7101	299638	10/09/26	13240	MCGRAW-HILL	1013412002143302	0652	RMT ELA GRADE 1 TEA	0.00	162.24
7101	299638	10/09/26	13240	MCGRAW-HILL	1013412002113301	0612	ESTIMATED SHIPPING/	0.00	80.99

SELECTION CRITERIA: transact.account<'8000' and transact.ck_date between '20261009' and '20261021'
ACCOUNTING PERIOD: 4/27

FUND - 10 - GENERAL FUND

CASH ACCT	CHECK NO	ISSUE DT	VENDOR	NAME	ORGANIZATION	ACCNT	----DESCRIPTION----	SALES TAX	AMOUNT
7101	299638	10/09/26	13240	MCGRAW-HILL	1013412002113301	0641	ESTIMATED SHIPPING/	0.00	80.99
7101	299638	10/09/26	13240	MCGRAW-HILL	1013412002113301	0642	ESTIMATED SHIPPING/	0.00	80.99
TOTAL CHECK								0.00	25,384.77
7101	299639	10/09/26	13328	MEIER TOWING	1000026500000000	0434	SERVICE	0.00	85.00
7101	299640	10/09/26	13465	MIDAMERICAN ENERGY	1021726200000000	0622	AUGUST ELECTRIC	0.00	16,178.10
7101	299640	10/09/26	13465	MIDAMERICAN ENERGY	1022026200000000	0622	AUGUST ELECTRIC	0.00	19,198.82
7101	299640	10/09/26	13465	MIDAMERICAN ENERGY	1030626200000000	0622	AUGUST ELECTRIC	0.00	20,591.25
7101	299640	10/09/26	13465	MIDAMERICAN ENERGY	1030526200000000	0622	AUGUST ELECTRIC	0.00	23,934.55
7101	299640	10/09/26	13465	MIDAMERICAN ENERGY	1030626200000000	0622	AUGUST ELECTRIC	0.00	15.99
7101	299640	10/09/26	13465	MIDAMERICAN ENERGY	1030626200000000	0622	AUGUST ELECTRIC	0.00	10.87
7101	299640	10/09/26	13465	MIDAMERICAN ENERGY	1030526200000000	0622	AUGUST ELECTRIC	0.00	23.54
7101	299640	10/09/26	13465	MIDAMERICAN ENERGY	1014926200000000	0622	AUGUST ELECTRIC	0.00	33.82
7101	299640	10/09/26	13465	MIDAMERICAN ENERGY	1030526200000000	0622	AUGUST ELECTRIC	0.00	62.50
7101	299640	10/09/26	13465	MIDAMERICAN ENERGY	1030626200000000	0622	AUGUST ELECTRIC	0.00	120.35
7101	299640	10/09/26	13465	MIDAMERICAN ENERGY	1014126200000000	0622	AUGUST ELECTRIC	0.00	3,530.13
7101	299640	10/09/26	13465	MIDAMERICAN ENERGY	1015726200000000	0622	AUGUST ELECTRIC	0.00	5,455.20
7101	299640	10/09/26	13465	MIDAMERICAN ENERGY	1013326200000000	0622	AUGUST ELECTRIC	0.00	5,860.59
7101	299640	10/09/26	13465	MIDAMERICAN ENERGY	1015526200000000	0622	AUGUST ELECTRIC	0.00	8,312.46
TOTAL CHECK								0.00	103,328.17
7101	299641	10/09/26	13429	RAY'S MIDBELL MUSIC	1015811001129262	0612	PERCUSSION KIT SBK-	0.00	1,586.44
7101	299641	10/09/26	13429	RAY'S MIDBELL MUSIC	1015811001129262	0612	FLUTE TREVOR JAMES	0.00	503.68
7101	299641	10/09/26	13429	RAY'S MIDBELL MUSIC	1015811001129262	0612	CLARINET YAMAHA YCL	0.00	6,985.30
7101	299641	10/09/26	13429	RAY'S MIDBELL MUSIC	1015811001129262	0612	TROMBONE YAMAHA YSL	0.00	11,424.00
7101	299641	10/09/26	13429	RAY'S MIDBELL MUSIC	1015811001129262	0612	EUPHONIUM YAMAHA YE	0.00	4,500.58
TOTAL CHECK								0.00	25,000.00
7101	299642	10/09/26	134521	MIDWEST ALARM COMPA	1015726600000000	0682	PARTS	0.00	795.60
7101	299642	10/09/26	134521	MIDWEST ALARM COMPA	1000026600000000	0682	PARTS	0.00	795.60
TOTAL CHECK								0.00	1,591.20
7101	299643	10/09/26	13475	MIDWEST WHEEL	1000026500000000	0682	PARTS	0.00	351.79
7101	299643	10/09/26	13475	MIDWEST WHEEL	1000026500000000	0682	PARTS	0.00	281.06
7101	299643	10/09/26	13475	MIDWEST WHEEL	1000027401000000	0670	SUPPLIES	0.00	86.37
7101	299643	10/09/26	13475	MIDWEST WHEEL	1000026500000000	0682	PARTS	0.00	134.26
TOTAL CHECK								0.00	853.48
7101	299644	10/09/26	56628	MOOVE NA DIST. LLC/	1000027401000000	0671	LUBES	0.00	1,045.00
7101	299645	10/09/26	136851	MPS	1022011001051114	0641	ESTIMATED SHIPPING/	0.00	55.28
7101	299645	10/09/26	136851	MPS	1022011001051114	0641	ESTIMATED SHIPPING/	0.00	11.74
7101	299645	10/09/26	136851	MPS	1022011001051114	0641	FOUNDATIONS OF LANG	0.00	2,759.52
7101	299645	10/09/26	136851	MPS	1022011001051114	0641	FOUNDATIONS OF LANG	0.00	689.88
7101	299645	10/09/26	136851	MPS	1021111001051114	0641	TEXTBOOKS	0.00	233.87
7101	299645	10/09/26	136851	MPS	1021711001051114	0641	TEXTBOOKS	0.00	233.87
7101	299645	10/09/26	136851	MPS	1022011001051114	0641	TEXTBOOKS	0.00	233.88
TOTAL CHECK								0.00	4,218.04
7101	299646	10/09/26	14003	NAACP	1000023210000000	0811	ADMIN FEES	0.00	700.00

SELECTION CRITERIA: transact.account<'8000' and transact.ck_date between '20261009' and '20261021'
ACCOUNTING PERIOD: 4/27

FUND - 10 - GENERAL FUND

CASH ACCT	CHECK NO	ISSUE DT	VENDOR	NAME	ORGANIZATION	ACCNT	----DESCRIPTION----	SALES TAX	AMOUNT
7101	299647	10/09/26	55462	CESAR NARVAEZ	1000021900000000	0349	INTERPRETER	0.00	300.00
7101	299648	10/09/26	141381	NATIONAL RESTAURANT	1030011003504531	0323	PROSTART LEVEL 1 EX	0.00	3,465.00
7101	299649	10/09/26	15015	O'REILLY AUTO PARTS	1000027401000000	0670	SUPPLIES	0.00	15.99
7101	299649	10/09/26	15015	O'REILLY AUTO PARTS	1000027401000000	0670	SUPPLIES	0.00	17.99
7101	299649	10/09/26	15015	O'REILLY AUTO PARTS	1000027401000000	0670	SUPPLIES	0.00	20.79
7101	299649	10/09/26	15015	O'REILLY AUTO PARTS	1000026500000000	0682	PARTS	0.00	12.52
7101	299649	10/09/26	15015	O'REILLY AUTO PARTS	1000026200000000	0683	MAINTENANCE SUPPLIE	0.00	34.99
7101	299649	10/09/26	15015	O'REILLY AUTO PARTS	1000026500000000	0683	MAINTENANCE SUPPLY	0.00	33.98
7101	299649	10/09/26	15015	O'REILLY AUTO PARTS	1000026500000000	0682	PARTS	0.00	31.95
7101	299649	10/09/26	15015	O'REILLY AUTO PARTS	1000026500000000	0682	PARTS	0.00	25.32
7101	299649	10/09/26	15015	O'REILLY AUTO PARTS	1000026500000000	0682	PARTS	0.00	27.98
7101	299649	10/09/26	15015	O'REILLY AUTO PARTS	1000027401000000	0670	SUPPLIES	0.00	33.28
7101	299649	10/09/26	15015	O'REILLY AUTO PARTS	1000026500000000	0682	PARTS	0.00	1,010.48
7101	299649	10/09/26	15015	O'REILLY AUTO PARTS	1000026500000000	0682	PARTS	0.00	10.45
7101	299649	10/09/26	15015	O'REILLY AUTO PARTS	1000026500000000	0682	PARTS	0.00	96.84
TOTAL CHECK								0.00	1,372.56
7101	299650	10/09/26	16204	PFLANZ ELECTRONICS	1000025860008877	0734	TECH RELATED SOFTWA	0.00	299.90
7101	299651	10/09/26	16229	PHONAK	1013312002183303	0612	ROGER TOUCHSCREEN M	0.00	1,916.67
7101	299651	10/09/26	16229	PHONAK	1013312002183303	0612	UNIVERSAL POWER SUP	0.00	5.40
7101	299651	10/09/26	16229	PHONAK	1013312002183303	0612	ESTIMATED SHIPPING/	0.00	19.99
TOTAL CHECK								0.00	1,942.06
7101	299652	10/09/26	58158	PORTAGE PARTNERS CO	1000023110000000	0349	PROF SERVICES	0.00	2,800.00
7101	299653	10/09/26	18092	RECORD PRINTING & C	1013312002173303	0612	INSTRUCTIONAL SUPPL	0.00	646.00
7101	299653	10/09/26	18092	RECORD PRINTING & C	1013412002173303	0612	INSTRUCTIONAL SUPPL	0.00	646.00
7101	299653	10/09/26	18092	RECORD PRINTING & C	1014924100000000	0618	OTHER GEN SUPPLIES	0.00	286.00
TOTAL CHECK								0.00	1,578.00
7101	299654	10/09/26	55181	ROYAL IRON	1014926200000000	0682	PARTS	0.00	840.00
7101	299655	10/09/26	56941	SAPP BROS, INC	1000027201000000	0626	REG ED BUS	0.00	642.52
7101	299655	10/09/26	56941	SAPP BROS, INC	1030527209100000	0626	NORTH VEHICLES	0.00	279.76
7101	299655	10/09/26	56941	SAPP BROS, INC	1030627209100000	0626	WEST VEHICLES	0.00	336.43
7101	299655	10/09/26	56941	SAPP BROS, INC	1007126500000000	0626	FOOD SVC GAS	0.00	452.37
7101	299655	10/09/26	56941	SAPP BROS, INC	1030227209100000	0626	EAST VEHICLES	0.00	94.35
7101	299655	10/09/26	56941	SAPP BROS, INC	1030227201210000	0626	EAST DRIVERS ED	0.00	10.11
7101	299655	10/09/26	56941	SAPP BROS, INC	1030527201210000	0626	NORTH DRIVERS ED	0.00	10.12
7101	299655	10/09/26	56941	SAPP BROS, INC	1030627201210000	0626	WEST DRIVERS ED	0.00	10.12
7101	299655	10/09/26	56941	SAPP BROS, INC	1000027201000000	0626	SPED ED GAS	0.00	1,214.46
7101	299655	10/09/26	56941	SAPP BROS, INC	1000026500000000	0626	ONM GAS MISC	0.00	1,909.30
TOTAL CHECK								0.00	4,959.54
7101	299656	10/09/26	19175	SCHOOL HEALTH CORPO	1000021340000000	0618	90650 DISPOSABLE PE	0.00	15.78
7101	299656	10/09/26	19175	SCHOOL HEALTH CORPO	1000021340000000	0618	10330643 CUPS 3.5 O	0.00	479.95
7101	299656	10/09/26	19175	SCHOOL HEALTH CORPO	1000021340000000	0618	28177 SURGICAL TAPE	0.00	25.98

SELECTION CRITERIA: transact.account<'8000' and transact.ck_date between '20261009' and '20261021'
ACCOUNTING PERIOD: 4/27

FUND - 10 - GENERAL FUND

CASH ACCT	CHECK NO	ISSUE DT	VENDOR	NAME	ORGANIZATION	ACCNT	----DESCRIPTION----	SALES TAX	AMOUNT
7101	299656	10/09/26	19175	SCHOOL HEALTH CORPO	1000021340000000	0618	28683 ATHLETIC TAPE	0.00	73.99
TOTAL CHECK								0.00	595.70
7101	299657	10/09/26	12138	SCHOOL SPECIALTY	1015611001020000	0612	INSTRUCTIONAL SUPPL	0.00	1,183.27
7101	299658	10/09/26	19364	SIGNS BY TOMORROW	1000027401000000	0434	SERVICE	0.00	130.00
7101	299659	10/09/26	56741	SIOUX CITY SHADE CO	1030226200000000	0682	PARTS	0.00	318.63
7101	299659	10/09/26	56741	SIOUX CITY SHADE CO	1030526200000000	0682	PARTS	0.00	739.11
TOTAL CHECK								0.00	1,057.74
7101	299660	10/09/26	55468	SIOUX CITY TRUCK SA	1000027401000000	0673	PARTS	0.00	911.74
7101	299660	10/09/26	55468	SIOUX CITY TRUCK SA	1000027401000000	0673	PARTS	0.00	395.90
7101	299660	10/09/26	55468	SIOUX CITY TRUCK SA	1000027401000000	0673	PARTS REFUND	0.00	-760.87
7101	299660	10/09/26	55468	SIOUX CITY TRUCK SA	1000027401000000	0673	PARTS	0.00	6.84
TOTAL CHECK								0.00	553.61
7101	299661	10/09/26	19468	SIOUX CITY WINNELSO	1030626200000000	0682	PARTS	0.00	9.80
7101	299661	10/09/26	19468	SIOUX CITY WINNELSO	1030626200000000	0682	PARTS	0.00	154.86
7101	299661	10/09/26	19468	SIOUX CITY WINNELSO	1021126200000000	0682	PARTS	0.00	95.87
7101	299661	10/09/26	19468	SIOUX CITY WINNELSO	1000026200000000	0682	PARTS	0.00	93.48
7101	299661	10/09/26	19468	SIOUX CITY WINNELSO	1021126200000000	0682	PARTS	0.00	99.63
7101	299661	10/09/26	19468	SIOUX CITY WINNELSO	1000026200000000	0682	PARTS	0.00	82.02
7101	299661	10/09/26	19468	SIOUX CITY WINNELSO	1012426200000000	0682	PARTS	0.00	89.02
7101	299661	10/09/26	19468	SIOUX CITY WINNELSO	1000026200000000	0682	PARTS	0.00	26.38
7101	299661	10/09/26	19468	SIOUX CITY WINNELSO	1000026200000000	0682	PARTS	0.00	32.30
7101	299661	10/09/26	19468	SIOUX CITY WINNELSO	1000026200000000	0682	PARTS	0.00	37.48
7101	299661	10/09/26	19468	SIOUX CITY WINNELSO	1015826200000000	0682	PARTS	0.00	34.74
7101	299661	10/09/26	19468	SIOUX CITY WINNELSO	1000026200000000	0682	PARTS	0.00	40.24
7101	299661	10/09/26	19468	SIOUX CITY WINNELSO	1014526200000000	0683	MAINTENANCE SUPPLIE	0.00	45.29
7101	299661	10/09/26	19468	SIOUX CITY WINNELSO	1015626200000000	0683	MAINTENANCE SUPPLIE	0.00	15.41
7101	299661	10/09/26	19468	SIOUX CITY WINNELSO	1000026200000000	0683	MAINTENANCE SUPPLIE	0.00	15.41
7101	299661	10/09/26	19468	SIOUX CITY WINNELSO	1000026200000000	0682	PARTS	0.00	21.64
7101	299661	10/09/26	19468	SIOUX CITY WINNELSO	1012426200000000	0682	PARTS	0.00	48.87
7101	299661	10/09/26	19468	SIOUX CITY WINNELSO	1021726200000000	0682	PARTS	0.00	51.21
7101	299661	10/09/26	19468	SIOUX CITY WINNELSO	1000026200000000	0683	MAINTENANCE SUPPLIE	0.00	59.16
TOTAL CHECK								0.00	1,052.81
7101	299662	10/09/26	19520	SIOUXLAND COMMUNITY	1022021329200000	0347	MIDDLE SCHOOL PHYSI	0.00	2,400.00
7101	299662	10/09/26	19520	SIOUXLAND COMMUNITY	1021121329200000	0347	MIDDLE SCHOOL PHYSI	0.00	2,720.00
7101	299662	10/09/26	19520	SIOUXLAND COMMUNITY	1021721329200000	0347	MIDDLE SCHOOL PHYSI	0.00	4,820.00
TOTAL CHECK								0.00	9,940.00
7101	299663	10/09/26	084441	STAN HOUSTON-SIOUX	1014126200000000	0683	MAINTENANCE SUPPLIE	0.00	24.91
7101	299663	10/09/26	084441	STAN HOUSTON-SIOUX	1000026200000000	0683	MAINTENANCE SUPPLIE	0.00	25.92
7101	299663	10/09/26	084441	STAN HOUSTON-SIOUX	1030011003154531	0612	INSTRUCTIONAL SUPPL	0.00	1,872.80
7101	299663	10/09/26	084441	STAN HOUSTON-SIOUX	1000026200000000	0683	MAINTENANCE SUPPLIE	0.00	71.49
7101	299663	10/09/26	084441	STAN HOUSTON-SIOUX	1000027401000000	0670	SUPPLIES	0.00	199.00
TOTAL CHECK								0.00	2,194.12
7101	299664	10/09/26	19780	STATE STEEL SUPPLY	1030626300000000	0682	PARTS	0.00	895.00

SELECTION CRITERIA: transact.account<'8000' and transact.ck_date between '20261009' and '20261021'
ACCOUNTING PERIOD: 4/27

FUND - 10 - GENERAL FUND

CASH ACCT	CHECK NO	ISSUE DT	VENDOR	NAME	ORGANIZATION	ACCNT	----DESCRIPTION----	SALES TAX	AMOUNT
7101	299665	10/09/26	19868	STORY TIME PRESCHOO	1082711004603117	0323	OCTOBER PREK	0.00	4,644.36
7101	299666	10/09/26	57659	SUBJECT TECHNOLOGIE	1030211004201119	0750	HIGH SCHOOL CREDIT	0.00	100,000.00
7101	299667	10/09/26	19937	C W SUTER SERVICES	1000026200000000	0682	PARTS	0.00	392.14
7101	299668	10/09/26	57535	THE LAMAR COMPANIES	1000025720000000	0540	ADVERTISING	0.00	2,100.00
7101	299669	10/09/26	20295	THOMPSON	1030626200000000	0432	SERVICE	0.00	750.00
7101	299670	10/09/26	53985	TRANSPERFECT TRANSL	1000025720000000	0349	LANGUAGE ASSESSMENT	0.00	305.00
7101	299671	10/09/26	20663	TRI TECH SALES	1015826200000000	0682	PARTS	0.00	591.28
7101	299671	10/09/26	20663	TRI TECH SALES	1015726200000000	0682	27000344 FREIGHT	0.00	256.44
7101	299671	10/09/26	20663	TRI TECH SALES	1015726200000000	0682	27000345 FREIGHT	0.00	76.47
7101	299671	10/09/26	20663	TRI TECH SALES	1015726200000000	0682	GEOTHERMAL BYPASS	0.00	2,857.01
7101	299671	10/09/26	20663	TRI TECH SALES	1015726200000000	0682	CHILLER ACTUATOR	0.00	4,036.76
TOTAL CHECK								0.00	7,817.96
7101	299672	10/09/26	20801	TYLER TECHNOLOGIES,	1000027201000000	0670	SUPPLIES	0.00	1,058.00
7101	299673	10/09/26	22101	VERIZON WIRELESS	1000023290008877	0532	PHONE SERVICES	0.00	360.09
7101	299673	10/09/26	22101	VERIZON WIRELESS	1000023290008877	0532	PHONE SERVICES	0.00	19.88
7101	299673	10/09/26	22101	VERIZON WIRELESS	1030523292113301	0532	PHONE SERVICES	0.00	25.45
7101	299673	10/09/26	22101	VERIZON WIRELESS	1000024100008877	0532	PHONE SERVICES	0.00	79.51
7101	299673	10/09/26	22101	VERIZON WIRELESS	1030223292113301	0532	PHONE SERVICES	0.00	25.45
7101	299673	10/09/26	22101	VERIZON WIRELESS	1030623292113301	0532	PHONE SERVICES	0.00	25.45
7101	299673	10/09/26	22101	VERIZON WIRELESS	1030623292114598	0532	PHONE SERVICES	0.00	25.46
7101	299673	10/09/26	22101	VERIZON WIRELESS	1030223292114598	0532	PHONE SERVICES	0.00	25.46
7101	299673	10/09/26	22101	VERIZON WIRELESS	1030523292114598	0532	PHONE SERVICES	0.00	25.46
TOTAL CHECK								0.00	612.21
7101	299674	10/09/26	23385	WINKLER ROOFING	1021126200000000	0432	SERVICE	0.00	282.25
7101	299695	10/16/26	57924	A-1 PREFERRED AIR D	1014926200000000	0432	COMMERCIAL HOOD CLE	0.00	450.00
7101	299695	10/16/26	57924	A-1 PREFERRED AIR D	1015226200000000	0432	COMMERCIAL HOOD CLE	0.00	450.00
7101	299695	10/16/26	57924	A-1 PREFERRED AIR D	1015526200000000	0432	COMMERCIAL HOOD CLE	0.00	450.00
7101	299695	10/16/26	57924	A-1 PREFERRED AIR D	1007126200000000	0432	COMMERCIAL HOOD CLE	0.00	1,500.00
7101	299695	10/16/26	57924	A-1 PREFERRED AIR D	1030226200000000	0432	COMMERCIAL HOOD CLE	0.00	600.00
7101	299695	10/16/26	57924	A-1 PREFERRED AIR D	1021126200000000	0432	COMMERCIAL HOOD CLE	0.00	600.00
7101	299695	10/16/26	57924	A-1 PREFERRED AIR D	1022026200000000	0432	COMMERCIAL HOOD CLE	0.00	600.00
7101	299695	10/16/26	57924	A-1 PREFERRED AIR D	1015926200000000	0432	COMMERCIAL HOOD CLE	0.00	450.00
7101	299695	10/16/26	57924	A-1 PREFERRED AIR D	1012226200000000	0432	COMMERCIAL HOOD CLE	0.00	450.00
7101	299695	10/16/26	57924	A-1 PREFERRED AIR D	1013326200000000	0432	COMMERCIAL HOOD CLE	0.00	450.00
7101	299695	10/16/26	57924	A-1 PREFERRED AIR D	1013426200000000	0432	COMMERCIAL HOOD CLE	0.00	450.00
TOTAL CHECK								0.00	6,450.00
7101	299696	10/16/26	56218	ACCESS TECHNOLOGIES	1030511001000000	0612	INSTRUCTIONAL SUPPL	0.00	518.49
7101	299697	10/16/26	01050	ACCO CORP	1030626200000000	0432	SERVICE	0.00	1,251.60

SELECTION CRITERIA: transact.account<'8000' and transact.ck_date between '20261009' and '20261021'
ACCOUNTING PERIOD: 4/27

FUND - 10 - GENERAL FUND

CASH ACCT	CHECK NO	ISSUE DT	VENDOR	NAME	ORGANIZATION	ACCNT	----DESCRIPTION----	SALES TAX	AMOUNT
7101	299698	10/16/26	01055	ACE ENGINES AND PAR	1021726400000000	0682	PARTS	0.00	210.00
7101	299698	10/16/26	01055	ACE ENGINES AND PAR	1000026400000000	0682	PARTS	0.00	248.24
7101	299698	10/16/26	01055	ACE ENGINES AND PAR	1000026400000000	0682	PARTS	0.00	286.89
7101	299698	10/16/26	01055	ACE ENGINES AND PAR	1000026400000000	0682	PARTS	0.00	51.08
7101	299698	10/16/26	01055	ACE ENGINES AND PAR	1030526400000000	0683	MAINTENANCE SUPPLIE	0.00	53.44
7101	299698	10/16/26	01055	ACE ENGINES AND PAR	1000026400000000	0682	PARTS	0.00	55.35
7101	299698	10/16/26	01055	ACE ENGINES AND PAR	1014026400000000	0682	PARTS	0.00	58.30
7101	299698	10/16/26	01055	ACE ENGINES AND PAR	1015726400000000	0683	MAINTENANCE SUPPLIE	0.00	99.00
TOTAL CHECK								0.00	1,062.30
7101	299700	10/16/26	012152	AMAZON CAPITAL SERV	1000022132113301	0613	PD SUPPLIES	0.00	42.46
7101	299700	10/16/26	012152	AMAZON CAPITAL SERV	1015611001000000	0612	INSTRUCTIONAL SUPPL	0.00	99.50
7101	299700	10/16/26	012152	AMAZON CAPITAL SERV	1021711001000000	0612	INSTRUCTIONAL SUPPL	0.00	96.12
7101	299700	10/16/26	012152	AMAZON CAPITAL SERV	1030222220000000	0618	OTHER GENERAL SUPPL	0.00	182.86
7101	299700	10/16/26	012152	AMAZON CAPITAL SERV	1015812004701118	0612	INSTRUCTIONAL SUPPL	0.00	219.84
7101	299700	10/16/26	012152	AMAZON CAPITAL SERV	1000023290008003	0618	OTHER GENERAL SUPPL	0.00	535.96
7101	299700	10/16/26	012152	AMAZON CAPITAL SERV	1000025860008877	0618	OTHER GENERAL SUPPL	0.00	541.94
7101	299700	10/16/26	012152	AMAZON CAPITAL SERV	1010012002173303	0612	INSTRUCTIONAL SUPPL	0.00	946.71
7101	299700	10/16/26	012152	AMAZON CAPITAL SERV	1030011003254531	0612	INSTRUCTIONAL SUPPL	0.00	1,006.68
7101	299700	10/16/26	012152	AMAZON CAPITAL SERV	1014511001000000	0612	INSTRUCTIONAL SUPPL	0.00	29.88
7101	299700	10/16/26	012152	AMAZON CAPITAL SERV	1014912002173303	0612	INSTRUCTIONAL SUPPL	0.00	29.97
7101	299700	10/16/26	012152	AMAZON CAPITAL SERV	1021711001160000	0612	INSTRUCTIONAL SUPPL	0.00	29.98
7101	299700	10/16/26	012152	AMAZON CAPITAL SERV	1021111001160000	0612	INSTRUCTIONAL SUPPL	0.00	29.98
7101	299700	10/16/26	012152	AMAZON CAPITAL SERV	1000023220000000	0618	OTHER GENERAL SUPPL	0.00	39.92
7101	299700	10/16/26	012152	AMAZON CAPITAL SERV	1015711001000000	0612	INSTRUCTIONAL SUPPL	0.00	42.23
7101	299700	10/16/26	012152	AMAZON CAPITAL SERV	1014024100000000	0611	OFFICE SUPPLIES	0.00	55.56
7101	299700	10/16/26	012152	AMAZON CAPITAL SERV	1015921904314501	0618	OTHER GENERAL SUPPL	0.00	49.42
7101	299700	10/16/26	012152	AMAZON CAPITAL SERV	1030211001020000	0612	INSTRUCTIONAL SUPPL	0.00	49.99
7101	299700	10/16/26	012152	AMAZON CAPITAL SERV	1022011001160000	0612	INSTRUCTIONAL SUPPL	0.00	59.96
7101	299700	10/16/26	012152	AMAZON CAPITAL SERV	1030511003700000	0612	INSTRUCTIONAL SUPPL	0.00	104.72
7101	299700	10/16/26	012152	AMAZON CAPITAL SERV	1012212002143302	0612	INSTRUCTIONAL SUPPL	0.00	129.62
7101	299700	10/16/26	012152	AMAZON CAPITAL SERV	1015512002173303	0618	OTHER GENERAL SUPPL	0.00	141.64
7101	299700	10/16/26	012152	AMAZON CAPITAL SERV	1021124100000000	0611	OFFICE SUPPLIES	0.00	152.69
7101	299700	10/16/26	012152	AMAZON CAPITAL SERV	1030612004701118	0641	TEXTBOOKS	0.00	167.98
7101	299700	10/16/26	012152	AMAZON CAPITAL SERV	1000026200000000	0683	MAINTENANCE SUPPLY	0.00	-38.79
7101	299700	10/16/26	012152	AMAZON CAPITAL SERV	1015724100000000	0611	OFFICE SUPPLIES	0.00	18.30
7101	299700	10/16/26	012152	AMAZON CAPITAL SERV	1010012002173303	0612	INSTRUCTIONAL SUPPL	0.00	24.74
7101	299700	10/16/26	012152	AMAZON CAPITAL SERV	1013412002173303	0612	INSTRUCTIONAL SUPPL	0.00	24.81
7101	299700	10/16/26	012152	AMAZON CAPITAL SERV	1015712002173303	0612	INSTRUCTIONAL SUPPL	0.00	27.49
7101	299700	10/16/26	012152	AMAZON CAPITAL SERV	1013412002173303	0618	OTHER GENERAL SUPPL	0.00	27.66
7101	299700	10/16/26	012152	AMAZON CAPITAL SERV	1015911001000000	0612	INSTRUCTIONAL SUPPL	0.00	61.74
7101	299700	10/16/26	012152	AMAZON CAPITAL SERV	1014124100000000	0618	OTHER GENERAL SUPPL	0.00	66.85
7101	299700	10/16/26	012152	AMAZON CAPITAL SERV	1015224100000000	0618	OTHER GENERAL SUPPL	0.00	67.48
7101	299700	10/16/26	012152	AMAZON CAPITAL SERV	1013312002173303	0618	OTHER GENERAL SUPPL	0.00	71.80
7101	299700	10/16/26	012152	AMAZON CAPITAL SERV	1013311001000000	0612	INSTRUCTIONAL SUPPL	0.00	78.02
7101	299700	10/16/26	012152	AMAZON CAPITAL SERV	1021712002173303	0618	OTHER GENERAL SUPPL	0.00	84.09
TOTAL CHECK								0.00	5,299.80
7101	299701	10/16/26	010026	A-OX WELDING SUPPLY	1000026200000000	0683	WELDER AND ACCESSOR	0.00	1,691.34

SELECTION CRITERIA: transact.account<'8000' and transact.ck_date between '20261009' and '20261021'
ACCOUNTING PERIOD: 4/27

FUND - 10 - GENERAL FUND

CASH ACCT	CHECK NO	ISSUE DT	VENDOR	NAME	ORGANIZATION	ACCNT	----DESCRIPTION----	SALES TAX	AMOUNT
7101	299702	10/16/26	03186	ASK2 MEDIA KERN PHO	1020011009200000	0618	OTHER GEN SUPPLIES	0.00	170.00
7101	299703	10/16/26	600985	BATTERIES PLUS	1000026200000000	0683	MAINTENANCE SUPPLIE	0.00	109.95
7101	299704	10/16/26	601393	BEN STAR PACKAGING	1000026300000000	0683	ICE MELT BY THE PAL	0.00	833.98
7101	299704	10/16/26	601393	BEN STAR PACKAGING	1015626200000000	0683	MAINTENANCE SUPPLIE	0.00	373.33
TOTAL CHECK								0.00	1,207.31
7101	299705	10/16/26	02195	BERNIE'S LAWN & GAR	1000026400000000	0683	MAINTENANCE SUPPLIE	0.00	17.98
7101	299706	10/16/26	55094	BILL'S AUTO PARTS	1000026500000000	0682	PARTS	0.00	63.49
7101	299706	10/16/26	55094	BILL'S AUTO PARTS	1000026500000000	0682	PARTS	0.00	255.17
TOTAL CHECK								0.00	318.66
7101	299707	10/16/26	02405	BRIGGS, INC	1000026200000000	0682	PARTS	0.00	163.31
7101	299707	10/16/26	02405	BRIGGS, INC	1000026200000000	0682	PARTS	0.00	3.51
TOTAL CHECK								0.00	166.82
7101	299708	10/16/26	02525	BURKE ENGINEERING C	1030626200000000	0682	PARTS	0.00	65.68
7101	299709	10/16/26	03050	CAMPBELL SUPPLY	1000026400000000	0683	MAINTENANCE SUPPLIE	0.00	558.00
7101	299710	10/16/26	03105	CAROLINA BIOLOGICAL	1030211001130000	0612	EAST HIGH SCHOOL SC	0.00	47.68
7101	299710	10/16/26	03105	CAROLINA BIOLOGICAL	1030211001130000	0612	227880- LARGE OWL P	0.00	219.45
7101	299710	10/16/26	03105	CAROLINA BIOLOGICAL	1030211001130000	0612	654230- INSECT MOUN	0.00	152.34
7101	299710	10/16/26	03105	CAROLINA BIOLOGICAL	1030211001130000	0612	228384- PERFECT SOL	0.00	768.25
7101	299710	10/16/26	03105	CAROLINA BIOLOGICAL	1030211001130000	0612	216620- LURIA BROTH	0.00	180.50
7101	299710	10/16/26	03105	CAROLINA BIOLOGICAL	1030211001130000	0612	228703- PERFECT SOL	0.00	517.20
7101	299710	10/16/26	03105	CAROLINA BIOLOGICAL	1030211001130000	0612	840936- FLAME TEST	0.00	227.85
7101	299710	10/16/26	03105	CAROLINA BIOLOGICAL	1030211001130000	0612	840921- PROPERTIES	0.00	256.35
7101	299710	10/16/26	03105	CAROLINA BIOLOGICAL	1030211001130000	0612	FREIGHT AND HANDLIN	0.00	250.00
TOTAL CHECK								0.00	2,619.62
7101	299711	10/16/26	03217	CHESTERMAN CO.	1000023210000000	0442	EQUIP RENTAL	0.00	27.50
7101	299712	10/16/26	03265	CITY OF SIOUX CITY	1030226200000000	0411	SEPTEMBER WATER	0.00	1,159.29
7101	299712	10/16/26	03265	CITY OF SIOUX CITY	1015826200000000	0411	SEPTEMBER WATER	0.00	1,440.22
7101	299712	10/16/26	03265	CITY OF SIOUX CITY	1000026200000000	0411	SEPTEMBER WATER	0.00	16,514.89
7101	299712	10/16/26	03265	CITY OF SIOUX CITY	1014126200000000	0411	SEPTEMBER WATER	0.00	32.51
7101	299712	10/16/26	03265	CITY OF SIOUX CITY	1000026200000000	0411	SEPTEMBER WATER	0.00	32.51
7101	299712	10/16/26	03265	CITY OF SIOUX CITY	1014526200000000	0411	SEPTEMBER WATER	0.00	32.51
7101	299712	10/16/26	03265	CITY OF SIOUX CITY	1021126200000000	0411	SEPTEMBER WATER	0.00	119.69
7101	299712	10/16/26	03265	CITY OF SIOUX CITY	1014126200000000	0411	SEPTEMBER WATER	0.00	683.03
7101	299712	10/16/26	03265	CITY OF SIOUX CITY	1014526200000000	0411	SEPTEMBER WATER	0.00	687.41
7101	299712	10/16/26	03265	CITY OF SIOUX CITY	1012426200000000	0411	SEPTEMBER WATER	0.00	924.47
7101	299712	10/16/26	03265	CITY OF SIOUX CITY	1030026200000000	0411	SEPTEMBER WATER	0.00	946.34
7101	299712	10/16/26	03265	CITY OF SIOUX CITY	1021126200000000	0411	SEPTEMBER WATER	0.00	961.35
7101	299712	10/16/26	03265	CITY OF SIOUX CITY	1014126200000000	0411	SEPTEMBER WATER	0.00	1,605.15
7101	299712	10/16/26	03265	CITY OF SIOUX CITY	1014026200000000	0411	SEPTEMBER WATER	0.00	1,766.25
7101	299712	10/16/26	03265	CITY OF SIOUX CITY	1021126200000000	0411	SEPTEMBER WATER	0.00	1,914.37
7101	299712	10/16/26	03265	CITY OF SIOUX CITY	1015926200000000	0411	SEPTEMBER WATER	0.00	1,956.53

SELECTION CRITERIA: transact.account<'8000' and transact.ck_date between '20261009' and '20261021'
ACCOUNTING PERIOD: 4/27

FUND - 10 - GENERAL FUND

CASH ACCT	CHECK NO	ISSUE DT	VENDOR	NAME	ORGANIZATION	ACCNT	----DESCRIPTION----	SALES TAX	AMOUNT
TOTAL CHECK								0.00	30,776.52
7101	299713	10/16/26	23442	COMMUNITY ACTION AG	1015426200000000	0423	CLEANING SERVICE	0.00	1,000.00
7101	299714	10/16/26	03608	CULLIGAN OF SIOUX C	1021126200000000	0432	SERVICE	0.00	392.90
7101	299715	10/16/26	57229	D&Z TRANSPORT	1021727901000000	0515	9/16-9/30 SS TRANSI	0.00	242.00
7101	299716	10/16/26	54386	DAKOTA SUPPLY GROUP	1022026200000000	0682	PARTS	0.00	391.26
7101	299716	10/16/26	54386	DAKOTA SUPPLY GROUP	1000026200000000	0682	WELL WATER METER	0.00	2,250.00
7101	299716	10/16/26	54386	DAKOTA SUPPLY GROUP	1000026200000000	0682	PIN COVER	0.00	2.00
7101	299716	10/16/26	54386	DAKOTA SUPPLY GROUP	1000026200000000	0682	SEAL TITE	0.00	20.24
7101	299716	10/16/26	54386	DAKOTA SUPPLY GROUP	1000026200000000	0682	HEX BOLTS	0.00	43.88
7101	299716	10/16/26	54386	DAKOTA SUPPLY GROUP	1000026200000000	0682	HEX NUT	0.00	14.28
TOTAL CHECK								0.00	2,721.66
7101	299717	10/16/26	56517	DEVEREUX ADVANCED B	1021712002173303	0569	LEVEL III TUITION	0.00	5,170.00
7101	299718	10/16/26	57718	ECHO ELECTRIC	1012426200000000	0682	PARTS	0.00	353.96
7101	299718	10/16/26	57718	ECHO ELECTRIC	1013326200000000	0682	PARTS	0.00	510.39
7101	299718	10/16/26	57718	ECHO ELECTRIC	1021126200000000	0682	PARTS	0.00	324.34
7101	299718	10/16/26	57718	ECHO ELECTRIC	1015826200000000	0682	PARTS	0.00	27.94
7101	299718	10/16/26	57718	ECHO ELECTRIC	1015226200000000	0683	MAINTENANCE SUPPLIE	0.00	45.83
TOTAL CHECK								0.00	1,262.46
7101	299719	10/16/26	052241	ELECTRICAL ENGINEER	1000026200000000	0683	MAINTENANCE SUPPLIE	0.00	13.14
7101	299720	10/16/26	57029	JEFF EVANS	1030527902183303	0516	9/1-9/30 MILEAGE	0.00	81.90
7101	299721	10/16/26	07350	GUARANTEE ROOFING C	1022026200000000	0432	SERVICE	0.00	1,900.00
7101	299721	10/16/26	07350	GUARANTEE ROOFING C	1021726200000000	0432	SERVICE	0.00	1,900.25
TOTAL CHECK								0.00	3,800.25
7101	299722	10/16/26	600121	H2O 4 U	1022024100000000	0892	WATER	0.00	81.53
7101	299723	10/16/26	56768	HEARTLAND TIRE	1000026500000000	0434	SERVICE	0.00	947.99
7101	299723	10/16/26	56768	HEARTLAND TIRE	1000026500000000	0434	SERVICE	0.00	986.83
TOTAL CHECK								0.00	1,934.82
7101	299724	10/16/26	08300	HILLYARD FLOOR CARE	1030226400000000	0682	PARTS	0.00	253.09
7101	299724	10/16/26	08300	HILLYARD FLOOR CARE	1030226400000000	0682	PARTS	0.00	138.13
7101	299724	10/16/26	08300	HILLYARD FLOOR CARE	1015626400000000	0682	PARTS	0.00	176.18
7101	299724	10/16/26	08300	HILLYARD FLOOR CARE	1022026400000000	0682	PARTS	0.00	40.26
7101	299724	10/16/26	08300	HILLYARD FLOOR CARE	1021126400000000	0682	PARTS	0.00	19.86
7101	299724	10/16/26	08300	HILLYARD FLOOR CARE	1014926400000000	0682	PARTS	0.00	82.45
TOTAL CHECK								0.00	709.97
7101	299725	10/16/26	57042	IMON COMMUNICATIONS	1000025850008877	0536	INTERNET SERVICES	0.00	1,600.83
7101	299725	10/16/26	57042	IMON COMMUNICATIONS	1000022360008877	0536	INTERNET SERVICES	0.00	1,891.89
7101	299725	10/16/26	57042	IMON COMMUNICATIONS	1000023290008877	0532	TELEPHONE SERVICES	0.00	672.88
7101	299725	10/16/26	57042	IMON COMMUNICATIONS	1000024100008877	0532	TELEPHONE SERVICES	0.00	746.57

SELECTION CRITERIA: transact.account<'8000' and transact.ck_date between '20261009' and '20261021'
ACCOUNTING PERIOD: 4/27

FUND - 10 - GENERAL FUND

CASH ACCT	CHECK NO	ISSUE DT	VENDOR	NAME	ORGANIZATION	ACCNT	----DESCRIPTION----	SALES TAX	AMOUNT
TOTAL CHECK								0.00	4,912.17
7101	299726	10/16/26	57093	INTERSTATE BATTERY	1021126400000000	0682	PARTS	0.00	727.80
7101	299726	10/16/26	57093	INTERSTATE BATTERY	1021126600000000	0682	PARTS	0.00	490.44
7101	299726	10/16/26	57093	INTERSTATE BATTERY	1000026600000000	0682	PARTS REFUND	0.00	-58.50
TOTAL CHECK								0.00	1,159.74
7101	299727	10/16/26	09221	IOWA DEPARTMENT OF	1000000000000000	1999	TITLE I REFUND	0.00	1,229.06
7101	299727	10/16/26	09221	IOWA DEPARTMENT OF	1000000004314501	4501	TITLE I REFUND	0.00	6,145.30
TOTAL CHECK								0.00	7,374.36
7101	299728	10/16/26	09233	IOWA DEPT OF NATURA	1000026200000000	0810	NPDES ANNUAL PERMIT	0.00	300.00
7101	299728	10/16/26	09233	IOWA DEPT OF NATURA	1015726200000000	0810	LH WATER PERMIT	0.00	120.00
7101	299728	10/16/26	09233	IOWA DEPT OF NATURA	1015626200000000	0810	SPALDING WATER PERM	0.00	120.00
7101	299728	10/16/26	09233	IOWA DEPT OF NATURA	1015926200000000	0810	MSIDE WATER PERMIT	0.00	120.00
TOTAL CHECK								0.00	660.00
7101	299729	10/16/26	09162	ISI, LLC	10133215321833O3	0323	INTERPRETER	0.00	3,469.00
7101	299730	10/16/26	090002	ISTATE TRUCK CENTER	1000027401000000	0673	PARTS	0.00	1,073.75
7101	299730	10/16/26	090002	ISTATE TRUCK CENTER	1000027401000000	0673	PARTS	0.00	89.14
7101	299730	10/16/26	090002	ISTATE TRUCK CENTER	1000027401000000	0673	ENGINE BLOCK SERVIC	0.00	22,793.81
7101	299730	10/16/26	090002	ISTATE TRUCK CENTER	1000027401000000	0673	PARTS	0.00	7.84
TOTAL CHECK								0.00	23,964.54
7101	299731	10/16/26	16157	J W PEPPER AND SON,	10306110011200O0	0612	INSTRUCTIONAL SUPPL	0.00	75.00
7101	299732	10/16/26	10172	JOHNSTONE SUPPLY	1013426200000000	0683	MAINTENANCE SUPPLIE	0.00	102.22
7101	299733	10/16/26	11135	KIMBALL MIDWEST	1000027401000000	0670	SUPPLIES	0.00	131.62
7101	299734	10/16/26	003695	LEUER'S LAMINATION	1022024100000000	0349	LAMINATION FILL	0.00	90.00
7101	299735	10/16/26	12447	LINDBLOM SERVICES I	1020011009200000	0442	EQUIP RENTAL	0.00	189.00
7101	299736	10/16/26	13059	MAIL HOUSE	1000025100000000	0531	POSTAGE	0.00	871.44
7101	299738	10/16/26	13240	MCGRAW-HILL	1015612002143302	0641	CORRECTIVE READING	0.00	104.62
7101	299738	10/16/26	13240	MCGRAW-HILL	1015612002113301	0641	CORRECTIVE READING	0.00	104.63
7101	299738	10/16/26	13240	MCGRAW-HILL	1015212002113301	0642	EXPRESSIVE WRITING	0.00	51.18
7101	299738	10/16/26	13240	MCGRAW-HILL	1015212002143302	0642	EXPRESSIVE WRITING	0.00	51.18
7101	299738	10/16/26	13240	MCGRAW-HILL	1015212002113301	0642	ESTIMATED SHIPPING/	0.00	12.31
7101	299738	10/16/26	13240	MCGRAW-HILL	1015212002143302	0642	ESTIMATED SHIPPING/	0.00	12.31
7101	299738	10/16/26	13240	MCGRAW-HILL	1015612002143302	0642	CORRECTIVE READING	0.00	31.57
7101	299738	10/16/26	13240	MCGRAW-HILL	1015612002113301	0642	CORRECTIVE READING	0.00	31.58
7101	299738	10/16/26	13240	MCGRAW-HILL	1015612002113301	0612	CORRECTIVE READING	0.00	130.84
7101	299738	10/16/26	13240	MCGRAW-HILL	1015612002143302	0612	CORRECTIVE READING	0.00	130.84
7101	299738	10/16/26	13240	MCGRAW-HILL	1015612002113301	0641	CORRECTIVE READING	0.00	105.55
7101	299738	10/16/26	13240	MCGRAW-HILL	1015612002143302	0641	CORRECTIVE READING	0.00	105.55
7101	299738	10/16/26	13240	MCGRAW-HILL	1015612002143302	0642	CORRECTIVE READING	0.00	31.57
7101	299738	10/16/26	13240	MCGRAW-HILL	1015612002113301	0642	CORRECTIVE READING	0.00	31.58

SELECTION CRITERIA: transact.account<'8000' and transact.ck_date between '20261009' and '20261021'
ACCOUNTING PERIOD: 4/27

FUND - 10 - GENERAL FUND

CASH ACCT	CHECK NO	ISSUE DT	VENDOR	NAME	ORGANIZATION	ACCNT	----DESCRIPTION----	SALES TAX	AMOUNT
7101	299738	10/16/26	13240	MCGRAW-HILL	1015612002113301	0652	READING MASTERY GRA	0.00	162.24
7101	299738	10/16/26	13240	MCGRAW-HILL	1015612002143302	0652	READING MASTERY GRA	0.00	162.24
7101	299738	10/16/26	13240	MCGRAW-HILL	1015612002113301	0612	ESTIMATED SHIPPING/	0.00	36.92
7101	299738	10/16/26	13240	MCGRAW-HILL	1015612002113301	0641	ESTIMATED SHIPPING/	0.00	36.92
7101	299738	10/16/26	13240	MCGRAW-HILL	1015612002113301	0642	ESTIMATED SHIPPING/	0.00	36.92
7101	299738	10/16/26	13240	MCGRAW-HILL	1015612002143302	0612	ESTIMATED SHIPPING/	0.00	36.92
7101	299738	10/16/26	13240	MCGRAW-HILL	1015612002143302	0641	ESTIMATED SHIPPING/	0.00	36.92
7101	299738	10/16/26	13240	MCGRAW-HILL	1015612002143302	0642	ESTIMATED SHIPPING/	0.00	36.93
7101	299738	10/16/26	13240	MCGRAW-HILL	10140110011300000	0641	INSPIRE SCIENCE STU	0.00	137.40
7101	299738	10/16/26	13240	MCGRAW-HILL	10140110011300000	0641	INSPIRE SCIENCE STU	0.00	137.40
7101	299738	10/16/26	13240	MCGRAW-HILL	10140110011300000	0641	INSPIRE SCIENCE STU	0.00	137.40
7101	299738	10/16/26	13240	MCGRAW-HILL	10140110011300000	0641	INSPIRE SCIENCE STU	0.00	137.40
7101	299738	10/16/26	13240	MCGRAW-HILL	10140110011300000	0641	ESTIMATED SHIPPING/	0.00	70.17
7101	299738	10/16/26	13240	MCGRAW-HILL	1015612002113301	0642	CONNECTIMG MATH CON	0.00	7.54
7101	299738	10/16/26	13240	MCGRAW-HILL	1015612002143302	0642	CONNECTIMG MATH CON	0.00	7.55
7101	299738	10/16/26	13240	MCGRAW-HILL	1015612002113301	0642	CMC STUDENT ASSESSM	0.00	5.01
7101	299738	10/16/26	13240	MCGRAW-HILL	1015612002143302	0642	CMC STUDENT ASSESSM	0.00	5.01
7101	299738	10/16/26	13240	MCGRAW-HILL	1015612002143302	0642	CMC WORKBOOK 1 LEVE	0.00	52.81
7101	299738	10/16/26	13240	MCGRAW-HILL	1015612002113301	0642	CMC WORKBOOK 1 LEVE	0.00	52.82
7101	299738	10/16/26	13240	MCGRAW-HILL	1015612002113301	0642	CMC STUDENT ASSESSM	0.00	35.07
7101	299738	10/16/26	13240	MCGRAW-HILL	1015612002143302	0642	CMC STUDENT ASSESSM	0.00	35.07
7101	299738	10/16/26	13240	MCGRAW-HILL	1015612002113301	0612	ESTIMATED SHIPPING/	0.00	70.88
7101	299738	10/16/26	13240	MCGRAW-HILL	1015612002143302	0612	ESTIMATED SHIPPING/	0.00	70.88
7101	299738	10/16/26	13240	MCGRAW-HILL	1015512002113301	0642	EXPRESSIVE WRITING	0.00	243.10
7101	299738	10/16/26	13240	MCGRAW-HILL	1015512002143302	0642	EXPRESSIVE WRITING	0.00	243.11
7101	299738	10/16/26	13240	MCGRAW-HILL	1015512002113301	0642	CONNECTING MATH CON	0.00	30.18
7101	299738	10/16/26	13240	MCGRAW-HILL	1015512002143302	0642	CONNECTING MATH CON	0.00	30.18
7101	299738	10/16/26	13240	MCGRAW-HILL	1015512002113301	0642	CONNECTING MATH CON	0.00	20.04
7101	299738	10/16/26	13240	MCGRAW-HILL	1015512002143302	0642	CONNECTING MATH CON	0.00	20.04
7101	299738	10/16/26	13240	MCGRAW-HILL	1015512002113301	0642	CMC WORKBOOK 1 LEVE	0.00	30.18
7101	299738	10/16/26	13240	MCGRAW-HILL	1015512002143302	0642	CMC WORKBOOK 1 LEVE	0.00	30.18
7101	299738	10/16/26	13240	MCGRAW-HILL	1015512002113301	0642	CMC STUDENT ASSESSM	0.00	20.04
7101	299738	10/16/26	13240	MCGRAW-HILL	1015512002143302	0642	CMC STUDENT ASSESSM	0.00	20.04
7101	299738	10/16/26	13240	MCGRAW-HILL	1015512002143302	0641	CMC TEXTBOOKS LEVEL	0.00	192.46
7101	299738	10/16/26	13240	MCGRAW-HILL	1015512002113301	0641	CMC TEXTBOOKS LEVEL	0.00	192.47
7101	299738	10/16/26	13240	MCGRAW-HILL	1015512002143302	0642	CMC WORKBOOK 1 LEVE	0.00	52.81
7101	299738	10/16/26	13240	MCGRAW-HILL	1015512002113301	0642	CMC WORKBOOK 1 LEVE	0.00	52.82
7101	299738	10/16/26	13240	MCGRAW-HILL	1015512002143302	0642	CMC WORKBOOK LEVEL	0.00	43.57
7101	299738	10/16/26	13240	MCGRAW-HILL	1015512002113301	0642	CMC WORKBOOK LEVEL	0.00	43.58
7101	299738	10/16/26	13240	MCGRAW-HILL	1015512002113301	0642	CMC ASSESSMENT BOOK	0.00	25.05
7101	299738	10/16/26	13240	MCGRAW-HILL	1015512002143302	0642	CMC ASSESSMENT BOOK	0.00	25.05
7101	299738	10/16/26	13240	MCGRAW-HILL	1015512002143302	0652	CMC TEACHER LICENSE	0.00	52.24
7101	299738	10/16/26	13240	MCGRAW-HILL	1015512002113301	0652	CMC TEACHER LICENSE	0.00	52.25
7101	299738	10/16/26	13240	MCGRAW-HILL	1015512002113301	0641	ESTIMATED SHIPPING/	0.00	19.14
7101	299738	10/16/26	13240	MCGRAW-HILL	1015512002113301	0642	ESTIMATED SHIPPING/	0.00	19.14
7101	299738	10/16/26	13240	MCGRAW-HILL	1015512002143302	0641	ESTIMATED SHIPPING/	0.00	19.14
7101	299738	10/16/26	13240	MCGRAW-HILL	1015512002143302	0642	ESTIMATED SHIPPING/	0.00	19.15
7101	299738	10/16/26	13240	MCGRAW-HILL	1015512002143302	0642	ESTIMATED SHIPPING/	0.00	24.08
7101	299738	10/16/26	13240	MCGRAW-HILL	1015512002113301	0642	ESTIMATED SHIPPING/	0.00	24.09
7101	299738	10/16/26	13240	MCGRAW-HILL	1015612002113301	0652	TECH SOFTWARE	0.00	208.98
7101	299738	10/16/26	13240	MCGRAW-HILL	1015612002143302	0612	INSTRUCTIONAL SUPPL	0.00	1,024.74

SELECTION CRITERIA: transact.account<'8000' and transact.ck_date between '20261009' and '20261021'
ACCOUNTING PERIOD: 4/27

FUND - 10 - GENERAL FUND

CASH ACCT	CHECK NO	ISSUE DT	VENDOR	NAME	ORGANIZATION	ACCNT	----DESCRIPTION----	SALES TAX	AMOUNT
7101	299738	10/16/26	13240	MCGRAW-HILL	1015612002143302	0642	EXPRESSIVE WRITING	0.00	38.38
7101	299738	10/16/26	13240	MCGRAW-HILL	1015612002113301	0642	EXPRESSIVE WRITING	0.00	38.39
7101	299738	10/16/26	13240	MCGRAW-HILL	1015612002113301	0612	CORRECTIVE READING	0.00	383.29
7101	299738	10/16/26	13240	MCGRAW-HILL	1015612002143302	0612	CORRECTIVE READING	0.00	383.29
7101	299738	10/16/26	13240	MCGRAW-HILL	1015612002113301	0642	CORRECTIVE READING	0.00	14.20
7101	299738	10/16/26	13240	MCGRAW-HILL	1015612002143302	0642	CORRECTIVE READING	0.00	14.20
7101	299738	10/16/26	13240	MCGRAW-HILL	1015612002113301	0652	CORRECTIVE READING	0.00	8.82
7101	299738	10/16/26	13240	MCGRAW-HILL	1015612002143302	0652	CORRECTIVE READING	0.00	8.82
7101	299738	10/16/26	13240	MCGRAW-HILL	1015612002113301	0612	CORRECTIVE READING	0.00	261.68
7101	299738	10/16/26	13240	MCGRAW-HILL	1015612002143302	0612	CORRECTIVE READING	0.00	261.68
TOTAL CHECK								0.00	6,634.33
7101	299739	10/16/26	13423	MICROFILM IMAGING S	1000023290000000	0442	EQUIP RENTAL	0.00	50.00
7101	299740	10/16/26	13465	MIDAMERICAN ENERGY	1000026200000000	0622	SEPTEMBER ELECTRIC	0.00	1,587.36
7101	299740	10/16/26	13465	MIDAMERICAN ENERGY	1000026200000000	0622	SEPTEMBER ELECTRIC	0.00	10.50
7101	299740	10/16/26	13465	MIDAMERICAN ENERGY	1000026200000000	0622	SEPTEMBER ELECTRIC	0.00	25.02
7101	299740	10/16/26	13465	MIDAMERICAN ENERGY	1030226200000000	0622	SEPTEMBER ELECTRIC	0.00	34.38
7101	299740	10/16/26	13465	MIDAMERICAN ENERGY	1030026200000000	0622	SEPTEMBER ELECTRIC	0.00	2,697.89
7101	299740	10/16/26	13465	MIDAMERICAN ENERGY	1012426200000000	0622	SEPTEMBER ELECTRIC	0.00	3,378.37
7101	299740	10/16/26	13465	MIDAMERICAN ENERGY	1014926200000000	0622	SEPTEMBER ELECTRIC	0.00	5,112.47
7101	299740	10/16/26	13465	MIDAMERICAN ENERGY	1015926200000000	0622	AUGUST ELECTRIC	0.00	5,319.09
7101	299740	10/16/26	13465	MIDAMERICAN ENERGY	1015826200000000	0622	SEPTEMBER ELECTRIC	0.00	5,840.97
7101	299740	10/16/26	13465	MIDAMERICAN ENERGY	1015926200000000	0622	SEPTEMBER ELECTRIC	0.00	7,299.02
7101	299740	10/16/26	13465	MIDAMERICAN ENERGY	1013426200000000	0622	SEPTEMBER ELECTRIC	0.00	7,416.71
7101	299740	10/16/26	13465	MIDAMERICAN ENERGY	1000026200000000	0622	SEPTEMBER ELECTRIC	0.00	8,172.01
7101	299740	10/16/26	13465	MIDAMERICAN ENERGY	1030026200000000	0622	SEPTEMBER ELECTRIC	0.00	8,881.30
7101	299740	10/16/26	13465	MIDAMERICAN ENERGY	1015426200000000	0622	SEPTEMBER ELECTRIC	0.00	988.10
7101	299740	10/16/26	13465	MIDAMERICAN ENERGY	1000026200000000	0622	SEPTEMBER ELECTRIC	0.00	738.62
7101	299740	10/16/26	13465	MIDAMERICAN ENERGY	1030526200000000	0622	AUGUST ELECTRIC	0.00	356.55
TOTAL CHECK								0.00	57,858.36
7101	299745	10/16/26	13429	RAY'S MIDBELL MUSIC	1021726401120000	0433	EQUIP SERVICES	0.00	50.99
7101	299745	10/16/26	13429	RAY'S MIDBELL MUSIC	1030626401120000	0433	EQUIP SERVICES	0.00	56.35
7101	299745	10/16/26	13429	RAY'S MIDBELL MUSIC	1015226401120000	0433	EQUIP SERVICES	0.00	70.43
7101	299745	10/16/26	13429	RAY'S MIDBELL MUSIC	1015826401120000	0433	EQUIP SERVICES	0.00	79.08
7101	299745	10/16/26	13429	RAY'S MIDBELL MUSIC	1015826401120000	0433	EQUIP SERVICES	0.00	79.08
7101	299745	10/16/26	13429	RAY'S MIDBELL MUSIC	1030226401120000	0433	EQUIP SERVICES	0.00	82.88
7101	299745	10/16/26	13429	RAY'S MIDBELL MUSIC	1012226401120000	0433	EQUIP SERVICES	0.00	83.06
7101	299745	10/16/26	13429	RAY'S MIDBELL MUSIC	1030526401120000	0433	EQUIP SERVICES	0.00	73.22
7101	299745	10/16/26	13429	RAY'S MIDBELL MUSIC	1030526401120000	0433	EQUIP SERVICES	0.00	38.48
7101	299745	10/16/26	13429	RAY'S MIDBELL MUSIC	1015826401120000	0433	EQUIP SERVICES	0.00	46.10
7101	299745	10/16/26	13429	RAY'S MIDBELL MUSIC	1015826401120000	0433	EQUIP SERVICES	0.00	46.10
7101	299745	10/16/26	13429	RAY'S MIDBELL MUSIC	1015826401120000	0433	EQUIP SERVICES	0.00	46.10
7101	299745	10/16/26	13429	RAY'S MIDBELL MUSIC	1015826401120000	0433	EQUIP SERVICES	0.00	46.10
7101	299745	10/16/26	13429	RAY'S MIDBELL MUSIC	1015826401120000	0433	EQUIP SERVICES	0.00	46.10
7101	299745	10/16/26	13429	RAY'S MIDBELL MUSIC	1015826401120000	0433	EQUIP SERVICES	0.00	46.10
7101	299745	10/16/26	13429	RAY'S MIDBELL MUSIC	1015826401120000	0433	EQUIP SERVICES	0.00	46.10
7101	299745	10/16/26	13429	RAY'S MIDBELL MUSIC	1015811001120000	0612	CREDIT REFUND	0.00	-150.00
7101	299745	10/16/26	13429	RAY'S MIDBELL MUSIC	1015811001120000	0612	INSTRUCTIONAL SUPPL	0.00	6.00

SELECTION CRITERIA: transact.account<'8000' and transact.ck_date between '20261009' and '20261021'
ACCOUNTING PERIOD: 4/27

FUND - 10 - GENERAL FUND

CASH ACCT	CHECK NO	ISSUE DT	VENDOR	NAME	ORGANIZATION	ACCNT	----DESCRIPTION----	SALES TAX	AMOUNT
7101	299745	10/16/26	13429	RAY'S MIDBELL MUSIC	1022026401120000	0433	EQUIP SERVICES	0.00	11.50
7101	299745	10/16/26	13429	RAY'S MIDBELL MUSIC	1015726401120000	0433	EQUIP SERVICES	0.00	12.00
7101	299745	10/16/26	13429	RAY'S MIDBELL MUSIC	1021711001120000	0612	INSTRUCTIONAL SUPPL	0.00	12.70
7101	299745	10/16/26	13429	RAY'S MIDBELL MUSIC	1015811001120000	0612	INSTRUCTIONAL SUPPL	0.00	14.00
7101	299745	10/16/26	13429	RAY'S MIDBELL MUSIC	1015511001120000	0612	INSTRUCTIONAL SUPPL	0.00	194.98
7101	299745	10/16/26	13429	RAY'S MIDBELL MUSIC	1022026401120000	0433	EQUIP SERVICES	0.00	196.79
7101	299745	10/16/26	13429	RAY'S MIDBELL MUSIC	1015826401120000	0433	EQUIP SERVICES	0.00	198.12
7101	299745	10/16/26	13429	RAY'S MIDBELL MUSIC	1015826401120000	0433	EQUIP SERVICES	0.00	199.31
7101	299745	10/16/26	13429	RAY'S MIDBELL MUSIC	1021126401120000	0433	EQUIP SERVICES	0.00	207.58
7101	299745	10/16/26	13429	RAY'S MIDBELL MUSIC	1015826401120000	0433	EQUIP SERVICES	0.00	208.18
7101	299745	10/16/26	13429	RAY'S MIDBELL MUSIC	1030626401120000	0433	EQUIP SERVICES	0.00	220.56
7101	299745	10/16/26	13429	RAY'S MIDBELL MUSIC	1015826401120000	0433	EQUIP SERVICES	0.00	224.49
7101	299745	10/16/26	13429	RAY'S MIDBELL MUSIC	1015826401120000	0433	EQUIP SERVICES	0.00	161.11
7101	299745	10/16/26	13429	RAY'S MIDBELL MUSIC	1015826401120000	0433	EQUIP SERVICES	0.00	162.35
7101	299745	10/16/26	13429	RAY'S MIDBELL MUSIC	1015826401120000	0433	EQUIP SERVICES	0.00	163.63
7101	299745	10/16/26	13429	RAY'S MIDBELL MUSIC	1015826401120000	0433	EQUIP SERVICES	0.00	156.18
7101	299745	10/16/26	13429	RAY'S MIDBELL MUSIC	1021126401120000	0433	EQUIP SERVICES	0.00	90.43
7101	299745	10/16/26	13429	RAY'S MIDBELL MUSIC	1015826401120000	0433	EQUIP SERVICES	0.00	91.22
7101	299745	10/16/26	13429	RAY'S MIDBELL MUSIC	1030626401120000	0433	EQUIP SERVICES	0.00	92.07
7101	299745	10/16/26	13429	RAY'S MIDBELL MUSIC	1030626401120000	0433	EQUIP SERVICES	0.00	172.77
7101	299745	10/16/26	13429	RAY'S MIDBELL MUSIC	1015826401120000	0433	EQUIP SERVICES	0.00	173.29
7101	299745	10/16/26	13429	RAY'S MIDBELL MUSIC	1021126401120000	0433	EQUIP SERVICES	0.00	173.77
7101	299745	10/16/26	13429	RAY'S MIDBELL MUSIC	1015826401120000	0433	EQUIP SERVICES	0.00	182.94
7101	299745	10/16/26	13429	RAY'S MIDBELL MUSIC	1021126401120000	0433	EQUIP SERVICES	0.00	185.94
7101	299745	10/16/26	13429	RAY'S MIDBELL MUSIC	1015826401120000	0433	EQUIP SERVICES	0.00	116.90
7101	299745	10/16/26	13429	RAY'S MIDBELL MUSIC	1021726401120000	0433	EQUIP SERVICES	0.00	117.97
7101	299745	10/16/26	13429	RAY'S MIDBELL MUSIC	1021126401120000	0433	EQUIP SERVICES	0.00	135.98
7101	299745	10/16/26	13429	RAY'S MIDBELL MUSIC	1015826401120000	0433	EQUIP SERVICES	0.00	148.58
7101	299745	10/16/26	13429	RAY'S MIDBELL MUSIC	1015826401120000	0433	EQUIP SERVICES	0.00	149.39
7101	299745	10/16/26	13429	RAY'S MIDBELL MUSIC	1015826401120000	0433	EQUIP SERVICES	0.00	149.40
7101	299745	10/16/26	13429	RAY'S MIDBELL MUSIC	1015826401120000	0433	EQUIP SERVICES	0.00	149.40
7101	299745	10/16/26	13429	RAY'S MIDBELL MUSIC	1015811001120000	0612	INSTRUCTIONAL SUPPL	0.00	150.00
7101	299745	10/16/26	13429	RAY'S MIDBELL MUSIC	1021111001120000	0612	INSTRUCTIONAL SUPPL	0.00	150.89
7101	299745	10/16/26	13429	RAY'S MIDBELL MUSIC	1015826401120000	0433	EQUIP SERVICES	0.00	154.24
7101	299745	10/16/26	13429	RAY'S MIDBELL MUSIC	1015826401120000	0433	EQUIP SERVICES	0.00	168.24
7101	299745	10/16/26	13429	RAY'S MIDBELL MUSIC	1015826401120000	0433	EQUIP SERVICES	0.00	168.28
7101	299745	10/16/26	13429	RAY'S MIDBELL MUSIC	1015826401120000	0433	EQUIP SERVICES	0.00	129.44
7101	299745	10/16/26	13429	RAY'S MIDBELL MUSIC	1015826401120000	0433	EQUIP SERVICES	0.00	130.76
7101	299745	10/16/26	13429	RAY'S MIDBELL MUSIC	1015826401120000	0433	EQUIP SERVICES	0.00	133.12
7101	299745	10/16/26	13429	RAY'S MIDBELL MUSIC	1015826401120000	0433	EQUIP SERVICES	0.00	133.12
7101	299745	10/16/26	13429	RAY'S MIDBELL MUSIC	1015826401120000	0433	EQUIP SERVICES	0.00	133.12
7101	299745	10/16/26	13429	RAY'S MIDBELL MUSIC	1015826401120000	0433	EQUIP SERVICES	0.00	133.12
7101	299745	10/16/26	13429	RAY'S MIDBELL MUSIC	1015826401120000	0433	EQUIP SERVICES	0.00	133.12
7101	299745	10/16/26	13429	RAY'S MIDBELL MUSIC	1015826401120000	0433	EQUIP SERVICES	0.00	133.12
7101	299745	10/16/26	13429	RAY'S MIDBELL MUSIC	1015826401120000	0433	EQUIP SERVICES	0.00	133.12
7101	299745	10/16/26	13429	RAY'S MIDBELL MUSIC	1015826401120000	0433	EQUIP SERVICES	0.00	133.12
7101	299745	10/16/26	13429	RAY'S MIDBELL MUSIC	1015826401120000	0433	EQUIP SERVICES	0.00	133.12
7101	299745	10/16/26	13429	RAY'S MIDBELL MUSIC	1015826401120000	0433	EQUIP SERVICES	0.00	133.12
7101	299745	10/16/26	13429	RAY'S MIDBELL MUSIC	1015826401120000	0433	EQUIP SERVICES	0.00	133.12
7101	299745	10/16/26	13429	RAY'S MIDBELL MUSIC	1015826401120000	0433	EQUIP SERVICES	0.00	133.12
7101	299745	10/16/26	13429	RAY'S MIDBELL MUSIC	1015826401120000	0433	EQUIP SERVICES	0.00	133.12
7101	299745	10/16/26	13429	RAY'S MIDBELL MUSIC	1015826401120000	0433	EQUIP SERVICES	0.00	133.12
7101	299745	10/16/26	13429	RAY'S MIDBELL MUSIC	1015826401120000	0433	EQUIP SERVICES	0.00	133.12
7101	299745	10/16/26	13429	RAY'S MIDBELL MUSIC	1015826401120000	0433	EQUIP SERVICES	0.00	133.12

SELECTION CRITERIA: transact.account<'8000' and transact.ck_date between '20261009' and '20261021'
ACCOUNTING PERIOD: 4/27

FUND - 10 - GENERAL FUND

CASH ACCT	CHECK NO	ISSUE DT	VENDOR	NAME	ORGANIZATION	ACCNT	----DESCRIPTION----	SALES TAX	AMOUNT
7101	299745	10/16/26	13429	RAY'S MIDBELL MUSIC	1015826401120000	0433	EQUIP SERVICES	0.00	133.12
7101	299745	10/16/26	13429	RAY'S MIDBELL MUSIC	1030211001120000	0612	INSTRUCTIONAL SUPPL	0.00	133.89
7101	299745	10/16/26	13429	RAY'S MIDBELL MUSIC	1015826401120000	0433	EQUIP SERVICES	0.00	104.26
7101	299745	10/16/26	13429	RAY'S MIDBELL MUSIC	1015826401120000	0433	EQUIP SERVICES	0.00	104.26
7101	299745	10/16/26	13429	RAY'S MIDBELL MUSIC	1015826401120000	0433	EQUIP SERVICES	0.00	104.26
7101	299745	10/16/26	13429	RAY'S MIDBELL MUSIC	1015826401120000	0433	EQUIP SERVICES	0.00	105.96
7101	299745	10/16/26	13429	RAY'S MIDBELL MUSIC	1015826401120000	0433	EQUIP SERVICES	0.00	106.70
7101	299745	10/16/26	13429	RAY'S MIDBELL MUSIC	1015826401120000	0433	EQUIP SERVICES	0.00	68.99
7101	299745	10/16/26	13429	RAY'S MIDBELL MUSIC	1015826401120000	0433	EQUIP SERVICES	0.00	275.88
7101	299745	10/16/26	13429	RAY'S MIDBELL MUSIC	1030511001120000	0612	INSTRUCTIONAL SUPPL	0.00	292.91
7101	299745	10/16/26	13429	RAY'S MIDBELL MUSIC	1030211001120000	0612	INSTRUCTIONAL SUPPL	0.00	298.97
7101	299745	10/16/26	13429	RAY'S MIDBELL MUSIC	1021126401120000	0433	EQUIP SERVICES	0.00	306.69
7101	299745	10/16/26	13429	RAY'S MIDBELL MUSIC	1022011001120000	0612	INSTRUCTIONAL SUPPL	0.00	332.83
7101	299745	10/16/26	13429	RAY'S MIDBELL MUSIC	1021126401120000	0433	EQUIP SERVICES	0.00	332.98
7101	299745	10/16/26	13429	RAY'S MIDBELL MUSIC	1021726401120000	0433	EQUIP SERVICES	0.00	355.70
7101	299745	10/16/26	13429	RAY'S MIDBELL MUSIC	1015826401120000	0433	EQUIP SERVICES	0.00	156.26
7101	299745	10/16/26	13429	RAY'S MIDBELL MUSIC	1021126401120000	0433	EQUIP SERVICES	0.00	225.87
7101	299745	10/16/26	13429	RAY'S MIDBELL MUSIC	1015826401120000	0433	EQUIP SERVICES	0.00	231.25
7101	299745	10/16/26	13429	RAY'S MIDBELL MUSIC	1015826401120000	0433	EQUIP SERVICES	0.00	240.01
7101	299745	10/16/26	13429	RAY'S MIDBELL MUSIC	1015826401120000	0433	EQUIP SERVICES	0.00	244.03
7101	299745	10/16/26	13429	RAY'S MIDBELL MUSIC	1030226401120000	0433	EQUIP SERVICES	0.00	245.43
7101	299745	10/16/26	13429	RAY'S MIDBELL MUSIC	1021126401120000	0433	EQUIP SERVICES	0.00	254.63
7101	299745	10/16/26	13429	RAY'S MIDBELL MUSIC	1015826401120000	0433	EQUIP SERVICES	0.00	257.22
7101	299745	10/16/26	13429	RAY'S MIDBELL MUSIC	1015826401120000	0433	EQUIP SERVICES	0.00	270.61
7101	299745	10/16/26	13429	RAY'S MIDBELL MUSIC	1015826401120000	0433	EQUIP SERVICES	0.00	273.60
7101	299745	10/16/26	13429	RAY'S MIDBELL MUSIC	1022026401120000	0433	EQUIP SERVICES	0.00	456.91
7101	299745	10/16/26	13429	RAY'S MIDBELL MUSIC	1030511001120000	0612	INSTRUCTIONAL SUPPL	0.00	1,070.59
7101	299745	10/16/26	13429	RAY'S MIDBELL MUSIC	1021726401120000	0433	EQUIP SERVICES	0.00	394.65
TOTAL CHECK								0.00	15,472.77
7101	299746	10/16/26	13448	MID-STEP SERVICES	10134120021833O3	0323	PROF SERVICES	0.00	7,560.00
7101	299747	10/16/26	134521	MIDWEST ALARM COMPA	1000026600000000	0682	PARTS	0.00	896.04
7101	299747	10/16/26	134521	MIDWEST ALARM COMPA	1000026600000000	0682	PARTS	0.00	896.04
TOTAL CHECK								0.00	1,792.08
7101	299748	10/16/26	57605	MIDWEST BUS PARTS I	1000027401000000	0673	PARTS	0.00	635.86
7101	299748	10/16/26	57605	MIDWEST BUS PARTS I	1000027401000000	0673	PARTS	0.00	154.37
TOTAL CHECK								0.00	790.23
7101	299749	10/16/26	13674	MOZAK'S FURNITURE &	1030526200000000	0683	MAINTENANCE SUPPLIE	0.00	870.48
7101	299750	10/16/26	57836	NATIONAL PRINT + PR	1000025100000000	0618	W-2 AND 1099 FORMS	0.00	626.30
7101	299751	10/16/26	197622	NEW CENTURY FS	1000027201000000	0623	PROPANE	0.00	1,371.05
7101	299751	10/16/26	197622	NEW CENTURY FS	1000027201000000	0623	PROPANE	0.00	1,780.52
TOTAL CHECK								0.00	3,151.57
7101	299752	10/16/26	14360	NOVELTY MACHINE & S	1030526200000000	0682	PARTS	0.00	83.78
7101	299753	10/16/26	15015	O'REILLY AUTO PARTS	1000026500000000	0682	PARTS	0.00	126.62

SIOUX CITY COMMUNITY SCHOOLS
CHECK REGISTER - BY FUND

SELECTION CRITERIA: transact.account<'8000' and transact.ck_date between '20261009' and '20261021'
ACCOUNTING PERIOD: 4/27

FUND - 10 - GENERAL FUND

CASH ACCT	CHECK NO	ISSUE DT	VENDOR	NAME	ORGANIZATION	ACCNT	----DESCRIPTION----	SALES TAX	AMOUNT
7101	299753	10/16/26	15015	O'REILLY AUTO PARTS	1000026500000000	0682	PARTS	0.00	39.04
7101	299753	10/16/26	15015	O'REILLY AUTO PARTS	1000026500000000	0682	PARTS	0.00	40.03
7101	299753	10/16/26	15015	O'REILLY AUTO PARTS	1000026500000000	0682	PARTS	0.00	59.80
7101	299753	10/16/26	15015	O'REILLY AUTO PARTS	1000027401000000	0673	PARTS	0.00	8.99
7101	299753	10/16/26	15015	O'REILLY AUTO PARTS	1000026500000000	0682	PARTS REFUND	0.00	-39.04
7101	299753	10/16/26	15015	O'REILLY AUTO PARTS	1000026500000000	0682	PARTS	0.00	462.04
7101	299753	10/16/26	15015	O'REILLY AUTO PARTS	1000026500000000	0682	PARTS	0.00	529.11
7101	299753	10/16/26	15015	O'REILLY AUTO PARTS	1000026500000000	0682	PARTS	0.00	274.00
TOTAL CHECK								0.00	1,500.59
7101	299754	10/16/26	15116	OVERHEAD DOOR COMPA	1000026200000000	0432	SERVICE	0.00	325.00
7101	299755	10/16/26	000365	PRAIRIE LAKES AREA	1015824100000000	0611	STAFF PLANNERS FOR	0.00	956.70
7101	299756	10/16/26	16447	PROGRESS PUBLICATIO	1014911001000000	0612	INSTRUCTIONAL SUPPL	0.00	665.00
7101	299757	10/16/26	180951	RECOVER HEALTH	1014921342183303	0347	NURSING	0.00	410.80
7101	299757	10/16/26	180951	RECOVER HEALTH	1030221342183303	0347	NURSING	0.00	2,803.45
7101	299757	10/16/26	180951	RECOVER HEALTH	1015721342183303	0347	NURSING	0.00	1,413.10
7101	299757	10/16/26	180951	RECOVER HEALTH	1015621342183303	0347	NURSING	0.00	1,416.35
7101	299757	10/16/26	180951	RECOVER HEALTH	1022021342183303	0347	NURSING	0.00	2,037.75
7101	299757	10/16/26	180951	RECOVER HEALTH	1021121342183303	0347	NURSING	0.00	71.50
TOTAL CHECK								0.00	8,152.95
7101	299758	10/16/26	18184	COMMUNITY PLAYTHING	1050211001004669	0612	HOLY CROSS BLESSED	0.00	536.00
7101	299758	10/16/26	18184	COMMUNITY PLAYTHING	1050211001004669	0612	G472- SET OF 24 DOU	0.00	127.00
7101	299758	10/16/26	18184	COMMUNITY PLAYTHING	1050211001004669	0612	G502- SET OF 8 UNIT	0.00	34.00
7101	299758	10/16/26	18184	COMMUNITY PLAYTHING	1050211001004669	0612	G506- SET OF 4 UNIT	0.00	34.00
7101	299758	10/16/26	18184	COMMUNITY PLAYTHING	1050211001004669	0612	G507- SET OF 8 UNIT	0.00	40.00
7101	299758	10/16/26	18184	COMMUNITY PLAYTHING	1050211001004669	0612	G505- SET OF 4 UNIT	0.00	34.00
7101	299758	10/16/26	18184	COMMUNITY PLAYTHING	1050211001004669	0612	F661- FIXED SHELF 3	0.00	480.00
TOTAL CHECK								0.00	1,285.00
7101	299759	10/16/26	23160	ROCHESTER ARMORED C	1007125100000000	0349	PROF SERVICES	0.00	751.22
7101	299760	10/16/26	10041	ROSECRANCE JACKSON	10	7153	25-26 4TH QUARTER	0.00	1,730.82
7101	299761	10/16/26	56941	SAPP BROS, INC	1000027201000000	0626	SPED GAS	0.00	540.57
7101	299761	10/16/26	56941	SAPP BROS, INC	1000027201000000	0627	DIESEL DEF	0.00	526.85
7101	299761	10/16/26	56941	SAPP BROS, INC	1000026500000000	0627	ONM DIESEL MISC	0.00	634.53
7101	299761	10/16/26	56941	SAPP BROS, INC	1007126500000000	0626	FOOD SVC GAS	0.00	435.05
7101	299761	10/16/26	56941	SAPP BROS, INC	1030227209100000	0626	EAST VEHICLES	0.00	363.45
7101	299761	10/16/26	56941	SAPP BROS, INC	1000027201000000	0626	REG BUS GAS	0.00	1,082.26
7101	299761	10/16/26	56941	SAPP BROS, INC	1000026500000000	0626	ONM GAS MISC	0.00	2,587.65
7101	299761	10/16/26	56941	SAPP BROS, INC	1000027201000000	0627	REG AND SPED BUS	0.00	19,825.05
7101	299761	10/16/26	56941	SAPP BROS, INC	1000027201000000	0626	ALT SCHOOL	0.00	72.38
7101	299761	10/16/26	56941	SAPP BROS, INC	1030527209100000	0626	NORTH VEHICLES	0.00	76.63
7101	299761	10/16/26	56941	SAPP BROS, INC	1030627209100000	0626	WEST VEHICLES	0.00	132.84
7101	299761	10/16/26	56941	SAPP BROS, INC	1030527201210000	0626	NORTH DRIVERS ED	0.00	17.84
7101	299761	10/16/26	56941	SAPP BROS, INC	1030627201210000	0626	WEST DRIVERS ED	0.00	17.84
7101	299761	10/16/26	56941	SAPP BROS, INC	1030227201210000	0626	EAST DRIVERS ED	0.00	17.84

SIOUX CITY COMMUNITY SCHOOLS
CHECK REGISTER - BY FUND

SELECTION CRITERIA: transact.account<'8000' and transact.ck_date between '20261009' and '20261021'
ACCOUNTING PERIOD: 4/27

FUND - 10 - GENERAL FUND

CASH ACCT	CHECK NO	ISSUE DT	VENDOR	NAME	ORGANIZATION	ACCNT	----DESCRIPTION----	SALES TAX	AMOUNT
TOTAL CHECK								0.00	26,330.78
7101	299762	10/16/26	12138	SCHOOL SPECIALTY	1015711001020000	0612	INSTRUCTIONAL SUPPL	0.00	274.58
7101	299762	10/16/26	12138	SCHOOL SPECIALTY	1021111001020000	0612	INSTRUCTIONAL SUPPL	0.00	391.89
7101	299762	10/16/26	12138	SCHOOL SPECIALTY	1021711001020000	0612	INSTRUCTIONAL SUPPL	0.00	69.58
7101	299762	10/16/26	12138	SCHOOL SPECIALTY	1014511001020000	0612	INSTRUCTIONAL SUPPL	0.00	125.39
7101	299762	10/16/26	12138	SCHOOL SPECIALTY	1015911001020000	0612	INSTRUCTIONAL SUPPL	0.00	1,189.98
7101	299762	10/16/26	12138	SCHOOL SPECIALTY	1015924100000000	0618	CUBBY UNIT FOR A NE	0.00	595.63
TOTAL CHECK								0.00	2,647.05
7101	299763	10/16/26	192911	SHANE'S GLASS & MOR	1030026200000000	0432	SERVICE	0.00	105.00
7101	299763	10/16/26	192911	SHANE'S GLASS & MOR	1030626200000000	0682	PARTS	0.00	56.88
TOTAL CHECK								0.00	161.88
7101	299764	10/16/26	19364	SIGNS BY TOMORROW	1021126300000000	0682	PARTS	0.00	234.00
7101	299765	10/16/26	20140	SIOUX CITY FORD	1000026500000000	0682	PARTS	0.00	219.09
7101	299765	10/16/26	20140	SIOUX CITY FORD	1000026500000000	0434	MISC SUPPLIES	0.00	155.00
7101	299765	10/16/26	20140	SIOUX CITY FORD	1000026500000000	0434	MOTOR REPLACEMENT	0.00	7,533.51
7101	299765	10/16/26	20140	SIOUX CITY FORD	1000026500000000	0434	ENGINE ASSEMBLY	0.00	3,840.00
TOTAL CHECK								0.00	11,747.60
7101	299766	10/16/26	19446	SIOUX CITY JOURNAL-	1000025720000000	0540	SEPT AMP DIGITAL PP	0.00	750.00
7101	299766	10/16/26	19446	SIOUX CITY JOURNAL-	1000025720000000	0540	26-27 EMP RECOGNITI	0.00	1,000.00
7101	299766	10/16/26	19446	SIOUX CITY JOURNAL-	1000025720000000	0540	AUG AMP DIGITAL PPC	0.00	1,000.00
7101	299766	10/16/26	19446	SIOUX CITY JOURNAL-	1000025720000000	0540	26-27 EMP RECOGNITI	0.00	1,000.00
7101	299766	10/16/26	19446	SIOUX CITY JOURNAL-	1000025720000000	0540	JULY JOB POSTNG CAM	0.00	6,000.00
TOTAL CHECK								0.00	9,750.00
7101	299767	10/16/26	19460	SIOUX CITY NIGHT PA	1000025100000000	0531	MAIL DELIVERY	0.00	2,509.50
7101	299767	10/16/26	19460	SIOUX CITY NIGHT PA	1022026600000000	0490	NMS NIGHT PATROL	0.00	225.00
7101	299767	10/16/26	19460	SIOUX CITY NIGHT PA	1021126600000000	0490	EMS NIGHT PATROL	0.00	180.00
7101	299767	10/16/26	19460	SIOUX CITY NIGHT PA	1030226600000000	0490	EHS NIGHT PATROL	0.00	135.00
7101	299767	10/16/26	19460	SIOUX CITY NIGHT PA	1015226600000000	0490	UNITY NIGHT PATROL	0.00	45.00
7101	299767	10/16/26	19460	SIOUX CITY NIGHT PA	1014926600000000	0490	LEEDS NIGHT PATROL	0.00	45.00
7101	299767	10/16/26	19460	SIOUX CITY NIGHT PA	1030026600000000	0490	CA NIGHT PATROL	0.00	45.00
7101	299767	10/16/26	19460	SIOUX CITY NIGHT PA	1013326600000000	0490	HUNT NIGHT PATROL	0.00	45.00
7101	299767	10/16/26	19460	SIOUX CITY NIGHT PA	1015926600000000	0490	MSIDE NIGHT PATROL	0.00	45.00
7101	299767	10/16/26	19460	SIOUX CITY NIGHT PA	1030526600000000	0490	NHS NIGHT PATROL	0.00	45.00
7101	299767	10/16/26	19460	SIOUX CITY NIGHT PA	1015826600000000	0490	PC NIGHT PATROL	0.00	45.00
7101	299767	10/16/26	19460	SIOUX CITY NIGHT PA	1012226600000000	0490	BRYANT NIGHT PATROL	0.00	90.00
7101	299767	10/16/26	19460	SIOUX CITY NIGHT PA	1015626600000000	0490	SP NIGHT PATROL	0.00	90.00
7101	299767	10/16/26	19460	SIOUX CITY NIGHT PA	1015726600000000	0490	LH NIGHT PATROL	0.00	90.00
7101	299767	10/16/26	19460	SIOUX CITY NIGHT PA	1000026600000000	0490	ONM NIGHT PATROL	0.00	90.00
7101	299767	10/16/26	19460	SIOUX CITY NIGHT PA	1030626600000000	0490	WHS NIGHT PATROL	0.00	135.00
TOTAL CHECK								0.00	3,859.50
7101	299768	10/16/26	19468	SIOUX CITY WINNELSO	1000026200000000	0682	PARTS	0.00	130.31
7101	299768	10/16/26	19468	SIOUX CITY WINNELSO	1021126200000000	0682	PARTS	0.00	109.02
7101	299768	10/16/26	19468	SIOUX CITY WINNELSO	1015626200000000	0682	PARTS	0.00	46.80
7101	299768	10/16/26	19468	SIOUX CITY WINNELSO	1000026200000000	0682	PARTS	0.00	46.81

SIOUX CITY COMMUNITY SCHOOLS
CHECK REGISTER - BY FUND

SELECTION CRITERIA: transact.account<'8000' and transact.ck_date between '20261009' and '20261021'
ACCOUNTING PERIOD: 4/27

FUND - 10 - GENERAL FUND

CASH ACCT	CHECK NO	ISSUE DT	VENDOR	NAME	ORGANIZATION	ACCNT	----DESCRIPTION----	SALES TAX	AMOUNT
7101	299768	10/16/26	19468	SIOUX CITY WINNELSO	1021726200000000	0682	PARTS	0.00	28.07
7101	299768	10/16/26	19468	SIOUX CITY WINNELSO	1012426200000000	0682	PARTS	0.00	23.99
7101	299768	10/16/26	19468	SIOUX CITY WINNELSO	1007126200000000	0682	PARTS	0.00	19.13
7101	299768	10/16/26	19468	SIOUX CITY WINNELSO	1015826200000000	0682	PARTS	0.00	13.45
7101	299768	10/16/26	19468	SIOUX CITY WINNELSO	1000026200000000	0682	PARTS	0.00	243.78
7101	299768	10/16/26	19468	SIOUX CITY WINNELSO	1021126200000000	0682	PARTS	0.00	243.78
TOTAL CHECK								0.00	905.14
7101	299769	10/16/26	19525	SIOUXLAND LOCK & KE	1015226200000000	0682	PARTS	0.00	13.35
7101	299769	10/16/26	19525	SIOUXLAND LOCK & KE	1000026200000000	0683	MAINTENANCE SUPPLIE	0.00	19.50
7101	299769	10/16/26	19525	SIOUXLAND LOCK & KE	1015926200000000	0683	MAINTENANCE SUPPLIE	0.00	19.50
7101	299769	10/16/26	19525	SIOUXLAND LOCK & KE	1021726200000000	0683	MAINTENANCE SUPPLIE	0.00	24.25
7101	299769	10/16/26	19525	SIOUXLAND LOCK & KE	1015226200000000	0683	MAINTENANCE SUPPLIE	0.00	19.95
7101	299769	10/16/26	19525	SIOUXLAND LOCK & KE	1013326200000000	0683	MAINTENANCE SUPPLIE	0.00	28.50
7101	299769	10/16/26	19525	SIOUXLAND LOCK & KE	1000026200000000	0682	PARTS	0.00	87.00
TOTAL CHECK								0.00	212.05
7101	299770	10/16/26	19604	SOOLAND BOBCAT	1000026300000000	0442	EQUIPMENT RENTAL	0.00	210.00
7101	299770	10/16/26	19604	SOOLAND BOBCAT	1015226300000000	0442	EQUIPMENT RENTAL	0.00	210.00
TOTAL CHECK								0.00	420.00
7101	299771	10/16/26	084441	STAN HOUSTON-SIOUX	1000026500000000	0683	MAINTENANCE SUPPLIE	0.00	170.97
7101	299771	10/16/26	084441	STAN HOUSTON-SIOUX	1000026300000000	0683	MAINTENANCE SUPPLIE	0.00	825.00
7101	299771	10/16/26	084441	STAN HOUSTON-SIOUX	1000026400000000	0433	SERVICE	0.00	387.67
7101	299771	10/16/26	084441	STAN HOUSTON-SIOUX	1000027401000000	0670	SUPPLIES	0.00	86.25
7101	299771	10/16/26	084441	STAN HOUSTON-SIOUX	1030626200000000	0682	PARTS	0.00	22.95
TOTAL CHECK								0.00	1,492.84
7101	299772	10/16/26	19780	STATE STEEL SUPPLY	1030626300000000	0683	MAINTENANCE SUPPLIE	0.00	895.00
7101	299773	10/16/26	20295	THOMPSON	1014126600000000	0682	PARTS	0.00	111.89
7101	299773	10/16/26	20295	THOMPSON	1030626600000000	0682	PARTS	0.00	111.89
TOTAL CHECK								0.00	223.78
7101	299774	10/16/26	53985	TRANSPERFECT TRANSL	1000021900000000	0349	PROF SERVICES	0.00	3,063.94
7101	299775	10/16/26	23206	WESTERN IOWA TECH C	1000025740000000	0331	TRUCK DRIVER TRAINI	0.00	760.00
7101	299775	10/16/26	23206	WESTERN IOWA TECH C	1000025740000000	0331	TRUCK DRIVING LAB	0.00	300.00
TOTAL CHECK								0.00	1,060.00
7101	299776	10/16/26	26015	ZANER-BLOSER, INC	1010011004314508	0612	KICKSTART:COUNTING	0.00	7,143.00
7101	299776	10/16/26	26015	ZANER-BLOSER, INC	1010011004314508	0652	1 EARLY NUMBER AND	0.00	7.00
7101	299776	10/16/26	26015	ZANER-BLOSER, INC	1010011004314508	0652	1 ONLINE ACCESS SUB	0.00	10.00
TOTAL CHECK								0.00	7,160.00
TOTAL CASH ACCOUNT								0.00	1,042,890.58
TOTAL FUND								0.00	1,042,890.58

SELECTION CRITERIA: transact.account<'8000' and transact.ck_date between '20261009' and '20261021'
ACCOUNTING PERIOD: 4/27

FUND - 1A - BRYANT ACTIVITY FUND

CASH ACCT	CHECK NO	ISSUE DT	VENDOR	NAME	ORGANIZATION	ACCNT	----DESCRIPTION----	SALES TAX	AMOUNT
7101	1020552	10/09/26	012152	AMAZON CAPITAL SERV	1A12211001009466	0612	THE UZZLE BOARD GAM	0.00	39.99
7101	1020552	10/09/26	012152	AMAZON CAPITAL SERV	1A12211001009466	0612	MEDICAL SUPPLIES	0.00	81.33
TOTAL CHECK								0.00	121.32
7101	1020584	10/16/26	012152	AMAZON CAPITAL SERV	1A12211001009466	0612	STU INCENTIVE SUPPL	0.00	84.19
TOTAL CASH ACCOUNT								0.00	205.51
TOTAL FUND								0.00	205.51

SELECTION CRITERIA: transact.account<'8000' and transact.ck_date between '20261009' and '20261021'
ACCOUNTING PERIOD: 4/27

FUND - 1I - IRVING ACTIVITY FUND

CASH ACCT	CHECK NO	ISSUE DT	VENDOR	NAME	ORGANIZATION	ACCNT	----DESCRIPTION----	SALES TAX	AMOUNT
7101	1020553	10/09/26	012152	AMAZON CAPITAL SERV	1I13411001009114	0618	STUDENT SUPPLIES	0.00	239.96
7101	1020585	10/16/26	012152	AMAZON CAPITAL SERV	1I13411001009114	0618	ITEMS NEEDED FOR ST	0.00	70.94
7101	V1000403	10/14/26	18273	MARIA RUELAS	1I13411001009114	0618	SCHOOL PARADE CANDY	0.00	160.62
TOTAL CASH ACCOUNT								0.00	471.52
TOTAL FUND								0.00	471.52

SELECTION CRITERIA: transact.account<'8000' and transact.ck_date between '20261009' and '20261021'
ACCOUNTING PERIOD: 4/27

FUND - 1K - LEEDS ACTIVITY FUND

CASH ACCT	CHECK NO	ISSUE DT	VENDOR	NAME	ORGANIZATION	ACCNT	----DESCRIPTION----	SALES TAX	AMOUNT
7101	1020554	10/09/26	012152	AMAZON CAPITAL SERV	1K14924100009056	0618	DIGITAL WALL CLOCK	0.00	20.98
7101	1020586	10/16/26	012152	AMAZON CAPITAL SERV	1K14924100009056	0618	GAMING CHAIR	0.00	179.96
TOTAL CASH ACCOUNT								0.00	200.94
TOTAL FUND								0.00	200.94

SIOUX CITY COMMUNITY SCHOOLS
CHECK REGISTER - BY FUND

SELECTION CRITERIA: transact.account<'8000' and transact.ck_date between '20261009' and '20261021'
ACCOUNTING PERIOD: 4/27

FUND - 1M - MORNINGSIDE ACTIVITY FUND

CASH ACCT	CHECK NO	ISSUE DT	VENDOR	NAME	ORGANIZATION	ACCNT	----DESCRIPTION----	SALES TAX	AMOUNT
7101	1020555	10/09/26	012152	AMAZON CAPITAL SERV	1M15911001169497	0618	3D PRINTER SUPPLIES	0.00	119.95
7101	1020555	10/09/26	012152	AMAZON CAPITAL SERV	1M15911001009466	0618	COWBOY BANDANAS	0.00	-12.88
TOTAL CHECK								0.00	107.07
7101	1020587	10/16/26	012152	AMAZON CAPITAL SERV	1M15914009109565	0618	STU CO SUPPLIES	0.00	240.81
7101	1020588	10/16/26	18097	RED WHEEL FUNDRAISI	1M15911001009466	0618	PBIS FUNDRAISER	0.00	8,791.46
TOTAL CASH ACCOUNT								0.00	9,139.34
TOTAL FUND								0.00	9,139.34

SELECTION CRITERIA: transact.account<'8000' and transact.ck_date between '20261009' and '20261021'
ACCOUNTING PERIOD: 4/27

FUND - 1N - LIBERTY ACTIVITY FUND

CASH ACCT	CHECK NO	ISSUE DT	VENDOR	NAME	ORGANIZATION	ACCNT	----DESCRIPTION----	SALES TAX	AMOUNT
7101	1020589	10/16/26	57996	DRINKQ BOX LLC	1N15524100009056	0892	DIRTY SODAS	0.00	390.00
TOTAL CASH ACCOUNT								0.00	390.00
TOTAL FUND								0.00	390.00

SELECTION CRITERIA: transact.account<'8000' and transact.ck_date between '20261009' and '20261021'
ACCOUNTING PERIOD: 4/27

FUND - 1X - SPALDING PK ACTIVITY FUND

CASH ACCT	CHECK NO	ISSUE DT	VENDOR	NAME	ORGANIZATION	ACCNT	----DESCRIPTION----	SALES TAX	AMOUNT
7101	1020556	10/09/26	012152	AMAZON CAPITAL SERV	1X15611001009114	0618	ASSORTED STICKERS	0.00	18.98
7101	1020556	10/09/26	012152	AMAZON CAPITAL SERV	1X15611001009114	0618	M&M'S CHOCOLATE CAN	0.00	49.32
TOTAL CHECK								0.00	68.30
7101	1020557	10/09/26	57524	POPPIN POPCORN, LLC	1X15611001009114	0618	SCHOOL WIDE FUNDRAI	0.00	357.00
7101	1020590	10/16/26	012152	AMAZON CAPITAL SERV	1X15611001009114	0618	COLLAPSIBLE WAGON	0.00	144.36
TOTAL CASH ACCOUNT								0.00	569.66
TOTAL FUND								0.00	569.66

SELECTION CRITERIA: transact.account<'8000' and transact.ck_date between '20261009' and '20261021'
ACCOUNTING PERIOD: 4/27

FUND - 2A - EAST MIDDLE ACTIVITY FUND

CASH ACCT	CHECK NO	ISSUE DT	VENDOR	NAME	ORGANIZATION	ACCNT	----DESCRIPTION----	SALES TAX	AMOUNT
7101	1020558	10/09/26	012152	AMAZON CAPITAL SERV	2A21124100009056	0618	STU FEMININE SUPPLI	0.00	83.33
7101	1020559	10/09/26	56019	NORTHWEST IOWA BAND	2A21114009109504	0815	EMS HONOR BAND ENTR	0.00	125.00
TOTAL CASH ACCOUNT								0.00	208.33
TOTAL FUND								0.00	208.33

SELECTION CRITERIA: transact.account<'8000' and transact.ck_date between '20261009' and '20261021'
ACCOUNTING PERIOD: 4/27

FUND - 2C - WEST MIDDLE ACTIVITY FUND

CASH ACCT	CHECK NO	ISSUE DT	VENDOR	NAME	ORGANIZATION	ACCNT	----DESCRIPTION----	SALES TAX	AMOUNT
7101	1020560	10/09/26	012152	AMAZON CAPITAL SERV	2C21722220009055	0618	MEDIA CENTER ITEMS	0.00	86.38
TOTAL CASH ACCOUNT								0.00	86.38
TOTAL FUND								0.00	86.38

SELECTION CRITERIA: transact.account<'8000' and transact.ck_date between '20261009' and '20261021'
ACCOUNTING PERIOD: 4/27

FUND - 2E - NORTH MIDDLE ACTIVTY FUND

CASH ACCT	CHECK NO	ISSUE DT	VENDOR	NAME	ORGANIZATION	ACCNT	----DESCRIPTION----	SALES TAX	AMOUNT
7101	1020591	10/16/26	012152	AMAZON CAPITAL SERV	2E22011001009203	0618	STARS MINI ACCENTS	0.00	6.34
7101	1020591	10/16/26	012152	AMAZON CAPITAL SERV	2E22014009109596	0618	RIBBON WANDS - CHOI	0.00	35.98
TOTAL CHECK								0.00	42.32
7101	1020592	10/16/26	13429	RAY'S MIDBELL MUSIC	2E22014009109504	0618	VALVE CAP	0.00	20.00
7101	1020592	10/16/26	13429	RAY'S MIDBELL MUSIC	2E22014009109504	0618	REEDS	0.00	74.97
7101	1020592	10/16/26	13429	RAY'S MIDBELL MUSIC	2E22014009109504	0618	REEDS / MUSIC BOOKS	0.00	88.95
7101	1020592	10/16/26	13429	RAY'S MIDBELL MUSIC	2E22014009109504	0618	INSTRUMENT LYRES	0.00	150.87
7101	1020592	10/16/26	13429	RAY'S MIDBELL MUSIC	2E22014009109504	0618	TROMBONE LYRE	0.00	101.94
7101	1020592	10/16/26	13429	RAY'S MIDBELL MUSIC	2E22014009109504	0618	CHIME MALLET	0.00	32.99
TOTAL CHECK								0.00	469.72
7101	1020593	10/16/26	56019	NORTHWEST IOWA BAND	2E22014009109504	0815	NMS HONOR BAND ENTR	0.00	60.00
7101	1020593	10/16/26	56019	NORTHWEST IOWA BAND	2E22014009109504	0815	BAND ENTRY LATE FEE	0.00	20.00
TOTAL CHECK								0.00	80.00
TOTAL CASH ACCOUNT								0.00	592.04
TOTAL FUND								0.00	592.04

SELECTION CRITERIA: transact.account<'8000' and transact.ck_date between '20261009' and '20261021'
ACCOUNTING PERIOD: 4/27

FUND - 33 - SALES TAX CAP PROJ FUND

CASH ACCT	CHECK NO	ISSUE DT	VENDOR	NAME	ORGANIZATION	ACCNT	----DESCRIPTION----	SALES TAX	AMOUNT
7101	299675	10/09/26	03448	CONTINENTAL FIRE SP	3315547000008012	0617	LIBERTY COMPASS RM	0.00	1,475.57
7101	299676	10/09/26	57706	CREATIVE SITES	3315246000008922	0739	ELEMENTARTY PLAYGRO	0.00	150,734.00
7101	299677	10/09/26	55250	HIRSHFIELD'S INC	3315547000008012	0617	LIBERTY COMPASS RM	0.00	495.28
7101	299677	10/09/26	55250	HIRSHFIELD'S INC	3315547000008012	0617	LIBERTY COMPASS RM	0.00	60.71
7101	299677	10/09/26	55250	HIRSHFIELD'S INC	3315547000008012	0617	LIBERTY COMPASS RM	0.00	61.52
7101	299677	10/09/26	55250	HIRSHFIELD'S INC	3315547000008012	0617	LIBERTY COMPASS RM	0.00	142.56
TOTAL CHECK								0.00	760.07
7101	299678	10/09/26	10063	JARCO	3315547000008012	0617	LIBERTY COMPASS RM	0.00	297.46
7101	299679	10/09/26	19468	SIOUX CITY WINNELSO	3315547000008012	0617	LIBERTY COMPASS RM	0.00	11.00
7101	299777	10/16/26	56259	ACCESS SYSTEMS LEAS	3300011001009801	0443	TECH RENTAL	0.00	9,751.07
7101	299778	10/16/26	032961	CMBA ARCHITECTS	3322047000008662	0343	NMS ROOF RENOVATION	0.00	7,500.00
7101	299779	10/16/26	12003	L & L BUILDERS CO	3330547000008924	0451	NHS POOL REPAIR	0.00	6,290.13
7101	299779	10/16/26	12003	L & L BUILDERS CO	3330647000008924	0451	WHS POOL REPAIR	0.00	6,290.13
7101	299779	10/16/26	12003	L & L BUILDERS CO	3330547000008924	0451	NHS POOL REPAIR	0.00	5,231.29
7101	299779	10/16/26	12003	L & L BUILDERS CO	3330647000008924	0451	WHS POOL REPAIR	0.00	5,231.29
TOTAL CHECK								0.00	23,042.84
7101	299780	10/16/26	12138	SCHOOL SPECIALTY	3300011001009801	0733	CHAIRS FOR HOMESCHO	0.00	238.24
7101	299781	10/16/26	19755	SIOUXLAND CONCRETE	3330646000008259	0617	WHS CONCRETE	0.00	1,433.00
7101	299782	10/16/26	56607	VERNE SIMMONDS COMP	3330647000008921	0739	STAINLESS STEEL WAT	0.00	13,049.68
7101	299782	10/16/26	56607	VERNE SIMMONDS COMP	3330647000008921	0739	CIRCULATING PUMP	0.00	1,117.20
7101	299782	10/16/26	56607	VERNE SIMMONDS COMP	3330547000008921	0739	STAINLESS STEEL WAT	0.00	13,049.68
7101	299782	10/16/26	56607	VERNE SIMMONDS COMP	3330547000008921	0739	CIRCULATING PUMP	0.00	1,117.20
TOTAL CHECK								0.00	28,333.76
TOTAL CASH ACCOUNT								0.00	223,577.01
TOTAL FUND								0.00	223,577.01

SELECTION CRITERIA: transact.account<'8000' and transact.ck_date between '20261009' and '20261021'
ACCOUNTING PERIOD: 4/27

FUND - 36 - PHYS PLANT & EQUIP FUND

CASH ACCT	CHECK NO	ISSUE DT	VENDOR	NAME	ORGANIZATION	ACCNT	----DESCRIPTION----	SALES TAX	AMOUNT
7101	299680	10/09/26	11187	KNOEPFLER CHEVROLET	3600026500000000	0732	3500 HD CHEVY SILVE	0.00	49,500.00
TOTAL CASH ACCOUNT								0.00	49,500.00
TOTAL FUND								0.00	49,500.00

SELECTION CRITERIA: transact.account<'8000' and transact.ck_date between '20261009' and '20261021'
ACCOUNTING PERIOD: 4/27

FUND - 3A - EAST HIGH ACTIVITY FUND

CASH ACCT	CHECK NO	ISSUE DT	VENDOR	NAME	ORGANIZATION	ACCNT	----DESCRIPTION----	SALES TAX	AMOUNT
7101	1020561	10/09/26	600301	ACE ICE	3A30214009209502	0442	EH SEPT-FEB 26-27	0.00	360.00
7101	1020562	10/09/26	01341	AMERICAN POPCORN CO	3A30214009209646	0618	OLSEN CONCESSION	0.00	540.00
7101	1020562	10/09/26	01341	AMERICAN POPCORN CO	3A30214009209646	0618	OLSEN CONCESSIONS	0.00	170.00
TOTAL CHECK								0.00	710.00
7101	1020563	10/09/26	03186	ASK2 MEDIA KERN PHO	3A30214009109600	0618	EH DANCE BANER	0.00	42.00
7101	1020563	10/09/26	03186	ASK2 MEDIA KERN PHO	3A30214009209548	0618	EH CHEER BANNER	0.00	55.75
7101	1020563	10/09/26	03186	ASK2 MEDIA KERN PHO	3A30214009209514	0618	EH XC BANNER	0.00	55.75
7101	1020563	10/09/26	03186	ASK2 MEDIA KERN PHO	3A30214009209520	0618	EH BGOLF BANNER	0.00	55.75
7101	1020563	10/09/26	03186	ASK2 MEDIA KERN PHO	3A30214009209517	0618	EH FBALL BANNER	0.00	55.75
TOTAL CHECK								0.00	265.00
7101	1020564	10/09/26	03151	BISHOP HEELAN CATHO	3A30214009209513	0815	EH XC ENTRY FEE	0.00	300.00
7101	1020565	10/09/26	57106	BSN SPORTS	3A30214009209517	0618	BLACK GUARDIAN CAP	0.00	700.00
7101	1020565	10/09/26	57106	BSN SPORTS	3A30214009209517	0618	TEAM HOODIE TEES -	0.00	160.00
7101	1020565	10/09/26	57106	BSN SPORTS	3A30214009209510	0618	BASKETBALL TEAM JER	0.00	208.00
7101	1020565	10/09/26	57106	BSN SPORTS	3A30214009209510	0618	BASKETBALL TEAM SHO	0.00	468.00
7101	1020565	10/09/26	57106	BSN SPORTS	3A30214009209510	0618	BASKETBALL TEAM JER	0.00	208.00
7101	1020565	10/09/26	57106	BSN SPORTS	3A30214009209510	0618	BASKETBALL TEAM SHO	0.00	468.00
7101	1020565	10/09/26	57106	BSN SPORTS	3A30214009209510	0618	FREIGHT	0.00	108.16
7101	1020565	10/09/26	57106	BSN SPORTS	3A30214009209517	0618	TEAM HOODIE TEES -	0.00	160.00
7101	1020565	10/09/26	57106	BSN SPORTS	3A30214009209517	0618	TEAM HOODIE TEES -	0.00	200.00
7101	1020565	10/09/26	57106	BSN SPORTS	3A30214009209517	0618	TEAM HOODIE TEES -	0.00	200.00
7101	1020565	10/09/26	57106	BSN SPORTS	3A30214009209517	0618	TEAM HOODIE TEES -	0.00	160.00
7101	1020565	10/09/26	57106	BSN SPORTS	3A30214009209517	0618	TEAM HOODIE TEES -	0.00	120.00
7101	1020565	10/09/26	57106	BSN SPORTS	3A30214009209517	0618	FREIGHT	0.00	150.00
7101	1020565	10/09/26	57106	BSN SPORTS	3A30214009209509	0618	BASKETBALLS 29.5"	0.00	1,260.00
7101	1020565	10/09/26	57106	BSN SPORTS	3A30214009209511	0618	BASKETBALLS 28.5"	0.00	1,260.00
7101	1020565	10/09/26	57106	BSN SPORTS	3A30214009209509	0618	FREIGHT	0.00	126.00
7101	1020565	10/09/26	57106	BSN SPORTS	3A30214009209511	0618	FREIGHT	0.00	126.00
TOTAL CHECK								0.00	6,082.16
7101	1020566	10/09/26	03217	CHESTERMAN CO.	3A30214009209646	0618	OLSEN CONCESSION	0.00	2,292.96
7101	1020567	10/09/26	03260	CITY OF SIOUX CITY	3A30221329209518	0347	EH VS ANKENY 9/25	0.00	475.00
7101	1020567	10/09/26	03260	CITY OF SIOUX CITY	3A30221329209518	0347	EH VS HEELAN 9/11	0.00	537.50
TOTAL CHECK								0.00	1,012.50
7101	1020568	10/09/26	600815	COACHCOMM, LLC	3A30214009209518	0618	FOOTBALL SUPPLIES	0.00	2,385.00
7101	1020569	10/09/26	04295	DON'S PRO SHOP	3A30214009209518	0618	EH FBALL PLAQUES	0.00	783.00
7101	1020570	10/09/26	09256	IOWA HIGH SCHOOL AT	3A30214009209508	0618	EH BBALL PLAQUES	0.00	100.00
7101	1020570	10/09/26	09256	IOWA HIGH SCHOOL AT	3A30214009109565	0815	9/30 STUCO STU ENTR	0.00	100.00
TOTAL CHECK								0.00	200.00
7101	1020571	10/09/26	13429	RAY'S MIDBELL MUSIC	3A30214009109504	0618	BAND SUPPLIES	0.00	47.98
7101	1020571	10/09/26	13429	RAY'S MIDBELL MUSIC	3A30214009109504	0618	BAND PARTS	0.00	27.99
TOTAL CHECK								0.00	75.97

SELECTION CRITERIA: transact.account<'8000' and transact.ck_date between '20261009' and '20261021'
ACCOUNTING PERIOD: 4/27

FUND - 3A - EAST HIGH ACTIVITY FUND

CASH ACCT	CHECK NO	ISSUE DT	VENDOR	NAME	ORGANIZATION	ACCNT	----DESCRIPTION----	SALES TAX	AMOUNT
7101	1020572	10/09/26	164051	PREMIUM FOOD & BEVE	3A30214009209646	0618	OLSEN CONCESSION ES	0.00	572.08
7101	1020572	10/09/26	164051	PREMIUM FOOD & BEVE	3A30214009209646	0618	OLSEN CONCESSION ES	0.00	2,230.60
7101	1020572	10/09/26	164051	PREMIUM FOOD & BEVE	3A30214009209646	0618	OLSEN CONCESSION ES	0.00	3,046.08
7101	1020572	10/09/26	164051	PREMIUM FOOD & BEVE	3A30214009209646	0618	OLSEN CONCESSION ES	0.00	5,194.00
7101	1020572	10/09/26	164051	PREMIUM FOOD & BEVE	3A30214009209554	0618	EH CONCESSIONS	0.00	575.46
7101	1020572	10/09/26	164051	PREMIUM FOOD & BEVE	3A30214009209554	0618	EH CONCESSIONS	0.00	393.29
TOTAL CHECK								0.00	12,011.51
7101	1020594	10/16/26	02565	BUSH DRY CLEANERS &	3A30224100009056	0349	HOCO TIE/JACKET	0.00	42.00
7101	1020594	10/16/26	02565	BUSH DRY CLEANERS &	3A30224100009056	0349	EH HOCO TIE/JACKET	0.00	75.50
7101	1020594	10/16/26	02565	BUSH DRY CLEANERS &	3A30224100009056	0349	EH HOCO TIE/JACKET	0.00	97.00
TOTAL CHECK								0.00	214.50
7101	1020595	10/16/26	03217	CHESTERMAN CO.	3A30214009209646	0618	OLSEN CONCESS PO228	0.00	834.42
7101	1020596	10/16/26	600511	GRAFFIX, INC.	3A30214009109600	0618	EH DANCE CLINIC TEE	0.00	1,262.25
7101	1020597	10/16/26	09247	IOWA GIRLS COACHES	3A30214009209630	0811	EH 26-27 IGCA MBRSH	0.00	125.00
7101	1020598	10/16/26	09021	ISDTA	3A30214009109600	0815	EHS STATE SOLO 10/2	0.00	650.00
7101	1020599	10/16/26	58178	JULIAN C HANSEN	3A30226609209518	0349	EH 9/25 FB SECURITY	0.00	225.00
7101	1020600	10/16/26	57601	CAROLINA SNYDER	3A30226609209518	0349	EH 10/9 VFB SECURIT	0.00	225.00
7101	1020601	10/16/26	24027	VC CRAZY BOUNCE HOU	3A30214009109600	0442	EH DANCE RENTAL	0.00	370.00
7101	1020602	10/16/26	600437	WESTERN CHRISTIAN H	3A30214009209541	0815	EH 10/10 VBALL ENTR	0.00	225.00
7101	V1000409	10/14/26	52103	DESIREE ANN SHULTZ	3A30224100009056	0618	REIMBUR CLASS ROOM	0.00	8.99
7101	V1000409	10/14/26	52103	DESIREE ANN SHULTZ	3A30224100009056	0618	REIMBUR CLASS ROOM	0.00	22.99
TOTAL CHECK								0.00	31.98
7101	V1000410	10/21/26	02042	KEITH BAKER	3A30214009209518	0345	EH 10/9 VFB OFFICIA	0.00	145.00
7101	V1000411	10/21/26	54465	ROBERT BOWMAN	3A30214009209518	0345	EH 10/8 FFB OFFICIA	0.00	100.00
7101	V1000412	10/21/26	51910	AARON CHRISTIANS	3A30214009209518	0345	EH JV 10/5 OFFICIAL	0.00	80.00
7101	V1000413	10/21/26	08315	TERRANCE R COMSTOCK	3A30214009209518	0345	EH JV 10/5 OFFICIAL	0.00	80.00
7101	V1000414	10/21/26	600578	BLAKE JOHNSON	3A30214009209518	0345	EH 10/9 VFB OFFICIA	0.00	145.00
7101	V1000415	10/21/26	50739	BRETT JOHNSON	3A30214009209518	0345	EH 10/9 VFB OFFICIA	0.00	145.00
7101	V1000416	10/21/26	10110	DWAYNE JOHNSON	3A30214009209518	0345	EH 10/9 VFB OFFICIA	0.00	145.00
7101	V1000417	10/21/26	53872	GREG KIRWAN	3A30214009209518	0345	EH 10/9 VFB OFFICIA	0.00	145.00
7101	V1000417	10/21/26	53872	GREG KIRWAN	3A30214009209518	0345	EH 10/8 FFB OFFICIA	0.00	100.00
7101	V1000417	10/21/26	53872	GREG KIRWAN	3A30214009209518	0345	EH JV 10/5 OFFICIAL	0.00	80.00

SELECTION CRITERIA: transact.account<'8000' and transact.ck_date between '20261009' and '20261021'
ACCOUNTING PERIOD: 4/27

FUND - 3A - EAST HIGH ACTIVITY FUND

CASH ACCT	CHECK NO	ISSUE DT	VENDOR	NAME	ORGANIZATION	ACCNT	----DESCRIPTION----	SALES TAX	AMOUNT
7101	V1000417	10/21/26	53872	GREG KIRWAN	3A30214009209518	0345	EH JVF 10/12 OFFICI	0.00	80.00
TOTAL CHECK								0.00	405.00
7101	V1000418	10/21/26	56803	SEAN MENDLIK	3A30226609209518	0349	EH 10/9 VFB SECURIT	0.00	225.00
7101	V1000419	10/21/26	600169	JEFF W NELSON	3A30214009209518	0345	EH JVF 10/12 OFFICI	0.00	80.00
7101	V1000419	10/21/26	600169	JEFF W NELSON	3A30214009209518	0345	EH JV 10/5 OFFICIAL	0.00	80.00
TOTAL CHECK								0.00	160.00
7101	V1000420	10/21/26	55294	OSCAR NORDSTROM	3A30214009209518	0345	EH 10/8 FFB OFFICIA	0.00	100.00
7101	V1000421	10/21/26	50725	COREY WESTRA	3A30214009209518	0345	EH 10/9 VFB ANNOUNC	0.00	50.00
TOTAL CASH ACCOUNT								0.00	32,421.25
TOTAL FUND								0.00	32,421.25

SELECTION CRITERIA: transact.account<'8000' and transact.ck_date between '20261009' and '20261021'
ACCOUNTING PERIOD: 4/27

FUND - 3B - NORTH HIGH ACTIVITY FUND

CASH ACCT	CHECK NO	ISSUE DT	VENDOR	NAME	ORGANIZATION	ACCNT	----DESCRIPTION----	SALES TAX	AMOUNT
7101	1020573	10/09/26	03260	CITY OF SIOUX CITY	3B30521329209518	0347	NORTH V WEST 9/10/2	0.00	475.00
7101	1020573	10/09/26	03260	CITY OF SIOUX CITY	3B30521329209518	0347	NORTH V DM LINCO 9/	0.00	475.00
TOTAL CHECK								0.00	950.00
7101	1020574	10/09/26	600511	GRAFFIX, INC.	3B30514009209548	0618	NHS CHEER SHIRTS	0.00	784.50
7101	1020574	10/09/26	600511	GRAFFIX, INC.	3B30514009209514	0618	NHS XC LS SHIRTS	0.00	822.50
TOTAL CHECK								0.00	1,607.00
7101	1020575	10/09/26	13429	RAY'S MIDBELL MUSIC	3B30514009109504	0618	NHS BAND LOOP STRAP	0.00	15.99
7101	1020575	10/09/26	13429	RAY'S MIDBELL MUSIC	3B30514009109504	0618	NHS BAND STAND W/BA	0.00	53.99
7101	1020575	10/09/26	13429	RAY'S MIDBELL MUSIC	3B30514009109504	0618	NHS BAND SUPPLIES	0.00	242.69
7101	1020575	10/09/26	13429	RAY'S MIDBELL MUSIC	3B30514009109504	0618	NHS BAND BAR CHIME	0.00	249.99
7101	1020575	10/09/26	13429	RAY'S MIDBELL MUSIC	3B30514009109504	0618	NHS BAND FLEX A TON	0.00	85.98
7101	1020575	10/09/26	13429	RAY'S MIDBELL MUSIC	3B30514009109504	0618	NHS BAND BATTER HEA	0.00	90.80
TOTAL CHECK								0.00	739.44
7101	1020576	10/09/26	21158	URBANDALE HIGH SCHO	3B30514009209541	0815	NHS VB 10/3 ENTRY	0.00	150.00
7101	1020603	10/16/26	012152	AMAZON CAPITAL SERV	3B30524100009056	0618	PROSTART SUPPLIES	0.00	97.64
7101	1020604	10/16/26	19274	SERGEANT BLUFF-LUTO	3B30514009209541	0815	NHS VB 10/12 ENTRY	0.00	70.00
7101	1020605	10/16/26	600437	WESTERN CHRISTIAN H	3B30514009209541	0815	NHS VB 10/10 ENTRY	0.00	225.00
7101	1020606	10/16/26	58195	WILLOW CREEK GOLF C	3B30514009209519	0815	NHS GOLF RANGE BALL	0.00	30.00
7101	1020606	10/16/26	58195	WILLOW CREEK GOLF C	3B30514009209519	0815	NHS GOLF ENTRY 10/5	0.00	90.00
TOTAL CHECK								0.00	120.00
7101	1020607	10/16/26	601131	WORLD'S FINEST CHOC	3B30514009209522	0618	NHS GOLF FR CHOCOLA	0.00	1,080.00
7101	V1000406	10/14/26	04021	TRACEY BADAR	3B30514009209518	0345	NHS FB 10/2 REEF VA	0.00	145.00
7101	V1000406	10/14/26	04021	TRACEY BADAR	3B30514009209518	0345	NHS FB 10/1 REF	0.00	80.00
TOTAL CHECK								0.00	225.00
7101	V1000407	10/14/26	02126	RON BEALS	3B30514009209518	0345	NHS FB 10/2 REF VAR	0.00	145.00
7101	V1000408	10/14/26	100902	ANDREW JINDRA	3B30526609209518	0349	NHS FB 10/2 OFFICER	0.00	225.00
7101	V1000408	10/14/26	100902	ANDREW JINDRA	3B30526609109565	0349	NHS 9/25 DANCE POLI	0.00	337.50
TOTAL CHECK								0.00	562.50
7101	V1000409	10/14/26	55827	BRANDON KAMERMAN	3B30514009209518	0345	NHS FB 10/2 REF VAR	0.00	145.00
7101	V1000410	10/14/26	53872	GREG KIRWAN	3B30514009209518	0345	NHS FB 10/1 REF	0.00	80.00
7101	V1000411	10/14/26	55294	OSCAR NORDSTROM	3B30514009209518	0345	NHS FB 10/5 REF	0.00	80.00
7101	V1000412	10/14/26	56153	STANTON SCHAUFF	3B30514009209518	0345	NHS FB 10/5 REF	0.00	80.00
7101	V1000412	10/14/26	56153	STANTON SCHAUFF	3B30514009209518	0345	NHS FB 10/1 REF	0.00	80.00
TOTAL CHECK								0.00	160.00
7101	V1000413	10/14/26	600002	JASON SLAUGHTER	3B30514009209518	0345	NHS FB 10/2 REF VAR	0.00	145.00

SELECTION CRITERIA: transact.account<'8000' and transact.ck_date between '20261009' and '20261021'
ACCOUNTING PERIOD: 4/27

FUND - 3B - NORTH HIGH ACTIVITY FUND

CASH ACCT	CHECK NO	ISSUE DT	VENDOR	NAME	ORGANIZATION	ACCNT	----DESCRIPTION----	SALES TAX	AMOUNT
7101	V1000414	10/14/26	53021	RAYMOND SPIER	3B30514009209518	0345	NHS FB 10/1 REF	0.00	80.00
7101	V1000415	10/14/26	57525	SHAWN STRICKLETT	3B30514009209518	0345	NHS FB 10/2 REF VAR	0.00	145.00
7101	V1000416	10/21/26	600914	KEVIN EEKHOFF	3B30514009209518	0345	NHS FB 10/12 JV REF	0.00	80.00
7101	V1000417	10/21/26	55294	OSCAR NORDSTROM	3B30514009209518	0345	NHS FB 10/12 JV REF	0.00	80.00
TOTAL CASH ACCOUNT								0.00	6,966.58
TOTAL FUND								0.00	6,966.58

SELECTION CRITERIA: transact.account<'8000' and transact.ck_date between '20261009' and '20261021'
ACCOUNTING PERIOD: 4/27

FUND - 3C - WEST HIGH ACTIVITY FUND

CASH ACCT	CHECK NO	ISSUE DT	VENDOR	NAME	ORGANIZATION	ACCNT	----DESCRIPTION----	SALES TAX	AMOUNT
7101	1020577	10/09/26	55868	ABANTE MARKETING, A	3C30614009209532	0618	STUDENT PANTS (SWIM	0.00	512.00
7101	1020577	10/09/26	55868	ABANTE MARKETING, A	3C30614009209532	0618	JACKETS FOR SWIM TE	0.00	962.00
TOTAL CHECK								0.00	1,474.00
7101	1020578	10/09/26	03217	CHESTERMAN CO.	3C30614009209554	0618	WHS CONCESSION SUPP	0.00	68.32
7101	1020579	10/09/26	03260	CITY OF SIOUX CITY	3C30621329209518	0347	WHS V EHS 9/18/26	0.00	475.00
7101	1020580	10/09/26	07267	GAME ONE	3C30614009109570	0618	CHOIR POLOS	0.00	1,162.27
7101	1020581	10/09/26	09021	ISDTA	3C30614009109557	0815	WHS 2027 TEAM ENTRY	0.00	834.00
7101	1020582	10/09/26	164051	PREMIUM FOOD & BEVE	3C30614009209554	0618	WHS CONCESSION SUPP	0.00	170.04
7101	1020582	10/09/26	164051	PREMIUM FOOD & BEVE	3C30614009209554	0618	WHS CONCESSION SUPP	0.00	208.00
7101	1020582	10/09/26	164051	PREMIUM FOOD & BEVE	3C30614009209554	0618	WHS CONCESSION SUPP	0.00	105.00
TOTAL CHECK								0.00	483.04
7101	1020583	10/09/26	600922	RIVERSIDE TECHNOLOG	3C30614009209517	0618	PANTS FOR SENIORS	0.00	470.00
7101	1020608	10/16/26	012152	AMAZON CAPITAL SERV	3C30622220009055	0618	IPAD WALL MOUNT	0.00	139.98
7101	1020609	10/16/26	600511	GRAFFIX, INC.	3C30614009209510	0618	WHS EMBROIDERY LOGO	0.00	469.00
7101	1020610	10/16/26	11146	KINGSLEY-PIERSON CO	3C30614009209513	0815	CR CNTRY INVITATION	0.00	125.00
7101	1020611	10/16/26	600922	RIVERSIDE TECHNOLOG	3C30614009209517	0618	WHS TEAM HOODIES	0.00	2,260.00
7101	1020612	10/16/26	19546	SIOUXLAND SCALE SER	3C30626409209502	0433	WRESTLE SCALE TEST	0.00	100.00
7101	V1000403	10/14/26	10110	DWAYNE JOHNSON	3C30614009209518	0345	WHS FBALL OFFICIAL	0.00	80.00
7101	V1000404	10/14/26	53021	RAYMOND SPIER	3C30614009209518	0345	WHS FBALL OFFICIAL	0.00	80.00
7101	V1000405	10/14/26	58126	JEFF TENNAPEL	3C30614009209518	0345	WHS FBALL OFFICIAL	0.00	145.00
7101	V1000406	10/14/26	58139	NATHAN ALAN VOS	3C30614009209518	0345	WHS FBALL OFFICIAL	0.00	145.00
7101	V1000407	10/21/26	600914	KEVIN EEKHOFF	3C30614009209518	0345	WHS FBALL OFFICIAL	0.00	80.00
7101	V1000408	10/21/26	56240	MARK FEINER	3C30614009209518	0345	WHS JV FBALL OFFICI	0.00	100.00
7101	V1000408	10/21/26	56240	MARK FEINER	3C30614009209518	0345	WHS FBALL OFFICIAL	0.00	145.00
TOTAL CHECK								0.00	245.00
7101	V1000409	10/21/26	56223	JUSTIN FURGASON	3C30626609209518	0349	WHS FBALL SECURITY	0.00	262.50
7101	V1000410	10/21/26	55810	GERRY SEAVEY	3C30614009209518	0345	WHS FBALL OFFICIAL	0.00	80.00
7101	V1000411	10/21/26	56614	TYSON LUND	3C30626409109553	0433	WHS PIANO TUNING	0.00	280.00
7101	V1000412	10/21/26	55294	OSCAR NORDSTROM	3C30614009209518	0345	WHS FB OFFICIAL	0.00	80.00

SELECTION CRITERIA: transact.account<'8000' and transact.ck_date between '20261009' and '20261021'
ACCOUNTING PERIOD: 4/27

FUND - 3C - WEST HIGH ACTIVITY FUND

CASH ACCT	CHECK NO	ISSUE DT	VENDOR	NAME	ORGANIZATION	ACCNT	----DESCRIPTION----	SALES TAX	AMOUNT
7101	V1000413	10/21/26	56153	STANTON SCHAUFF	3C30614009209518	0345	WHS FBALL OFFICIAL	0.00	100.00
7101	V1000414	10/21/26	57465	BRIAN SMITH	3C30626609209518	0349	WHS FBALL SECURITY	0.00	262.50
7101	V1000415	10/21/26	53021	RAYMOND SPIER	3C30614009209518	0345	WHS FBALL OFFICIAL	0.00	145.00
7101	V1000416	10/21/26	600020	SCOTT WILLMOTT	3C30614009209518	0345	WHS FBALL OFFICIAL	0.00	145.00
7101	V1000417	10/21/26	25024	MATTHEW R YOUNG	3C30614009209518	0345	WHS FBALL OFFICIAL	0.00	145.00
7101	V1000418	10/21/26	56949	DOUGLAS ZAHNLEY	3C30614009209518	0345	WHS FBALL OFFICIAL	0.00	145.00
TOTAL CASH ACCOUNT								0.00	10,480.61
TOTAL FUND								0.00	10,480.61

SELECTION CRITERIA: transact.account<'8000' and transact.ck_date between '20261009' and '20261021'
ACCOUNTING PERIOD: 4/27

FUND - 3D - CAREER ACADEMY

CASH ACCT	CHECK NO	ISSUE DT	VENDOR	NAME	ORGANIZATION	ACCNT	----DESCRIPTION----	SALES TAX	AMOUNT
7101	1020613	10/16/26	012152	AMAZON CAPITAL SERV	3D30011003809606	0612	TEA LIGHTS / USB PO	0.00	44.39
TOTAL CASH ACCOUNT								0.00	44.39
TOTAL FUND								0.00	44.39

SELECTION CRITERIA: transact.account<'8000' and transact.ck_date between '20261009' and '20261021'
ACCOUNTING PERIOD: 4/27

FUND - 61 - NUTRITION FUND

CASH ACCT	CHECK NO	ISSUE DT	VENDOR	NAME	ORGANIZATION	ACCNT	----DESCRIPTION----	SALES TAX	AMOUNT
7101	299682	10/09/26	601393	BEN STAR PACKAGING	6100031100000000	0618	OTHER GEN SUPPLIES	0.00	580.50
7101	299683	10/09/26	040101	DACOTAH PAPER CO	6100031100000000	0618	OTHER GEN SUPPLIES	0.00	107.44
7101	299684	10/09/26	01276	EAKES OFFICE PLUS	6100031100000000	0618	OTHER GEN SUPPLIES	0.00	1,336.40
7101	299686	10/09/26	07320	GREENBERG FRUIT COM	6100031100000000	0633	PRODUCE	0.00	4,079.72
7101	299686	10/09/26	07320	GREENBERG FRUIT COM	6100031100000000	0633	PRODUCE	0.00	4,233.64
7101	299686	10/09/26	07320	GREENBERG FRUIT COM	6100031100000000	0633	PRODUCE	0.00	2,749.45
7101	299686	10/09/26	07320	GREENBERG FRUIT COM	6100031100000000	0633	PRODUCE	0.00	6,156.62
TOTAL CHECK								0.00	17,219.43
7101	299687	10/09/26	08473	HUBERT COMPANY	6100031100000000	0618	OTHER GEN SUPPLIES	0.00	2,161.68
7101	299688	10/09/26	12534	LOFFREDO FRESH PROD	6100031100000000	0633	PRODUCE	0.00	826.50
7101	299688	10/09/26	12534	LOFFREDO FRESH PROD	6100031100000000	0633	PRODUCE	0.00	2,542.85
TOTAL CHECK								0.00	3,369.35
7101	299689	10/09/26	13120	MARTIN BROS DISTRIB	6100031100000000	0631	DAIRY	0.00	147.32
7101	299689	10/09/26	13120	MARTIN BROS DISTRIB	6100031100000000	0634	MEAT	0.00	2,029.40
7101	299689	10/09/26	13120	MARTIN BROS DISTRIB	6100031100000000	0632	GROCERIES	0.00	2,405.00
7101	299689	10/09/26	13120	MARTIN BROS DISTRIB	6100031100000000	0632	GROCERIES	0.00	2,453.44
7101	299689	10/09/26	13120	MARTIN BROS DISTRIB	6100031100000000	0631	DAIRY	0.00	600.40
7101	299689	10/09/26	13120	MARTIN BROS DISTRIB	6100031100000000	0636	BREAD	0.00	7,422.67
7101	299689	10/09/26	13120	MARTIN BROS DISTRIB	6100031100000000	0632	GROCERIES	0.00	10,031.46
7101	299689	10/09/26	13120	MARTIN BROS DISTRIB	6100031100000000	0634	MEAT	0.00	13,421.47
7101	299689	10/09/26	13120	MARTIN BROS DISTRIB	6100031100000000	0634	MEAT	0.00	13,643.93
7101	299689	10/09/26	13120	MARTIN BROS DISTRIB	6100031100001621	0631	ALACARTE	0.00	289.86
7101	299689	10/09/26	13120	MARTIN BROS DISTRIB	6100031100000000	0632	GROCERIES	0.00	5,109.44
7101	299689	10/09/26	13120	MARTIN BROS DISTRIB	6100031100000000	0634	MEAT	0.00	5,340.00
7101	299689	10/09/26	13120	MARTIN BROS DISTRIB	6100031100001621	0631	ALACARTE	0.00	363.50
7101	299689	10/09/26	13120	MARTIN BROS DISTRIB	6100031100000000	0631	DAIRY	0.00	124.86
TOTAL CHECK								0.00	63,382.75
7101	299690	10/09/26	12464	NIPPON SANSO MATHES	6100031100000000	0618	OTHER GEN SUPPLIES	0.00	45.00
7101	299691	10/09/26	01065	REFRIGERATION ENGIN	6121126400000000	0433	EQUIP SERVICES	0.00	476.33
7101	299691	10/09/26	01065	REFRIGERATION ENGIN	6100031100000000	0618	OTHER GEN SUPPLIES	0.00	100.00
7101	299691	10/09/26	01065	REFRIGERATION ENGIN	6121126400000000	0433	EQUIP SERVICES	0.00	657.28
7101	299691	10/09/26	01065	REFRIGERATION ENGIN	6115526400000000	0433	EQUIP SERVICES	0.00	123.50
7101	299691	10/09/26	01065	REFRIGERATION ENGIN	6122026400000000	0433	EQUIP SERVICES	0.00	123.50
TOTAL CHECK								0.00	1,480.61
7101	299692	10/09/26	56250	RION EQUIPMENT	6107126400000000	0433	EQUIP SERVICES	0.00	522.10
7101	299692	10/09/26	56250	RION EQUIPMENT	6107126400000000	0433	EQUIP SERVICES	0.00	1,613.82
TOTAL CHECK								0.00	2,135.92
7101	299693	10/09/26	600710	SCCSD FOOD SERVICE-	6100031100000000	0631	8/21 FAREWAY	0.00	6.10
7101	299693	10/09/26	600710	SCCSD FOOD SERVICE-	6100031100000000	0618	9/22 WALMART	0.00	6.44
7101	299693	10/09/26	600710	SCCSD FOOD SERVICE-	6100031100000000	0632	8/25 WALMART	0.00	29.97
TOTAL CHECK								0.00	42.51

SELECTION CRITERIA: transact.account<'8000' and transact.ck_date between '20261009' and '20261021'
ACCOUNTING PERIOD: 4/27

FUND - 61 - NUTRITION FUND

CASH ACCT	CHECK NO	ISSUE DT	VENDOR	NAME	ORGANIZATION	ACCNT	----DESCRIPTION----	SALES TAX	AMOUNT
7101	299694	10/09/26	56637	VESTIS SERVICES, LL	6100031100000000	0618	OTHER GEN SUPPLIES	0.00	30.76
7101	299694	10/09/26	56637	VESTIS SERVICES, LL	6100031100000000	0618	OTHER GEN SUPPLIES	0.00	35.38
7101	299694	10/09/26	56637	VESTIS SERVICES, LL	6100031100000000	0618	OTHER GEN SUPPLIES	0.00	70.00
7101	299694	10/09/26	56637	VESTIS SERVICES, LL	6100031100000000	0618	OTHER GEN SUPPLIES	0.00	70.64
7101	299694	10/09/26	56637	VESTIS SERVICES, LL	6100031100000000	0618	OTHER GEN SUPPLIES	0.00	72.55
7101	299694	10/09/26	56637	VESTIS SERVICES, LL	6100031100000000	0618	OTHER GEN SUPPLIES	0.00	75.70
7101	299694	10/09/26	56637	VESTIS SERVICES, LL	6100031100000000	0618	OTHER GEN SUPPLIES	0.00	57.95
7101	299694	10/09/26	56637	VESTIS SERVICES, LL	6100031100000000	0618	OTHER GEN SUPPLIES	0.00	60.99
7101	299694	10/09/26	56637	VESTIS SERVICES, LL	6100031100000000	0618	OTHER GEN SUPPLIES	0.00	62.92
7101	299694	10/09/26	56637	VESTIS SERVICES, LL	6100031100000000	0618	OTHER GEN SUPPLIES	0.00	55.98
7101	299694	10/09/26	56637	VESTIS SERVICES, LL	6100031100000000	0618	OTHER GEN SUPPLIES	0.00	50.71
7101	299694	10/09/26	56637	VESTIS SERVICES, LL	6100031100000000	0618	OTHER GEN SUPPLIES	0.00	44.79
7101	299694	10/09/26	56637	VESTIS SERVICES, LL	6100031100000000	0618	OTHER GEN SUPPLIES	0.00	43.83
7101	299694	10/09/26	56637	VESTIS SERVICES, LL	6100031100000000	0618	OTHER GEN SUPPLIES	0.00	35.50
7101	299694	10/09/26	56637	VESTIS SERVICES, LL	6100031100000000	0618	OTHER GEN SUPPLIES	0.00	35.85
7101	299694	10/09/26	56637	VESTIS SERVICES, LL	6100031100000000	0618	OTHER GEN SUPPLIES	0.00	42.83
7101	299694	10/09/26	56637	VESTIS SERVICES, LL	6100031100000000	0618	OTHER GEN SUPPLIES	0.00	42.91
7101	299694	10/09/26	56637	VESTIS SERVICES, LL	6100031100000000	0618	OTHER GEN SUPPLIES	0.00	29.63
7101	299694	10/09/26	56637	VESTIS SERVICES, LL	6100031100000000	0618	OTHER GEN SUPPLIES	0.00	89.40
7101	299694	10/09/26	56637	VESTIS SERVICES, LL	6100031100000000	0618	OTHER GEN SUPPLIES	0.00	110.19
TOTAL CHECK								0.00	1,118.51
7101	299783	10/16/26	601393	BEN STAR PACKAGING	6100031100000000	0618	OTHER GEN SUPPLIES	0.00	666.08
7101	299784	10/16/26	56252	CASH-WA DISTR. CO.	6100031100000000	0618	OTHER GEN SUPPLIES	0.00	1,343.85
7101	299784	10/16/26	56252	CASH-WA DISTR. CO.	6100031100000000	0618	CREDIT REFUND	0.00	-121.20
TOTAL CHECK								0.00	1,222.65
7101	299785	10/16/26	03217	CHESTERMAN CO.	6100031100001621	0631	ALACART CREDIT REFU	0.00	-103.40
7101	299785	10/16/26	03217	CHESTERMAN CO.	6100031100001621	0631	ALACART CREDIT REFU	0.00	-70.50
7101	299785	10/16/26	03217	CHESTERMAN CO.	6100031100001621	0631	ALACART CREDIT REFU	0.00	-140.40
7101	299785	10/16/26	03217	CHESTERMAN CO.	6100031100001621	0631	ALACART CREDIT REFU	0.00	-268.32
7101	299785	10/16/26	03217	CHESTERMAN CO.	6100031100001621	0631	ALACARTE	0.00	113.80
7101	299785	10/16/26	03217	CHESTERMAN CO.	6100031100001621	0631	ALACARTE	0.00	134.03
7101	299785	10/16/26	03217	CHESTERMAN CO.	6100031100001621	0631	ALACARTE	0.00	93.57
7101	299785	10/16/26	03217	CHESTERMAN CO.	6100031100001621	0631	ALACARTE	0.00	1,583.25
7101	299785	10/16/26	03217	CHESTERMAN CO.	6100031100001621	0631	ALACARTE	0.00	911.68
7101	299785	10/16/26	03217	CHESTERMAN CO.	6100031100001621	0631	ALACARTE	0.00	1,069.30
7101	299785	10/16/26	03217	CHESTERMAN CO.	6100031100001621	0631	ALACARTE	0.00	433.98
7101	299785	10/16/26	03217	CHESTERMAN CO.	6100031100001621	0631	ALACARTE	0.00	349.34
7101	299785	10/16/26	03217	CHESTERMAN CO.	6100031100001621	0631	ALACARTE	0.00	329.20
7101	299785	10/16/26	03217	CHESTERMAN CO.	6100031100001621	0631	ALACARTE	0.00	266.18
7101	299785	10/16/26	03217	CHESTERMAN CO.	6100031100001621	0631	ALACARTE	0.00	231.53
7101	299785	10/16/26	03217	CHESTERMAN CO.	6100031100001621	0631	ALACARTE	0.00	156.81
7101	299785	10/16/26	03217	CHESTERMAN CO.	6100031100001621	0631	ALACARTE	0.00	166.91
7101	299785	10/16/26	03217	CHESTERMAN CO.	6100031100001621	0631	ALACARTE	0.00	166.91
7101	299785	10/16/26	03217	CHESTERMAN CO.	6100031100001621	0631	ALACARTE	0.00	190.93
7101	299785	10/16/26	03217	CHESTERMAN CO.	6100031100001621	0631	ALACARTE	0.00	194.72
7101	299785	10/16/26	03217	CHESTERMAN CO.	6100031100001621	0631	ALACARTE	0.00	154.26
TOTAL CHECK								0.00	5,963.78

SELECTION CRITERIA: transact.account<'8000' and transact.ck_date between '20261009' and '20261021'
ACCOUNTING PERIOD: 4/27

FUND - 61 - NUTRITION FUND

CASH ACCT	CHECK NO	ISSUE DT	VENDOR	NAME	ORGANIZATION	ACCNT	----DESCRIPTION----	SALES TAX	AMOUNT
7101	299786	10/16/26	54930	COLE PAPERS INC	6100031100000000	0618	OTHER GEN SUPPLIES	0.00	518.72
7101	299786	10/16/26	54930	COLE PAPERS INC	6100031100000000	0618	OTHER GEN SUPPLIES	0.00	1,884.00
7101	299786	10/16/26	54930	COLE PAPERS INC	6100031100000000	0618	OTHER GEN SUPPLIES	0.00	3,500.53
7101	299786	10/16/26	54930	COLE PAPERS INC	6100031100000000	0618	OTHER GEN SUPPLIES	0.00	3,462.76
7101	299786	10/16/26	54930	COLE PAPERS INC	6100031100000000	0618	OTHER GEN SUPPLIES	0.00	135.30
7101	299786	10/16/26	54930	COLE PAPERS INC	6100031100000000	0618	OTHER GEN SUPPLIES	0.00	44.99
TOTAL CHECK								0.00	9,546.30
7101	299787	10/16/26	040101	DACOTAH PAPER CO	6100031100000000	0618	OTHER GEN SUPPLIES	0.00	426.24
7101	299788	10/16/26	58184	DESCON	6100031100000000	0618	OTHER GEN SUPPLIES	0.00	264.00
7101	299789	10/16/26	01276	EAKES OFFICE PLUS	6100031100000000	0618	OTHER GEN SUPPLIES	0.00	898.30
7101	299790	10/16/26	56207	EAST SIDE JERSEY DA	6100031100000000	0631	DAIRY	0.00	55,985.83
7101	299791	10/16/26	07320	GREENBERG FRUIT COM	6100031100000000	0633	PRODUCE	0.00	7,948.41
7101	299791	10/16/26	07320	GREENBERG FRUIT COM	6100031100000000	0633	PRODUCE	0.00	938.73
7101	299791	10/16/26	07320	GREENBERG FRUIT COM	6100031100000000	0633	PRODUCE	0.00	1,959.51
7101	299791	10/16/26	07320	GREENBERG FRUIT COM	6100031100000000	0633	PRODUCE	0.00	7,361.85
7101	299791	10/16/26	07320	GREENBERG FRUIT COM	6100031100000000	0633	PRODUCE	0.00	5,888.71
TOTAL CHECK								0.00	24,097.21
7101	299800	10/16/26	12534	LOFFREDO FRESH PROD	6100031100000000	0633	PRODUCE	0.00	1,167.70
7101	299800	10/16/26	12534	LOFFREDO FRESH PROD	6100031100000000	0633	PRODUCE	0.00	667.70
TOTAL CHECK								0.00	1,835.40
7101	299812	10/16/26	13120	MARTIN BROS DISTRIB	6100031100000000	0631	DAIRY	0.00	992.25
7101	299812	10/16/26	13120	MARTIN BROS DISTRIB	6100031100001621	0631	ALACARTE	0.00	2,006.99
7101	299812	10/16/26	13120	MARTIN BROS DISTRIB	6100031100000000	0634	MEAT	0.00	4,308.29
7101	299812	10/16/26	13120	MARTIN BROS DISTRIB	6100031100000000	0636	BREAD	0.00	4,369.20
7101	299812	10/16/26	13120	MARTIN BROS DISTRIB	6100031100000000	0632	GROCERIES	0.00	9,424.32
7101	299812	10/16/26	13120	MARTIN BROS DISTRIB	6100031100000000	0632	GROCERIES	0.00	16,245.07
7101	299812	10/16/26	13120	MARTIN BROS DISTRIB	6100031100000000	0634	MEAT	0.00	224.58
7101	299812	10/16/26	13120	MARTIN BROS DISTRIB	6100031100001621	0631	ALACARTE	0.00	390.56
7101	299812	10/16/26	13120	MARTIN BROS DISTRIB	6100031100000000	0631	DAIRY	0.00	58.46
7101	299812	10/16/26	13120	MARTIN BROS DISTRIB	6100031100000000	0634	MEAT	0.00	4.70
TOTAL CHECK								0.00	38,024.42
7101	299827	10/16/26	01065	REFRIGERATION ENGIN	6115626400000000	0433	EQUIP SERVICES	0.00	123.50
7101	299827	10/16/26	01065	REFRIGERATION ENGIN	6121726400000000	0433	EQUIP SERVICES	0.00	452.46
7101	299827	10/16/26	01065	REFRIGERATION ENGIN	6115226400000000	0433	EQUIP SERVICES	0.00	262.00
TOTAL CHECK								0.00	837.96
7101	299850	10/16/26	56637	VESTIS SERVICES, LL	6100031100000000	0618	OTHER GEN SUPPLIES	0.00	70.00
7101	299850	10/16/26	56637	VESTIS SERVICES, LL	6100031100000000	0618	OTHER GEN SUPPLIES	0.00	31.05
7101	299850	10/16/26	56637	VESTIS SERVICES, LL	6100031100000000	0618	OTHER GEN SUPPLIES	0.00	31.97
7101	299850	10/16/26	56637	VESTIS SERVICES, LL	6100031100000000	0618	OTHER GEN SUPPLIES	0.00	34.67
7101	299850	10/16/26	56637	VESTIS SERVICES, LL	6100031100000000	0618	OTHER GEN SUPPLIES	0.00	35.50
7101	299850	10/16/26	56637	VESTIS SERVICES, LL	6100031100000000	0618	OTHER GEN SUPPLIES	0.00	27.49

SELECTION CRITERIA: transact.account<'8000' and transact.ck_date between '20261009' and '20261021'
ACCOUNTING PERIOD: 4/27

FUND - 61 - NUTRITION FUND

CASH ACCT	CHECK NO	ISSUE DT	VENDOR	NAME	ORGANIZATION	ACCNT	----DESCRIPTION----	SALES TAX	AMOUNT
7101	299850	10/16/26	56637	VESTIS SERVICES, LL	6100031100000000	0618	OTHER GEN SUPPLIES	0.00	58.64
7101	299850	10/16/26	56637	VESTIS SERVICES, LL	6100031100000000	0618	OTHER GEN SUPPLIES	0.00	60.99
7101	299850	10/16/26	56637	VESTIS SERVICES, LL	6100031100000000	0618	OTHER GEN SUPPLIES	0.00	66.36
7101	299850	10/16/26	56637	VESTIS SERVICES, LL	6100031100000000	0618	OTHER GEN SUPPLIES	0.00	55.98
7101	299850	10/16/26	56637	VESTIS SERVICES, LL	6100031100000000	0618	OTHER GEN SUPPLIES	0.00	50.66
7101	299850	10/16/26	56637	VESTIS SERVICES, LL	6100031100000000	0618	OTHER GEN SUPPLIES	0.00	49.58
7101	299850	10/16/26	56637	VESTIS SERVICES, LL	6100031100000000	0618	OTHER GEN SUPPLIES	0.00	39.84
7101	299850	10/16/26	56637	VESTIS SERVICES, LL	6100031100000000	0618	OTHER GEN SUPPLIES	0.00	42.91
7101	299850	10/16/26	56637	VESTIS SERVICES, LL	6100031100000000	0618	OTHER GEN SUPPLIES	0.00	44.24
7101	299850	10/16/26	56637	VESTIS SERVICES, LL	6100031100000000	0618	OTHER GEN SUPPLIES	0.00	85.39
7101	299850	10/16/26	56637	VESTIS SERVICES, LL	6100031100000000	0618	OTHER GEN SUPPLIES	0.00	81.37
7101	299850	10/16/26	56637	VESTIS SERVICES, LL	6100031100000000	0618	OTHER GEN SUPPLIES	0.00	81.37
7101	299850	10/16/26	56637	VESTIS SERVICES, LL	6100031100000000	0618	OTHER GEN SUPPLIES	0.00	75.70
7101	299850	10/16/26	56637	VESTIS SERVICES, LL	6100031100000000	0618	OTHER GEN SUPPLIES	0.00	57.95
TOTAL CHECK								0.00	1,081.66
TOTAL CASH ACCOUNT								0.00	233,829.93
TOTAL FUND								0.00	233,829.93
TOTAL REPORT								0.00	1,611,574.07

Sioux City Community School District
Credit Card Totals by Cardholder
September Transactions Paid in October

		Amount
ELEMENTARY SCHOOLS:		
BRYANT		$ 470.83
Hunt		429.00
IRVING		1,194.91
LEEDS		620.48
LIBERTY		4,915.03
LOESS HILLS		1,488.16
MORNINGSIDE		1,481.99
NODLAND		1,414.00
PERRY CREEK		2,956.60
RIVERSIDE		506.93
SPALDING PARK		3,027.11
UNITY		230.00
MIDDLE SCHOOLS:		
EAST MIDDLE		141.50
EAST MIDDLE	2	3,282.48
NORTH MIDDLE		7,660.61
WEST MIDDLE		4,185.62
HIGH SCHOOLS:		
CAREER	ACADEMY	903.42
CONSTRUCTION	ACADEMY	1,669.56
EAST	HIGH 1	4,878.29
EAST HIGH	ACTIVITY 2	2,590.93
EAST HIGH	ACTIVITY 3	5,417.82
EAST HIGH	CTE	1,595.08
NORTH HIGH	ACTIVITY	1,237.37
NORTH HIGH	ACTIVITY 2	2,924.20
NORTH HIGH	ACTIVITY 3	3,064.03
NORTH HIGH	ACTIVITY 4	1,196.44
NORTH HIGH	CTE	1,304.06
WEST HIGH	ACTIVITY 2	4,297.14
WEST HIGH	ACTIVITY 3	4,137.67
WEST HIGH	1	2,890.91
WEST HIGH	CTE	2,156.00
KIMBERLY	NEAL	19,392.43
JOHN	VANDERLOO	1,470.74
HUMAN	RESOURCES	1,038.24
DISTRICT	CIA 1	2,206.81
DISTRICT	COMMUNICATIONS	597.87

DISTRICT	CTE	14,483.83
ESC	CTE	151.83
OFFICE	BUSINESS	2,540.55
STUDENT	SERVICES	6.37
DISTRICT	PRESCHOOL	49.87
ASSOCIATE	SUPERINTENDENT	103.94
DISTRICT	SUPERINTENDENT 1	468.61
DIRECTOR	SECONDARY ED	1,072.63
DEPARTMENT	TECHNOLOGY	1,505.13
MUSIC	COORDINATOR	60.00
PE	COORDINATOR	1,308.49
STEM	COORDINATOR	8,820.93
AUTO	MECHANICS	113.58
OPERATIONS AND MAINTENANCE:		
JAY	BARTO	62.30
DUANE	BATES	150.50
JODI	BILLIET	727.36
JOSEPH	BISENIUS	771.07
PHILIP	CHOQUETTE	1,509.34
MICHAEL	HINRICHSEN	73.98
DARWIN	KLUENDER	99.96
JAMES	KNOWLES	454.72
COURTNEY	LAHRS	343.31
RICH	LUZE	1,560.37
WESLEY	MYERS	51.96
ANDREW	NIELAND	44.97
CORAL	OLSON	522.75
MICHAEL	PRASTER	532.53
DOUG	STEWART	284.47
AUSTIN	STUSSE	24.19
HEATH	VANROEKEL	374.74
STEVE	WARREN	20.06
EDGAR CHACON	ZAVALA	592.89
TOTAL		**$ 137,861.49**

Sioux City Community School District

Date: October 26, 2026
To: Jim Vanderloo, Interim Superintendent
From: Patty Blankenship, Director of Finance/CFO
RE: Approval of Expenditures

Recommendation: That the Board approves the following expenditures:

Check registers	**$**	**1,611,574.07**
Wells Fargo September (credit card)	**$**	**137,861.49**
Total	**$**	**1,749,435.56**

Expenditures by Fund:	Date		Amount
General Fund			
Check register	10/9/2026	$	748,637.44
Check register	10/16/2026	$	294,253.14
		$	1,042,890.58
Wells Fargo September (credit card)		$	85,108.49
		$	1,127,999.07
Sales Tax Fund			
Check register	10/9/2026	$	153,278.10
Check register	10/16/2026	$	70,298.91
		$	223,577.01
Phys Plant & Equip Fund			
Check register	10/9/2026	$	49,500.00
Wells Fargo September (credit card)		$	400.61
		$	49,900.61
School Nutrition Fund			
Check register	10/9/2026	$	92,980.10
Check register	10/16/2026	$	140,849.83
		$	233,829.93
Wells Fargo September (credit card)		$	1,493.25
		$	235,323.18
Activity Fund			
Check register	10/9/2026	$	38,510.61
Check register	10/16/2026	$	23,265.94

	$	61,776.55
Wells Fargo September (credit card)	$	50,859.14
	$	112,635.69

Total All Funds	**$**	**1,749,435.56**

Check		
check register	$	-
credit card	$	-
payroll	$	-
total	$	-

Sioux City Community School District
Executive Summary
Level I Investigators
October 26, 2026

Purpose:

To provide the Sioux City School Board of Directors with information regarding the trained Level I Investigators that can respond to allegations of abuse of students by school employees and volunteers.

Explanation:

Contact: Barbara Caskey (712) 279-6692
Zarah Simpson (712) 279-6692 x6159

Iowa school districts are required to investigate formal complaints regarding abuse of students by school employees and volunteers, even after the Department of Health and Human Services (HHS) dismisses or deems the allegation unfounded. An investigation is required when the allegations may constitute a violation of District policy and/or may result in the suspension or revocation of the professional license of the accused individual. The District appoints Level 1 investigators to fulfill this obligation. It is the job of these Investigators to determine whether a violation of those policies or regulations has occurred. All principals and assistant principals are relied upon to conduct such investigations in their buildings, and may be appointed by the Director of Student Services to do investigations in other buildings as needed.

Each year we identify multiple individuals who will be trained and who can perform Level I investigations. The following individual is currently trained as a Level I Investigator:

Zarah Simpson Compliance Coordinator

In addition, all elementary and secondary principals and assistant principals are required to complete the Level I Investigator training. They will be relied upon to conduct investigations in their buildings, as well as other buildings as needed.

Impact on Student Achievement:

Level I Investigators assist our schools in maintaining a safe environment for all students.

Funding Source:

N/A

Recommendation:

That the Board of Directors approves the Level I Investigators for the District for the 2026-2027 school year.

Level I Abuse Investigators
2026-2027

Any person who has knowledge of an incident of abuse of a student by a school employee should make a report to any of the individuals in the positions noted below.

Compliance Coordinator
(712) 279-6692
X6159

Director of Human Resources
(712) 279-6692

Elementary School Principals or Assistant Principals

Bryant Elementary School
(712) 279-6819

Clark Early Childhood Center
(712) 239-7030

Hunt Elementary School
(712) 279-6833

Irving Dual Language Elementary School
(712) 279-6834

Leeds Elementary School
(712) 239-7034

Liberty Elementary School
(712) 279-6845

Loess Hills Elementary School
(712) 279-6843

Morningside Elementary School
(712) 274-4048

Nodland Elementary School
(712) 274-4044

Perry Creek Elementary School
(712) 279-6836

Riverside Elementary School
(712) 279-6811

Spalding Park Elementary School
(712) 274-4043

Sunnyside Elementary School
(712) 274-4047

Unity Elementary School
(712) 279-6839

Middle School Principals or Assistant Principals

East Middle (712) 274-4030

North Middle (712) 279-6804

West Middle (712) 279-6813

High School Principals or Assistant Principals

East High (712) 274-4000

North High (712) 239-7000

West High (712) 279-6772

Career Academy
(712) 279-6668

If you have any questions, please contact any of the individuals in the positions listed above or refer to School Board Policy 405.10—Allegations of Abuse by Employee.

SIOUX CITY COMMUNITY SCHOOL DISTRICT
CERTIFIED ADMINISTRATOR EARLY RETIREMENT PLAN

Purpose

It is the expressed intent of the Board, through this plan, to provide qualifying District administrators with the option for early retirement from their employment with the District. This plan is designed to show the District's appreciation for the services an administrator has rendered to the District as well as maximize use of District funds through replacement savings to avoid involuntary staff reductions. Thus, there are advantages to both an administrator and the District in the adoption of such plan.

Participation in this plan is voluntary. It is the current intent of the Board to provide this incentive only for the 2026-2027 school year with the understanding that the Board may or may not offer an additional early retirement plan in the future.

Statement of Non-Discrimination

The School District will not discriminate against any employee on the basis of age, sex, sexual orientation, race, color, creed, religion, national origin, disability or any other protected class under state or federal law through the application or administration of this plan.

Eligibility

An administrator is eligible for early retirement under this plan if he/she (i) is a regular full-time administrator, licensed as an administrator and employed by the District pursuant to a 279 administrator contract; (ii) has completed at least 30 years of total service in the District at the time of retirement; and (iii) is at least 55 years of age at the time of retirement. Early retirement is not available to any administrator who is under consideration of contract termination, or has been discharged for cause.

Application Procedure

An application for early retirement by an eligible administrator will be considered by the Board for approval if received by the Board Secretary not later than ___:___ p.m. on _____, 202_. Application materials must include the following completed items:

1. Exhibit A: Resignation and Request for Retirement
2. Exhibit B: Release of Claims
3. Exhibit C: Agreement Not to Apply for Reemployment (this does not prohibit the District from offering employment in the future)

An administrator's application for early retirement is not, in itself, a resignation of employment with the District nor does it require the Board to accept the application. However, approval by the Board of an administrator's application for early retirement will be considered a voluntary resignation of employment and termination of contract.

Retirement Incentive

Upon retirement, an administrator will be allowed to continue participation in the District's group health insurance plan for retiree coverage, at the District's expense, provided that the administrator meets all requirements of the insurer and applicable law. This insurance coverage will cease when the retiree becomes eligible for Medicare, secures other employment in which

the employer provides insurance coverage, or dies. Notwithstanding the foregoing, the Board reserves the right to change insurance carriers and modify or eliminate group health plan coverage. This plan in no way guarantees that the retiree will be provided any certain level of benefits during the time of the retirement incentive.

Miscellaneous

The Board is the final arbiter of all interpretation under this plan including, but not limited to, questions regarding eligibility and benefit calculation.

The Board reserves the right to waive any requirement or condition of this plan at its discretion and at any time. Any decision by the Board to waive a requirement or condition which is a part of this plan shall not establish any precedent with regard to any other request for a waiver.

The adoption of this plan shall not vest any right in any employee whether or not the employee is currently eligible for early retirement. The Board has the complete discretion to amend or repeal this plan or any provisions thereof at any time, with or without notice, and is not obligated to provide any benefits after the date of such amendment or repeal, except to an administrator whose early retirement pursuant to this plan has commenced prior to such amendment or repeal.

Should any portion of this plan be in conflict with state or federal law, that portion of the plan shall be invalid and all other portions shall remain in full force and effect.

Eligible administrators are advised to seek independent advice with regard to tax or financial consequences associated with any action taken by them under this plan.

Exhibit A

RESIGNATION AND REQUEST FOR EARLY RETIREMENT

I, _____, hereby submit my resignation to the Board of Directors of the Sioux City Community School District, effective June 30, 2027, and request the early retirement incentive available under the plan for eligible administrators in the District. This resignation is subject to the Board's approval of my request to participate in the early retirement plan.

I attest that my age as of the date of retirement will be 55 or over, and that my years of service to the District as of the date of retirement will be _____ or over.

Employee Printed Full Name _____

Employee Signature _____ Date _____

For Office Use Only

The above-stated resignation and request for early retirement was accepted and approved by the Board on the _____day of _____, 202_, by action as noted in the meeting minutes of the Board.

_____
Secretary of Board of Directors
Sioux City Community School District

Exhibit B

RELEASE OF CLAIMS

I, _____ ("Administrator"), hereby agree as follows:

1. In consideration of the incentive to be provided to me in accordance with my participation in the Sioux City Community School District's early retirement plan, I agree to immediately sign and submit a resignation from District employment to be effective on June 30, 2027.

2. I hereby release and discharge the District, its Board of Directors, and its officers, employees, agents, or representatives from any and all liability whatsoever including all demands, claims, or causes of action which I have or may ever claim to have by reason of my employment with the District and the termination of my employment relationship with the District, and specifically waive any rights or claims which I may have or ever claim to have arising under the Age Discrimination in Employment Act of 1967 (29 U.S.C. Sec 621, et seq.), excluding any claims which may arise after the date of the signing of this Agreement.

3. I acknowledge that I received a copy of this agreement and was given up to forty-five (45) days to consider it. I understand that, following the date of the signing of this agreement, I have seven (7) days to revoke it and that this agreement shall not be effective until such seven (7) day period has expired.

4. I acknowledge that I have the right to consult with an attorney prior to signing this agreement.

5. I confirm that this agreement is entered into freely and voluntarily and solely in reliance upon my own knowledge, belief, and judgment, and not upon representations made by the District or others on its behalf.

Signed:_____

_____, Administrator

Date:_____

Exhibit C

AGREEMENT NOT TO APPLY FOR REEMPLOYMENT

In consideration of the incentive to be provided to me in accordance with my participation in the Sioux City Community School District's early retirement plan, I hereby agree not to apply for or seek reemployment with the District at any time in the future. It is understood that this agreement does not apply if the District were to elect to offer employment to me in the future.

Signed:_____

_____, Administrator

Date:_____

Sioux City Community School District Human Resources Staffing Report
School Board Meeting: October 26, 2026
Barb Caskey, Director of Human Resources

1. New Position(s)				
Number	**Facility**	**Position**	**Comments**	**Funding Source**
2	North High School	SpEd Instructional Assistant	Students' Need	Special Education
1	West High School	SpEd Instructional Assistant	Student's Need	Special Education
1	North Middle School	SpEd Instructional Assistant	Students' Need	Special Education
1	North Middle School	Middle School Wrestling Coach	Due to increased #'s	General Fund
1	West Middle School	SpEd Instructional Assistant	Students' Need	Special Education
1	Liberty Elementary School	SpEd Instructional Assistant	Students' Need	Special Education
1	Loess Hills Elementary School	SpEd Instructional Assistant	Students' Need	Special Education
1	Morningside Elementary School	SpEd Instructional Assistant	Students' Need	Special Education
1	Spalding Park Elementary School	SpEd Instructional Assistant	Students' Need	Special Education
1	Transportation	Transportation Specialist II	Restructuring Position from Salaried Associate to ESSP 12- Month Hourly with Grandfathered Benefits.	General Fund

Sioux City Community School District Human Resources Staffing Report
School Board Meeting: October 26, 2026
Barb Caskey, Director of Human Resources

4. New Hire(s) / Coaching					
Name	**Facility**	**Position**	**Salary**	**Effective Date**	**Comments**
Lewis, Kyle	East Middle School	Middle School Wrestling Coach	$2,044	November 2, 2026	N/A
Wilson, Cole	East High School	Basketball Coach Boys (9th Grade)	$3,735	November 16, 2026	N/A
Worden, Troy	West Middle School	Wrestling Coach, Girls	$2,044	November 2, 2026	N/A

Sioux City Community School District Human Resources Staffing Report
School Board Meeting: October 26, 2026
Barb Caskey, Director of Human Resources

5. New Hire(s) / Classified							
Name	**Facility**	**Position**	**Salary**	**Effective Date**	**Education**	**Prior Employment**	**Comments**
Boeshart, Rebecca	Unity Elementary School	SpEd Instructional Assistant	$20.83	November 2, 2026	BS from Wayne State College	Opportunities Unlimited, Direct Support Professional	Contingent Upon Meeting Pre-Employment Requirements.
Galvan, Mireya	Hunt Elementary School	SpEd Instructional Assistant	$19.88	November 2, 2026	BA from University ICEL	Laboratorios Polanco, Medical Representative	Contingent Upon Meeting Pre-Employment Requirements.
Gonzalez, Alejandra	Irving Elementary School	SpEd Instructional Assistant	$17.48	November 2, 2026	High School Diploma	Casa de Paz, Dietary Aide	Contingent Upon Meeting Pre-Employment Requirements.
Husted, Brooklynn	North Middle School	SpEd Instructional Assistant	$19.88	November 2, 2026	High School Diploma	Dairy Queen, Front Counter	Contingent Upon Meeting Pre-Employment Requirements.
Lesline, Robert	Transportation	Bus Assistant	$16.88	November 2, 2026	High School Diploma	Sioux City Community School District, Substitute Bus Assistant	Contingent Upon Meeting Pre-Employment Requirements.
Ramirez, Faviola	Bryant Elementary School	SpEd Instructional Assistant	$17.48	November 2, 2026	High School Diploma	Sioux City Community School District, Food Service	Contingent Upon Meeting Pre-Employment Requirements.
Rowland, Shanna	Spalding Park Elementary School	SpEd Instructional Assistant	$19.88	November 2, 2026	AS from Des Moines Area Community College	Boys and Girls Home, Mental Health Technician	Contingent Upon Meeting Pre-Employment Requirements.
Stewart, Ashlea	Irving Elementary School	SpEd Instructional Assistant	$21.88	November 2, 2026	High School Diploma	UnityPoint Health, Patient Access	Contingent Upon Meeting Pre-Employment Requirements.
Stewart, Kelsee	Morningside Elementary School	SpEd Instructional Assistant	$17.48	November 2, 2026	High School Diploma	HuHot Mongolian Grill, Server	Contingent Upon Meeting Pre-Employment Requirements.
Strawn, Ben	Operations & Maintenance	Auto Mechanic	$31.84	November 2, 2026	Trade School	Liquid Trucking, Diesel Mechanic	Contingent Upon Meeting Pre-Employment Requirements.
Waldman, Haylee	Morningside Elementary School	SpEd Instructional Assistant	$17.73	November 2, 2026	High School Diploma	Mid-Step Services, Direct Support Professional	New Position Board Approved October 26, 2026. Contingent Upon Meeting Pre-Employment Requirements.

Sioux City Community School District Human Resources Staffing Report
School Board Meeting: October 26, 2026
Barb Caskey, Director of Human Resources

7. 2026-2027 Food Service New Hires/Changes in Salaries						
Name	**Facility**	**Previous Position**	**New Position**	**Hourly Rate**	**Bonus**	**Additional Benefits**
Hansen, Vicki	District Wide	Substitute Food Service Worker	Secondary Permanent Travel	$19.23	N/A	N/A

Sioux City Community School District Human Resources Staffing Report
School Board Meeting: October 26, 2026
Barb Caskey, Director of Human Resources

10. 2026-2027 Support Staff Changes						
Name	**Facility**	**Previous Position**	**New Position**	**Salary/Hourly Rate**	**Bonus**	**Additional Benefits/Comments**
Chacon Zavala, Edgar	Operations & Maintenance	Maintenance Mechanic I	Maintenance Mechanic II	$29.76	N/A	Step 2 Correction
Choquette, Colton	Operations & Maintenance	Maintenance Mechanic I	Maintenance Mechanic II	$29.76	N/A	Step 2 Advancement
Peterson, Lisa	Transportation	Transportation Specialist II	Transportation Specialist II	$30.03	N/A	Transitioning from Associate Professional to ESSP Hourly
Sheets, Rebecca	Educational Service Center	N/A	N/A	$65,912	N/A	Supervisory Role Added
Teel, Brenyn	Morningside Elementary School	SpEd 1:1 Resource Instructional Assistant	SpEd VBC Instructional Assistant	$19.88	N/A	Additional $3.00 for VBC

Sioux City Community School District Human Resources Staffing Report
School Board Meeting: October 26, 2026
Barb Caskey, Director of Human Resources

13. Resignation(s) / Coaching				
Name	**Facility**	**Position**	**Effective Date**	**Comments**
Cotter, Benjamin	West High School	Play (HS) Advisor	August 25, 2026	Failure to Commence Employment
Downing, Ava	East High School	Debate/Speech Coach, Assistant	October 1, 2026	N/A

Sioux City Community School District Human Resources Staffing Report
School Board Meeting: October 26, 2026
Barb Caskey, Director of Human Resources

14. Resignation(s) / Classified					
Name	**Facility**	**Position**	**Years**	**Effective Date**	**Comments**
Arias, Araceli	Spalding Park Elementary School	SpEd Instructional Assistant	1	October 12, 2026	N/A
Calvillo, Thomas	Transportation	Bus Assistant	0	October 19, 2026	Failure to Commence Employment
Claussen, Elexis	North High School	Building Office Assistant	1	October 30, 2026	N/A
Fickett, Shelby	Educational Service Center	Administrative Assistant	5	January 29, 2027	N/A
Ly, Alexandria	North High School	Bookkeeper	3	October 28, 2026	N/A
Sanchez, Alicia	Career Academy	SpEd Instructional Assistant	1	October 28, 2026	N/A
Sands, Sarah	West High School	10 Month Secretary	5	October 22, 2026	N/A
Saunders, Peyton	Sunnyside Elementary School	Building Office Assistant	3	November 2, 2026	N/A

Sioux City Community School District Human Resources Staffing Report
School Board Meeting: October 26, 2026
Barb Caskey, Director of Human Resources

19. Retirement(s) / Certified					
Name	**Facility**	**Position**	**Years**	**Effective Date**	**Comments**
Nieuwendorp, Jody	Hunt/Leeds Elementary School	Traveling Elementary Music Teacher	13	May 27, 2027	N/A

Sioux City Community School District Human Resources Staffing Report
School Board Meeting: October 26, 2026
Barb Caskey, Director of Human Resources

23. Leave of Absence			
Name	**Facility**	**Position**	**Comments**
Gorsett, Shawn	Clark Early Childhood Center	Certified Teacher	Medical Leave of Absence November 1, 2026 - June 30, 2027

Certified FTE Openings as of 10/21/26

Elementary	
Classroom	1
Special Ed	0
ELL	0
Administration	0
Counselor	0
Nurse	0
Vocal/Band	0
Title	0
Teacher Leader	0
Total	1

Middle	
Classroom	0
Special Ed	5.5
ELL	0
Administration	0
Counselor	0
Nurse	0
Vocal/Band	0
Title	0
Teacher Leader	0
Total	5.5

High	
Classroom	3
Special Ed	5.5
ELL	0
Administration	1
Counselor	0
Nurse	0
Vocal/Band	0
Title	0
Teacher Leader	2
Total	11.5

Classified FTE Openings as of 10/21/26

Transportation	1.9
Food Service	11.6
O & M	4
ESSP	2
Asst Prof	0
Secretary	0
IA Elementary	18.7
Total	48.3

IA Middle	0.8

Cabinet	*1*
IA High	9.3

Sioux City Community School District
Executive Summary
AESA (Association of Educational Service Agencies)
October 26, 2026

Purpose:

AESA will provide agency recruitment efforts for the Director of Operations and Maintenance open position.

Explanation: Contact: Barb Caskey (712) 279-6692

The contract with AESA would begin in November and includes a proposed timeline for recruitment and candidate selection with three different site visits from the agency.

The Recruitment search aligns with other tactics that will be executed as part of the District's recruitment and retention strategies.

The total cost of the contract with AESA is $19,500.

Impact on Student Achievement:

The recruitment of top talent is vital to providing students with a quality education. Engaged and motivated team members are more likely to innovate, inspire, and connect with students which supports academic success.

Funding Source:

General Fund

Priority:

Staff Recruitment and Retention

Recommendation:

That the Board of Directors approves the contract with AESA for $19,500.

AESA
ASSOCIATION OF EDUCATIONAL SERVICE AGENCIES

DIRECTOR OF OPERATIONS AND MAINTENANCE SEARCH PROPOSAL

October 13, 2026

Presented To

SIOUX CITY COMMUNITY SCHOOL DISTRICT

Presented By

JEREMY KOVASH
AESA EXECUTIVE SEARCH CONSULTANT

218-205-8203 jkovash@aesa.us www.aesa.us

AESA
ASSOCIATION OF EDUCATIONAL SERVICE AGENCIES

PO Box 404
Cheshire, CT 06410
(715) 966-1688
https://www.aesa.us/

Our Approach

The Association of Educational Service Agencies (AESA) is pleased to offer executive search services to Sioux City Community School District for the recruitment and selection of its next Director of Operations and Maintenance. As a national organization with an extensive network of educational service agencies and partners, AESA can support a broad search or a more geographically focused recruitment effort, based on the district's preferences.

AESA will collaborate with Iowa's Area Education Agencies (AEAs), district networks, and other professional partners to identify qualified candidates. The board of directors will direct the search, establish its priorities and timeline, and make all selection decisions. AESA will facilitate a transparent, organized process consistent with applicable Iowa requirements and district policies.

Proposed Search Process

The following process is flexible and may be customized in consultation with the district and its board of education.

Site Visit #1 | Planning and Recruitment

- Meet with the board and designated district leadership to establish the desired experience, competencies, and leadership characteristics for the Director of Operations and Maintenance. Confirm that the district owns the process and may adjust the timeline and approach as needed.
- Establish the schedule for subsequent meetings, candidate review, interviews, and selection.
- Meet with administrators or other stakeholder groups identified by the district.
- Review and refine the position description, qualifications, and recruitment materials.
- Advertise through AESA, Iowa AEA networks, district channels, and additional statewide or national partners as appropriate.
- Coordinate the application intake process with the district, including procedures for confidentiality and record management.
- Review applications and conduct preliminary reference inquiries and appropriate background research for leading candidates, consistent with applicable law and district authorization.

Site Visit #2 | Candidate Review and Interview Preparation

- Provide the board and designated district representatives with candidate application materials and a summary of relevant screening information. Conduct additional follow-up on other candidates identified for consideration.
- Facilitate the selection of candidates to interview.
- Develop consistent, position-specific interview questions, assign interviewer roles, and establish interview procedures and evaluation criteria. Provide guidance on lawful and appropriate interview practices.

Site Visit #3 | Interviews and Selection

- Facilitate candidate interviews according to the agreed schedule and procedures.
- Support final interviews, candidate deliberations, and the district's selection decision.
- Provide assistance with offer and contract discussions, if requested.

AESA
ASSOCIATION OF EDUCATIONAL SERVICE AGENCIES

PO Box 404
Cheshire, CT 06410
(715) 966-1688
https://www.aesa.us/

Proposed Timeline

All dates are preliminary and may be adjusted by Sioux City Community School District.

November 16, 2026	**Site Visit #1: search planning and position profile**
November 23, 2026	Vacancy posted through AESA, AEA, District, and selected partner networks
December 31, 2026	Application deadline
January 11, 2027	**Site Visit #2: candidate review and interview planning; additional reference and background follow-up as appropriate**
February 1, 2027	**Site Visit #3: interviews and candidate selection**
February 15, 2027	Anticipated contract approval
Spring/Summer 2027 (TBD)	Anticipated start date

Professional Fee

Total fixed fee: $19,500, inclusive of travel, three site visits and related search expenses.

- $10,000 — Upon execution of the agreement
- $6,000 — Following candidate interviews
- $3,500 — Following approval of the selected candidate's contract

Professional References

John Bass | Former COO and AESA Executive Search Consultant | (806) 290-3092

Doug Huebsch | Chair, University of Minnesota Board of Regents | (218) 849-0843

Dr. Leigh Ann Putman | Executive Director, Metro Georgia Regional Educational Service Agency | (770) 630-6097

Kirk Schneidawind | Executive Director, Minnesota School Boards Association | (507) 382-7942

Dr. Dan Schnoes | Chief Executive Officer, ESU #3, La Vista, Nebraska | (402) 719-8181

Dr. Tamara Uselman | Former Superintendent, Bismarck, North Dakota | (701) 527-4610

AESA
ASSOCIATION OF EDUCATIONAL SERVICE AGENCIES

PO Box 404
Cheshire, CT 06410
(715) 966-1688
https://www.aesa.us/

AESA Search Consultant | Jeremy Kovash



Jeremy Kovash
40766 N. Marion Drive
Perham, MN
jkovash@aesa.us
218-205-8203

Jeremy Kovash is the Executive Director of Lakes Country Service Cooperative (LCSC).

At Lakes Country, his work provides regional support to schools, cities, counties, nonprofits, and other government agencies in west central Minnesota. Originally from Moorhead, Kovash earned his bachelor's degree from Concordia College and his master's degree and superintendent's licensure from Minnesota State University Moorhead. Prior to joining LCSC, Kovash taught Psychology, Political Science, and History, and served as a school administrator.

Kovash has served on the boards of directors of the Minnesota Rural Educators Association (MREA), the United Way, and the Perham Hospital Board and Foundation. He currently serves on the boards of directors for the Minnesota Healthcare Consortium (MHC), United Community Bank, the Concordia College National Alumni Board, the Minnesota Association of School Administrators (MASA), and the Association of Educational Service Agencies (AESA), where he served as President in 2025. He is the Legislative Chairperson for The Minnesota Service Cooperatives, was identified as a Humphrey Policy Fellow by the University of Minnesota and has earned several awards for leadership and service.

Kovash has professional experience and expertise in organizational leadership and development. He chairs and facilitates searches for professional organizations, schools, government and non-profit.

Kovash lives near Perham, MN, and enjoys traveling, reading, and spending time with his wife, Deanna, and three adult sons on Marion Lake.

Sioux City Community School District
Executive Summary
Distribution of Education Support Personnel State Funding
October 26, 2026

Purpose:

Distribution of the Education Support Personnel State Funding.

Explanation: **Contact:** Jim Vanderloo (712) 279-6643

The District's Education Support Personnel State Funding for 2026-2027 is $210,904. The funding is for hourly staff. The Administration is proposing to distribute the funds using the same method as in prior year.

• Hire date 7-1-26 and after	$75	115 employees *(estimated)*
• Hire date 7-1-21 to 6-30-26	$150	515 employees *(estimated)*
• Hire date before 7-1-21	$333 *(estimated)*	330 employees *(estimated*)

Total estimated hourly employees are 960.

Impact on Student Achievement:

N/A

Funding Source:

Educational Support Personnel State Funding (state aid)

Priority:

Staff Recruitment and Retention

Recommendation:

That the Board of Directors approves the method of distribution of the Education Support Personnel State Funding.

Sioux City Community School District
Executive Summary
Title 1 Update
October 26, 2026

Purpose:
To provide stakeholders with an update on the District's Title 1 budget

Explanation: **Contact:** Jarod Mozer (712) 279-6677

The Sioux City Community School District has received an allocation for Title 1 of $5,016,996.12 for FY27. Additionally, the district also has a current carryover of $752,734.58. This money will be used primarily for staffing (i.e. – retain effective staff members). However, this money also is used for specific purposes and services such as parental involvement, homeless support, and interventions/supplemental materials as explained in the presentation.

Impact on Student Achievement:

This funding is used to provide support for schools with high percentages of students from low-income families to help ensure that all students meet challenging state academic standards. This support is primarily provided in the form of staffing. Support is being provided at 10 elementary buildings, 3 middle school buildings, and 2 high school buildings.

Funding Source:

Title 1A

Priority:

Student Achievement/ Continuous Academic Improvement for All Students

Recommendation:

That the Board of Directors acknowledges the Title 1A budget update.

Title IA Annual Update 2026

Jarod Mozer,
Director of Elementary Education

Sioux City Community Schools
believe... achieve... succeed

Presentation Overview

- Title I History
- Title I Schools
- Budget

Title I, Part A of the Elementary and Secondary Education Act:

- Title I, Part A (Title I) of the Elementary and Secondary Education Act, as amended (ESEA) provides financial assistance to local educational agencies (LEAs) and schools with high numbers or high percentages of children from low-income families to help ensure that all children meet challenging state academic standards."

- (U.S. Department of Education, 2015)

Serving Buildings

- Must serve buildings over 75% free & reduced
- May serve buildings over 35% free & reduced
- We serve all buildings that are above 65% free & reduced over a two year period

Sioux City Community Schools
believe... achieve... succeed

SCCSD Title I Schools

- Bryant
- Irving
- Hunt
- Liberty
- Leeds
- Loess Hills
- Morningside
- Riverside
- Spalding Park
- Unity
- East Middle
- North Middle
- West Middle
- North High
- West High

Sioux City Community Schools
believe... achieve... succeed

Title I Funds Support Additional Schools:

- Bishop Heelan Catholic Schools
- St. Paul's Lutheran School
- Siouxland Christian
- Boys and Girls Home and Family Services
- Rosecrance-Jackson Recovery

Program Components:

- Funding for reading and math interventionists at 10 elementary buildings, 3 middle school buildings, and two high school buildings to serve students at risk of not meeting local, state, and federal standards in reading and math (53 teachers total)
- Educational activities and informational events to increase parental involvement in learning.
- Implementation of research-based interventions and supplemental materials to promote student achievement.
- Support for qualifying students that attend nonpublic schools.

Sioux City Community Schools
believe... achieve... succeed

Title I Budget:

The Title I Allocation was $5,016,996.12 for FY27 (down from last year's amount of $5,137,707)

This is a $120,710 decrease from FY26

Additionally, carryover was 15% which was $752,734.38 (total is $5,769,730.50)

Information to Know Related to Allocation:



Last year we carried over $752,734.38 (right at the 15% threshold)



Our current allocation was $5,016,996.12. Salaries and benefits for FY27 are projected at $4,967,034.10



Due to this, it will not be possible to carryover the maximum 15% for FY27 (looking at 10%).

Sioux City Community Schools
believe... achieve... succeed

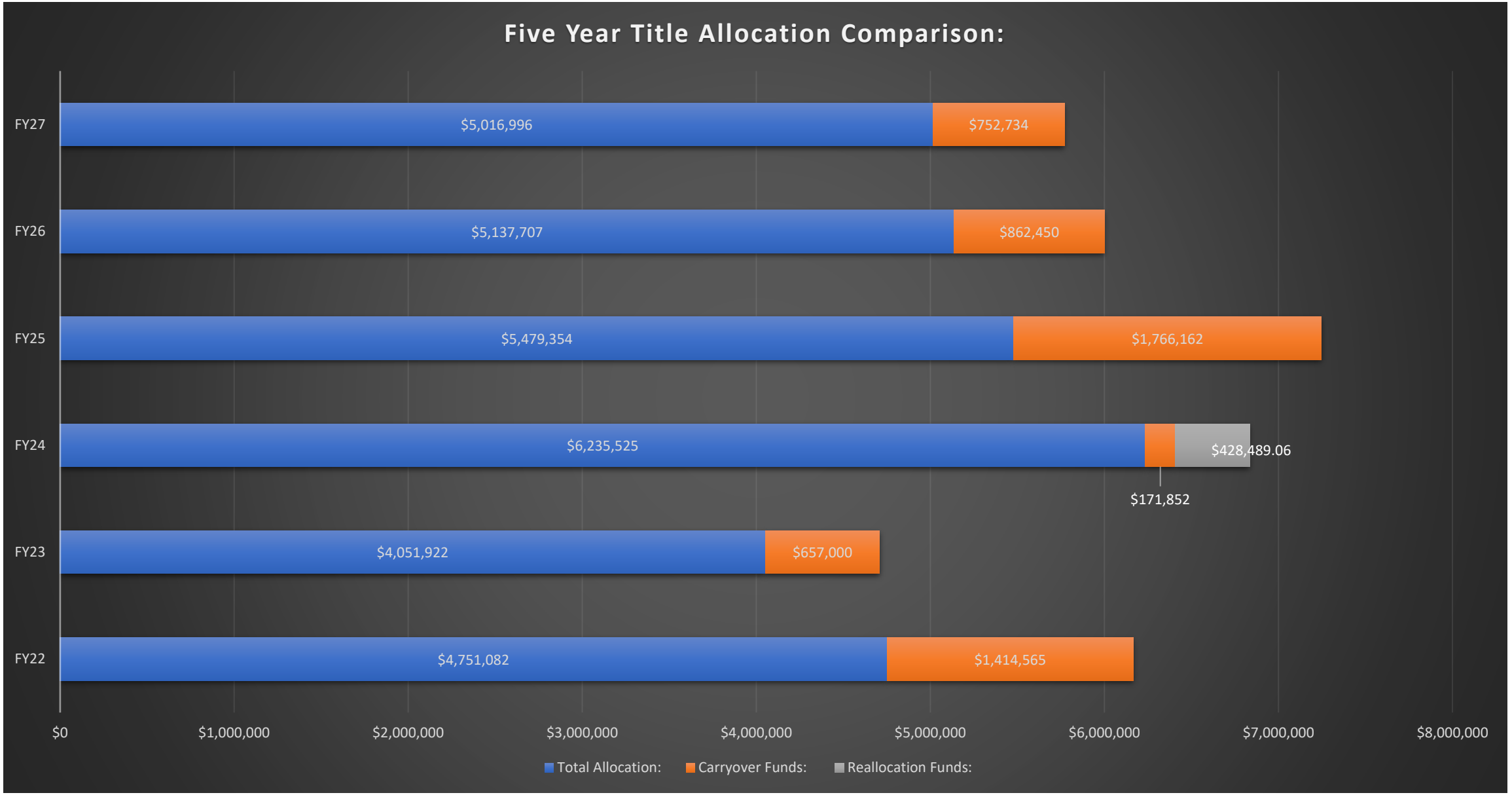
Five Year Title Allocation Comparison:
FY27
$5,016,996
$752,734
FY26
$5,137,707
$862,450
FY25
$5,479,354
$1,766,162
FY24
$6,235,525
$428,489.06
$171,852
FY23
$4,051,922
$657,000
FY22
$4,751,082
$1,414,565
$0
$1,000,000
$2,000,000
$3,000,000
$4,000,000
$5,000,000
$6,000,000
$7,000,000
$8,000,000
Total Allocation:
Carryover Funds:
Reallocation Funds:

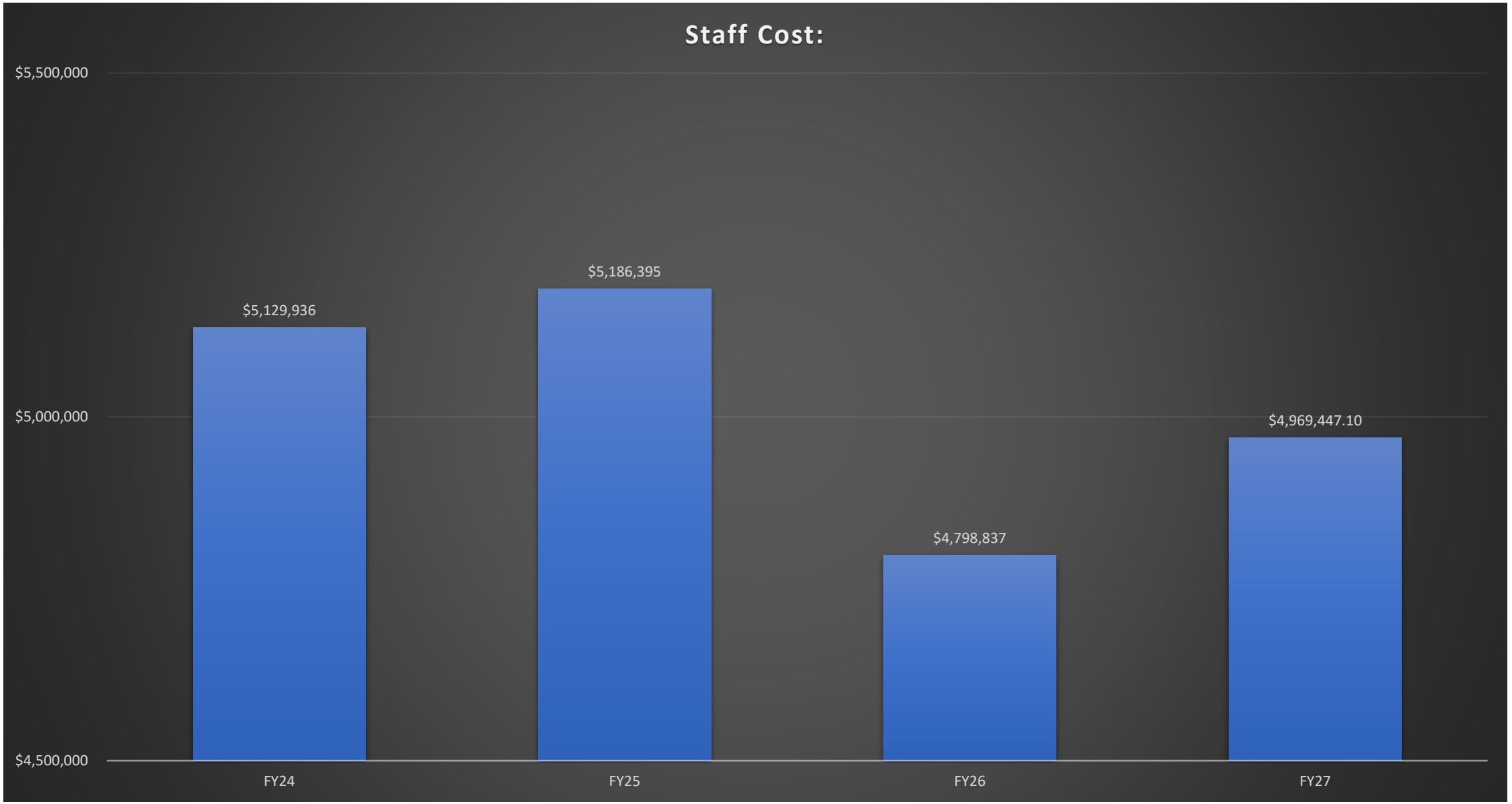
Staff Cost:
$5,500,000
$5,000,000
$4,500,000
$5,129,936
$5,186,395
$4,798,837
$4,969,447.10
FY24
FY25
FY26
FY27

Additional Title I Expenses from the Budget Allocation:

Non-Public Schools	$289,056.81
Local Neglected Funds	$117,220.90
Homeless Set Aside	$20,000.00
Parent and Family Engagement	$52,749.41
Carryover (FY27)	$500,000

Sioux City Community Schools
believe... achieve... succeed

Additional Information:

- State is allowing nonpublic schools to carryover funding again. Will negatively impact our 15% carryover by counting towards it.
- State's focus is to increase accountability of public schools in overseeing nonpublic school spending.
- Last year 4.61% of students considered low income were nonpublic, this year 4.89% are nonpublic.

Sioux City Community Schools
believe... achieve... succeed

Recommendation:

That the Board Of Directors acknowledges the fall 2026 Title 1A update.

Sioux City Community Schools
believe... achieve... succeed

Sioux City Community School District
Executive Summary
FY28 Budget Guiding Principles
October 26, 2026

Purpose:

To establish the FY28 budgetary guiding principles.

Explanation: **Contact:** Jim Vanderloo (712) 279-6643

The Interim Superintendent recommends that the District leadership use the following budgetary guiding principles in the development of the FY28 budget.

1. We will plan the budget with a multi-year strategy; the cash position of the District should remain at 20% or greater; the spending authority position of the District should not decrease below 20%.
2. A sustainable General Fund expenditure budget is a priority. The General Fund expenditure budget will be developed using no more than 3.5% of the spending authority reserve balance.
3. Any proposed new program or program expansion will be presented to the Board, and the sustainability of the program will be considered. The cost savings related to program eliminations or material reductions will be presented to the Board.
4. Student-teacher ratios will be highly considered in the budgeting process.

Impact on Student Achievement:

Proper funding provides systems, programs, and operations to yield student achievement.

Funding Source:

All funds

Priority:

Financial Health, Student Achievement/Continuous Academic Improvement for All Students, Special Education Program Implementation and Refinement, English Language Learners and Dual Language Program Implementation and Refinement, Staff Recruitment and Retention

Recommendation:

That the Board of Directors approves the FY28 budgetary guiding principles outlined above.

Sioux City Community School District
Executive Summary
Resolution to Consider Approving Transfer of Funds to the Flexibility Account Within the General Fund and Setting Hearing on Proposed Resolution Approving Expenditure of Funds in the Flexibility Account
October 26, 2026

Purpose:

To request Board approval to transfer $3,220,557.04 of Teacher Leadership Supplement funding to the Flexibility Account and set a public hearing on a proposed resolution approving expenditure of funds in the Flexibility Account.

Explanation: **Contact: Patty Blankenship (712) 279-6662**

Iowa Code Section 298A.2(2) permits the board of directors of a school district to transfer unused, unobligated amounts remaining at the end of the fiscal year from certain categorical funds to the school district's Flexibility Account within the General Fund.

The administration is proposing to transfer the June 30, 2026 Teacher Leadership Supplement balance of $3,220,557.04 to the Flexibility Account.

The administration believes the needs of students will be better served by the flexible expenditure of the above funds on classroom teacher salaries and benefits, including but not limited to middle school reading teachers.

Impact on Student Achievement:

The funding will be available to meet current student needs.

Funding Source:

General Fund

Priority:

Financial Health and Student Achievement/Continuous Academic Improvement for All Students

Recommendation:

That the Board of Directors approves the transfer of $3,220,557.04 of Teacher Leadership Supplement funding to the Flexibility Account.

That the Board of Directors set a public hearing for November 23, 2026 on the proposed resolution to expend funds from the Flexibility Account on middle school reading teacher salaries and benefits and any other General Fund expenditure.

ITEMS INCLUDED ON AGENDA

SIOUX CITY COMMUNITY SCHOOL DISTRICT

Flexibility Account Expenditures

- Resolution to Consider Approving Transfer of Funds to the Flexibility Account Within the General Fund and Setting Hearing on Proposed Resolution Approving Expenditure of Funds in the Flexibility Account.

NOTICE MUST BE GIVEN PURSUANT TO IOWA CODE CHAPTER 21 AND THE LOCAL RULES OF THE SCHOOL DISTRICT

October 26, 2026

The Board of Directors of the Sioux City Community School District, in the Counties of Woodbury and Plymouth, State of Iowa, met in open session, in the Educational Service Center, Sioux City Community School District, 627 4th St., Sioux City, Iowa, at 6:00 P.M., on the above date. There were present President Treyla Lee, in the chair, and the following named Board Members:

_____

_____

Absent: _____

* * * * * * *

President Treyla Lee introduced the following Resolution entitled "RESOLUTION TO CONSIDER APPROVING TRANSFER OF FUNDS TO THE FLEXIBILITY ACCOUNT WITHIN THE GENERAL FUND AND SETTING HEARING ON PROPOSED RESOLUTION APPROVING EXPENDITURE OF FUNDS IN THE FLEXIBILITY ACCOUNT". Board member _____ moved its adoption. Board Member _____ seconded the motion to adopt. The roll was called and the vote was,

AYES: _____

_____

NAYS: _____

The President declared the Resolution adopted.

* * * * *

RESOLUTION TO CONSIDER APPROVING TRANSFER OF FUNDS TO THE FLEXIBILITY ACCOUNT WITHIN THE GENERAL FUND AND SETTING HEARING ON PROPOSED RESOLUTION APPROVING EXPENDITURE OF FUNDS IN THE FLEXIBILITY ACCOUNT

WHEREAS, Iowa Code Section 298A.2(2) permits the board of directors of a school district to transfer unused, unobligated amounts remaining at the end of the fiscal year from certain categorical funds to the school district's Flexibility Account within the General Fund; and

WHEREAS, prior to the expenditure of amounts in the Flexibility Account, Iowa Code Section 298A.2(2)(d) requires the District to publish notice of the time, date, and place of a public hearing on the proposed resolution approving said expenditures; and

WHEREAS, it is in the best interests of the District to transfer funds into and expend funds from the Flexibility Account as allowed and authorized by Iowa Code Section 298A.2(2).

NOW, THEREFORE, be it resolved:

Section 1. The Board of Directors hereby authorizes the transfer of unexpended and unobligated funds in the amount of $3,220,557.04 from Teacher Leadership Supplement for fiscal year ending June 30, 2026 into the Flexibility Account within the General Fund from the Source and for the projects as listed in Section 2 of this Resolution, all in accordance with Iowa Code Section 298A.2(2).

Section 2. The Board of Directors proposes that the money in the Flexibility Account as identified in Section 1 of this Resolution be expended in the amounts and for the purposes, as follows, all in accordance with Iowa Code Section 298A.2(2):

ORIGINAL SOURCE & PURPOSE	FISCAL YEAR	AMOUNT	PLANNED EXPENDITURE
Teacher Leadership Supplement	2026	$3,220,557.04	Middle School Reading Teacher Salaries and Benefits and any General Fund expenditure

Section 3. The Board further finds and certifies the statutory requirements of each original source of funds described in Section 2 of this Resolution have been met.

Section 4. The Secretary is authorized and directed to give notice of a public hearing to be held in the Educational Service Center, Sioux City Community School District, 627 4th St., Sioux City, Iowa, at 6:00 P.M., on November 23, 2026. Such notice and Publication Certificate are attached as Exhibit A.

Section 5. Following the public hearing, the Board intends to take action on the question whether to expend the money in the Flexibility Account within the General Fund.

PASSED AND APPROVED this 26th day of October, 2026.

President of the Board of Directors

ATTEST:

Secretary of the Board of Directors

CERTIFICATE

STATE OF IOWA)
) SS
COUNTY OF WOODBURY)

I, the undersigned Secretary of the Board of Directors of the Sioux City Community School District, in the Counties of Woodbury and Plymouth, State of Iowa, do hereby certify that attached is a true and complete copy of the portion of the corporate records of the School District showing proceedings of the Board, and the same is a true and complete copy of the action taken by the Board with respect to the matter at the meeting held on the date indicated in the attachment, which proceedings remain in full force and effect, and have not been amended or rescinded in any way; that the meeting and all action was duly and publicly held in accordance with a notice of meeting and a tentative agenda, a copy of which was timely served on each member of the Board and posted pursuant to the local rules of the Board and the provisions of Chapter 21, Code of Iowa, upon reasonable advance notice to the public and media at least twenty-four hours prior to the commencement of the meeting as required by law and with members of the public present in attendance; I further certify that the individuals named therein were on the date thereof duly and lawfully possessed of their respective offices as indicated therein, that no board vacancy existed except as may be stated in the proceedings, and that no controversy or litigation is pending, prayed or threatened involving the incorporation, organization, existence or boundaries of the School District or the right of the individuals named therein as officers to their respective positions.

WITNESS my hand this _____ day of _____, 2026.

_____
Secretary of the Board of Directors of the Sioux City Community School District

EXHIBIT A

(NEWSPAPER COPY - TO BE PUBLISHED AT LEAST 10 BUT NOT MORE THAN 20 DAYS BEFORE THE DATE OF THE PUBLIC HEARING)

NOTICE OF PUBLIC HEARING
SIOUX CITY COMMUNITY SCHOOL DISTRICT

NOTICE IS HEREBY GIVEN, pursuant to Iowa Code Chapters 21 and 298A, that a public hearing will be held by the Sioux City Community School District on November 23, 2026, at 6:00 P.M., in the Educational Service Center, Sioux City Community School District, 627 4th St., Sioux City, Iowa. This hearing is on a proposed resolution to expend funds from the District's Flexibility Account within the General Fund for the purposes identified below. These funds were unexpended and unobligated from the source identified below.

ORIGINAL SOURCE & PURPOSE	FISCAL YEAR	AMOUNT	PLANNED EXPENDITURE
Teacher Leadership Supplement	2026	$3,220,557.04	Middle School Reading Teacher Salaries and Benefits and any General Fund expenditure

All persons interested are invited to attend this hearing and be heard. Written comments may be submitted to the Board Secretary of the Sioux City Community School District prior to or at the date and time of the public hearing.

Published on order of the Sioux City Community School District, Board of Directors.

_____
Secretary of the Board of Directors
Sioux City Community School District

(End of Notice)

STATE OF IOWA)
) SS PUBLICATION CERTIFICATE
COUNTY OF WOODBURY)

I certify that I am now the elected and acting Secretary of the Board of Directors of the Sioux City Community School District, in the Counties of Woodbury and Plymouth, State of Iowa, and that as Secretary of the Board of Directors and by full authority from the Board of Directors, I caused a

NOTICE OF PUBLIC HEARING FOR THE
SIOUX CITY COMMUNITY SCHOOL DISTRICT

of which the clipping annexed to the publisher's affidavit attached is a complete copy published at least once, not less than ten clear days nor more than twenty days prior to the date of the public hearing, in the Sioux City Journal, a legal newspaper published regularly and has a general circulation within the District, and that the Notice was published in the newspaper in all of the issues published and circulated on the following date:

_____, 2026

which was at least ten (10) but not more than twenty (20) days before the hearing.

Dated this _____ day of _____, 2026.

_____
Secretary of the Board of Directors of the Sioux City Community School District

ATTACH AFFIDAVIT OF PUBLICATION

4899-0996-0411-1\13440-000

Sioux City Community School District
Executive Summary
Solution Tree
October 26, 2026

Purpose:

To request the approval of the purchase of professional development services from Solution Tree by Bishop Heelan Catholic Schools for the 2026-2027 school year.

Explanation: **Contact:** Amy Denney at 712-279-6822

A Professional Learning Community (PLC) is an ongoing process in which educators work collaboratively in recurring cycles of collective inquiry and action research to achieve better results for the students they serve. Professional learning communities operate under the assumption that the key to improved learning for students is continuous job-embedded learning for educators. Teachers in our middle schools and high schools will continue to be supported with implementing PLCs through professional development including foundational practices, planning, embedded coaching, learning resources and on-site support.

This specific request is for Bishop Heelan Catholic Schools to participate in PD to support Professional Learning Communities at Work on January 15, 2027.

Impact on Student Achievement:

Systematic processes engage teachers and administrators in an ongoing cycle of:

- Gathering evidence of current levels of student learning
- Developing strategies and ideas to build on strengths and address weaknesses in that learning
- Implementing those strategies and ideas
- Analyzing the impact of the changes to discover what was effective and what was not
- Applying new knowledge in the next cycle of continuous improvement

Funding Source:

Title II

Priority:

Student Achievement

Recommendation:

That the Sioux City Community School District Board of Directors approves the purchase of professional development services with Solution Tree for $7,500.00 for Bishop Heelan Catholic Schools for the 2026-2027 school year.

Solution Tree
Purchase Agreement

Effective as of the last date of signature below, Solution Tree Inc. ("Solution Tree"), located at 555 N. Morton St., Bloomington, IN 47404, and Sioux City Community Schools on behalf of Bishop Heelan Catholic Schools ("Customer"), located at 50 13th St., Sioux City, IA, 51103, agree as follows:

1. **Purchase Summary:** Customer will purchase and Solution Tree will provide the products and services described below. Customer will provide Solution Tree with a purchase order for the full amount due under this Agreement, including any applicable taxes. All payments will be due net 30 days from actual date of invoice with all past due invoices subject to monthly finance charges as allowed by law.

Description	Payment	Expected Invoice Date
Professional Development Services (Non-refundable 20% Deposit)	$1,500.00	Upon execution of Agreement
Professional Development Services (Remainder)	$6,000.00	Incrementally after each date
Total	$7,500.00	

2. **Professional Development Services:** Solution Tree agrees to provide a presenter, William M. Ferriter, to disseminate information for Customer on the topic of *Professional Learning Communities at Work*® on January 15, 2027. Except for any pre-printed binders or other materials Solution Tree provides, Customer will reproduce any handouts and other print materials related to the services. Customer will provide a venue, audio/video equipment, and technical support capable of receiving and displaying all onsite or virtual sessions.

3. **General Terms**

3.1. **Intellectual Property:** Customer acknowledges that all tangible or electronic presentation materials, handouts, and/or program books used in conjunction with services performed under this Agreement are pre-existing and that no materials will be developed specifically for Customer. All previously owned rights will be retained, and Customer may not reproduce any materials not designated reproducible without express written permission. All audio, video, and digital recording of the services by Customer is prohibited.

3.2. **Authorization:** Customer warrants that it has gone through all required approval and procurement processes related to a purchase of this size and that Customer's signatory has the authority to bind Customer to the terms of this Agreement.

3.3. **Force Majeure:** If an event beyond the parties' control makes performance impossible, illegal, or commercially impracticable by preventing services from occurring as scheduled, the parties will use best efforts to reschedule or make substitutions for affected services or products. If performance is prevented entirely, neither party will have any further liability to the other party for the prevented performance. All unaffected obligations will remain in place.

3.4. Termination: Solution Tree may terminate this Agreement if Customer does not provide a purchase order at least 30 days before the first scheduled date. If Customer seeks to cancel any services within 90 days of the scheduled date for any reason but Force Majeure and Solution Tree agrees to such cancellation, Customer will reimburse Solution Tree for any reasonable business expenses incurred in anticipation of performance of this Agreement that exceed the amount of the deposit.

3.5. Entire Agreement: This Agreement, any purchase orders issued pursuant to this Agreement, any RFP in place between the parties, any other written agreement executed by the parties for the same services included in this Agreement, and any exhibits attached hereto constitute the entire agreement of the parties and supersede any prior or contemporaneous written or oral understanding or agreement. No waiver or modification of any of the terms of the Agreement will be effective unless made in writing and signed by both parties, and the unenforceability, invalidity, or illegality of any provision of this Agreement will not render the other provisions unenforceable, invalid, or illegal. Any waiver by either party of any default or breach hereunder will not constitute a waiver of any provision of this Agreement or of any subsequent default or breach of the same or a different kind.

This Agreement is acknowledged and accepted by Customer and Solution Tree:

By: _____ _____

Name: Date

Title:

Entity: Sioux City Community Schools

By: _____ _____

Date

Sioux City Community School District
Executive Summary
Contracts for Board Approval
October 26, 2026

Purpose:

For the Board to approve and execute various contracts.

Explanation:

Contact: Rebecca Rieken (712) 279-6673
Jarod Mozer (712) 279-6677

The Sioux City Community School District will enter into contracts with outside agencies to provide services to students and families.

No Cost Contracts:

a) Wayne State College Clinical Practice Placement Agreement for student teachers during the Spring 2027 semester.
b) Agreement between Northwest Area Education Agency and the Sioux City Community School District pursuant to the provisions of Iowa Code Chapter 28E from Flow Through Money, Title 1A (Neglected).

Cost Contracts:

a) SCT Costume Shop and North High School Drama Department for costume rentals, funded by the Drama Account, for $500.

Impact on Student Achievement:

Provide support and services to students, staff, buildings, and parents.

Funding Source:

See above

Priority:

Student Achievement/Continuous Improvement for All Students

Recommendation:

That the Board of Directors approves and executes the above contracts to support student learning and activities.

Field Experience and Certification
1111 Main Street
Wayne, NE 68787
Phone: (402) 375-7373 FAX: (402) 375-7414

WAYNE STATE COLLEGE
SCHOOL OF EDUCATION AND BEHAVIORAL SCIENCES

CLINICAL PRACTICE PLACEMENT AGREEMENT
Term: Spring 2027

Teacher Candidate: Camas Velasquez, Bianka

Endorsement(s): Elementary

- **Grade Range for this Endorsement**: *K to Grade 6*
- **Length of Experience:** *Full day/16 Weeks*
- **Experience Needed:** *full days in a classroom within the above grade range*
- **Start Date**: *When teachers return after winter break in January*

Request sent to: Sioux City Community Schools

Dear Administrator:
Please return form as soon as possible. We are also requesting a copy of your school year calendar if possible. Thank you for your assistance with this request!

☐ **Yes, we will accept**. **Please indicate teacher/faculty start date here**: _____. As part of the clinical practice experience, our student teachers should participate in professional development.
☐ **No, sorry we cannot accept.** *If not accepting, please include a brief explanation on back of this page*

Please see reverse for assurance and required signature.

#1 Cooperating Teacher: (please print name) _____

Endorsement(s) Held: _____ Years of Teaching Experience: _____

Email Address (please print): _____

Teaching Assignment (i.e. grade and/or subjects that teacher candidate will teach):_____

School/Building: _____ I am interested in Co-teaching* ☐Yes ☐ No ☐ Maybe

#2 Cooperating Teacher: (not required on all placements) (please print name) _____

Endorsement(s) Held: _____ Years of Teaching Experience: _____

Email Address (please print): _____

Teaching Assignment (i.e. grade and/or subjects that teacher candidate will teach):_____

School/Building: _____ I am interested in Co-teaching* ☐ Yes ☐ No ☐ Maybe

**The Co-Teaching Workshop for both the cooperating teacher(s) and the candidate is generally held prior to the beginning of the cooperating school's semester at WSC.*

If there are 2 cooperating teachers assigned, please indicate the format of the placement arrangement by selecting one option:

_☐_ candidate will work with both teachers simultaneously

_☐_ candidate will work with Cooperating Teacher 1 for the first half and then switch to Cooperating Teacher 2

Placement Assurances

Please indicate "Yes" or "No" for each item below to verify the placement of the candidate meets the specified criteria. If any item is marked "No," please provide additional details or explanations below. Thank you for your attention to these placement assurances.

1. The cooperating teachers that I've placed this candidate with meets the criteria below:
    a. Knowledge of the context and content area of the candidate's teaching assignment
    b. Demonstrates commitment to professional learning and collaboration
    c. Possesses a teaching license in the same endorsement or level of the candidate's declared endorsements (NDE rule)
    d. Able, willing, and flexible to meet the candidate's needs for support
    e. Has a minimum of three years of effective teaching experience (NDE rule)

    ☐Yes
    ☐No
2. I have reviewed and confirm that the most recent evaluations demonstrate that the selected cooperating teacher(s) meets or exceeds districts expectations in all performance standards.
    ☐Yes
    ☐No
3. ***For departmentalized elementary teachers and secondary*** fields (e.g., Social Science, Math, Science), I have ensured the candidate is placed with multiple teachers to teach a variety of subjects/preps. We do not want them teaching math all day if Elementary or just Biology if Science, etc.
    ☐Yes
    ☐No
    ☐N/A
4. ***PK-12 or K-12 Candidates Only:*** I have the PK-12 candidate placed with teachers at both levels (grades within PK-6 and 7-12). See number 2 below.
    ☐Yes
    ☐No
    ☐N/A
5. I support the cooperating teacher(s) attending the Co-Teaching Workshop should they opt to co-teach with their teacher candidate.
    ☐Yes
    ☐No

Additional Notes or Explanations:

Guidelines:

1. In keeping with Nebraska Department of Education (NDE) regulations, we are requesting that the placements are full-day experiences that begin in August or January (when teachers return) and run for either 16 weeks or 18 weeks (depending on endorsement combination). Please read this request form carefully to ensure appropriate placement.
2. PK-12 (Art, Music, Health/Physical Education) or the K-12 Special Education requires experience to be divided between elementary and secondary assignments. Most will be 8 weeks and 8 weeks, but other configurations might work, too, e.g. mornings in elementary and afternoons in secondary. Please note that PK-12 Music placements should provide experience in both vocal and instrumental music - if the student is pursuing both disciplines (some are just pursuing Vocal.) They could be Vocal Primary and if that is the case, they can be placed in Vocal at both levels but should still have an instrumental placement for a period of time. Please contact me if you have questions about the configuration of any of the PK-12 placements.
3. For all other endorsements, the clinical practice must include each area indicated, but not necessarily in equal amounts, e.g. if the candidate is pursuing Math and English, the clinical practice could be 2 periods in Math and 4 periods in English each day. Please don't hesitate to call me if you have questions about how to structure the placement.

We require our candidates to successfully complete all coursework, field experiences, and benchmarks prior to clinical practice. If a candidate does not meet our requirements, you will be notified immediately. Candidates are required to complete a background check upon admission to the program. Students are not required to complete a second background check prior to clinical practice unless specified in an MOU, however, they are required to self-disclose charges after the initial check. Background checks outside of the initial background check and/or MOU will be the responsibility of the school district.

Please attach a copy of the 2026-2027 School Year or Spring Semester calendar so we can best prepare your candidate.

Principal's Signature:** _____Date Signed: _____
***Must sign with an Adobe Acrobat e-signature or handwritten signature*

Principal's Contact Information: Email _____ Phone_____

Field Experience and Certification
1111 Main Street
Wayne, NE 68787
Phone: (402) 375-7373 FAX: (402) 375-7414

WAYNE STATE COLLEGE
SCHOOL OF EDUCATION AND BEHAVIORAL SCIENCES

CLINICAL PRACTICE PLACEMENT AGREEMENT
Term: Spring 2027

Teacher Candidate: Garcia, Diana

Endorsement(s): Secondary English

- **Grade Range for this Endorsement**: *Grades 6 to 12*
- **Length of Experience:** *Full day/16 Weeks*
- **Experience Needed:** *full days for 16 weeks; candidate needs experience in content area(s) specified above*
- **Start Date**: *When teachers return after winter break in January*

Request sent to: Sioux City Community Schools
Candidate has requested (if available): *East Middle 7th grade*
This candidate is interested in co-teaching.*

Dear Administrator:
Please return form as soon as possible. We are also requesting a copy of your school year calendar if possible. Thank you for your assistance with this request!

☐ **Yes, we will accept**. **Please indicate <u>teacher/faculty</u> start date here**: _____. As part of the clinical practice experience, our student teachers should participate in professional development.
☐ **No, sorry we cannot accept.** *If not accepting, please include a brief explanation on back of this page*

Please see reverse for assurance and required signature.

#1 Cooperating Teacher: (please print name) _____

Endorsement(s) Held: _____ Years of Teaching Experience: _____

Email Address (please print): _____

Teaching Assignment (i.e. grade and/or subjects that teacher candidate will teach):_____

School/Building: _____ I am interested in Co-teaching* ☐Yes ☐ No ☐ Maybe

#2 Cooperating Teacher: (not required on all placements) (please print name) _____

Endorsement(s) Held: _____ Years of Teaching Experience: _____

Email Address (please print): _____

Teaching Assignment (i.e. grade and/or subjects that teacher candidate will teach):_____

School/Building: _____ I am interested in Co-teaching* ☐ Yes ☐ No ☐ Maybe

**The Co-Teaching Workshop for both the cooperating teacher(s) and the candidate is generally held prior to the beginning of the cooperating school's semester at WSC.*

If there are 2 cooperating teachers assigned, please indicate the format of the placement arrangement by selecting one option:

_☐_ candidate will work with both teachers simultaneously

_☐_ candidate will work with Cooperating Teacher 1 for the first half and then switch to Cooperating Teacher 2

Placement Assurances

Please indicate "Yes" or "No" for each item below to verify the placement of the candidate meets the specified criteria. If any item is marked "No," please provide additional details or explanations below. Thank you for your attention to these placement assurances.

1. The cooperating teachers that I've placed this candidate with meets the criteria below:
    a. Knowledge of the context and content area of the candidate's teaching assignment
    b. Demonstrates commitment to professional learning and collaboration
    c. Possesses a teaching license in the same endorsement or level of the candidate's declared endorsements (NDE rule)
    d. Able, willing, and flexible to meet the candidate's needs for support
    e. Has a minimum of three years of effective teaching experience (NDE rule)

    ☐Yes
    ☐No
2. I have reviewed and confirm that the most recent evaluations demonstrate that the selected cooperating teacher(s) meets or exceeds districts expectations in all performance standards.
    ☐Yes
    ☐No
3. ***For departmentalized elementary teachers and secondary*** fields (e.g., Social Science, Math, Science), I have ensured the candidate is placed with multiple teachers to teach a variety of subjects/preps. We do not want them teaching math all day if Elementary or just Biology if Science, etc.
    ☐Yes
    ☐No
    ☐N/A
4. ***PK-12 or K-12 Candidates Only:*** I have the PK-12 candidate placed with teachers at both levels (grades within PK-6 and 7-12). See number 2 below.
    ☐Yes
    ☐No
    ☐N/A
5. I support the cooperating teacher(s) attending the Co-Teaching Workshop should they opt to co-teach with their teacher candidate.
    ☐Yes
    ☐No

Additional Notes or Explanations:

Guidelines:

1. In keeping with Nebraska Department of Education (NDE) regulations, we are requesting that the placements are full-day experiences that begin in August or January (when teachers return) and run for either 16 weeks or 18 weeks (depending on endorsement combination). Please read this request form carefully to ensure appropriate placement.
2. PK-12 (Art, Music, Health/Physical Education) or the K-12 Special Education requires experience to be divided between elementary and secondary assignments. Most will be 8 weeks and 8 weeks, but other configurations might work, too, e.g. mornings in elementary and afternoons in secondary. Please note that PK-12 Music placements should provide experience in both vocal and instrumental music - if the student is pursuing both disciplines (some are just pursuing Vocal.) They could be Vocal Primary and if that is the case, they can be placed in Vocal at both levels but should still have an instrumental placement for a period of time. Please contact me if you have questions about the configuration of any of the PK-12 placements.
3. For all other endorsements, the clinical practice must include each area indicated, but not necessarily in equal amounts, e.g. if the candidate is pursuing Math and English, the clinical practice could be 2 periods in Math and 4 periods in English each day. Please don't hesitate to call me if you have questions about how to structure the placement.

We require our candidates to successfully complete all coursework, field experiences, and benchmarks prior to clinical practice. If a candidate does not meet our requirements, you will be notified immediately. Candidates are required to complete a background check upon admission to the program. Students are not required to complete a second background check prior to clinical practice unless specified in an MOU, however, they are required to self-disclose charges after the initial check. Background checks outside of the initial background check and/or MOU will be the responsibility of the school district.

Please attach a copy of the 2026-2027 School Year or Spring Semester calendar so we can best prepare your candidate.

Principal's Signature:** _____Date Signed: _____
***Must sign with an Adobe Acrobat e-signature or handwritten signature*

Principal's Contact Information: Email _____ Phone_____

Field Experience and Certification
1111 Main Street
Wayne, NE 68787
Phone: (402) 375-7373 FAX: (402) 375-7414

WAYNE STATE COLLEGE
SCHOOL OF EDUCATION AND BEHAVIORAL SCIENCES

CLINICAL PRACTICE PLACEMENT AGREEMENT
Term: Spring 2027

Teacher Candidate: Ramos-Perez, Nissi

Endorsement(s): FCS

- **Grade Range for this Endorsement**: *Grades 6 to 12*
- **Length of Experience:** *Full day/16 Weeks*
- **Experience Needed:** *full days for 16 weeks; candidate needs experience in content area(s) specified above*
- **Start Date**: *When teachers return after winter break in January*

Request sent to: Sioux City Community Schools
Candidate has requested (if available): *North High School, Mrs. Miller*
This candidate is interested in co-teaching.*

Dear Administrator:
Please return form as soon as possible. We are also requesting a copy of your school year calendar if possible. Thank you for your assistance with this request!

☐ **Yes, we will accept**. **Please indicate <u>teacher/faculty</u> start date here**: _____. As part of the clinical practice experience, our student teachers should participate in professional development.
☐ **No, sorry we cannot accept.** *If not accepting, please include a brief explanation on back of this page*

Please see reverse for assurance and required signature.

#1 Cooperating Teacher: (please print name) _____

Endorsement(s) Held: _____ Years of Teaching Experience: _____

Email Address (please print): _____

Teaching Assignment (i.e. grade and/or subjects that teacher candidate will teach):_____

School/Building: _____ I am interested in Co-teaching* ☐Yes ☐ No ☐ Maybe

#2 Cooperating Teacher: (not required on all placements) (please print name) _____

Endorsement(s) Held: _____ Years of Teaching Experience: _____

Email Address (please print): _____

Teaching Assignment (i.e. grade and/or subjects that teacher candidate will teach):_____

School/Building: _____ I am interested in Co-teaching* ☐ Yes ☐ No ☐ Maybe

**The Co-Teaching Workshop for both the cooperating teacher(s) and the candidate is generally held prior to the beginning of the cooperating school's semester at WSC.*

If there are 2 cooperating teachers assigned, please indicate the format of the placement arrangement by selecting one option:

_☐_ candidate will work with both teachers simultaneously

_☐_ candidate will work with Cooperating Teacher 1 for the first half and then switch to Cooperating Teacher 2

Placement Assurances

Please indicate "Yes" or "No" for each item below to verify the placement of the candidate meets the specified criteria. If any item is marked "No," please provide additional details or explanations below. Thank you for your attention to these placement assurances.

1. The cooperating teachers that I've placed this candidate with meets the criteria below:
    a. Knowledge of the context and content area of the candidate's teaching assignment
    b. Demonstrates commitment to professional learning and collaboration
    c. Possesses a teaching license in the same endorsement or level of the candidate's declared endorsements (NDE rule)
    d. Able, willing, and flexible to meet the candidate's needs for support
    e. Has a minimum of three years of effective teaching experience (NDE rule)

    ☐Yes
    ☐No
2. I have reviewed and confirm that the most recent evaluations demonstrate that the selected cooperating teacher(s) meets or exceeds districts expectations in all performance standards.
    ☐Yes
    ☐No
3. ***For departmentalized elementary teachers and secondary*** fields (e.g., Social Science, Math, Science), I have ensured the candidate is placed with multiple teachers to teach a variety of subjects/preps. We do not want them teaching math all day if Elementary or just Biology if Science, etc.
    ☐Yes
    ☐No
    ☐N/A
4. ***PK-12 or K-12 Candidates Only:*** I have the PK-12 candidate placed with teachers at both levels (grades within PK-6 and 7-12). See number 2 below.
    ☐Yes
    ☐No
    ☐N/A
5. I support the cooperating teacher(s) attending the Co-Teaching Workshop should they opt to co-teach with their teacher candidate.
    ☐Yes
    ☐No

Additional Notes or Explanations:

Guidelines:

1. In keeping with Nebraska Department of Education (NDE) regulations, we are requesting that the placements are full-day experiences that begin in August or January (when teachers return) and run for either 16 weeks or 18 weeks (depending on endorsement combination). Please read this request form carefully to ensure appropriate placement.
2. PK-12 (Art, Music, Health/Physical Education) or the K-12 Special Education requires experience to be divided between elementary and secondary assignments. Most will be 8 weeks and 8 weeks, but other configurations might work, too, e.g. mornings in elementary and afternoons in secondary. Please note that PK-12 Music placements should provide experience in both vocal and instrumental music - if the student is pursuing both disciplines (some are just pursuing Vocal.) They could be Vocal Primary and if that is the case, they can be placed in Vocal at both levels but should still have an instrumental placement for a period of time. Please contact me if you have questions about the configuration of any of the PK-12 placements.
3. For all other endorsements, the clinical practice must include each area indicated, but not necessarily in equal amounts, e.g. if the candidate is pursuing Math and English, the clinical practice could be 2 periods in Math and 4 periods in English each day. Please don't hesitate to call me if you have questions about how to structure the placement.

We require our candidates to successfully complete all coursework, field experiences, and benchmarks prior to clinical practice. If a candidate does not meet our requirements, you will be notified immediately. Candidates are required to complete a background check upon admission to the program. Students are not required to complete a second background check prior to clinical practice unless specified in an MOU, however, they are required to self-disclose charges after the initial check. Background checks outside of the initial background check and/or MOU will be the responsibility of the school district.

Please attach a copy of the 2026-2027 School Year or Spring Semester calendar so we can best prepare your candidate.

Principal's Signature:** _____Date Signed: _____
***Must sign with an Adobe Acrobat e-signature or handwritten signature*

Principal's Contact Information: Email _____ Phone_____

Field Experience and Certification
1111 Main Street
Wayne, NE 68787
Phone: (402) 375-7373 FAX: (402) 375-7414

WAYNE STATE COLLEGE
SCHOOL OF EDUCATION AND BEHAVIORAL SCIENCES

CLINICAL PRACTICE PLACEMENT AGREEMENT
Term: Spring 2027

Teacher Candidate: Walden, Lemuel

Endorsement(s): Health & PE

- **Grade Range for this Endorsement**: *PreK to 12th Grade*
- **Length of Experience:** *Full day/16 Weeks*
- **Experience Needed:** *needs time at elementary level and time at secondary level – could split days (AM and PM) or could split overall experience (8 weeks and 8 weeks)*
- **Start Date**: *When teachers return after winter break in January*

Request sent to: Sioux City Community Schools
Candidate has requested (if available): *Cannot be placed at Bryant Elementary, West High School, Loess Hills Elementary, East Middle School.*
This candidate is interested in co-teaching.*

Dear Administrator:
Please return form as soon as possible. We are also requesting a copy of your school year calendar if possible. Thank you for your assistance with this request!

☐ **Yes, we will accept**. **Please indicate teacher/faculty start date here**: _____. As part of the clinical practice experience, our student teachers should participate in professional development.
☐ **No, sorry we cannot accept.** *If not accepting, please include a brief explanation on back of this page*

Please see reverse for assurance and required signature.

#1 Cooperating Teacher: (please print name) _____

Endorsement(s) Held: _____ Years of Teaching Experience: _____

Email Address (please print): _____

Teaching Assignment (i.e. grade and/or subjects that teacher candidate will teach):_____

School/Building: _____ I am interested in Co-teaching* ☐Yes ☐ No ☐ Maybe

#2 Cooperating Teacher: (not required on all placements) (please print name) _____

Endorsement(s) Held: _____ Years of Teaching Experience: _____

Email Address (please print): _____

Teaching Assignment (i.e. grade and/or subjects that teacher candidate will teach):_____

School/Building: _____ I am interested in Co-teaching* ☐ Yes ☐ No ☐ Maybe

**The Co-Teaching Workshop for both the cooperating teacher(s) and the candidate is generally held prior to the beginning of the cooperating school's semester at WSC.*

If there are 2 cooperating teachers assigned, please indicate the format of the placement arrangement by selecting one option:

_☐_ candidate will work with both teachers simultaneously

_☐_ candidate will work with Cooperating Teacher 1 for the first half and then switch to Cooperating Teacher 2

Placement Assurances

Please indicate "Yes" or "No" for each item below to verify the placement of the candidate meets the specified criteria. If any item is marked "No," please provide additional details or explanations below. Thank you for your attention to these placement assurances.

1. The cooperating teachers that I've placed this candidate with meets the criteria below:
    a. Knowledge of the context and content area of the candidate's teaching assignment
    b. Demonstrates commitment to professional learning and collaboration
    c. Possesses a teaching license in the same endorsement or level of the candidate's declared endorsements (NDE rule)
    d. Able, willing, and flexible to meet the candidate's needs for support
    e. Has a minimum of three years of effective teaching experience (NDE rule)

    ☐Yes
    ☐No
2. I have reviewed and confirm that the most recent evaluations demonstrate that the selected cooperating teacher(s) meets or exceeds districts expectations in all performance standards.
    ☐Yes
    ☐No
3. ***For departmentalized elementary teachers and secondary*** fields (e.g., Social Science, Math, Science), I have ensured the candidate is placed with multiple teachers to teach a variety of subjects/preps. We do not want them teaching math all day if Elementary or just Biology if Science, etc.
    ☐Yes
    ☐No
    ☐N/A
4. ***PK-12 or K-12 Candidates Only:*** I have the PK-12 candidate placed with teachers at both levels (grades within PK-6 and 7-12). See number 2 below.
    ☐Yes
    ☐No
    ☐N/A
5. I support the cooperating teacher(s) attending the Co-Teaching Workshop should they opt to co-teach with their teacher candidate.
    ☐Yes
    ☐No

Additional Notes or Explanations:

Guidelines:

1. In keeping with Nebraska Department of Education (NDE) regulations, we are requesting that the placements are full-day experiences that begin in August or January (when teachers return) and run for either 16 weeks or 18 weeks (depending on endorsement combination). Please read this request form carefully to ensure appropriate placement.
2. PK-12 (Art, Music, Health/Physical Education) or the K-12 Special Education requires experience to be divided between elementary and secondary assignments. Most will be 8 weeks and 8 weeks, but other configurations might work, too, e.g. mornings in elementary and afternoons in secondary. Please note that PK-12 Music placements should provide experience in both vocal and instrumental music - if the student is pursuing both disciplines (some are just pursuing Vocal.) They could be Vocal Primary and if that is the case, they can be placed in Vocal at both levels but should still have an instrumental placement for a period of time. Please contact me if you have questions about the configuration of any of the PK-12 placements.
3. For all other endorsements, the clinical practice must include each area indicated, but not necessarily in equal amounts, e.g. if the candidate is pursuing Math and English, the clinical practice could be 2 periods in Math and 4 periods in English each day. Please don't hesitate to call me if you have questions about how to structure the placement.

We require our candidates to successfully complete all coursework, field experiences, and benchmarks prior to clinical practice. If a candidate does not meet our requirements, you will be notified immediately. Candidates are required to complete a background check upon admission to the program. Students are not required to complete a second background check prior to clinical practice unless specified in an MOU, however, they are required to self-disclose charges after the initial check. Background checks outside of the initial background check and/or MOU will be the responsibility of the school district.

Please attach a copy of the 2026-2027 School Year or Spring Semester calendar so we can best prepare your candidate.

Principal's Signature:** _____Date Signed: _____
***Must sign with an Adobe Acrobat e-signature or handwritten signature*

Principal's Contact Information: Email _____ Phone_____

SCT COSTUME SHOP

PO Box 1225 518 1st Ave E Spencer, IA 51301
712-262-5765 info@sctplayhouse.org www.sctplayhouse.org

COSTUME RENTAL CONTRACT-Terms and Conditions

School/Organization: Sioux City North High Drama

Play/Musical/Event: The Importance of Being Earnest Performance Dates: Nov 5, 6, 7

Date that Costumes will be returned (no later than 7 days after final performance):

Please note that regular costume shop hours are Tuesday and Thursday 1 to 5pm. Costumes can only be picked up during those hours. Arrangements can be made for other drop off times for returns to the office if necessary.

Contract and Forms- SCT Costume Shop needs to receive contract **and** measurement forms, along with a completed plot, before costumes are reserved. If an SCT plot is not available, then a completed and detailed list of costumes needed must be provided with the contract and measurements.

Pricing- You will receive a sales order listing all costume pieces sent and their rental fees. The rental fees cover a rental period that begins no sooner than **2 weeks** prior to your first production date/event and ends no later than one week following your closing production date/event. The rental fees also cover up to two weekends of production. Any extra weekends of production will incur a fee of **50%** of the rental total.

Rush Fee-There will be a **25%** rush fee for costumes ordered within 14 days of your pick-up date.

Change of Contract- In the event of a dismissal on the rentee's part after a signed contract has already been received, there will be a **50%** fee charged in accordance to the original costumes signed for.

Packing Slip- If there are any discrepancies between your shipment and the packing slip, we must be notified when you receive your shipment in order to correct them.

Did Not Use Policy "DNU"/Restocking Fee. You will be charged a **10%** restocking fee for each item returned unused. If arrangements have been made for you to take pictures of unused items, you must email the pictures to info@sctplayhouse.org before the first night of your show.

Cleaning-The cleaning fee is included in the cost of the rental. You are **not** responsible for the cleaning of rental items. This responsibility will be handled by the staff of the SCT Costume Shop, unless otherwise negotiated.

Shipping-We charge actual shipping cost, insurance, plus a $7.50 handling fee per box. You are responsible for shipping and insurance costs to and from your organization. You must insure the costumes for replacement value when returning, as you are responsible for the costumes until they are in our possession. We charge a handling fee of $15 per box shipped back to our P.O. Box. Please use UPS, if possible.

Alterations-Costumes may be temporarily altered with basting stitches only. Permanent alterations change the original state of the costume and will be considered permanent damage to our property. Damage fees will apply. See alteration guide for more information.

Damage/Missing Item Fees-You are responsible for any loss or damage to the costumes rented. Damage fees and missing item fees will be assessed at a minimum of **4 times** the rental charge, or the amount noted on your packing slip next to the item. Reasonable wear to costumes through normal use is to be expected and accepted, but any permanently damaged costume piece will have a damage fee applied. Damages include, but are not limited to, costumes that have been dyed, stained, painted, glued, taped, ripped, burned, torn, altered by removing or adding ornamentation, cut, packaged incorrectly, washed improperly or stained by makeup. Payment of the damage fee does not constitute a transfer of ownership.

Late Fees-Your costume rental must be returned on the date indicated. You will be charged a fee of **50%** of the entire rental costs **on the day after** your due date for every week your items are past due.

Indemnify and hold harmless: You agree to indemnify and hold harmless Spencer Community Theatre, Inc., its officers, directors, employees, and its affiliates, from and against any and all claims for loss, damage, liability, or injury, however caused, resulting directly or indirectly, from this rental. You waive all rights of subrogation to the extent permitted by your insurance policy.

The Billing Process-After your return, we will send an invoice including rental charges, credits and fees. The rental invoice is due upon receipt.

Availability-Completion of this contract does not guarantee full availability of costumes requested.

Liability-If a purchase order is not given by the organization giving the below-signed person(s) permission to rent on their behalf, the below-signed person(s) will assume any and all liabilities incurred to the SCT Costume Shop.

I/We are hereby under a costume rental contract and are liable for all costumes rented. I/We understand the policies described above and agree to the terms of this agreement. This contract MUST be signed by persons 18 years of age or older.

Signed by Director/Costumer: [signature] Date: 9-29-24

Signed by Principal/Treasurer: Date:

Printed Names: Dylan Hennemann

PO Number (optional, see "liability"):

AGREEMENT FOR JOINT EXERCISE OF GOVERNMENTAL POWERS PURSUANT TO IOWA CODE CHAPTER 28E

AGREEMENT, made this 26th day of ____October_____, 2026 by and between the Sioux City Community School District (hereinafter "School District") and Northwest Area Education Agency (hereinafter "AEA"):

WHEREAS, the School District is a school corporation organized and existing pursuant to Iowa Code Chapter 274, which operates K through 12 schools, as provided by Iowa law; and

WHEREAS, AEA is a school corporation organized and existing pursuant to Iowa Code Chapter 273, which provides Title I Services; and

WHEREAS, both parties agree to an arrangement by which AEA will provide certain services to certain students of the School District under the Title I Program and both parties agree that such an arrangement should be memorialized in writing so that the respective obligations of each will be understood. This Agreement is intended to reduce the understanding of the parties to writing pursuant to Iowa Code sections 256.11(7) and 256B.2(3), and Iowa Code Chapter 28E, to meet the needs of the pupils.

In consideration of the mutual covenants and agreements herein contained the School District and AEA hereby agree as follows:

NOW, THEREFORE, IT IS HEREBY AGREED by and between Northwest Area Education Agency and the Sioux City Community School District pursuant to the provisions of Iowa Code Chapter 28E, as follows:

1. Purpose: The purpose of this agreement is to provide Title I services to youth residing in shelter care at Crittenton Center, using a portion of the required Title I Neglected set aside.

2. Duration: This agreement shall begin July 1, 2026 and end June 30, 2027.

3. Governance: No separate legal or administrative entity shall be created for the governance or administration of the terms or subject matter of this agreement. This agreement will be jointly administered by the Title I designee, Northwest Area Education Agency and the Title I Officer of the Sioux City Community School District.

4. Financing: The School District shall make available funds, not to exceed $63,493.60 to the AEA to be used only for service to Neglected students as authorized by law. The AEA shall keep an itemized statement of expenditures, which shall be made available to the School District at least annually or upon _five___ days' notice by the School District. The following costs shall be included in the AEA's itemized statement of expenditures:

(1) Salary and benefits paid to the instructional aides.
(2) Supplemental instructional supplies for the program.
(3) Indirect administrative costs at 1.90% on the total amount of costs associated with the contract.

5. Allocation of Duties of the Parties: The duties of the AEA shall be: (a) to conduct the supervisory and administrative tasks needed to effect the project; (b) insure the completion of project activities; (c) complete the project evaluation activities; (d) maintain and submit records and purchase requests as

required by the Title I staff of the Iowa Department of Education; and (e) submit an itemized statement of expenditures to the School District.

The duties of the School District shall be: (a) to maintain and submit records and reports as required by the Title I staff of the Iowa Department of Education; and (b) to collect from Iowa Department of Education the funds allotted for the operation of this project: and (c) approve Crittenton Title I requests.

6. Amendments: This agreement may be amended by the parties at any time by the adoption of the amendment by the Board of Directors of the School District and the Board of Directors of the AEA.

7. Termination: This agreement may be terminated by mutual agreement of the AEA and the School District. In the absence of mutual agreement, either the AEA or the School District may terminate this agreement effective at the end of any fiscal year by giving forty-five (45) days written notice to the other party prior to the end of the fiscal year. Notice of termination shall be sent by certified mail to the Secretary of the Board of the other party at the address listed below.

8. Personnel: The parties intend that the employees providing Title I services under this Agreement shall be employees of the AEA and not of the School District. The AEA employees are not agents or employees of the School District for any purpose. The School District is not responsible for deducting from payments to the AEA any amounts for taxes, insurance or other similar items relating to the AEA employees. Accordingly, AEA shall be responsible for payment of all salaries, employee benefits, payroll and other taxes, including by way of illustration but not limitation, federal and state income tax, social security tax, (FICA), unemployment insurance taxes (FUTA), any other taxes or business license fees as required, worker's compensation insurance, and other charges or insurance levied or required by federal, state or local statues, relating to the employment of AEA employees furnishing services hereunder. Northwest AEA shall further assume exclusive responsibility for the filing of all tax returns due to connection with all amounts paid to its employees under the terms of this Agreement.

If the notice is given to the School District:

Sioux City Community School District
627 4th St.
Sioux City, IA 51101

If the notice is given to the AEA:

Northwest Area Education Agency
5800 Discovery Blvd.
Sioux City IA 51111

THIS AGREEMENT has been approved by appropriate legislative action of the School District and the AEA and has been executed in Sioux City, Iowa, on this ____26th_____ day of ____October_____, 2026.

NORTHWEST AREA EDUCATION AGENCY	**SIOUX CITY COMMUNITY SCHOOL DISTRICT**
By: _____	By: _____
President	President of the Board of Directors
ATTEST:	
By: _____	By: _____
Secretary	Secretary of the Board of Directors

Sioux City Community School District
Executive Summary
Central Kitchen Food Service Agreements for Nutrition Services
October 26, 2026

Purpose:

To request approval from the Board of Directors for Nutrition Services to be provided to other entities.

Explanation:

Contact: Rich Luze (712) 279-6860
Ron Koch (712) 279-6651

Provide Nutrition Services and Supplies to Siouxland Mental Health.

This agreement is a revenue source for the School Nutrition Fund. The State and USDA encourage school districts to work together to provide services.

Impact on Student Achievement:

Providing safe food and services to the students and staff of the District.

Funding Source:

School Nutrition Fund

Priority:

Financial Health

Recommendation:

That the Board of Directors approves the agreements for Nutrition Services to Siouxland Mental Health.

Sioux City Community Schools
believe... achieve... succeed

Rich Luze | *Director of Food Service*
Food Service
3000 Hwy 75 North | Sioux City, IA 51105
Ph: 712-279-6860 | Cell: 712-203-1134
E: luzer@live.siouxcityschools.com
www.siouxcityschools.org

CONTRACTED SERVICES

and

NSLP/CACFP FOOD SERVICES AGREEMENT

Agreement number: & 97-6039

Food Service Agreement Between

School Food Service and Siouxland Mental Health Center

It is agreed between Siouxland Mental Health Center and the Sioux City Community School District Food Service Department.

The Sioux City Community School District Food Service Department will provide meals and supplies to Siouxland Mental Health Center beginning October 1,2026 and ending June 30, 2027.

The School District will provide meals that are nutritious, appetizing, and which follow and meet the wellness policy while adhering to the minimum requirements of the NSLP/CACFP and snack program. The menu plan will utilize and follow the Federal guidelines of the NSLP/CACFP meal plan. The Sioux City Community School District is also committed to "Buy American" whenever possible.

Siouxland Mental Health Center agrees to pay the Sioux City Community School District Food Service Department for the above-described services:

$5.65 Adult meals

Milk is billed separately.

In the event the Sioux City Community School District board determines it advisable and necessary to increase the per meal charges to the regular food service program of the Sioux City Community School District, a corresponding increase will be added to the Institution charge.

The Sioux City Community School District Food Service Department utilizes and follows all sanitation and preparation procedures in accordance with their HACCP plan. A copy of this plan will be provided by the Food Service Department.

Sioux City Community Schools
believe... achieve... succeed

Rich Luze | *Director of Food Service*
Food Service
3000 Hwy 75 North | Sioux City, IA 51105
Ph: 712-279-6860 | Cell: 712-203-1134
E: luzer@live.siouxcityschools.com
www.siouxcityschools.org

This agreement is cancelable by either party, by the presentation of one party or the other of thirty (30) days written notice. Neither party to this agreement shall be liable to the other for damages caused by cancellation pursuant to this agreement.

The term of this agreement shall be from October 1, 2026, to and including June 30, 2027.

Authorized Representative of Institution	**Title**	**Date Signed**
Authorized Representative of the District	**Title**	**Date Signed**

USDA Nondiscrimination Statement

(Revised 4-2-26)

In accordance with Federal civil rights law and U.S. Department of Agriculture (USDA) civil rights regulations and policies, the USDA, its Agencies, offices, and employees, and institutions participating in or administering USDA programs are prohibited from discriminating based on race, color, national origin, religion, sex, disability, age, marital status, family/parental status, income derived from a public assistance program, political beliefs, or reprisal or retaliation for prior civil rights activity, in any program or activity conducted or funded by USDA (not all bases apply to all programs).

Remedies and complaint filing deadlines vary by program or incident. Persons with disabilities who require alternative means of communication program information (e.g., Braille, large print, audiotape, American Sign Language, etc.) should contact the State or local Agency that administers the program or contact USDA through the Telecommunications Relay Service at 711 (voice and TTY). Additionally, program information may be made available in languages other than English.

To file a program discrimination complaint, complete the USDA Program Discrimination Complaint Form, AD3027, found online at How to File a Program Discrimination Complaint and at any USDA office or write a letter addressed to USDA and provide in the letter all of the information requested in the form. To request a copy of the complaint form, call (866) 632-9992. Submit your completed form or letter to USDA by:

1. mail:

Sioux City Community Schools
believe... achieve... succeed

Rich Luze | *Director of Food Service*
Food Service
3000 Hwy 75 North | Sioux City, IA 51105
Ph: 712-279-6860 | Cell: 712-203-1134
E: luzer@live.siouxcityschools.com
www.siouxcityschools.org

U.S. Department of Agriculture Office of the

Assistant Secretary for Civil Rights

1400 Independence Avenue, SW

Mail Stop 9410

Washington, DC 20250-9410; or

2. fax: 202) 690-7442; or

3. email: **program.intake@usda.gov**

Iowa Nondiscrimination Statement

It is the policy of this CNP provider not to discriminate on the basis of race, creed, color, sex, sexual orientation, national origin, disability, age, or religion in its programs, activities, or employment practices as required by the Iowa Code 216.6, 216.7, and 216.9. If you have questions or grievances related to compliance with this policy by this CNP Provider, contact the Iowa Civil Rights Commission, 6200 Park Ave, Suite 100, Des Moines, IA 50321; phone number 515081-4121 or 800-457-4416; website: **https://icrc.iowa.gov/**.

This institution is an equal opportunity provider.

Sioux City Community School District
Executive Summary
Food and Nutrition Refrigerated Display Case
October 26, 2026

Purpose:

To recommend award of the refrigerated display case(s) for the Sioux City Community School District Food and Nutrition Services.

Explanation:

Contact: **Ron Koch 712-279-6651**
Rich Luze 712-279-6860

Food Service strives to provide the most nutritious meals for students and staff. As per the RFP, it is our recommendation to award the bid to the following company:

- Refrigeration Engineering Inc. (REI)of Sioux City 3 units $43,633.66
- Martin Brother's Distributing 3 units $44,672.70
- Culinex Restaurant Supply 3 units $45,437.08
- Lawler Fixture of Sioux City No Bid

Impact on Student Achievement:

To provide breakfast and lunch meals for District students in compliance with nutritional standards.

.

Funding Source:

Food Service Nutrition Fund

Priority:

Recommendation:

That the Board of Directors awards the refrigerated display case(s) for the Sioux City Community School District Food and Nutrition Services to Refrigeration Engineering Inc. (REI) in the amount of $43,633.66.

ACE REFRIGERATION
REFRIGERATION ENGINEERING

Quote

10/01/2026

Project:
Sioux City Schools - Main
3000 Hwy 75
Sioux City, IA 51105

From:
Refrigeration Engineering - IA
Jon Rosenthal
2121 Floyd Blvd.
Sioux City, IA 51104-3333
(712)258-0179
(712)258-0179 (712) 258-0179 (Contact)
Jon@Chillmasters.biz

Item	Qty	Description	Sell	Sell Total
346	3 ea	**DISPLAY CASE, REFRIGERATED, SELF-SERVE**	13,127.55	39,382.65
		Federal Industries Model No. SSRPF5952 Specialty Display Prepared Foods Merchandiser, 59.2"W x 34.3"D x 52.3"H, self-contained refrigeration with PTC condensate evaporator, adjustable temperature control, 3500K LED horizontal top & shelf lights, (3) tiers adjustable solid black metal shelves, black display deck & black interior, black trim, tempered glass ends, choice of laminate, designed for continuous lineups, 1/2 HP, cULus, UL EPH Classified, Made In USA, DOE 2017 compliant Dimensions 52.3(h) x 59.2(w) x 34.3(d)		
	3 ea	One year parts & labor warranty, standard		
	3 ea	Self-contained refrigeration, standard		
	3 ea	230v/60/1-ph, 1/2 hp, 15.0 amps		
	3 ea	Cord & plug (six foot)	146.05	438.15
	3 ea	Five year compressor warranty, standard (for self-contained units only)		
	3 ea	Laminate standard color - Black		
	3 ea	Energy saving night curtain	211.07	<Optional>
	3 ea	Security night cover	639.62	<Alternate>
			ITEM TOTAL:	**39,820.80**
348	1 ea		1,600.00	1,600.00
		Federal Industries Model No. FREIGHT Freight, ground, LTL		
			ITEM TOTAL:	**1,600.00**

Item	Qty	Description	Sell	Sell Total
347	3 ea	**CUSTOM** Ace Refrigeration Model No. DELIVERY Delivery from Sioux City,Ia by Ace Refrigeration	98.00	294.00
			ITEM TOTAL:	**294.00**
			Total	41,714.80

Unless specified **prices do not include installation or delivery**. A **25% Restocking Fee** will be assessed on **all Special Order Returns**. All plumbing and electrical to be done by others. **All prices** are subject to **applicable tax** and **freight.** Unless noted ALL USED EQUIPMENT IS "**AS IS**". Starting 9/1/25 a **3%** charge will be added to all **Credit Card Transactions**

Quote

09/30/2026

Martin Bros.
DISTRIBUTING CO INC

To:
235900

Project:
Sioux City Comm School
3000 Hwy 75 N
Sioux City, IA 51105

From:
Martin Bros. Distributing
Jason Kloberdanz
312 Viking Rd
Cedar Falls, IA 50613
319-266-1775
(800)847-2404 (Contact)

Customer ID:111503 235900

Job Reference Number: 11189

A prepayment may be required prior to placing the order. A pre-payment invoice can be created upon request. If you have any questions regarding payment, please reach out to our credit department to discuss further. Deb Kroeze (319) 553-0456 or Michelle Even (319) 859-9841

Equipment will be delivered by common carrier. Unloading, uncrating,
inspected for damage before signing bill of lading and installation by owner. Martin Bros can not be held responsible for freight damage not
duly noted on the bill of lading. Installation quote available upon request.

Item	Qty	Description	Sell	Sell Total

14	3 ea	**DISPLAY CASE, REFRIGERATED, SELF-SERVE**	$13,353.98	$40,061.94
		Federal Industries Model No. SSRPF5952 Specialty Display Prepared Foods Merchandiser, 59.2"W x 34.3"D x 52.3"H, self-contained refrigeration with PTC condensate evaporator, adjustable temperature control, 3500K LED horizontal top & shelf lights, (3) tiers adjustable solid black metal shelves, black display deck & black interior, black trim, tempered glass ends, choice of laminate, designed for continuous lineups, 1/2 HP, cULus, UL EPH Classified, Made In USA, DOE 2017 compliant		
	3 ea	One year parts & labor warranty, standard		
	3 ea	Self-contained refrigeration, standard		
	3 ea	230v/60/1-ph, 1/2 hp, 15.0 amps		
	3 ea	Five year compressor warranty, standard (for self-contained units only)		
	3 ea	Laminate standard color - Black		
	3 ea	Casters (includes cord & plug) (for self-contained units only)	$526.84	$1,580.52
	3 ea	Security night cover	$660.08	$1,980.24
	3 ea	Note: This quotation is valid based on current tariff and import duty rates. In the event of any changes to applicable tariffs or import taxes following the date of this quote, we reserve the right to apply corresponding surcharges		
		Freight:	$350.00	$1,050.00
		ITEM TOTAL:		**$44,672.70**

Kamran & Company
Culinex | Atlas Restaurant Supply
Food Service Equipment Design, Sales, and Installation Experts

Quote

09/28/2026

To:
Culinex
Tim Waiter
1802 First Ave S
PO Box 2925
Fargo, ND 58108-2925
701-232-4428
(701) 383-9576 (Contact)

Project:
Sioux City Schools Federal Tim
Culinex Aug 2026

From:
The YES Group
Jason Mercil
1201 Mendota Heights Rd
Mendota Heights, MN 55120
(651)452-9889

Job Reference Number: 35198

Item	Qty	Description	Sell	Sell Total
1	3 ea	**DISPLAY CASE, REFRIGERATED, SELF-SERVE** Federal Industries Specialty Display Prepared Foods Merchandiser, 77.2"W x 34.3"D x 52.3"H, self-contained refrigeration with PTC condensate evaporator, adjustable temperature control, 3500K LED horizontal top & shelf lights, (3) tiers adjustable solid black metal shelves, black display deck & black interior, black trim, tempered glass ends, choice of laminate, designed for continuous lineups, 3/4 HP, cULus, UL EPH Classified, Made In USA, DOE 2017 compliant	$14,709.40	$44,128.20
	3 ea	One year parts & labor warranty, standard		
	3 ea	Self-contained refrigeration, standard		
	3 ea	230v/60/1-ph, 3/4 hp, 15.0 amps		
	3 ea	Cord & plug (six foot)	$154.97	$464.91
	3 ea	Five year compressor warranty, standard (for self-contained units only)		
	3 ea	Laminate standard color - Black		
	3 ea	Security night cover	$678.66	$2,035.98
	3 ea	Solid rear sliding access doors	$899.21	<Optional>
	3 ea	Note: This quotation is valid based on current tariff and import duty rates. In the event of any changes to applicable tariffs or import taxes following the date of this quote, we reserve the right to apply corresponding surcharges		
			ITEM TOTAL:	**$46,629.09**
2	3 ea	**DISPLAY CASE, REFRIGERATED, SELF-SERVE** Federal Industries Specialty Display Prepared Foods Merchandiser, 59.2"W x 34.3"D x 52.3"H, self-contained refrigeration with PTC condensate evaporator, adjustable temperature control, 3500K LED horizontal top & shelf lights, (3) tiers adjustable solid black metal shelves, black display deck & black interior, black trim, tempered glass	$13,928.73	<Alternate>

Item	Qty	Description	Sell	Sell Total
		ends, choice of laminate, designed for continuous lineups, 1/2 HP, cULus, UL EPH Classified, Made In USA, DOE 2017 compliant		
	3 ea	One year parts & labor warranty, standard		<Alternate>
	3 ea	Self-contained refrigeration, standard		<Alternate>
	3 ea	230v/60/1-ph, 1/2 hp, 15.0 amps		<Alternate>
	3 ea	Cord & plug (six foot)	$154.97	<Alternate>
	3 ea	Five year compressor warranty, standard (for self-contained units only)		<Alternate>
	3 ea	Laminate standard color - Black		<Alternate>
	3 ea	Security night cover	$678.66	<Alternate>
	3 ea	Solid rear sliding access doors	~~$899.21~~	<Alternate>
	3 ea	Note: This quotation is valid based on current tariff and import duty rates. In the event of any changes to applicable tariffs or import taxes following the date of this quote, we reserve the right to apply corresponding surcharges		<Alternate>
			ITEM TOTAL: <Alternate>	**$46,984.71**

Merchandise	~~$46,629.09~~
Freight	$1,150.00
Total	~~$47,779.09~~ 45,437.08

Centra Culinary Finance

Need to Finance this Purchase?

Apply here with our preferred finance partner.

Simple Finance Contract Payments as low as:

24-month term: **$2,139.19**
36-month term: **$1,475.28**
48-month term: **$1,144.13**
60-month term: **$946.08**

*Payments are subject to change based on credit approval.

Scan to Apply

Contact Us For More Info!

781-328-9511

culinaryfinance@centrafunding.com

- Soft Credit Pulls
- Instant Decisions Up to $25,000
- Start-up Rates Available

Sioux City Community Schools
believe... achieve... succeed

ATTACHMENT

Foodservice Department

3000 Highway 75
Sioux City Iowa, 51105
712-279-6860

To Our Suppliers: Failure to respond to this request for bid may result in the suspension of your firm's participation from the solicited items(s)/services. If your firm does not wish to propose a price for the solicited items/service, the "statement of no bid" must be signed and returned to the Foodservice Department of the Sioux City Community School District, by the bid due date in order to remain on the bidders list.

STATEMENT OF NO BID

Bid Number/Name _____ Opening Date _____

1. _____ Specifications too "tight", i.e. geared toward one (1) brand or manufacturer Only. (Explain below in remarks section)
2. _____ Specifications Unclear (Explain below in remarks section)
3. _____ We are unable to meet Specifications
4. _____ Insufficient time to respond
5. _____ Our Schedule will not permit us to perform with in the required time
6. _____ We are unable to meet bond requirements
7. _____ We are unable to meet insurance requirements
8. _____ Product not offered
9. X Remove us from your bidders list for this commodity, equipment or service
10. _____ Please keep our name on the bidders list for future reference
11. _____ Other (Explain Below)

Further Remarks: (e.g. Explanations of reason above)

Company: Lauter Fixtures Date: 9-28-2024

Name: Teresa Schuetz Title: VP

Signature: Teresa Schuetz

FEDERAL INDUSTRIES
A Standex Company
215 Federal Avenue
Belleville, WI 53508-9201
Phone: 800-356-4206
Fax: 608-424-3234
Email: geninfo@federalind.com
Website: www.federalind.com

The Signature of Quality®

Project Name: _____
Item #: _____
Model #: _____ Qty: _____
Approval: _____

AIA#

SIS#

SELF-SERVE REFRIGERATED PREPARED FOODS MERCHANDISER

Designed for those customers looking for up-market styling for maximum visual appeal that will drive product sales.

MODEL	DIMENSIONS (Includes End Panels)
☐ **SSRPF3652**	36.2 x 34.3 x 52.3 (in) 919 x 871 x 1328 (mm)
☐ **SSRPF5052**	50.2 x 34.3 x 52.3 (in) 1275 x 871 x 1328 (mm)
☒ **SSRPF5952**	59.2 x 34.3 x 52.3 (in) 1504 x 871 x 1328 (mm)
☐ **SSRPF7752**	77.2 x 34.3 x 52.3 (in) 1961 x 871 x 1328 (mm)



Model SSRPF5952 Shown

STANDARD FEATURES

Model Features
- Steel base construction with black laminated exterior. Other finishes optional.
- Black interior, glass end panels
- Easily accessible light and power switch
- Rear access to refrigeration system for quick and easy service
- The rear of the display needs to be 6" from wall.
- Adjustable leg levelers

Refrigeration
- On-demand PTC condensate evaporator provided for a totally self-contained system
- Electronic temperature controls maintain 38°-40° F with on-demand defrost. Note: Case temperature will vary if the air curtain is disrupted.
- Easy clean, rustproof insulated evaporator coil compartment
- R290 Refrigerant
- Thermometer

Shelving
- Three tiers adjustable metal shelves

Lighting
- LED top light and shelf lights **Agency**

Approvals
- UL and UL Sanitation listed
- DOE 2017 Compliant

OPTIONAL ACCESSORIES

- ☐ Stainless Steel Exterior
- ☐ Stainless Steel Top
- ☐ Reflective End Glass
- ☐ White Interior (Including Shelves)
- ☐ Stainless Steel Interior (Including Shelves)
- ☐ Special Exterior Finish
- ☐ Glass Shelves
- ☐ Stainless Steel Shelves
- ☐ Energy Saving Night Curtain
- ☐ Security Night Cover
- ☐ Solid Rear Sliding Access Doors
- ☐ Cord & Plug
- ☐ Remote Refrigeration (EEV Included)
- ☐ 4" and 2 1/2" Recessed Casters
- ☐ Condensate Pump
- ☐ Joining Kit for Continuous Line-ups
- ☐ Front Basket for Non-Refrigerated Merchandise
- ☐ 6" Legs
- ☐ Seismic Legs

Made in America

DOE 2017 Energy Efficiency Compliant

c UL us

ANSI/NSF 7

WARRANTY*
One year Parts and Labor
2nd thru 5th year part only service compressor
(U.S.A and Canada)

REVIT

Note: Information is subject to change at any time.
Visit www.federalind.com for the most current specs.

Revised 07/23/2025

AIA#	SELF-SERVE REFRIGERATED PREPARED FOODS MERCHANDISER
SIS#	Specifications

Intended Environment: Type I - Designed to operate in maximum ambient conditions of 75°F (24°C) and 55% relative humidity unless noted otherwise in system information below.		
Zone	**Intended Product To Be Displayed**	**Avg Prod Temp °F/°C**
All	Packaged Refrigerated Products	38°F / (3.3°C)

DIMENSION: xx"/(mm)

DIMENSION TOLERANCE +/- 0.25 (6.4)

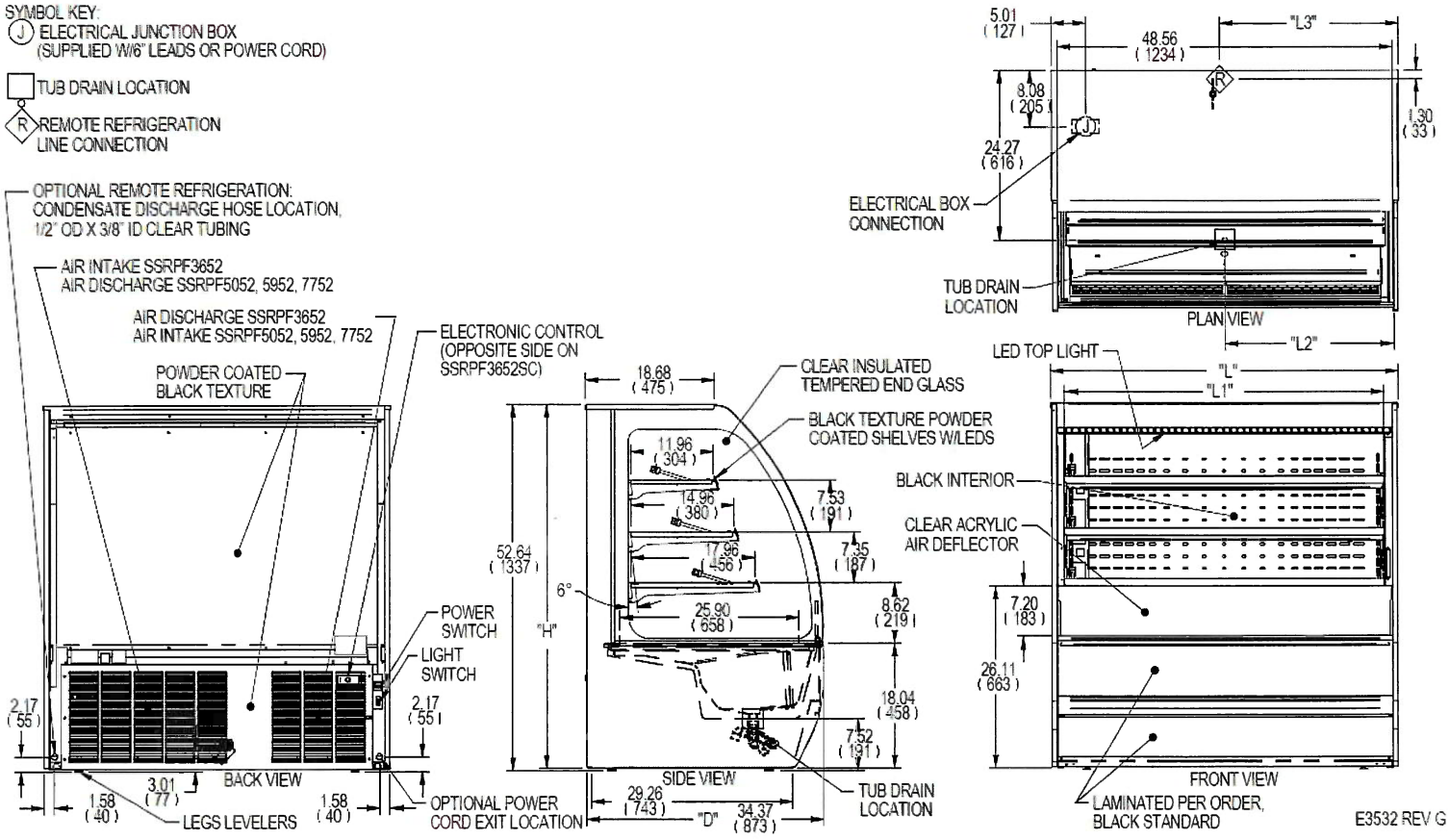

MODEL	DIMENSION L	D	H	L3	TUB DRAIN L2	SHELVING # OF TIERS	L1	INTERIOR VOLUME CU FT	SELF CONTAINED: PERMANENT CONNECT 2-WIRE + GROUND ELECTRICAL	AMPS	MAX FUSE SIZE	OPTIONAL NEMA CORD & PLUG 2-WIRE + GROUND	REFRIGERANT	CONDENSATE REMOVAL	SHIP WEIGHT LBS / KILO	REMOTE: PERMANENT CONNECT 2-WIRE + GROUND 120/60/1 AMPS	MAX FUSE SIZE	REFRIGERANT	BTU'S @+20°	CONDENSATE REMOVAL	SHIP WEIGHT LBS / KILO
	in	in	in	in	in		in														
	mm	mm	mm	mm	mm		mm								KILO						KILO
SSRPF3652	36.2	34.3	52.3	20.92	4.45	3	32.3	12.21	120/60/1	12.7	20	NEMA 5-20P	R290	CONDENSATE PAN	590 LBS	8.5	15	R449a	4,400	CONDENSATE PUMP	530 LBS
	919	871	1328	531	113		820								268 KILO						240 KILO
SSRPF5052	50.2	34.3	52.3	25.60	24.26	3	46.3	17.20	208-240/60/1	7	15	NEMA 6-15P	R290	CONDENSATE PAN	720 LBS	9.5	15	R449a	5,400	CONDENSATE PUMP	660 LBS
	1275	871	1328	650	616		1176								327 KILO						299 KILO
SSRPF5952	59.2	34.3	52.3	26.70	28.76	3	55.2	20.40	208-240/60/1	7.5	15	NEMA 6-15P	R290	CONDENSATE PAN	845 LBS	13.0	15	R449a	6,400	CONDENSATE PUMP	770 LBS
	1504	871	1328	678	730		1402								383 KILO						349 KILO
SSRPF7752	77.2	34.3	52.3	26.70	37.76	3	73.2	26.82	208-240/60/1	7.5	15	NEMA 6-15P	R290	CONDENSATE PAN	1010 LBS	13.5	15	R449a	7,400	CONDENSATE PUMP	935 LBS
	1961	871	1328	678	959		1859								458 KILO						424 KILO

- Case temperature will vary if the air curtain is disrupted.
- The rear of the unit needs to be 6" from a wall.
- Electrical Requirement - The minimum circuit ampacity and maximum fuse size is 20 amps.
- Refrigerated cases are designed to operate in a maximum of 75°F (24°C) ambient and 55% relative humidity.
- Due to continuing engineering improvements, specifications are subject to change without notice.

DOE 2017 Energy Efficiency Compliant

c UL us

ANSI/NSF 7

FEDERAL
The Signature of Quality®

FEDERAL INDUSTRIES
A Standex Company
215 Federal Avenue, Belleville, Wisconsin 53508-9201

Phone: 800-356-4206
Fax: 608-424-3234
Email: Geninfo@Federalind.com
Website: Federalind.com

FEDERAL INDUSTRIES — REFRIGERATED & NON-REFRIGERATED BAKERY, HOT & COLD DELI DISPLAYS

FEDERAL

The Signature of Quality™

STANDARD COLOR LAMINATES



Special color laminates are available at additional cost and may affect delivery schedule.

Due to variations in the printing process, color may not be exact match. Please contact the factory for samples.

a Standex company

Federal Industries • Standex Food Service • 215 Federal Avenue • Belleville, WI 53508-0290
800-356-4206 • FAX: 608-424-3234 • www.federalind.com

AIA#	SELF-SERVE REFRIGERATED PREPARED FOODS MERCHANDISER
SIS#	Specifications

Intended Environment: Type I - Designed to operate in maximum ambient conditions of 75°F (24°C) and 55% relative humidity unless noted otherwise in system information below.		
Zone	**Intended Product To Be Displayed**	**Avg Prod Temp °F/°C**
All	Packaged Refrigerated Products	38°F / (3.3°C)

DIMENSION: xx"/(mm)

DIMENSION TOLERANCE +/- 0.25 (6.4)

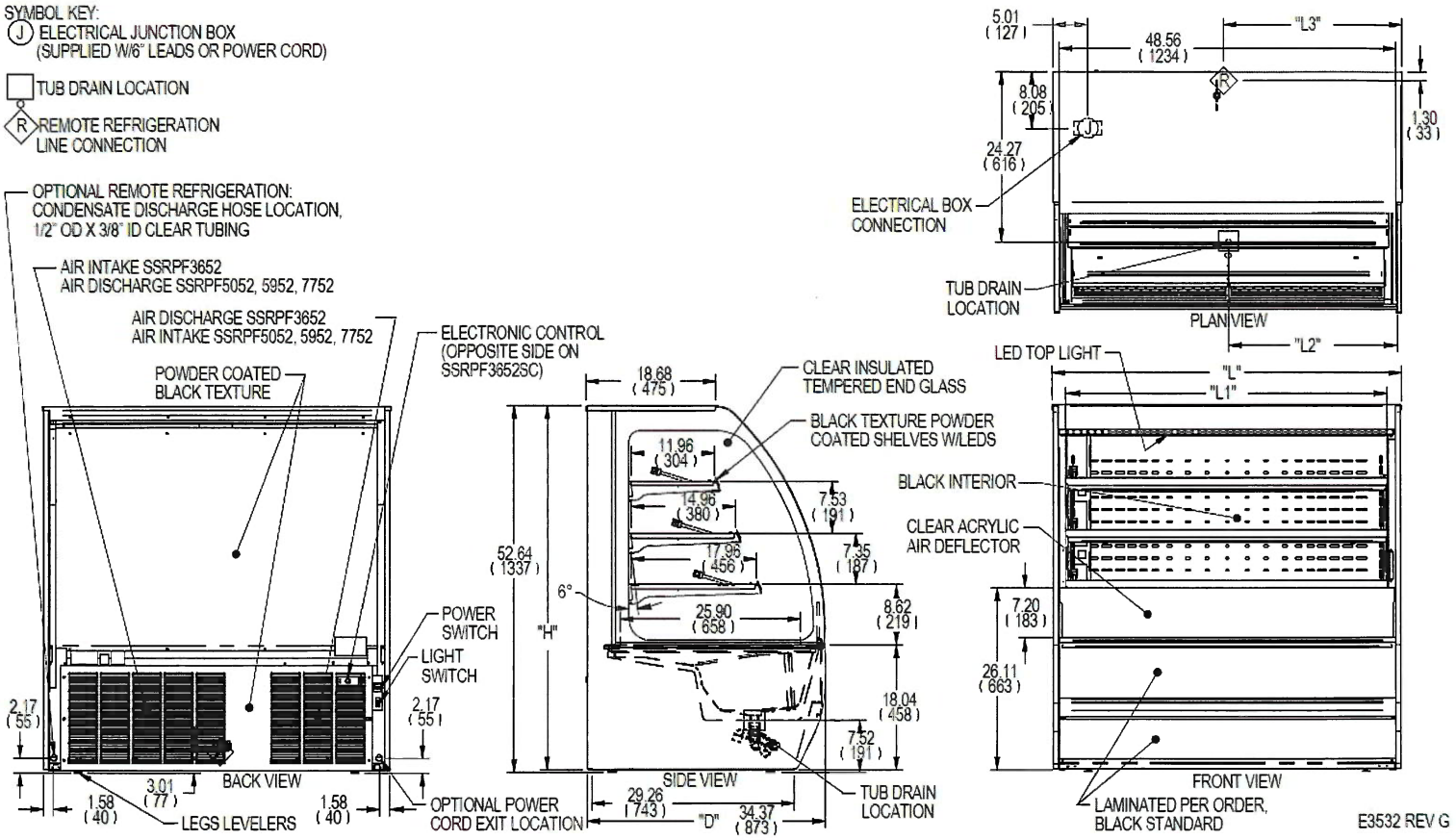

MODEL	DIMENSION L	D	H	L3	TUB DRAIN L2	SHELVING # OF TIERS	L1	INTERIOR VOLUME CU FT	SELF CONTAINED PERMANENT CONNECT 2-WIRE + GROUND ELECTRICAL	AMPS	MAX FUSE SIZE	OPTIONAL NEMA CORD & PLUG 2-WIRE + GROUND	REFRIGERANT	CONDENSATE REMOVAL	SHIP WEIGHT LBS	KILO	REMOTE PERMANENT CONNECT 2-WIRE + GROUND 120/60/1 AMPS	MAX FUSE SIZE	REFRIGERANT	BTU'S @+20°	CONDENSATE REMOVAL	SHIP WEIGHT LBS	KILO
	in	in	in	in	in		in																
	mm	mm	mm	mm	mm		mm																
SSRPF3652	36.2	34.3	52.3	20.92	4.45	3	32.3	12.21	120/60/1	12.7	20	NEMA 5-20P	R290	CONDENSATE PAN	590 LBS	268 KILO	8.5	15	R449a	4,400	CONDENSATE PUMP	530 LBS	240 KILO
	919	871	1328	531	113		820																
SSRPF5052	50.2	34.3	52.3	25.60	24.26	3	46.3	17.20	208-240/60/1	7	15	NEMA 6-15P	R290	CONDENSATE PAN	720 LBS	327 KILO	9.5	15	R449a	5,400	CONDENSATE PUMP	660 LBS	299 KILO
	1275	871	1328	650	616		1176																
SSRPF5952	59.2	34.3	52.3	26.70	28.76	3	55.2	20.40	208-240/60/1	7.5	15	NEMA 6-15P	R290	CONDENSATE PAN	845 LBS	383 KILO	13.0	15	R449a	6,400	CONDENSATE PUMP	770 LBS	349 KILO
	1504	871	1328	678	730		1402																
SSRPF7752	77.2	34.3	52.3	26.70	37.76	3	73.2	26.82	208-240/60/1	7.5	15	NEMA 6-15P	R290	CONDENSATE PAN	1010 LBS	458 KILO	13.5	15	R449a	7,400	CONDENSATE PUMP	935 LBS	424 KILO
	1961	871	1328	678	959		1859																

- Case temperature will vary if the air curtain is disrupted.
- The rear of the unit needs to be 6" from a wall.
- Electrical Requirement - The minimum circuit ampacity and maximum fuse size is 20 amps.
- Refrigerated cases are designed to operate in a maximum of 75°F (24°C) ambient and 55% relative humidity.
- Due to continuing engineering improvements, specifications are subject to change without notice.

DOE 2017 Energy Efficiency Compliant

c UL us

ANSI/NSF 7

FEDERAL
The Signature of Quality

FEDERAL INDUSTRIES
A Standex Company
215 Federal Avenue, Belleville, Wisconsin 53508-9201

Phone: 800-356-4206
Fax: 608-424-3234
Email: Geninfo@Federalind.com
Website: Federalind.com

Sioux City Community School District
Executive Summary
East and West High Elevator Project-Change Order 1
October 26, 2026

Purpose:

To approve the change order for the reduced cost of the elevator renovations at East and West High Schools from L & L Builders.

Explanation: **Contact: Ron Koch** 712-279-6651

The Board originally approved the East and West Elevator renovation in the amount of $612,000.00.

This change order provides a $41,670.00 reduction to the contracted amount, decreasing the original contract value of $612,000.00 to $570,330.00. The change results in a direct cost savings to the District with no additional expenditure required.

Impact on Student Achievement:

To update aging equipment across the District.

Priority:

Facility Planning

Funding Source:

Sales Tax

Recommendation:

That the Board of Directors approves the change order in the amount of $41,670.00, reducing the total contract amount to $570,330.00 to L & L Builders.

AIA® Document G701® – 2017

Change Order

PROJECT: *(Name and address)*
25137 Sioux City CSD- East & West High School Elevator Renovation

CONTRACT INFORMATION:
Contract For: General Construction

Date: 08-22-2025

CHANGE ORDER INFORMATION:
Change Order Number: 001

Date: 09-02-2026

OWNER: *(Name and address)*
Sioux City Community School District
2620 28th Street
Sioux City, IA 51101

ARCHITECT: *(Name and address)*
CMBA Architects
302 Jones StreetSuite 200
Sioux City, IA 51101

CONTRACTOR: *(Name and address)*
Story Construction Co.
dba L & L Builders
2205 4th St.
Sioux City, IA 51101

THE CONTRACT IS CHANGED AS FOLLOWS:
(Insert a detailed description of the change and, if applicable, attach or reference specific exhibits. Also include agreed upon adjustments attributable to executed Construction Change Directives.)

COR 001: Electrical Update	DEDUCT	($1,670.00)
COR 002: Grout Infill (West)	ADD	$735.00
COR 003: Pipe Insulation	DEDUCT	($735.00)
COR 004: Contingency Allowance	DEDUCT	($40,000.00)
	TOTAL	($41,670.00)

The original Contract Sum was	$	612,000.00
The net change by previously authorized Change Orders	$	0.00
The Contract Sum prior to this Change Order was	$	612,000.00
The Contract Sum will be decreased by this Change Order in the amount of	$	41,670.00
The new Contract Sum including this Change Order will be	$	570,330.00

The Contract Time will be unchanged by Zero (0) days.
The new date of Substantial Completion will be

NOTE: This Change Order does not include adjustments to the Contract Sum or Guaranteed Maximum Price, or the Contract Time, that have been authorized by Construction Change Directive until the cost and time have been agreed upon by both the Owner and Contractor, in which case a Change Order is executed to supersede the Construction Change Directive.

NOT VALID UNTIL SIGNED BY THE ARCHITECT, CONTRACTOR AND OWNER.

Signed by:
Brian N. Crichton
5AE5A0E4B0F34F9...
ARCHITECT *(Signature)*

BY: Brian Crichton, Principal Architect
(Printed name, title, and license number if required)

9/3/2026
Date

Signed by:
Jason Larsen
48152681B4E0421...
CONTRACTOR *(Signature)*

BY: Jason Larson
(Printed name and title)

9/9/2026
Date

OWNER *(Signature)*

BY: Treyla Lee, Board President
(Printed name and title)

Date

AIA Document G701 – 2017. Copyright © 1979, 1987, 2000 , 2001 and 2017. All rights reserved. "The American Institute of Architects," "American Institute of Architects," "AIA," the AIA Logo, and "AIA Contract Documents" are trademarks of The American Institute of Architects. This document was produced at 17:07:52 CDT on 09/03/2026 under Subscription No.20250091042 which expires on 01/17/2027, is not for resale, is licensed for one-time use only, and may only be used in accordance with the AIA Contract Documents® Terms of Service. To report copyright violations, e-mail docinfo@aiacontracts.com.
User Notes: (6a9820b2887f4a24688b9fcd)

Sioux City Community School District
Executive Summary
East and North Middle School Boiler Replacement Project
October 12, 2026

Purpose:

To accept the lowest responsive bids for the East and North Middle School Boiler Projects

Explanation: Contact: Ron Koch (712) 279-6651

Sealed bids were received and publicly opened on September 22, 2026, at the Educational Service Center (ESC) for the North and East Middle School Boiler Replacement Projects, which are included in the District's FY27 Capital Maintenance Plan.

The East Middle School project budget was established at $200,000.00, with the engineer's estimated construction cost established at $350,000.00. The lowest responsive base bid received was $330,720.00, submitted by C.W. Suter of Sioux City, Iowa. This bid is below the engineer's estimate.

The North Middle School project budget was established at $175,000.00, with the engineer's estimated construction cost established at $275,000.00. The lowest responsive base bid received was $246,480.00, submitted by C.W. Suter of Sioux City, Iowa. This bid is also below the engineer's estimate.

The scope of work for both projects consists primarily of the replacement of the existing boiler systems at East Middle School and North Middle School, in accordance with the plans and specifications prepared for the projects.

The District received four (4) responsive bids from qualified contractors for the projects. In addition, one (1) bid was determined to be non-responsive due to the bidder's failure to comply with the required bid-document requirements, specifically the failure to acknowledge Addendum No. 1. Addendum No. 1 was properly issued and communicated to the identified plan holders, vendors, and plan rooms through KCL Engineering.

The bid results are summarized below:

Vendor	**Bid Amount EMS**	**Bid amount NMS**
CW Suter – Sioux City IA	**$330,720.00**	**$246,480.00**
Midwest Mechanical – Sioux City IA	$341,430.00	$272,240.00
Redlinger – Watertown SD	$424,000.00	$310,000.00
Hander- Sioux Falls SD	$489,000.00	$312,840.00

Design Fees: East Middle School $37,500

Design Fees: North Middle School $16,500

Impact on Student Achievement:

To provide upgrades to District boilers.

Funding Source:

District Sales Tax

Priority:

Facilities Planning and Financial Health

Recommendation:

That the Board of Directors approves the award of the East Middle School and North Middle School Boiler Replacement Projects to C.W. Suter of Sioux City, Iowa, as the lowest responsive bidder, with a base bid of $330,720.00 for East Middle School and $246,480.00 for North Middle School, for a combined base bid amount of $577,200.00.

KCL ENGINEERING

300 4th Street
West Des Moines, IA 50265
515.724.7938

September 23, 2026

School Board
Sioux City Community Schools
627 4th St.
Sioux City, IA 51101

SUBJECT: **North Middle School Boiler replacement**
Sioux City, IA

BID RESULTS SUMMARY AND RECOMMENDATION

To the School Board:

Below please find a summary report and action recommendations for the above project based on the receipt of bids on September 22, 2026.

CONSULTING ENGINEERS

Mechanical
Electrical
Plumbing
Lighting
Technology

The scope of the construction projects includes replacement of the existing boilers at East Middle and North Middle schools. The District received valid bids from four (4) different contractors and 1 invalid bid for these projects. Vaild bids for North MS ranged in price from $246,480 to $312,840 and bids for East MS ranged from $330,720 to $489,000.

Valid bidders included: Hander, Suter, Redlinger, and Midwest Mechanical.

Based on the District's need to replace these Boilers through the RFP process, desirable bids were collected from reputable contractors. It is KCL's recommendation that the District accept the proposed valid low bid from Suter. Suters bids are as follows:

North MS Boiler Replacement: $246,480
East MS Boiler Replacement: $330,720

Thank you once again for your generous invitation to participate in this project.

Sincerely,

KCL Engineering, LLC



Eric Heynen, PE
Senior Electrical Engineer

KCL ENGINEERING

PROJECT NAME: Sioux City CSD East MS Boiler replacement
PROJECT NUMBER: 26210
DATE: 9/22/2026
LOCATION: DISTRICT OFFICE

ITEM	CONTRACTOR NAME				
	Hander - Sioux Falls SD.	MTC - Sioux City IA.	Suter - Sioux City IA	Redlinger Watertown SD	Midwest Mechanical - Sioux City IA
ENVELOPE #1 SIGNED BID FORM	YES / NO	YES / NO	YES / NO	YES / NO	YES / NO
Ack. Add. #1	YES / NO	YES / NO	YES / NO	YES / NO	YES / NO
Certification Form	YES / NO	YES / NO	YES / NO	YES / NO	YES / NO
ENVELOPE #2 BID SECURITY	YES / NO	YES / NO	YES / NO	YES / NO	YES / NO
CHECK ONE BELOW					
Bid Bond	☑	☑	☑	☑	☑
Cashiers Check (5%)	☐	☐	☐	☐	☐
BID	$489,000	$374,024	$330,720	$424,000	$341,430

KCL ENGINEERING

PROJECT NAME: Sioux City CSD North MS Boiler replacement
PROJECT NUMBER: 26211
DATE: 9/22/2026
LOCATION: DISTRICT OFFICE

ITEM	CONTRACTOR NAME				
	Hander - Sioux Falls SD	MTC - Sioux City IA	Suter - Sioux City IA	Redlinger Watertown SD	Midwest Mechanical - Sioux City IA
ENVELOPE #1 SIGNED BID FORM	YES / NO	YES / NO	YES / NO	YES / NO	YES / NO
Ack. Add. #1	YES / NO	YES / NO	YES / NO	YES / NO	YES / NO
Certification Form	YES / NO	YES / NO	YES / NO	YES / NO	YES / NO
ENVELOPE #2 BID SECURITY	YES / NO	YES / NO	YES / NO	YES / NO	YES / NO
CHECK ONE BELOW					
Bid Bond	☑	☑	☑	☑	☑
Cashiers Check (5%)	☐	☐	☐	☐	☐
BID	$312,840	$209,024	$246,480	$310,000	$272,240

Sioux City Community School District
Executive Summary
Pimloc Secure Redact
October 26, 2026

Purpose:

To approve the renewal agreement with Pimloc Secure Redact for redaction software that hides or removes sensitive information from video footage.

Explanation:

Contact: Ron Koch (712)279-6651

The District continues to receive requests for redacted videos, requiring a secure and efficient method of removing sensitive information prior to release. Pimloc Secure Redact is an AI-powered online platform that quickly and accurately redacts videos, significantly reducing the manpower and time required compared to traditional video editing software. The software also logs redaction and editing changes, enhancing the District's recordkeeping capabilities. To continue utilizing this service, the District would like to renew its annual agreement by purchasing 10 hours of service upfront for $2,850.00 at a discounted rate of $285.00 per hour. Additional hours, if needed beyond the first 12 hours of service, are available at $375.00 per hour.

Impact on Student Achievement:

The safety and security of our students and staff is a top priority. Video redaction software enhances the District's overall safety and security strategies.

Funding Source:

General Funds (O&M)

Priority:

N/A

Recommendation:

That the Board of Directors accepts the renewal agreement with Pimloc Secure Redact for redaction software for $2850.00.

SECURE REDACT RENEWAL AGREEMENT
Prepared for: Sioux City Community Schools
Renewal Date: 10/20/2026

RENEWAL SUMMARY
Thank you for your continued partnership with PIMLOC. We appreciate the opportunity to continue supporting Sioux City Community Schools with Secure Redact and helping your team efficiently manage media redaction, compliance requirements, and public records workflows throughout the upcoming contract term.

RENEWAL DETAILS

Term of Agreement	10/20/2026 - 10/19/2027
Payment Terms	Net 30
Annual Upload Allowance	10 hours
Additional Upload	$375 per hour above 12 hours
Annual Subscription Investment (+ applicable taxes)	$2850.00

CONTINUED ACCESS TO SECURE REDACT INCLUDES

✓ Automated media redaction
✓ Unlimited user access across your organization
✓ Unlimited secure storage for processed media
✓ Access to product updates and new features
✓ Technical support and customer success assistance
✓ Training and onboarding support as needed

Your renewal ensures continued access to Secure Redact, including all platform updates, enhancements, and future feature releases during your contract term.

YOUR PIMLOC CONTACT

Senior Solutions Manager: Hunter Skrzypek
Email: hunter.skrzypek@pimloc.com

TERMS & CONDITIONS
Full terms available at: secureredact.ai/usa-terms-of-service

Prepared By: Hunter Skrzypek

Accepted By:

Name: _____

Signature: _____

Date: _____

Name: _____

Signature: _____

Date: _____

secureredact
Powered by pimloc

Sioux City Community School District
627 4th St. Sioux City, Iowa 51101
712-279-6643

Board Policy Document

BOARD OF DIRECTORS

Series 200

Policy Title: Code of Ethics of the Board

Code Number: 200.7

Board members are public officials who should strive to perform all the duties of office in an ethical manner.

Board members should operate within the Code of Ethics established by the Iowa Association of School Boards, as reflected in Board Policy AR200.7.

See, AR200.7.

Policy Development	
First Adoption:	September 22, 1992
Reviewed Date:	October 17, 2023
Revision Adoption:	September 9, 1997/May 28, 2002/August 11, 2008/July 20, 2009/June 11, 2012 June 12, 2017/November 12, 2018/ November 13, 2023
Legal Reference:	Iowa Code §§ 21.6(3)(d); 68B; 69; 277.28; 279.7A, 279.8, 301.28 (2013)

Sioux City Community School District
627 4th St. Sioux City, Iowa 51101
712-279-6643

Board Policy Document

BOARD OF DIRECTORS

Series 200

Policy Title: Community / Advisory Committees

Code Number: 203.2

The standing advisory committees listed below shall have at least one, but not more than three, Board members. Members of the public will be appointed pursuant to the process outlined in AR 203.2:

- Building Oversight Committee (BOC)
  - The Building Oversight Committee reviews the plans and specifications of new buildings and building additions; makes recommendations on the value for resources spent and maintains cost efficiency on projects.
- Preschool Initiative Oversight Committee (PIOC)
  - The Preschool Initiative Oversight Committee is comprised of citizens who have an interest in early childhood. The committee supports and advises the preschool administrator in implementing the statewide voluntary preschool program.
- Sales Tax Finance Oversight Committee (STFOC)
  - The Sales Tax Finance Oversight Committee works to ensure fiscal responsibility of the district's use of the sales tax revenue received by the District and expenditures paid for Board of Education approved projects. The committee also prepares cash flow analysis, which is used to make a recommendation to the Board of Education on cash flow requirements.
- School Improvement Advisory Committee (SIAC)
  - This committee is a vehicle through which the community, students, parents, and school staff can make recommendations and assist the Board in determining the educational program~~work together to identify and recommend solutions to problems facing our District's school system~~.

The following advisory committee does not have Board member representation:

- School Building Advisory Committee (SBAC)
  - The School Building Advisory Committee was established by the School Board to address the condition of the District's facilities. It is a vehicle through which community members can work together to identify and recommend solutions to problems facing the District's school buildings.

Formatted

Formatted

Formatted

The committee listed below does not have Board member representation. The Board is responsible for appointing the administrator representatives to the committee each year. The administrator representatives should include district and building administrators from all levels.

- Teacher Quality Committee (TQC)
  - This committee consists of equal representation from teachers and administrators. The committee ~~ensures that~~works to facilitate teacher evaluations that are conducted fairly and consistently across the district, develops ~~evidence~~information aligned to the Iowa Teaching Standards that minimizes paperwork and focuses on professional growth, and makes recommendations on~~determines~~ the use and distribution of professional development funds based on district, building, and individual teacher professional development plans.

Policy Development

First Adoption:	October 13, 1992
Reviewed Date:	October 15, 2018/February 16, 2021/ May 20, 2025
Revision Adoption:	July 23, 1996/January 26, 2000/February 27, 2006/July 20, 2009/July 12, 2010/November 10, 2014/November 26, 2018/March 8, 2021/ June 23, 2025
Legal Reference:	Iowa Code §§ 21; 279.8; 280.12

4931-7310-2298-1\13440-079

Formatted: Font color: Text 1

Formatted: Normal,Paragraph, No bullets or numbering

Formatted: Font color: Text 1

Formatted: Bulleted + Level: 2 + Aligned at: 0.75" + Indent at: 1"

Formatted: Font: (Default) Arial, 8 pt

Sioux City Community School District
627 4th St. Sioux City, Iowa 51101
712-279-6643

Board Policy Document

NON-INSTRUCTIONAL OPERATIONS AND BUSINESS SERVICES

Series 700

Policy Title: Use of Recording Devices / Cameras on School Property

Code Number: 711

District-Generated Recordings/Images

The District believes in the importance of providing a safe and enriching learning environment for its students. The District uses digital recording devices on school property including school transportation vehicles to help protect the safety of students, employees and community members, and to safeguard District property which is funded using public resources. Additionally, District-generated recordings of students engaging in educational and extracurricular programs can be essential to promoting the value of public education with the school community.

In order to balance privacy and safety interests, no recording devices/cameras will be utilized on District property where individuals maintain a reasonable expectation of privacy. These areas include but are not limited to: school nurses' or other private offices, restrooms, locker rooms, changing areas, lactation spaces and employee break areas, or anywhere on District property when the intent or effect of such use is to bully, harass or embarrass another person.

Recordings of students have the potential to be considered education records. Any such recordings will be maintained and accessed in compliance with the requirements of the Family Education Rights and Privacy Act and the District's policy on student records.

Recordings will be digitally maintained and stored for an appropriate amount of time to maintain the safety of the educational environment and to safeguard District property, after which they will be destroyed or retained in accordance with District policy. The Superintendent or his/her designee will establish any necessary regulations related to the secure storage, maintenance, viewing and destruction of digital recordings.

Non-District Generated Recordings/Images

The use of non-District owned recording devices/cameras on school property and at school events will be regulated. Students, parents, volunteers, visitors, and community members will not be permitted to take photographs or recordings of students or employees during school hours unless authorized in advance by the Building Administrator. Students and employees found to violate this policy will be subject to disciplinary measures consistent with Board policy and applicable student and employee handbooks.

~~In addition, students violating this policy shall have their device confiscated and not returned until the end of the school day or after a parent/guardian conference has been held, if such a conference is determined necessary by the Building Administrator or his/her designee.~~ Students violating this policy may also be prohibited from possessing any smartphone or technology device on school property for a reasonable period of time, unless otherwise permitted by the Building Administrator or required by a student's IEP or 504 Plan.

It is important to foster a community spirit and sense of unity within the District. However, the District acknowledges that not every student or staff member feels comfortable or safe being photographed or recorded. On District property or at District-sponsored extracurricular events and activities, the use of non District owned recording devices may be addressed by administration, teachers, coaches or other school officials if a concern is made known to them. Any individual determined to be taking photographs or making recordings considered bothersome to students or staff or disruptive to the District's educational environment may be asked to stop, to destroy the image or recording and/or to leave the premises or event.

This policy will not be construed or enforced in a way that infringes on any activity otherwise protected by law.

Policy Development
First Adoption: November 8, 2021
Reviewed Date: October 19, 2021
Revision Adoption:
Legal Reference: 20 USC 1232
Iowa Code § 279.8

Formatted: Font: (Default) Arial, 8 pt