CITY OF SOUTH PASADENA
CITY COUNCIL

AGENDA

REGULAR COUNCIL MEETING
WEDNESDAY, JUNE 18, 2025, AT 7:00 PM

AMEDEE O. "DICK" RICHARDS JR. COUNCIL CHAMBERS
1424 MISSION STREET, SOUTH PASADENA, CALIFORNIA 91030

NOTICE ON PUBLIC PARTICIPATION & ACCESSIBILITY

The South Pasadena City Council Meeting will be conducted in-person from the Amedee O. "Dick" Richards, Jr. Council Chambers, located at 1424 Mission Street, South Pasadena, CA 91030.

Public participation may be made as follows:

- In-Person – Council Chambers, 1424 Mission Street, South Pasadena, CA 91030
- Live Broadcast via the City website – http://www.spectrumstream.com/streaming/south_pasadena/live.cfm
- Via Zoom – Meeting ID: **825 9999 2830**
- Written Public Comment – written comment must be submitted by 12:00 p.m. the day of the meeting by emailing to ccpubliccomment@southpasadenaca.gov
- Via Phone–+1-669-900-6833 and entering the Zoom Meeting ID listed above.

Meeting may be viewed at:

1. Go to the Zoom website, https://zoom.us/join and enter the Zoom Meeting information; or
2. Click on the following unique Zoom meeting link: https://us06web.zoom.us/j/82599992830 or
3. By calling: +1-669-900-6833 and entering the Zoom Meeting ID listed above; and viewing the meeting via http://www.spectrumstream.com/streaming/south_pasadena/live.cfm

CALL TO ORDER:	Mayor	Janet Braun
ROLL CALL:	Mayor	Janet Braun
	Mayor Pro Tem	Sheila Rossi
	Councilmember	Michael A. Cacciotti
	Councilmember	Jon Primuth
	Councilmember	Omari Ferguson
PLEDGE OF ALLEGIANCE:	Councilmember	Jon Primuth

PUBLIC COMMENT GUIDELINES

The City Council welcomes public input. Members of the public may comment on a non-agenda subject under the jurisdiction of the City Council or on an agenda item. Members of the public will have three minutes to address the City Council, however, the Mayor and City Council may adjust the time allotted, as needed.

Public Comments received in writing will not be read aloud at the meeting, but will be part of the meeting record. Written public comments will be uploaded to the City website for public viewing under Additional Documents. When submitting a public comment, please make sure to include the following:
1) Name (optional), and
2) Agenda item you are submitting public comment on.
3) Submit by no later than 12:00 p.m., on the day of the City Council meeting. Correspondence received after this time will be distributed the following business day.

PLEASE NOTE: The Mayor may exercise the Chair's discretion, subject to the approval of the majority of the City Council, to adjust public comment time limit to less than three minutes, as needed.

Pursuant to State law, the City Council may not discuss or take action on issues not on the meeting agenda, except that members of the City Council or staff may briefly respond to statements made or questions posed by persons exercising public testimony rights (Government Code Section 54954.2). Staff may be asked to follow up on such items.

CLOSED SESSION ANNOUNCEMENTS

1. CLOSED SESSION ANNOUNCEMENTS

PUBLIC COMMENT

2. PUBLIC COMMENT - GENERAL (NON-AGENDA ITEMS)

General Public Comment will be limited to 30 minutes at the beginning of the agenda. If there are speakers remaining in the queue, they will be heard at the end of the meeting. Only Speakers who submit a Public Comment card within the first 30 minutes of Public Comment period will be queued up to speak.

PRESENTATIONS

3. MERCHANT MINUTE - CHUCK'S APPLIANCES

CHANGES TO THE AGENDA

4. REORDERING OF, ADDITIONS, OR DELETIONS TO THE AGENDA

CONSENT CALENDAR

OPPORTUNITY TO COMMENT ON CONSENT CALENDAR

Items listed under the Consent Calendar are considered by the City Manager to be routine in nature and will be enacted by one motion unless a public comment has been received or Councilmember requests otherwise, in which case the item will be removed for separate consideration. Any motion relating to an ordinance or a resolution shall also waive the reading of the ordinance or resolution and include its introduction or adoption as appropriate.

5. **CONSIDERATION OF THE APPROVAL OF PREPAID WARRANTS IN THE AMOUNT OF $119,349.28; GENERAL CITY WARRANTS FOR $1,026,709.13; ONLINE PAYMENTS IN THE AMOUNT OF $18,257.04; VOIDS IN THE AMOUNT OF ($90.97); PAYROLL IN THE AMOUNT OF $ 910,772.95**

Recommendation
It is recommended that the City Council approve the Warrants as presented.

6. **CONSIDERATION OF APPROVAL OF THE THIRD AMENDMENT TO THE PROFESSIONAL SERVICES AGREEMENT WITH MNJ ADVISORS, INC. FOR TEMPORARY STAFFING SERVICES, IN THE AMOUNT OF $35,000 FOR A NEW TOTAL NOT-TO-EXCEED AMOUNT OF $135,000 AND TO EXTEND THE TERMINATION DATE**

Recommendation
It is recommended that the City Council consider approving the proposed Third Amendment to the Professional Services Agreement with MNJ Advisors, Inc., to extend the agreement through August 15, 2025, and increase the compensation in the amount of $35,000 for continued temporary staffing services, for a new total not-to-exceed compensation amount of $135,000.

7. **CONSIDERATION OF APPROVAL OF THE SPECIAL JOINT CITY COUNCIL AND FINANCE COMMISSION MEETING MINUTES AND REGULAR CITY COUNCIL MEETING MINUTES FOR JUNE 4, 2025**

Recommendation
It is recommended that the City Council approve the minutes from the Special Joint City Council and Finance Commission Meeting and Regular City Council Meeting held on June 4, 2025.

8. **CONSIDER THE APPROVAL OF A TASK ORDER WITH NV5 FOR PROJECT, CONSTRUCTION AND INSPECTION MANAGEMENT SERVICES FOR THE FISCAL YEAR 2024-2025 RESIDENTIAL SLURRY SEAL PROJECT**

Recommendation
It is recommended that the City Council approve the Task Order under an existing Master On-Call Professional Services Agreement with NV5,in the final form approved by the City Attorney, to provide project management, construction management, and inspection management services for the City's Fiscal Year 2024-2025 Residential Slurry Seal Project (Project) in the not-to-exceed amount of $119,010.

9. **CONSIDER APPROVAL OF A TASK ORDER WITH NV5 FOR FY 19-20 STREET IMPROVEMENT PROJECT CONSTRUCTION AND INSPECTION MANAGEMENT SERVICES**

Recommendation
It is recommended that the City Council approve the Task Order under a Master On-Call Professional Services Agreement with NV5,in the final form approved by the City Attorney, to provide project management, construction management, and inspection management services for the City's Fiscal Year 19-20 Street Improvement Project in the

not-to-exceed amount of $273,680.00.

10. CONSIDERATION OF ADOPTION OF AN ORDINANCE OF THE CITY OF SOUTH PASADENA AMENDING ARTICLE IVH (CULTURAL HERITAGE COMMISSION) OF CHAPTER 2 OF THE SOUTH PASADENA MUNICIPAL CODE TO REQUIRE A POSTED ON-SITE NOTICE FOR HEARINGS; EXTENDING THE EXPIRATION DATE FOR CERTIFICATES OF APPROPRIATENESS FROM 18 TO 24 MONTHS; INCREASING MINOR PROJECT REVIEW THRESHOLDS FOR CHAIR REVIEW; AND UPDATING LANGUAGE FOR CONSISTENCY AND CLARIFICATION

Recommendation

It is recommended that the City Council adopt the ordinance amending Article IVH (Cultural Heritage Commission of Chapter 2 (Administration) of the South Pasadena Municipal Code to make administrative processing improvements for certificates of appropriateness, increase public noticing and remove language inconsistencies.

11. CONSIDERATION OF A RESOLUTION APPROVING THE SALARY ADJUSTMENT AND UPDATED SALARY RANGE FOR THE CIVIL ENGINEERING ASSISTANT, SENIOR CIVIL ENGINEER, AND SENIOR HUMAN RESOURCES ANALYST AND APPROVING THE ALLOCATION OF FUNDS FROM MULTIPLE FUNDS AND VACANT POSITIONS TO SUPPORT THE PERSONNEL REQUESTS

Recommendation

It is recommended that the City Council consider adoption of the proposed Resolution to:

1. Approve the salary adjustment and updated salary range for the Civil Engineering Assistant;
2. Approve the salary adjustment and updated salary range for the Senior Civil Engineer;
3. Approve the salary adjustment and updated salary range for the Senior Human Resources Analyst; and
4. Authorize the allocation of funds from the Special/Enterprise Funds and the General Fund to support the changes.

12. CONSIDERATION OF APPROVAL OF AN AMENDMENT TO A PROFESSIONAL SERVICES AGREEMENT WITH KOA CORPORATION, A LOCHNER COMPANY, FOR ENGINEERING DESIGN SERVICES RELATED TO THE NORTH-SOUTH CORRIDOR INTELLIGENT TRANSPORTATION SYSTEM (ITS) DEPLOYMENT PROJECT IN A NOT TO EXCEED AMOUNT OF $1,137,574

Recommendation

It is recommended that the City Council consider approval of an amendment (Attachment 1) of an existing Professional Services Agreement (Attachment 2) with KOA Corporation, a Lochner Company, to provide engineering design services to support the City's North-South Corridor Intelligent Transportation System (ITS) Deployment Project, Project No. 002002 (2020-02), Federal Project No. RABA01-5071(024), in a not-to-exceed amount of $1,137,574.

13. CONSIDERATION OF A LETTER OPPOSING SENATE BILL 79 (WIENER) TRANSIT-ORIENTED DEVELOPMENT

Recommendation

Authorize the Mayor to send a letter of opposition to Senate Bill 79 (Wiener) Transit-Oriented Development on behalf of the City Council to the appropriate stated legislators.

14. CONSIDERATION OF AN ORDINANCE OF THE CITY COUNCIL OF THE CITY OF SOUTH PASADENA, CALIFORNIA, AMENDING ARTICLE 7 (DEFINITIONS) OF CHAPTER 36 (ZONING) OF THE SOUTH PASADENA MUNICIPAL CODE TO AMEND THE DEFINITION OF "CITY ENGINEER"

Recommendation

It is recommended that the City Council introduce the ordinance by title only and waive full reading of the ordinance amending Article 7 (Definitions) of Chapter 36 (Zoning) of the South Pasadena Municipal Code.

15. CONSIDERATION OF APPROVAL OF AN AMENDMENT TO THE PROFESSIONAL SERVICES AGREEMENT WITH ROBERT HALF INTERNATIONAL INC., FOR MUNICIPAL STAFFING SERVICES IN AN AMOUNT NOT-TO-EXCEED $57,000 FOR A NEW TOTAL-NOT-TO-EXCEED AMOUNT OF $168,000 AND TO EXTEND THE AGREEMENT THROUGH DECEMBER 31, 2025

Recommendation

It is recommended that the City Council consider approval of an Amendment to the Professional Services Agreement with Robert Half International, Inc., to extend the agreement through December 31, 2025, and increase the compensation in the amount of $57,000 and for a new total not -to-exceed amount of $168,000.

16. CONSIDERATION OF APPROVAL OF REVISED FISCAL YEAR 2025-2026 BUDGET DEVELOPMENT CALENDAR

Recommendation

It is recommended that the City Council approve the proposed revised Fiscal Year 2025-2026 Budget Development Calendar.

17. CONSIDERATION TO APPROVE THE FIRST AMENDMENT TO THE PROFESSIONAL SERVICES AGREEMENT WITH LAKEVIEW CONSULTING, LLC., FOR TEMPORARY STAFFING SERVICES, AT A COST OF $18,000 FOR A NEW TOTAL NOT-TO-EXCEED AMOUNT OF $48,000, AND EXTENDING THE AGREEMENT THROUGH JULY 31, 2025

Recommendation

It is recommended that the City Council consider approving the proposed First Amendment to the Professional Services Agreement with Lakeview Consulting, LLC., in the amount of $18,000, for continued temporary staffing services, for a new total not-to-exceed compensation amount of $48,000, and extending the agreement through July 31, 2025.

18. CONSIDER THE ADOPTION OF A RESOLUTION APPROVING A NEW FUND BALANCE POLICY IN ACCORDANCE WITH GOVERNMENTAL ACCOUNTING STANDARDS BOARD STATEMENT NO. 54

Recommendation
It is recommended that the City Council review and adopt the resolution approving a new Fund Balance Policy in accordance with Governmental Accounting Standards Board Statement No. 54

19. CONSIDERATION OF APPROVAL OF AN AMENDMENT TO THE AGREEMENT WITH CALIFORNIA METRO PATROL FOR SECURITY GUARD SERVICES TO EXTEND THE AGREEMENT TERM TO SEPTEMBER 30, 2025

Recommendation
It is recommended that the City Council consider approving the amendment to the agreement with California Metro Patrol for security guard services to extend the agreement term to September 30, 2025.

20. CONSIDER APPROVAL OF A TASK ORDER WITH NV5 FOR CAPITAL IMPROVEMENT PROGRAM STAFF AUGMENTATION SERVICES FOR DESIGN AND PROJECT MANAGEMENT SERVICES IN THE AMOUNT NOT TO EXCEED $380,000.

Recommendation
It is recommended that the City Council approve the Task Order under a Master On-Call Professional Services Agreement with NV5,in the final form approved by the City Attorney, to provide civil engineer design and project management services for the City's Fiscal Year 25-26 Street Improvement Project in the not-to-exceed amount of $380,000.

21. CONSIDERATION OF APPROVAL OF AN AMENDMENT TO THE AGREEMENT WITH ACORN TECHNOLOGY SERVICES FOR INFORMATION TECHNOLOGY SUPPORT SERVICES TO EXTEND THE TERM TO SEPTEMBER 30, 2025

Recommendation
It is recommended that the City Council consider the approval of an amendment to the agreement with Acorn Technology Services, extending the term to September 30, 2025.

22. CONSIDERATION OF APPROVAL OF AN AMENDMENT TO THE PROFESSIONAL SERVICES AGREEMENT WITH WBCP INC., FOR RECRUITMENT SEARCH SERVICES, IN THE AMOUNT NOT TO EXCEED OF $30,200, FOR A NEW TOTAL CONTRACT AMOUNT OF $45,600

Recommendation
It is recommended that the City Council consider approval of the proposed amendment to the professional services agreement with WBCP Inc., to amend the compensation for recruitment search services for the Accounting Manager-Controller and two engineering positions in an amount not to exceed of $30,200, for a new total contract amount of $45,600.

PUBLIC HEARING

23. CONSIDERATION OF ADOPTION OF A RESOLUTION TO ESTABLISH NEW PLANNING APPLICATION FEES AND MODIFICATIONS TO EXISTING PLANNING FEES AS SET FORTH IN THE CITY'S MASTER FEE SCHEDULE RELATED TO DESIGN REVIEW AND OTHER FEES RELATED TO DEVELOPMENT

Recommendation

It is recommended that the City Council consider adopting the proposed Resolution to adopt the new and modified planning application fees for the Community Development Department (Planning Division).

24. CONSIDERATION OF ADOPTION OF A RESOLUTION APPROVING THE FISCAL YEAR 2025-2026 ANNUAL CAPITAL IMPROVEMENT PROGRAM AND BUDGET AND APPROVING THE FISCAL YEAR 2025-2026 THROUGH 2029-2030 CAPITAL IMPROVEMENT PROGRAM

Recommendation

It is recommended that the City Council consider adopting a Resolution approving the Fiscal Year 2025-26 annual Capital Budgets and approving the Fiscal Year 2025-26 through 2029-2030 Five-Year Capital Improvement Program (CIP), making a finding of consistency with the City's General Plan.

ACTION/DISCUSSION

25. CONSIDERATION OF AN AWARD OF A CONSTRUCTION CONTRACT WITH GENTRY BROTHERS, INC. IN AN AMOUNT NOT TO EXCEED $ 7,574,000 FOR THE FY19-20 STREET IMPROVEMENT PROJECT AND APPROVE THE PLANS AND SPECIFICATIONS FOR THE PROJECT

Recommendation

It is recommended that the City Council consider:

1. Approving the plans and specifications for the Street Improvements Project (Project); and
2. Awarding a construction contract to Gentry Brothers, Inc. for construction services for street improvements in an amount not to exceed $7,589,040.00, including the proposed bid amount of $6,885,400.00 and a contingency of $703,640.00; and
3. Reject all other bids received; and
4. Authorize the City Manager to execute the contract.

26. PUBLIC HEARING TO RECEIVE THE ANNUAL REPORT ON WORKFORCE VACANCIES, RECRUITMENT AND RETENTION IN COMPLIANCE WITH ASSEMBLY BILL 2561

Recommendation

It is recommend that the City Council open the public hearing and receive and file the annual report.

27. CONSIDERATION OF RESOLUTIONS APPROVING A LETTER OF AGREEMENT BETWEEN THE CITY OF SOUTH PASADENA AND THE SOUTH PASADENA FIREFIGHTERS' ASSOCIATION; APPROVING A LETTER BETWEEN THE CITY OF SOUTH PASADENA AND THE SOUTH PASADENA POLICE OFFICERS' ASSOCIATION; APPROVING A LETTER BETWEEN THE CITY OF SOUTH PASADENA AND THE PUBLIC SERVICE EMPLOYEES' ASSOCIATION; APPROVING A LETTER BETWEEN THE CITY OF SOUTH PASADENA AND THE PART-TIME PUBLIC SERVICE EMPLOYEES' ASSOCIATION; AND APPROVING A LETTER OF

AGREEMENT BETWEEN THE CITY OF SOUTH PASADENA AND UNREPRESENTED MANAGEMENT GROUP

Recommendation

It is recommended that the City Council consider:

1. Authorize an extension of the current Memorandum of Understanding (MOU) and Benefits Summary for the following five (5) employee groups: South Pasadena Firefighters' Association, South Pasadena Police Officers' Association, South Pasadena Public Service Employees' Association, South Pasadena Part-Time Public Service Employees' Association and Unrepresented Management from June 30, 2025 to December 31, 2025;
2. Approve a 2% salary increase for the identified employee groups, effective July 1, 2025;
3. Adopt the Resolutions approving the side Letter of Agreements between the City and the identified employee groups; and
4. Authorize the City Manager to execute the Letters of Agreement.

PUBLIC COMMENT - CONTINUED

28. CONTINUED PUBLIC COMMENT - GENERAL

This time is reserved for speakers in the Public Comment queue not heard during the first 30 minutes of Item No. 2. No new speakers will be accepted at this time.

COMMUNICATIONS

29. COUNCILMEMBER COMMUNICATIONS

The time allotted to speak per Councilmember is three minutes. Additional time will be allotted at the end of the City Council meeting agenda, if necessary.

30. CITY MANAGER COMMUNICATIONS

ADJOURNMENT

FOR YOUR INFORMATION

FUTURE CITY COUNCIL MEETINGS

July 2, 2025	Regular City Council Meeting (Cancelled)	7:00 PM
July 16, 2025	Regular City Council Meeting	7:00 PM

PUBLIC ACCESS TO AGENDA DOCUMENTS AND BROADCASTING OF MEETINGS

City Council meeting agenda packets, any agenda related documents, and additional documents are available at City Hall and online for public viewing on the City's website: https://www.southpasadenaca.gov/Your-Government/Your-City-Council/City-Council-Agendas

Regular meetings are live streamed via the internet at:
http://www.spectrumstream.com/streaming/south_pasadena/live.cfm

AGENDA NOTIFICATION SUBSCRIPTION

If you wish to receive an agenda email notification please contact the City Clerk's Division via email at CityClerk@southpasadenaca.gov or call (626) 403-7230.

ACCOMMODATIONS

The City of South Pasadena wishes to make all of its public meetings accessible to the public. If special assistance is needed to participate in this meeting, please contact the City Clerk's Division at (626) 403-7230 or cityclerk@southpasadenaca.gov. Upon request, this agenda will be made available in appropriate alternative formats to persons with disabilities. Notification at least 48 hours prior to the meeting will assist staff in assuring that reasonable arrangements can be made to provide accessibility to the meeting (28 CFR 35.102-35.104 ADA Title II).

CERTIFICATION OF POSTING

I declare under penalty of perjury that I posted this notice of agenda for the meeting to be held on June 18, 2025, on the bulletin board in the courtyard of City Hall located at 1414 Mission Street, South Pasadena, CA 91030, and on the City, website as required by law, on the date listed below.

06/12/2025	/S/
Date	Hector Gomez, Chief City Clerk

City Council Agenda Report

ITEM NO. 3

DATE: June 18, 2025

FROM: Todd Hileman, City Manager

PREPARED BY: Mark Perez, Deputy City Clerk

SUBJECT: **MERCHANT MINUTE - CHUCK'S APPLIANCES**

Attachment:
Attachment No. 1 - Chuck's Appliances PowerPoint


CHUCK'S
APPLIANCE & SERVICE
SALES · PARTS · REPAIRS
917 FAIR OAKS AVENUE


Chuck's Appliance
Service Inc.
SALES · SERVICE · PARTS
917 Fair Oaks Ave. · So. Pasadena, CA 91030
PHONE: 626.792.1231 · 626.796.3986 FAX: 626.441.1675
Email: caspas1@gmail.com











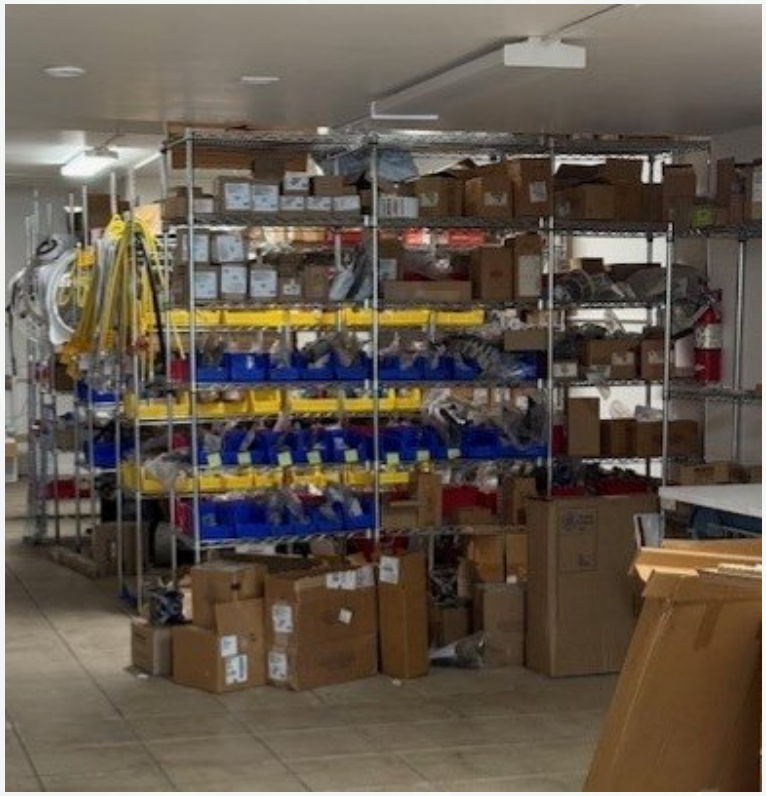

Repairs and Parts

City Council Agenda Report

ITEM NO. 5

DATE: June 18, 2025

FROM: Todd Hileman, City Manager

PREPARED BY: William Castrillon, Budget & Purchasing Manager

SUBJECT: **CONSIDERATION OF THE APPROVAL OF PREPAID WARRANTS IN THE AMOUNT OF $119,349.28; GENERAL CITY WARRANTS FOR $1,026,709.13; ONLINE PAYMENTS IN THE AMOUNT OF $18,257.04; VOIDS IN THE AMOUNT OF ($90.97); PAYROLL IN THE AMOUNT OF $ 910,772.95**

Recommendation
It is recommended that the City Council approve the Warrants as presented.

Executive Summary
Prepaid Warrants:
Warrant # 321379-321422: $80,067.55
ACH: $39,281.73
Voids: **$0**
General City Warrants
Warrant # 321423-321490: $754,893.16
ACH: **$271,815.97**
Voids: **($90.97)**
Payroll Period Ending 06/06/2025: **$910,772.95**
Online Payments: **$18,257.04**

Total: **$2,074,997.43**

Key Performance Indicators and Strategic Plan
This item is in line with the Finance Department's Key Performance Indicators identified in the Fiscal Year 2024-2025 Budget. The Accounts Payable process is completely digital and routed via a workflow process. This cuts down staff time significantly, as well as streamlines a previously strenuous process. This process also falls in line with the City's environmental strategies by reducing the amount of paper used.

Explanation of Terms
Warrant – Directs the Finance Department to pay a sum of money out of the City's funds to bearer of claim/invoice (named individual, company) also known as a payable. The warrants (payments) are only released after City Council approval.

Warrant Summary – Summarizes all of the payments prepared during a specific cycle. The beginning of the cycle is the period after the last set of warrants were approved by Council and

released as payment. The end of the cycle is the last date of invoice processing. All the warrants for the current cycle are summarized and the detail of warrants provided to Council for review and approval.

Prepaid Warrant List - A Prepaid Warrant directs the Finance Department to pay a sum of money out of the City's funds to bearer of claim/invoice (named individual, company) also known as a payable. The Prepaid Warrants (payments) are released prior to City Council approval, however reported to City Council as a Prepaid. Prepayments are generally time sensitive and would incur additional charges if not paid within a specific time frame.

General City Warrant List – Detailed listing of all payments made for a specific cycle. The beginning of the cycle is the period after the last set of warrants were approved by Council and released as payment. The end of the cycle is the last date of invoice processing.
Online Payments – Payments made online. These are typically for time sensitive utilities, credit card payments, and sometimes require the use of the payee's portal (SCE, So Cal Gas, Amazon, etc.).

Voids – Checks that were issued and voided. Examples of such instances would be lost checks that were mailed out. Checks that were on a warrant that did not get approved by Council.

Payroll – All payments made related to payroll, such as payroll taxes, retirement benefits, CalPERS, Garnishments, payroll etc.

Attachment:
Attachment No. 1 - Warrant Summary
Attachment No. 2 - Prepayment Warrant Summary
Attachment No. 3 - General Warrant Summary
Attachment No. 4 - Online Payment Report
Attachment No. 5 - Payroll Report
Attachment No. 6 - Voids

City of South Pasadena
Demand/Warrant Register

Recap by fund	**Fund No.**	**Date** 6/18/2025 **Amounts**	
		Prepaid	**Written**
General Fund	101	97,219.96	433,213.71
Insurance Fund	103	-	-
Street Improvement Program	104	-	-
Technology Surcharge Fund	106	-	-
Facilities & Equip.Cap. Fund	105	-	-
Programs and Projects	107	-	-
Special Projects Fund	116		-
Local Transit Return "A"	205	1,104.70	2,177.14
SLFRF Fund	206	-	-
Local Transit Return "C"	207	-	-
TEA/Metro	208	-	-
Sewer Fund	210	1,396.05	19,701.76
CTC Traffic Improvement	211	-	-
SB2 Planning Grant	213	-	-
Rogan HR5294 Grant	214	-	-
Street Lighting Fund	215	5,515.17	51,433.75
Public, Education & Govt Fund	217	-	-
Clean Air Act Fund	218	-	-
Business Improvement Tax	220	-	-
Gold Line Mitigation Fund	223	-	-
Mission Meridian Public Garage	226	-	-
Housing Authority Fund	228	-	-
State Gas Tax	230	2,790.90	24,311.39
County Park Bond Fund	232	1,520.78	-
Measure R	233	-	-
Measure M	236	-	-
Road Maint & Rehab (SB1)	237	-	-
MSRC Grant Fund	238	-	-
Measure W	239	770.10	-
Measure H	241	-	-
Prop C Exchange Fund	242	-	-
Bike & Pedestrian Paths	245	-	-
BTA Grants	248	-	-
Golden Street Grant	249	-	-
Capital Growth Fund	255	-	-
CDBG	260	-	-
OTS Grant	269	-	-
Asset Forfeiture	270	-	-
Police Grants - State	272	-	-
Homeland Security Grant	274	-	-
Park Impact Fees	275	-	-
Historic Preservation Grant	276	-	-
HSIP Grant	277	-	-
Arroyo Seco Golf Course	295	-	-
Sewer Capital Projects Fund	310	-	-
400 Capital Improvement Program	400	-	428,315.76
Water Fund	500	2,662.78	50,730.34
Water Efficiency Fund	503	980.00	3,150.00
2016 Water Revenue Bonds Fund	505	-	-
SRF Loan - Water	506	-	-
Water & Sewer Impact Fee	510	-	-
Public Financing Authority	550	-	-
Payroll Clearing Fund	700	5,388.84	13,675.28
			-
	Column Totals:	119,349.28	1,026,709.13
	City Report Totals:		1,146,058.41
	Payroll Period Ending: 06/06/2025		910,772.95
	Online Payments		18,257.04
	Voids - General Warrant		(90.97)
	Grand Report Total:		**2,074,997.43**

Janet Braun, Mayor

William Castrillon, Budget and Purchasing Manager

Hector Gomez, Chief City Clerk

Accounts Payable

Check Detail

User: tfernandez
Printed: 06/09/2025 - 4:57PM

Check Number	Check Date	Amount
CSD3014 - Ca. State Disbursement Unit		
321379	06/04/2025	
Inv PR 05.23.2025		903.69
321379 Total:		903.69
CSD3014 - Ca. State Disbursement Unit Total:		903.69
SCFT0000 - Franchise Tax Board		
321380	06/04/2025	
Inv PR 05.23.2025		134.98
321380 Total:		134.98
SCFT0000 - Franchise Tax Board Total:		134.98
SCFT0001 - Franchise Tax Board		
321381	06/04/2025	
Inv PR 05.23.2025		90.00
321381 Total:		90.00
SCFT0001 - Franchise Tax Board Total:		90.00
SOU5451 - S.P. Public Service Employees Association 700-0000-0000-2248-000		
0	06/04/2025	
Inv PR 05.24.2025		34.00
0 Total:		34.00
SOU5451 - S.P. Public Service Employees Association Total:		34.00
SSDV2018 - Sandoval, Sheila		
0	06/04/2025	
Inv PR 05.23.2025		1,014.47
0 Total:		1,014.47
SSDV2018 - Sandoval, Sheila Total:		1,014.47

Check Number	Check Date	Amount
Total:		2,177.14

Accounts Payable

Check Detail

User: tfernandez
Printed: 06/09/2025 - 5:11PM

Check Number	Check Date	Amount
AFLA7010 - AFLAC		
0	06/05/2025	
Inv 256677		693.35
0 Total:		693.35
AFLA7010 - AFLAC Total:		693.35
AMAZONCP - Amazon Capital Services, Inc.		
0	06/05/2025	
Inv 14L1-HK3M-P7YD		278.36
Inv 1C41-N9H7-C767		847.34
Inv 1KYM-TWCX-WYPX		14.35
Inv 1LCX-H7D3-WK9Q		17.62
Inv 1M76-KDQY-1GYW		74.37
Inv 1MCP-P6TN-PCQH		675.99
Inv 1MT4-7JM4-CC7L		65.14
Inv 1XJK-YJKV-RMHH		625.69
Inv 1XNL-6YNT-RVVW		23.33
0 Total:		2,622.19
AMAZONCP - Amazon Capital Services, Inc. Total:		2,622.19
ASCAP - ASCAP		
321382	06/05/2025	
Inv 500602714-MAY25		449.58
321382 Total:		449.58
ASCAP - ASCAP Total:		449.58
AT&T5006 - AT&T		
321383	06/05/2025	
Inv 130464796		127.69
321383 Total:		127.69
AT&T5006 - AT&T Total:		127.69
AT&T5011 - AT&T		
321384	06/05/2025	

Check Number	Check Date	Amount
Inv 62644164973570		4,134.79
321384 Total:		4,134.79
AT&T5011 - AT&T Total:		4,134.79
ATCN9011 - AT&T		
321385	06/05/2025	
Inv 000023529705		299.55
Inv 0023512517		28,601.49
Inv 0023512843		85.61
Inv 0023531386		2,527.13
321385 Total:		31,513.78
ATCN9011 - AT&T Total:		31,513.78
ATSS6010 - Arakelian Enterprises, Inc.		
0	06/05/2025	
Inv 11352690		840.70
0 Total:		840.70
ATSS6010 - Arakelian Enterprises, Inc. Total:		840.70
ATTE2011 - AT&T DW Holdings, Inc		
321386	06/05/2025	
Inv 8310014896776		10,334.24
321386 Total:		10,334.24
ATTE2011 - AT&T DW Holdings, Inc Total:		10,334.24
AUTOCSPC - Echeveria, Jose		
321396	06/05/2025	
Inv 12603		630.75
321396 Total:		630.75
AUTOCSPC - Echeveria, Jose Total:		630.75
CAL5236 - Dy-Dee Services of Pasadena, Inc.		
321395	06/05/2025	
Inv 2442729		96.97
Inv 2445387		88.49
321395 Total:		185.46
CAL5236 - Dy-Dee Services of Pasadena, Inc. Total:		185.46

Check Number	Check Date	Amount
CAN0607 - Cantu Graphics Inc.		
321388	06/05/2025	
Inv 62370-2		145.53
Inv 63490-4		214.99
Inv 63759-6		125.69
Inv 63944-3		438.28
Inv 63954-4		251.37
321388 Total:		1,175.86
CAN0607 - Cantu Graphics Inc. Total:		1,175.86
CIN4011 - AT&T Mobility		
321387	06/05/2025	
Inv 287351491376		68.50
321387 Total:		68.50
CIN4011 - AT&T Mobility Total:		68.50
CINTA3 - Cintas Corporation		
321389	06/05/2025	
Inv 4230754077		374.92
Inv 4231533465		374.92
321389 Total:		749.84
CINTA3 - Cintas Corporation Total:		749.84
CINTAS - Cintas Corporation		
321390	06/05/2025	
Inv 5271239605		237.00
Inv 8407509556		7.90
321390 Total:		244.90
CINTAS - Cintas Corporation Total:		244.90
DENFLRES - Flores, Dean		
321399	06/05/2025	
Inv 04182025		75.00
321399 Total:		75.00
DENFLRES - Flores, Dean Total:		75.00
DTATK701 - Data Ticket, Inc.		
321393	06/05/2025	
Inv 178920		200.00
321393 Total:		200.00

Check Number	Check Date	Amount
DTATK701 - Data Ticket, Inc. Total:		200.00
DTV5012 - DIRECTV		
321394	06/05/2025	
Inv 68653046X250529		104.98
321394 Total:		104.98
DTV5012 - DIRECTV Total:		104.98
FED1109 - FedEx		
321398	06/05/2025	
Inv 8-870-95779		11.50
321398 Total:		11.50
FED1109 - FedEx Total:		11.50
FFCA8060 - Foothill Fire Chiefs' Association		
321400	06/05/2025	
Inv 5/20/25		200.00
321400 Total:		200.00
FFCA8060 - Foothill Fire Chiefs' Association Total:		200.00
FIFASDBK - Fifth Asset, Inc.		
0	06/05/2025	
Inv DB2002245		13,000.00
0 Total:		13,000.00
FIFASDBK - Fifth Asset, Inc. Total:		13,000.00
FUNEXPRS - Fun Express, LLC		
321401	06/05/2025	
Inv 73729751401		474.80
321401 Total:		474.80
FUNEXPRS - Fun Express, LLC Total:		474.80
GAR5011 - Garvey Equipment Co		
321402	06/05/2025	
Inv 167967		1,415.26
321402 Total:		1,415.26

Check Number	Check Date	Amount
GAR5011 - Garvey Equipment Co Total:		1,415.26
GPDS7101 - Green Power Direct Solar		
321403	06/05/2025	
Inv 4136		150.00
321403 Total:		150.00
GPDS7101 - Green Power Direct Solar Total:		150.00
JCRS5011 - Jones Coffee Roasters		
321405	06/05/2025	
Inv 71073		240.00
321405 Total:		240.00
JCRS5011 - Jones Coffee Roasters Total:		240.00
JHMS8020 - JHM Supply Inc		
0	06/05/2025	
Inv 347150/1		28.10
0 Total:		28.10
JHMS8020 - JHM Supply Inc Total:		28.10
JSAR4011 - Jack's Auto Repair		
321404	06/05/2025	
Inv 20150		66.00
Inv 20161		66.00
Inv 20162		66.00
Inv 20166		66.00
321404 Total:		264.00
JSAR4011 - Jack's Auto Repair Total:		264.00
LILESTDA - Estrada, Lilly		
321397	06/05/2025	
Inv 04292025-1		341.11
Inv 04292025-2		10.50
321397 Total:		351.61
LILESTDA - Estrada, Lilly Total:		351.61
MDWSTPE - Midwest Tape LLC		
321409	06/05/2025	
Inv 507080156		22.37
Inv 507113475		182.26

Check Number	Check Date	Amount
321409 Total:		204.63
MDWSTPE - Midwest Tape LLC Total:		204.63
MER2145 - Merit Oil Company		
321407	06/05/2025	
Inv 901629		7,180.24
321407 Total:		7,180.24
MER2145 - Merit Oil Company Total:		7,180.24
MICH4011 - Sanchez, Michael		
321415	06/05/2025	
Inv E/9268920		31.27
321415 Total:		31.27
MICH4011 - Sanchez, Michael Total:		31.27
MREG1400 - Merrimac Petroleum, Inc.		
321408	06/05/2025	
Inv 2239429		1,876.48
Inv 2239430		5,709.56
321408 Total:		7,586.04
MREG1400 - Merrimac Petroleum, Inc. Total:		7,586.04
MUTOMAHA - Mutual of Omaha Insurance Company		
321410	06/05/2025	
Inv 001891847733		2,518.35
321410 Total:		2,518.35
MUTOMAHA - Mutual of Omaha Insurance Company Total:		2,518.35
MVCH3011 - MV Cheng & Associates Inc.		
321411	06/05/2025	
Inv 4/30/2025E		580.00
321411 Total:		580.00
MVCH3011 - MV Cheng & Associates Inc. Total:		580.00
NCBS587 - Nick Boswell Photography, Inc.		
321412	06/05/2025	
Inv 33452		70.00

Check Number	Check Date	Amount
321412 Total:		70.00
NCBS587 - Nick Boswell Photography, Inc. Total:		70.00
OGOV3011 - OpenGov, Inc.		
0	06/05/2025	
Inv INV19642		10,994.45
0 Total:		10,994.45
OGOV3011 - OpenGov, Inc. Total:		10,994.45
OLNP8010 - LCM-NEWS, Inc.		
321406	06/05/2025	
Inv 81089		2,460.00
Inv 83040		462.00
321406 Total:		2,922.00
OLNP8010 - LCM-NEWS, Inc. Total:		2,922.00
OVIDU - Simion, Ovidiu Adrian		
321417	06/05/2025	
Inv 04/16/25		50.00
321417 Total:		50.00
OVIDU - Simion, Ovidiu Adrian Total:		50.00
PAS4012 - City of Pasadena		
321391	06/05/2025	
Inv 30024888		190.10
321391 Total:		190.10
PAS4012 - City of Pasadena Total:		190.10
POR4707 - United Site Services, Inc.		
321419	06/05/2025	
Inv INV-5195656		374.24
321419 Total:		374.24
POR4707 - United Site Services, Inc. Total:		374.24
REALITYB - Reality Buffer LLC		
321414	06/05/2025	
Inv 6112025		300.00

Check Number	Check Date	Amount
321414 Total:		300.00
REALITYB - Reality Buffer LLC Total:		300.00
REP6115 - Yunex LLC		
0	06/05/2025	
Inv 5610004430		1,646.26
Inv 5610004437		1,577.71
0 Total:		3,223.97
REP6115 - Yunex LLC Total:		3,223.97
RNIL7101 - Nilo, Richard		
321413	06/05/2025	
Inv 04222025		21.06
Inv 5062025		21.99
Inv 5312025		25.61
321413 Total:		68.66
RNIL7101 - Nilo, Richard Total:		68.66
SDSI0107 - SDS Security Design Systems		
321416	06/05/2025	
Inv 249096		67.12
Inv 249097		29.15
Inv 249098		45.66
Inv 249099		36.66
Inv 249100		77.14
321416 Total:		255.73
SDSI0107 - SDS Security Design Systems Total:		255.73
SPBK - Springbrook Holding Company, LLC		
0	06/05/2025	
Inv INV-020864		140.00
0 Total:		140.00
SPBK - Springbrook Holding Company, LLC Total:		140.00
SPMN3010 - City of South Pasadena		
321392	06/05/2025	
Inv 14044-05.14.25		457.76
Inv 19386-05.14.25		552.16
Inv 19387-05.14.25		510.86
321392 Total:		1,520.78

Check Number	Check Date	Amount
SPMN3010 - City of South Pasadena Total:		1,520.78
STA5219 - Staples Business Advantage		
0	06/05/2025	
Inv 6031657209		314.89
Inv 6031730398		80.60
Inv 6031730400		58.36
Inv 6031730401		46.95
Inv 6031730404		16.12
Inv 6031891455		38.16
Inv 6031891456		407.19
Inv 6031891459		42.97
Inv 6031954637		9.96
Inv 6032027991		119.21
Inv 6032356602		161.50
Inv 6032431021		100.81
Inv 6032431022		44.03
Inv 6032638077		317.72
Inv 6032638080		20.34
Inv 6032638083		164.87
Inv 6032638085		44.18
0 Total:		1,987.86
STA5219 - Staples Business Advantage Total:		1,987.86
TIM4011 - Charter Communications Holdings, LLC		
0	06/05/2025	
Inv 187633401051425		387.10
Inv 187633501052125		3,918.72
Inv 188598401		130.50
Inv 188598501052125		266.32
0 Total:		4,702.64
TIM4011 - Charter Communications Holdings, LLC Total:		4,702.64
TMOB4010 - T-Mobile		
321418	06/05/2025	
Inv 988212311		462.13
321418 Total:		462.13
TMOB4010 - T-Mobile Total:		462.13
UPP7789 - Upper San Gabriel Valley MWD		
321420	06/05/2025	
Inv 2/04-25		109.43
Inv So Pas- 5.12.25		980.00
321420 Total:		1,089.43

Check Number	Check Date	Amount
UPP7789 - Upper San Gabriel Valley MWD Total:		1,089.43
VERW6711 - Verizon Wireless		
321421	06/05/2025	
Inv 6113767167		417.74
321421 Total:		417.74
VERW6711 - Verizon Wireless Total:		417.74
ZAVA4011 - Zavala, Jeanette		
321422	06/05/2025	
Inv 0020014090		15.00
321422 Total:		15.00
ZAVA4011 - Zavala, Jeanette Total:		15.00
Total:		117,172.14

Accounts Payable

Check Detail

User: tfernandez
Printed: 06/09/2025 - 5:18PM

Check Number	Check Date	Amount
ACMT2920 - All City Management Services, Inc.		
321424	06/18/2025	
Inv 101209		13,345.75
321424 Total:		13,345.75
ACMT2920 - All City Management Services, Inc. Total:		13,345.75
ACTM3010 - Robert Half International, Inc.		
0	06/18/2025	
Inv 0239188C		5,436.03
Inv 0240330C		6,374.60
Inv 65013116		1,900.00
0 Total:		13,710.63
ACTM3010 - Robert Half International, Inc. Total:		13,710.63
AKDC9265 - Ashok Kumar Dhingra		
321428	06/18/2025	
Inv CSP 2025-05		26,968.74
321428 Total:		26,968.74
AKDC9265 - Ashok Kumar Dhingra Total:		26,968.74
ALL0197 - All Star Fire Equipment, Inc.		
321425	06/18/2025	
Inv 264404		12,669.93
321425 Total:		12,669.93
ALL0197 - All Star Fire Equipment, Inc. Total:		12,669.93
ALMI8032 - Minaeva, Alessia		
321455	06/18/2025	
Inv SALSAWC-MAY25		253.50
321455 Total:		253.50
ALMI8032 - Minaeva, Alessia Total:		253.50

Check Number	Check Date	Amount
ALOB7101 - Bhatt, Alok		
321430	06/18/2025	
Inv 3351-1		513.00
Inv 3351-2		1,764.75
321430 Total:		2,277.75
ALOB7101 - Bhatt, Alok Total:		2,277.75
AME0229 - Ameritas		
0	06/18/2025	
Inv Dental May 2025		10,914.40
Inv Vision May 2025		2,760.88
0 Total:		13,675.28
AME0229 - Ameritas Total:		13,675.28
AMJCD803 - Cordero, Ambison J		
321439	06/18/2025	
Inv 1146A		942.00
321439 Total:		942.00
AMJCD803 - Cordero, Ambison J Total:		942.00
AMTIR4 - The Reinalt-Thomas Corporation DBA		
321483	06/18/2025	
Inv 2127214		327.87
321483 Total:		327.87
AMTIR4 - The Reinalt-Thomas Corporation DBA Total:		327.87
ANPL6710 - Tubbs, Anthony		
321485	06/18/2025	
Inv 9427		4,160.00
321485 Total:		4,160.00
ANPL6710 - Tubbs, Anthony Total:		4,160.00
BAK0369 - BTAC UNITED ACQUISITION HOLDING COMPANY		
0	06/18/2025	
Inv 2038984319		2,403.53
Inv 2038999350		852.15
Inv 2039001066		415.88
Inv 2039002080		330.93
Inv 2039005006		204.80
Inv 2039007496		383.88

Inv 2039010687		922.95
Inv 2039017689		468.35
Inv 2039035433		183.34
Inv 2039041462		247.00
Inv 2039041464		303.39
Inv 2039041557		587.98
Inv 2039042823		39.17
Inv 2039056754		332.02
Inv 2039063811		106.61
Inv 2039068590		60.71
0 Total:		7,842.69
BAK0369 - BTAC UNITED ACQUISITION HOLDING COMPANY Total:		7,842.69
BCDJ4011 - Bravo Chrysler Dodge Jeep Ram of Alhambra		
321432	06/18/2025	
Inv 460104		5,996.82
321432 Total:		5,996.82
BCDJ4011 - Bravo Chrysler Dodge Jeep Ram of Alhambra Total:		5,996.82
BSHL6710 - Base Hill, Inc., dba Jan Point		
0	06/18/2025	
Inv 26046		16,885.00
0 Total:		16,885.00
BSHL6710 - Base Hill, Inc., dba Jan Point Total:		16,885.00
CAME2015 - California Maintenance & Environmental		
0	06/18/2025	
Inv 40537		1,041.64
Inv 40538		1,041.64
Inv 40542		885.00
Inv 40543		885.00
0 Total:		3,853.28
CAME2015 - California Maintenance & Environmental Total:		3,853.28
CHWCONST - Chawkins, Ken		
321436	06/18/2025	
Inv 1143		1,950.00
321436 Total:		1,950.00
CHWCONST - Chawkins, Ken Total:		1,950.00
COBR7131 - The Advantage Group		

Check Number	Check Date	Amount
0	06/18/2025	
Inv June 2025		21,418.08
0 Total:		21,418.08
COBR7131 - The Advantage Group Total:		21,418.08
COMMDOOR - Commercial Door Company, Inc.		
321438	06/18/2025	
Inv 90254		10,298.75
321438 Total:		10,298.75
COMMDOOR - Commercial Door Company, Inc. Total:		10,298.75
CONYEE - Yee, Connie		
0	06/18/2025	
Inv BodySculptMay		70.20
Inv MayFF		916.00
0 Total:		986.20
CONYEE - Yee, Connie Total:		986.20
CRHY8067 - Hartney, Corey P.		
0	06/18/2025	
Inv INVMAY25		91.00
0 Total:		91.00
CRHY8067 - Hartney, Corey P. Total:		91.00
DABN8267 - Bohan, Diana 101-8030-8021-8267-000		
0	06/18/2025	
Inv MayYoga		639.20
0 Total:		639.20
DABN8267 - Bohan, Diana Total:		639.20
DBAR3011 - Brink's Incorporated		
0	06/18/2025	
Inv 12938944		2,232.60
Inv 7559498		58.12
0 Total:		2,290.72
DBAR3011 - Brink's Incorporated Total:		2,290.72
DEPC6011 - Dewey Services Inc		

Check Number	Check Date	Amount
321442	06/18/2025	
Inv 17385117		120.00
Inv 17385118		120.00
Inv 17385119		120.00
Inv 17385120		120.00
Inv 17385121		135.50
Inv 17385123		120.00
Inv 17385124		120.00
Inv 17385127		299.00
321442 Total:		1,154.50
DEPC6011 - Dewey Services Inc Total:		1,154.50
DSP0755 - D & S Printing		
321440	06/18/2025	
Inv 5002		528.10
321440 Total:		528.10
DSP0755 - D & S Printing Total:		528.10
DTATK701 - Data Ticket, Inc.		
321441	06/18/2025	
Inv 177626		200.00
321441 Total:		200.00
DTATK701 - Data Ticket, Inc. Total:		200.00
EDVL6010 - Villalobos, Edgar		
321486	06/18/2025	
Inv FY24-5_Boots_EV		240.88
Inv T2 Cert 3/18/25		60.00
Inv T3 T/C 5/15/25		190.00
321486 Total:		490.88
EDVL6010 - Villalobos, Edgar Total:		490.88
EMSQIPAR - Givot, David		
0	06/18/2025	
Inv SPFD-05/2025		2,499.00
0 Total:		2,499.00
EMSQIPAR - Givot, David Total:		2,499.00
ENNISFLT - ENNIS-FLINT, INC		
321443	06/18/2025	
Inv 477183		4,330.23

Check Number	Check Date	Amount
321443 Total:		4,330.23
ENNISFLT - ENNIS-FLINT, INC Total:		4,330.23
ERIC8031 - Ceballos, Erick		
321435	06/18/2025	
Inv 86932018		590.00
321435 Total:		590.00
ERIC8031 - Ceballos, Erick Total:		590.00
G3LC6011 - G3, Green Gardens Group, LLC		
0	06/18/2025	
Inv 1341		1,550.00
0 Total:		1,550.00
G3LC6011 - G3, Green Gardens Group, LLC Total:		1,550.00
G4ARCHIT - Group 4 Architecture Research + Planning, Inc.		
321447	06/18/2025	
Inv 12645		17,100.00
Inv 12681		21,575.00
Inv 12733		23,800.01
Inv 12774		16,975.00
321447 Total:		79,450.01
G4ARCHIT - Group 4 Architecture Research + Planning, Inc. Total:		79,450.01
GALTECP - Galileo Technologies Corporation		
321444	06/18/2025	
Inv 42729		7,678.62
321444 Total:		7,678.62
GALTECP - Galileo Technologies Corporation Total:		7,678.62
GAR5011 - Garvey Equipment Co		
321445	06/18/2025	
Inv 165528		13,973.32
321445 Total:		13,973.32
GAR5011 - Garvey Equipment Co Total:		13,973.32
GAY8856 - Gaylord Bros., Inc.		
0	06/18/2025	

Check Number	Check Date	Amount
Inv 2910183		188.62
0 Total:		188.62
GAY8856 - Gaylord Bros., Inc. Total:		188.62
GRA6601 - Grainger		
321446	06/18/2025	
Inv 9493368204		667.63
Inv 9514199794		1,134.37
321446 Total:		1,802.00
GRA6601 - Grainger Total:		1,802.00
GSZE4010 - Sze, Gary		
321481	06/18/2025	
Inv 0143006		8.80
321481 Total:		8.80
GSZE4010 - Sze, Gary Total:		8.80
HAC6711 - Hach Company		
321448	06/18/2025	
Inv 14496069		8,589.88
321448 Total:		8,589.88
HAC6711 - Hach Company Total:		8,589.88
IIALIFTS - IIA Lifting Services, Inc		
0	06/18/2025	
Inv INDI97732		1,164.37
0 Total:		1,164.37
IIALIFTS - IIA Lifting Services, Inc Total:		1,164.37
IMPR8032 - 4Imprint, Inc.		
321423	06/18/2025	
Inv 13763274		969.72
321423 Total:		969.72
IMPR8032 - 4Imprint, Inc. Total:		969.72
JAMZRTE - Zarate, Jaime		
321490	06/18/2025	
Inv 011		850.00

321490 Total:		850.00
JAMZRTE - Zarate, Jaime Total:		850.00
JFHL4011 - Jeff Holland		
321449	06/18/2025	
Inv 2		457.09
321449 Total:		457.09
JFHL4011 - Jeff Holland Total:		457.09
JULE6011 - Leung, Justin		
321451	06/18/2025	
Inv NT0525-04		1,000.00
321451 Total:		1,000.00
JULE6011 - Leung, Justin Total:		1,000.00
KARR6011 - Raju, Kariavandan		
321466	06/18/2025	
Inv DW0525-07		500.00
321466 Total:		500.00
KARR6011 - Raju, Kariavandan Total:		500.00
LBBM4010 - RCA Investments Inc		
321468	06/18/2025	
Inv 53274		895.30
Inv 53275		1,612.54
321468 Total:		2,507.84
LBBM4010 - RCA Investments Inc Total:		2,507.84
LOAH2011 - Angel Hami Ho		
321427	06/18/2025	
Inv 2415-04		3,387.31
Inv 2415-05		8,253.00
321427 Total:		11,640.31
LOAH2011 - Angel Hami Ho Total:		11,640.31
MAC1529 - Macdonald, Douglas A.		
0	06/18/2025	
Inv SCD(MAY25)		211.25

Check Number	Check Date	Amount
0 Total:		211.25
MAC1529 - Macdonald, Douglas A. Total:		211.25
MAHADCPY - Mahana Dance Company		
321453	06/18/2025	
Inv 25-187		516.00
321453 Total:		516.00
MAHADCPY - Mahana Dance Company Total:		516.00
MAN5011 - Manhattan Stitching Co		
321454	06/18/2025	
Inv 108709		2,484.18
321454 Total:		2,484.18
MAN5011 - Manhattan Stitching Co Total:		2,484.18
MCPSTI - Pusateri, Michele		
0	06/18/2025	
Inv PBAll-MAY25		2,811.25
0 Total:		2,811.25
MCPSTI - Pusateri, Michele Total:		2,811.25
MIDTWNCA - Midtown Carpet Company		
0	06/18/2025	
Inv 10540		4,937.74
Inv 10579		4,787.27
Inv 10603		450.00
0 Total:		10,175.01
MIDTWNCA - Midtown Carpet Company Total:		10,175.01
MNBL8170 - Crestline Software, LLC		
0	06/18/2025	
Inv #INV13640		28,486.32
0 Total:		28,486.32
MNBL8170 - Crestline Software, LLC Total:		28,486.32
MNJA2011 - Luken, Michael W.		
321452	06/18/2025	
Inv 1151		33,800.00

Check Number	Check Date	Amount
Inv 1153		26,700.00
321452 Total:		60,500.00
MNJA2011 - Luken, Michael W. Total:		60,500.00
MOCO6011 - Monet Construction, Inc		
321456	06/18/2025	
Inv 2		159,600.00
321456 Total:		159,600.00
MOCO6011 - Monet Construction, Inc Total:		159,600.00
MOSAICPP - Mosaic Public Partners LLC		
321457	06/18/2025	
Inv 1772		8,250.00
Inv 1773		8,250.00
321457 Total:		16,500.00
MOSAICPP - Mosaic Public Partners LLC Total:		16,500.00
MSKM8032 - Mischook, Kim		
0	06/18/2025	
Inv BDBMAY25		396.50
0 Total:		396.50
MSKM8032 - Mischook, Kim Total:		396.50
NIMO9203 - Ninyo & Moore		
321459	06/18/2025	
Inv 301935		2,132.75
Inv 302985		5,284.00
321459 Total:		7,416.75
NIMO9203 - Ninyo & Moore Total:		7,416.75
NRMC6118 - National Ready Mix Concrete Sales, LLC		
321458	06/18/2025	
Inv 941695		1,040.17
321458 Total:		1,040.17
NRMC6118 - National Ready Mix Concrete Sales, LLC Total:		1,040.17
NV5R9266 - NV5		
0	06/18/2025	

Check Number	Check Date	Amount
Inv 450181		49,074.00
0 Total:		49,074.00
NV5R9266 - NV5 Total:		49,074.00
OLNP8010 - LCM-NEWS, Inc.		
321450	06/18/2025	
Inv 81230		1,260.00
Inv 81445		1,116.00
Inv 82885		12,348.00
Inv 82899		4,369.00
Inv 83071		2,629.00
Inv 83121		3,332.00
Inv 83123		6,300.00
321450 Total:		31,354.00
OLNP8010 - LCM-NEWS, Inc. Total:		31,354.00
PARE8031 - Reynaga, Paulo Sergio		
321470	06/18/2025	
Inv SUMRCON25-6/29		1,800.00
321470 Total:		1,800.00
PARE8031 - Reynaga, Paulo Sergio Total:		1,800.00
PAS4012 - City of Pasadena		
321437	06/18/2025	
Inv 30026303		80,000.00
321437 Total:		80,000.00
PAS4012 - City of Pasadena Total:		80,000.00
PAY7788 - Payke Gymnastics Academy, Inc.		
321460	06/18/2025	
Inv PAYKE-MAY25		1,080.00
321460 Total:		1,080.00
PAY7788 - Payke Gymnastics Academy, Inc. Total:		1,080.00
PDI417 - Plumbers Depot Inc.		
321462	06/18/2025	
Inv PD-58840		15,362.36
321462 Total:		15,362.36

Check Number	Check Date	Amount
PDI417 - Plumbers Depot Inc. Total:		15,362.36
PHOE4610 - Phoenix Group Information Systems		
321461	06/18/2025	
Inv 042025184		4,334.22
321461 Total:		4,334.22
PHOE4610 - Phoenix Group Information Systems Total:		4,334.22
PLCARIE - Plescia, Carrie		
0	06/18/2025	
Inv LATDANCEMAY25		369.20
0 Total:		369.20
PLCARIE - Plescia, Carrie Total:		369.20
PMAB8021 - Budka, Pamela Avry		
321433	06/18/2025	
Inv ChairYogaMay		348.00
Inv MeditationMay		209.60
321433 Total:		557.60
PMAB8021 - Budka, Pamela Avry Total:		557.60
PMLDONG - Dong, Pamella C.		
0	06/18/2025	
Inv MayMArtial Arts		92.00
Inv MAyQiGong		108.00
0 Total:		200.00
PMLDONG - Dong, Pamella C. Total:		200.00
POIN8032 - Behtereva, Elena		
321429	06/18/2025	
Inv PBP-MAY25		240.00
321429 Total:		240.00
POIN8032 - Behtereva, Elena Total:		240.00
PUFG8267 - Wong, Pauline Sam		
0	06/18/2025	
Inv AdultMay		302.25
Inv SeniorMay		260.00
0 Total:		562.25

Check Number	Check Date	Amount
PUFG8267 - Wong, Pauline Sam Total:		562.25
PVP7777 - PVP Communications, Inc.		
321463	06/18/2025	
Inv 136461		90.00
321463 Total:		90.00
PVP7777 - PVP Communications, Inc. Total:		90.00
QLTJTRTR - Quality Jet Rooter, Inc.		
321464	06/18/2025	
Inv 1059		3,060.00
321464 Total:		3,060.00
QLTJTRTR - Quality Jet Rooter, Inc. Total:		3,060.00
QUI7779 - Quinn Company		
321465	06/18/2025	
Inv WO810272634		8,591.65
321465 Total:		8,591.65
QUI7779 - Quinn Company Total:		8,591.65
RAPTRENT - Raptor Events LLC		
321467	06/18/2025	
Inv 2943		1,000.00
321467 Total:		1,000.00
RAPTRENT - Raptor Events LLC Total:		1,000.00
REP6115 - Yunex LLC		
0	06/18/2025	
Inv 5610004421		19,901.20
Inv 5610004422		2,507.50
Inv 5610004428		6,366.20
Inv 5610005261		4,582.90
Inv 90003915		3,435.00
0 Total:		36,792.80
REP6115 - Yunex LLC Total:		36,792.80
REPBEV - Republic EVS, LLC		
321469	06/18/2025	
Inv 12896		199.20

321469 Total:		199.20
REPBEV - Republic EVS, LLC Total:		199.20
RMSF8025 - Trapeze Software Group, Inc.		
0	06/18/2025	
Inv RMSMA00003626		1,968.10
0 Total:		1,968.10
RMSF8025 - Trapeze Software Group, Inc. Total:		1,968.10
RVCSTLLC - Revenue & Cost Specialist, LLC		
0	06/18/2025	
Inv 9342		9,170.00
0 Total:		9,170.00
RVCSTLLC - Revenue & Cost Specialist, LLC Total:		9,170.00
RWGN8160 - Richards, Watson & Gershon		
0	06/18/2025	
Inv 253197		26,059.72
Inv 253198		12,404.40
Inv 253199		45.00
Inv 253200		1,204.00
0 Total:		39,713.12
RWGN8160 - Richards, Watson & Gershon Total:		39,713.12
SAVGTRN - Savage, Scott		
321474	06/18/2025	
Inv 3150		710.00
321474 Total:		710.00
SAVGTRN - Savage, Scott Total:		710.00
SAXE2013 - Saxe-Clifford PH.D, Susan		
321475	06/18/2025	
Inv 25-0515-2		450.00
321475 Total:		450.00
SAXE2013 - Saxe-Clifford PH.D, Susan Total:		450.00
SCRR4010 - Superior Court of California, County of LA		
321480	06/18/2025	

Check Number	Check Date	Amount
Inv April 2025		3,332.50
321480 Total:		3,332.50
SCRR4010 - Superior Court of California, County of LA Total:		3,332.50
SGVMC111 - San Gabriel Valley Medical Center		
321472	06/18/2025	
Inv 695439		48.00
Inv 937344		48.00
Inv 937902		48.00
Inv 938195		48.00
321472 Total:		192.00
SGVMC111 - San Gabriel Valley Medical Center Total:		192.00
SHRASNDV - Sandoval, Sharae		
321473	06/18/2025	
Inv 05/11-16/25		302.98
321473 Total:		302.98
SHRASNDV - Sandoval, Sharae Total:		302.98
SISO2011 - Sincerus Solutions, Inc.		
321477	06/18/2025	
Inv 143283		1,680.00
321477 Total:		1,680.00
SISO2011 - Sincerus Solutions, Inc. Total:		1,680.00
SPEC5011 - Spectrum Gas Products		
321478	06/18/2025	
Inv 00651559		99.00
321478 Total:		99.00
SPEC5011 - Spectrum Gas Products Total:		99.00
SSSS8267 - Round Star West, LLC		
0	06/18/2025	
Inv S.S.S-April25		1,029.60
0 Total:		1,029.60
SSSS8267 - Round Star West, LLC Total:		1,029.60
SSW8031 - S & S Worldwide, Inc.		

Check Number	Check Date	Amount
321471	06/18/2025	
Inv SO102225755		2,294.00
321471 Total:		2,294.00
SSW8031 - S & S Worldwide, Inc. Total:		2,294.00
STCA6011 - Caine, Stephen		
321434	06/18/2025	
Inv NT0525-03		100.00
321434 Total:		100.00
STCA6011 - Caine, Stephen Total:		100.00
STDF4010 - Sentinel Defense, LLC		
321476	06/18/2025	
Inv D112		750.00
321476 Total:		750.00
STDF4010 - Sentinel Defense, LLC Total:		750.00
SUVA8022 - Sunset Vans Inc.		
321479	06/18/2025	
Inv 100738		209.04
321479 Total:		209.04
SUVA8022 - Sunset Vans Inc. Total:		209.04
SWTA4011 - Ames, Jason		
321426	06/18/2025	
Inv ST250623SP		400.00
321426 Total:		400.00
SWTA4011 - Ames, Jason Total:		400.00
TAPCO - Traffic and Parking Control Co., LLC		
321484	06/18/2025	
Inv 1801555		9,758.81
321484 Total:		9,758.81
TAPCO - Traffic and Parking Control Co., LLC Total:		9,758.81
THEARGRP - The Arroyo Group		
321482	06/18/2025	
Inv 10220-2		59,767.40

Check Number	Check Date	Amount
Inv 10223-3		54,881.50
321482 Total:		114,648.90
THEARGRP - The Arroyo Group Total:		114,648.90
TONY7101 - Wei, Tony		
321487	06/18/2025	
Inv 3247-1		342.00
Inv 3247-2		1,176.50
Inv 3257		249.50
321487 Total:		1,768.00
TONY7101 - Wei, Tony Total:		1,768.00
TRUPINT - TruePoint Solutions, LLC		
0	06/18/2025	
Inv 3849		3,382.50
0 Total:		3,382.50
TRUPINT - TruePoint Solutions, LLC Total:		3,382.50
TYBL7000 - Borrello, Tyler		
321431	06/18/2025	
Inv 05/19-21/25		317.62
321431 Total:		317.62
TYBL7000 - Borrello, Tyler Total:		317.62
WES4152 - West Coast Arborists, Inc.		
0	06/18/2025	
Inv 228774		680.00
0 Total:		680.00
WES4152 - West Coast Arborists, Inc. Total:		680.00
WHAINC - William Hezmalhalch Architects, Inc.		
321488	06/18/2025	
Inv 112026		3,000.00
321488 Total:		3,000.00
WHAINC - William Hezmalhalch Architects, Inc. Total:		3,000.00
WIT6353 - Wittman Enterprises LLC		
321489	06/18/2025	

Check Number	Check Date	Amount
Inv 2504059		3,241.77
321489 Total:		3,241.77
WIT6353 - Wittman Enterprises LLC Total:		3,241.77
Total:		1,026,709.13

City of
SOUTH PASADENA

Online Payment Log			
Date	**Vendor**	**Amount**	**Description**
6/5/2025	So Cal Gas	$1,358.66	Online Payment for City Owned Natural Gas Accounts.
6/10/2025	So Cal Edison	$16,898.38	Online Payment for Various City Owned Electric Accounts.
Total:		***$18,257.04***	

Payroll

Payroll Summary Report

Payroll Date: **06.06.2025** **Regular**

Checks	$	74.60
Direct Deposits	$	564,410.97
IRS Payments	$	127,597.99
EDD - State of CA	$	42,147.14
PERS Pension	$	145,064.56
Deferred Comp	$	31,434.54
PERS Health	$	43.15
Subtotal:	**$**	**910,772.95**
Grand Total:	**$**	**910,772.95**

Accounts Payable

Void Check Proof List

User: hlin
Printed: 06/05/2025 - 11:30AM
Batch: 00001.06.2025 - VOID 321330

Account Number	Amount	Invoice No	Inv Date	Description	Reference	Task Label	Type	PONumber	Close PO?	Line Item
Vendor: SCFT0000	Franchise Tax Board									
Check No: 321330	Check Date: 06/04/2025									
	90.97	FTB-00008141	05/07/2025	7/1/2024-6/30/2025 Franchise Tax Boa					No	0
101-4010-4011-8020-000										
Check Total:	90.97									
Vendor Total:	90.97									
Report Total:	90.97									

CITY OF SOUTH PASADENA

321330

Vendor Name: Franchise Tax Board
Vendor Number: SCFT0000
Check Date: 6/4/2025
Check Amount: 90.97

Invoice Number	Date	Description	Amount
FTB-00008141	5/7/2025	7/1/2024-6/30/2025 Franchise Tax Boards Offsets	90.97

DO NOT CASH THIS CHECK UNLESS YOU SEE A TRUE WATERMARK-HOLD AT A LIGHT TO VIEW.

CITY OF SOUTH PASADENA
General Account
1414 Mission Street
South Pasadena, CA 91030
(626) 403-7254

WARNING
DO NOT CASH THIS CHECK UNLESS
YOU SEE A TRUE WATERMARK ON FACE AND
ON REVERSE SIDE.
HOLD AT AN ANGLE TO VERIFY.

Bank of the West
1-800-488-2265

90-4284/1222

321330

Date	Amount
6/4/2025	90.97

Pay: NINETY AND 97 / 100

To the order of:

Franchise Tax Board
P.O. Box 942867
Sacramento, CA 94267-0011

VOID

⑈321330⑈ ⑆[redacted]

CITY OF SOUTH PASADENA

321330

Vendor Name: Franchise Tax Board
Vendor Number: SCFT0000
Check Date: 6/4/2025
Check Amount: 90.97

Invoice Number	Date	Description	Amount
FTB-00008141	5/7/2025	7/1/2024-6/30/2025 Franchise Tax Boards C	90.97

Deluxe® | 1-800-888-6327

Ref No: G908900649

BMO

Create Stop Payment Confirmation

Generated On: 2025-06-09 15:32 p.m. ET by TFERNANDEZ

Enter Details 1 — Verify Details 2 — Complete 3

Your stop has been successfully created. Please print this page for your record.

Transaction Details

Stop Type	Stop Status	Reference Number
Single	Confirmed	[redacted]

Account

[redacted]

Check Number

321330

Payee	Amount
Franchise Tax Board	90.97

Expiry Date

2030-06-09

Reason for Stop

Other

Term

60 Months

Outlook

RE: INV FTB-00008141

wrong vendor used for check #321330

From Singh, Shailene <SSSingh@sco.ca.gov>
Date Wed 6/4/2025 1:28 PM
To Herman Lin <hlin@southpasadenaca.gov>
Cc ADM AR <admar@sco.ca.gov>

CAUTION: This email originated from outside of the City of South Pasadena. Do not click links or open attachments unless you recognize the sender and know the content is safe.

CAUTION: This email originated from outside of the City of South Pasadena. Do not click links or open attachments unless you recognize the sender and know the content is safe.

Hi Herman,
Please make check payable as instructed on the invoice to State Controller.

Thank you,

correct vendor is: SCO3311

Shailene Singh | Associate Accounting Analyst
Office of State Controller Malia M. Cohen
Administration and Disbursements | DAO
300 Capitol Mall, Suite 1500
Sacramento, CA 95814 | 916.445.3771

From: Herman Lin <
Sent: Wednesday, June 4, 2025 1:03 PM
To: ADM AR <admar@sco.ca.gov>
Subject: INV FTB-00008141
Importance: High

CAUTION:
This email originated from outside of the organization Email System.
Do not click links or open attachments unless you recognize the sender's email address and know the content is safe.

Hello,

We just issue a check to pay INV# FTB-00008141 in amount of $90.97 for Customer ID: CITY465.
Check payable we made is: **Franchise Tax Board**

We notice the remit advise says Remit Payment to: **State Controller**, Departmental Accounting Office

INVOICE

State Controller

Invoice Number:	FTB-00008141
Invoice Date:	05/07/2025
Due Date:	06/21/2025
Customer ID:	CITY465

emailed 6/4/25 -HL

SCO 3311

For billing questions, please contact us at (916)-445-3771. Email Address : ADMAR@sco.ca.gov.
Contains confidential information and unauthorized use or disclosure is prohibited by State law.

Please detach this portion of the bill and return it with your payment.

Customer Name:	CITY OF SOUTH PASADENA
Customer ID:	CITY465
Invoice ID:	FTB-00008141
Due Date:	06/21/2025
Fiscal Year:	2024-2025
Amount Due:	$ 90.97
Amount Paid:	_____

Remit Payment To:

State Controller
Departmental Accounting Office
Attn: Accounts Receivables
P.O. Box 942850
Sacramento CA 94250-0001

CITY465FTB-000081410000009097

City Council Agenda Report

ITEM NO. 6

DATE: June 18, 2025

FROM: Todd Hileman, City Manager

PREPARED BY: Alma Medina, Senior Management Analyst

SUBJECT: **CONSIDERATION OF APPROVAL OF THE THIRD AMENDMENT TO THE PROFESSIONAL SERVICES AGREEMENT WITH MNJ ADVISORS, INC. FOR TEMPORARY STAFFING SERVICES, IN THE AMOUNT OF $35,000 FOR A NEW TOTAL NOT-TO-EXCEED AMOUNT OF $135,000 AND TO EXTEND THE TERMINATION DATE**

Recommendation

It is recommended that the City Council consider approving the proposed Third Amendment to the Professional Services Agreement with MNJ Advisors, Inc., to extend the agreement through August 15, 2025, and increase the compensation in the amount of $35,000 for continued temporary staffing services, for a new total not-to-exceed compensation amount of $135,000.

Executive Summary

The City has been utilizing the services of MNJ Advisors, Inc., due to the recent turnover of key staff positions. In order to provide a smooth transition to new staff and continuity of operations, it is requested that MNJ's principal, Josette Reina-Luken continue through August 15, 2025 and assist with the completion of the Fiscal Year end, accounting close and audit, and labor negotiations while staff continues to finalize next fiscal year's budget. The current agreement with MNJ Advisors is set to expire on June 30, 2025. This action is to extend the agreement and increase the contract amount by $35,000 for a new total not-to-exceed amount of $135,000.

Background

MNJ Advisors, Inc. has provided temporary staffing for the Management Services Department since March 3, 2025, with an emphasis on timely completion of the Fiscal Year 2024-25 mid-year budget review, Fiscal Year 2025-26 budget development, and temporarily serving in the role of Management Services Director. Continued support would include working with the new Assistant City Manager/Chief Financial Officer to:

- Wrap up the Annual Comprehensive Financial Report (ACFR)
- Implement Payroll improvements
- Develop the Fiscal Year 2025-2026 budget
- Assisting with Labor Negotiations

Analysis
The initial MNJ Advisors, Inc. contract had a term from March 3, 2025 through June 30, 2025, for a maximum amount of $30,000. On March 19, 2025, the First Amendment was approved to increase the contract amount to $55,000. On April 28, 2025, the Second Amendment was approved to increase the contract amount to $100,000. With the addition of newly hired staff, a transition period of one month will be needed to assist in the completion of some critical projects to complete the Fiscal Year 2025-2026 budget. An amendment is required for the continuation of services and will provide the ability for the City to make payment for such services.

Staff recommends the approval of the Third Amendment to increase the contract amount in the amount of $35,000 for a new total not to exceed the amount of $135,000 for continued services to tackle the priority areas listed above, as well as the finalization of the Fiscal Year 2025-2026 budget.

Fiscal Impact
The proposed amendment, if approved, will increase the contract total amount by $35,000, for a total contract not to exceed $135,000. As these costs will be incurred in the new fiscal year, the amendment amount of $35,000 will be funded from the Finance Department's Operating and Maintenance budget, Professional Service line item (101-3010-3011-8170-000).

Attachment:
Attachment No. 1 - Proposed Third Amendment
Attachment No. 2 - Second Amendment
Attachment No. 3 - First Amendment
Attachment No. 4 - Professional Services Agreement

THIRD AMENDMENT TO PROFESSIONAL SERVICES AGREEMENT FOR CONSULTANT SERVICES

THIS AMENDMENT ("Amendment") is made on this 18th day of June 2025, by and between the CITY OF SOUTH PASADENA ("CITY") and MNJ ADVISORS, INC. ("CONSULTANT').

RECITALS

WHEREAS, on February 26, 2025, the CITY and CONSULTANT entered into an Agreement for PROFESSIONAL SERVICES ("Agreement") for CONSULTANT to perform Interim Director of Management Services services for the City; and

WHEREAS, the original Agreement was in the amount of $30,000, for the Scope of Services; and

WHEREAS, on March 19, 2025, the CITY executed an Amendment to increase the total contract in an amount not to exceed $25,000, for a new aggregate total of Agreement and Amendment sum total of $55,000; and

WHEREAS, on April 28, 2025, the CITY executed an Amendment to increase the total contract in an amount not to exceed $45,000, for a new aggregate total of Agreement and Amendment sum total of $100,000; and

WHEREAS, the CITY desires to execute an Amendment to increase the total contract in an amount not to exceed $35,000, for a new aggregate total of Agreement and Amendment sum total of $135,000, and extend the agreement term through August 15, 2025; and

NOW THEREFORE, THE CITY AND THE CONSULTANT AGREE AS FOLLOWS:

1. That Section 3.4 "Maximum Amount" of the Agreement is hereby amended to read as follows:

   "Maximum Amount": The highest total compensation and cost payable to CONSULTANT by CITY under this agreement. The Maximum Amount under this Agreement is One Hundred and Thirty-Five Thousand Dollars ($135,000).

2. That Section 3.6 “Termination Date” of the Agreement is hereby amended to read as follows:
   “Termination Date”: August 15, 2025

3. All other terms, conditions, and provisions of the Agreement to the extent not modified by this Amendment, shall remain in full force and effect.

“City” City of South Pasadena	“Consultant” MNJ Advisors, Inc.
By:_____ *Signature*	By:_____ *Signature*
Printed: Todd Hileman	Printed: Josette Reina Luken
Title: City Manager	Title: Vice President
Date:_____	Date:_____

Attest:

By:_____
Hector Gomez, Chief City Clerk

Date:_____

Approved as to form:

By:_____
Roxanne M. Diaz, City Attorney

Date:_____

Docusign Envelope ID: 5323CBEB-FC90-44CE-A01F-58E32F1A19B2

SECOND AMENDMENT TO PROFESSIONAL SERVICES AGREEMENT FOR CONSULTANT SERVICES

THIS AMENDMENT ("Amendment") is made on this 28th day of April 2025, by and between the CITY OF SOUTH PASADENA ("CITY") and MNJ ADVISORS, INC. ("CONSULTANT').

RECITALS

WHEREAS, on February 26, 2025, the CITY and CONSULTANT entered into an Agreement for PROFESSIONAL SERVICES ("Agreement") for CONSULTANT to perform Interim Director of Management Services services for the City; and

WHEREAS, the original Agreement was in the amount of $30,000, for the Scope of Services; and

WHEREAS, on March 19, 2025, the CITY executed an Amendment to increase the total contract in an amount not to exceed $25,000, for a new aggregate total of Agreement and Amendment sum total of $55,000; and

WHEREAS, the CITY desires to execute an Second Amendment to increase the total contract in an amount not to exceed $45,000, for a new aggregate total of Agreement and Amendments sum total of $100,000; and

NOW THEREFORE, THE CITY AND THE CONSULTANT AGREE AS FOLLOWS:

1. That Section 3.4 "Maximum Amount" of the Agreement is hereby amended to read as follows:
   "Maximum Amount": The highest total compensation and cost payable to CONSULTANT by CITY under this agreement. The Maximum Amount under this Agreement is One Hundred Thousand Dollars ($100,000).

2. All other terms, conditions, and provisions of the Agreement to the extent not modified by this Amendment, shall remain in full force and effect.

Docusign Envelope ID: 5323CBEB-FC90-44CE-A01F-58E32F1A19B2

“City”
City of South Pasadena

By: Signed by: Todd Hileman 5CF386AC460044B...
Signature

Printed: Todd Hileman

Title: City Manager

Date: 5/14/2025

“Consultant”
MNJ Advisors, Inc.

By: Signed by: 1F105C114A134A8...
Signature

Printed: Josette Reina Luken

Title: Vice President

Date: 5/1/2025

Attest:

By: Signed by: Hector Gomez 9C28A8A8EFB44A7...
Hector Gomez, Chief City Clerk

Date: 5/20/2025

Approved as to form:

By: DocuSigned by: Roxanne Diaz A7809E5CA8A241F...
Roxanne M. Diaz, City Attorney

Date: 5/14/2025

Docusign Envelope ID: 4E2EAD14-BE6D-4880-903A-95BC4D876F3B

FIRST AMENDMENT TO PROFESSIONAL SERVICES AGREEMENT FOR CONSULTANT SERVICES

THIS AMENDMENT ("Amendment") is made on this 19th day of March 2025, by and between the CITY OF SOUTH PASADENA ("CITY") and MNJ ADVISORS, INC. ("CONSULTANT').

RECITALS

WHEREAS, on February 26, 2025, the CITY and CONSULTANT entered into an Agreement for PROFESSIONAL SERVICES ("Agreement") for CONSULTANT to perform Interim Director of Management Services services for the City; and

WHEREAS, the original Agreement was in the amount of $30,000, for the Scope of Services; and

WHEREAS, the CITY desires to execute an Amendment to increase the total contract in an amount not to exceed $25,000. The aggregate total of Agreement and this Amendment is a sum total of $55,000; and

NOW THEREFORE, THE CITY AND THE CONSULTANT AGREE AS FOLLOWS:

1. That Section 3.4 "Maximum Amount" of the Agreement is hereby amended to read as follows:
   "Maximum Amount": The highest total compensation and cost payable to CONSULTANT by CITY under this agreement. The Maximum Amount under this Agreement is Fifty-Five Thousand Dollars ($55,000).

2. All other terms, conditions, and provisions of the Agreement to the extent not modified by this Amendment, shall remain in full force and effect.

Docusign Envelope ID: 4E2EAD14-BE6D-4880-903A-95BC4D876F3B

"City"
City of South Pasadena

By: Signed by: Sean Joyce 0D867796FCFE42A...
Signature

Printed: Sean Joyce

Title: Interim City Manager

Date: 3/26/2025

"Consultant"
MNJ Advisors, Inc.

By: Signed by: Josette Reina Luken 1F105C114A13448...
Signature

Printed: Josette Reina Luken

Title: Vice President

Date: 3/26/2025

Attest:

By: DocuSigned by: Mark Perez 8C20A8AB5EFB14A7...
Mark Perez, Deputy City Clerk

Date: 3/26/2025

Approved as to form:

By: DocuSigned by: Roxanne Diaz A7800E5CA8A241F...
Roxanne M. Diaz, City Attorney

Date: 3/26/2025

Docusign Envelope ID: B2575465-0155-4128-BF51-780083022DB0

PROFESSIONAL SERVICES AGREEMENT FOR CONSULTANT SERVICES

(City of South Pasadena / MNJ Advisors, Inc.)

1. IDENTIFICATION

This PROFESSIONAL SERVICES AGREEMENT ("Agreement") is entered into by and between the City of South Pasadena, a California municipal corporation ("City"), and MNJ Advisors, Inc.("Consultant").

2. RECITALS

2.1. City has determined that it requires the following professional services from a consultant: Interim Director of Management Services

2.2. Consultant represents that it is fully qualified to perform such professional services by virtue of its experience and the training, education and expertise of its principals and employees. Consultant further represents that it is willing to accept responsibility for performing such services in accordance with the terms and conditions set forth in this Agreement.

2.3. Consultant represents that it has no known relationships with third parties, City Council members, or employees of City which would (1) present a conflict of interest with the rendering of services under this Agreement under Government Code Section 1090, the Political Reform Act (Government Code Section 81000 *et seq.*), or other applicable law, (2) prevent Consultant from performing the terms of this Agreement, or (3) present a significant opportunity for the disclosure of confidential information.

NOW, THEREFORE, for and in consideration of the mutual covenants and conditions herein contained, City and Consultant agree as follows:

3. DEFINITIONS

3.1. "Scope of Services": See Exhibit A

3.2. "Agreement Administrator": The Agreement Administrator for this project is Sean Joyce, Interim City Manager. The Agreement Administrator shall be the principal point of contact at the City for this project. All services under this Agreement shall be performed at the request of the Agreement Administrator. The Agreement Administrator will establish the timetable for completion of services and any interim milestones. City reserves the right to change this designation upon written notice to Consultant.

Docusign Envelope ID: B2575465-0155-4128-BF51-780083022DB0

3.3. "Approved Fee Schedule": Consultant's compensation rates are set forth in the fee schedule attached hereto as Exhibit B and incorporated herein by this reference. This fee schedule shall remain in effect for the duration of this Agreement unless modified in writing by mutual agreement of the parties.

3.4. "Maximum Amount": The highest total compensation and costs payable to Consultant by City under this Agreement. The Maximum Amount under this Agreement is Thirty Thousand Dollars ($30,000.00).

3.5. "Commencement Date": March 3, 2025

3.6. "Termination Date": June 30, 2025

4. TERM

The term of this Agreement shall commence at 12:00 a.m. on the Commencement Date and shall expire at 11:59 p.m. on the Termination Date unless extended by written agreement of the parties or terminated earlier under Section 18 ("Termination") below. Consultant may request extensions of time to perform the services required hereunder. Such extensions shall be effective if authorized in advance by City in writing and incorporated in written amendments to this Agreement.

5. CONSULTANT'S DUTIES

5.1. **Services**. Consultant shall perform the services identified in the Scope of Services. City shall have the right to request, in writing, changes in the Scope of Services. Any such changes mutually agreed upon by the parties, and any corresponding increase or decrease in compensation, shall be incorporated by written amendment to this Agreement.

5.2. **Coordination with City**. In performing services under this Agreement, Consultant shall coordinate all contact with City through its Agreement Administrator.

5.3. **Budgetary Notification**. Consultant shall notify the Agreement Administrator, in writing, when fees and expenses incurred under this Agreement have reached eighty percent (80%) of the Maximum Amount. Consultant shall concurrently inform the Agreement Administrator, in writing, of Consultant's estimate of total expenditures required to complete its current assignments before proceeding, when the remaining work on such assignments would exceed the Maximum Amount.

5.4. **Business License.** Consultant shall obtain and maintain in force a City business license for the duration of this Agreement.

Docusign Envelope ID: B2575465-0155-4128-BF51-780083022DB0

5.5. **Professional Standards.** Consultant shall perform all work to the standards of Consultant's profession and in a manner reasonably satisfactory to City. Consultant shall keep itself fully informed of and in compliance with all local, state, and federal laws, rules, and regulations in any manner affecting the performance of this Agreement, including all Cal/OSHA requirements, the conflict of interest provisions of Government Code § 1090 and the Political Reform Act (Government Code § 81000 et seq.).

5.6. **Avoid Conflicts.** During the term of this Agreement, Consultant shall not perform any work for another person or entity for whom Consultant was not working at the Commencement Date if such work would present a conflict interfering with performance under this Agreement. However, City may consent in writing to Consultant's performance of such work.

5.7. **Appropriate Personnel.** Consultant has, or will secure at its own expense, all personnel required to perform the services identified in the Scope of Services. All such services shall be performed by Consultant or under its supervision, and all personnel engaged in the work shall be qualified to perform such services. Josette Reina-Luken shall be Consultant's project administrator and shall have direct responsibility for management of Consultant's performance under this Agreement. No change shall be made in Consultant's project administrator without City's prior written consent.

5.8. **Substitution of Personnel.** Any persons named in the proposal or Scope of Services constitutes a promise to the City that those persons will perform and coordinate their respective services under this Agreement. Should one or more of such personnel become unavailable, Consultant may substitute other personnel of at least equal competence upon written approval of City. If City and Consultant cannot agree as to the substitution of key personnel, City may terminate this Agreement for cause.

5.9. **Permits and Approvals.** Consultant shall obtain, at its sole cost and expense, all permits and regulatory approvals necessary for Consultant's performance of this Agreement. This includes, but shall not be limited to, professional licenses, encroachment permits and building and safety permits and inspections.

5.10. **Notification of Organizational Changes.** Consultant shall notify the Agreement Administrator, in writing, of any change in name, ownership or control of Consultant's firm or of any subcontractor. Change of ownership or control of Consultant's firm may require an amendment to this Agreement.

5.11. **Records.** Consultant shall maintain any and all ledgers, books of account, invoices, vouchers, canceled checks, and other records or documents evidencing or relating to charges for services or expenditures and disbursements charged to City under this Agreement for a minimum of three (3) years, or for any longer period required by law, from the date of final payment to Consultant under this Agreement. All such documents shall be made available for inspection, audit, and/or copying at any time during regular business hours, upon oral or written request of City. In addition, pursuant to

Docusign Envelope ID: B2575465-0155-4128-BF51-780083022DB0

Government Code Section 8546.7, if the amount of public funds expended under this Agreement exceeds ten thousand dollars, all such documents and this Agreement shall be subject to the examination and audit of the State Auditor, at the request of City or as part of any audit of City, for a period of three (3) years after final payment under this Agreement.

6. SUBCONTRACTING

6.1. **General Prohibition.** This Agreement covers professional services of a specific and unique nature. Except as otherwise provided herein, Consultant shall not assign or transfer its interest in this Agreement or subcontract any services to be performed without amending this Agreement.

6.2. **Consultant Responsible.** Consultant shall be responsible to City for all services to be performed under this Agreement.

6.3. **Identification in Fee Schedule.** All subcontractors shall be specifically listed and their billing rates identified in the Approved Fee Schedule, Exhibit B. Any changes must be approved by the Agreement Administrator in writing as an amendment to this Agreement.

6.4. **Compensation for Subcontractors.** City shall pay Consultant for work performed by its subcontractors, if any, only at Consultant's actual cost plus an approved mark-up as set forth in the Approved Fee Schedule, Exhibit B. Consultant shall be liable and accountable for any and all payments, compensation, and federal and state taxes to all subcontractors performing services under this Agreement. City shall not be liable for any payment, compensation, or federal and state taxes for any subcontractors.

7. COMPENSATION

7.1. **General.** City agrees to compensate Consultant for the services provided under this Agreement, and Consultant agrees to accept payment in accordance with the Fee Schedule in full satisfaction for such services. Compensation shall not exceed the Maximum Amount. Consultant shall not be reimbursed for any expenses unless provided for in this Agreement or authorized in writing by City in advance.

7.2. **Invoices.** Consultant shall submit to City an invoice, on a monthly basis or as otherwise agreed to by the Agreement Administrator, for services performed pursuant to this Agreement. Each invoice shall identify the Maximum Amount, the services rendered during the billing period, the amount due for the invoice, and the total amount previously invoiced. All labor charges shall be itemized by employee name and classification/position with the firm, the corresponding hourly rate, the hours worked, a description of each labor charge, and the total amount due for labor charges.

Docusign Envelope ID: B2575465-0155-4128-BF51-780083022DB0

7.3. **Taxes.** City shall not withhold applicable taxes or other payroll deductions from payments made to Consultant except as otherwise required by law. Consultant shall be solely responsible for calculating, withholding, and paying all taxes.

7.4. **Disputes.** The parties agree to meet and confer at mutually agreeable times to resolve any disputed amounts contained in an invoice submitted by Consultant.

7.5. **Additional Work.** Consultant shall not be reimbursed for any expenses incurred for work performed outside the Scope of Services unless prior written approval is given by the City through a fully executed written amendment. Consultant shall not undertake any such work without prior written approval of the City.

7.6. **City Satisfaction as Precondition to Payment.** Notwithstanding any other terms of this Agreement, no payments shall be made to Consultant until City is satisfied that the services are satisfactory.

7.7. **Right to Withhold Payments.** If Consultant fails to provide a deposit or promptly satisfy an indemnity obligation described in Section 11, City shall have the right to withhold payments under this Agreement to offset that amount.

8. PREVAILING WAGES

Consultant is aware of the requirements of California Labor Code Section 1720, et seq., and 1770, et seq., as well as California Code of Regulations, Title 8, Section 16000, et seq., ("Prevailing Wage Laws"), which require the payment of prevailing wage rates and the performance of other requirements on certain "public works" and "maintenance" projects. Consultant shall defend, indemnify, and hold the City, tis elected officials, officers, employees, and agents free and harmless form any claim or liability arising out of any failure or alleged failure of Consultant to comply with the Prevailing Wage Laws.

9. OWNERSHIP OF WRITTEN PRODUCTS

All reports, documents or other written material ("written products" herein) developed by Consultant in the performance of this Agreement shall be and remain the property of City without restriction or limitation upon its use or dissemination by City except as provided by law. Consultant may take and retain copies of such written products as desired, but no such written products shall be the subject of a copyright application by Consultant.

10. RELATIONSHIP OF PARTIES

10.1. **General.** Consultant is, and shall at all times remain as to City, a wholly independent contractor.

Docusign Envelope ID: B2575465-0155-4128-BF51-780083022DB0

10.2. **No Agent Authority.** Consultant shall have no power to incur any debt, obligation, or liability on behalf of City or otherwise to act on behalf of City as an agent. Neither City nor any of its agents shall have control over the conduct of Consultant or any of Consultant's employees, except as set forth in this Agreement. Consultant shall not represent that it is, or that any of its agents or employees are, in any manner employees of City.

10.3. **Independent Contractor Status.** Under no circumstances shall Consultant or its employees look to the City as an employer. Consultant shall not be entitled to any benefits. City makes no representation as to the effect of this independent contractor relationship on Consultant's previously earned California Public Employees Retirement System ("CalPERS") retirement benefits, if any, and Consultant specifically assumes the responsibility for making such a determination. Consultant shall be responsible for all reports and obligations including, but not limited to: social security taxes, income tax withholding, unemployment insurance, disability insurance, and workers' compensation, and other applicable federal and state taxes.

10.4. **Indemnification of CalPERS Determination.** In the event that Consultant or any employee, agent, or subcontractor of Consultant providing services under this Agreement claims or is determined by a court of competent jurisdiction or CalPERS to be eligible for enrollment in CalPERS as an employee of the City, Consultant shall indemnify, defend, and hold harmless City for the payment of any employee and/or employer contributions for CalPERS benefits on behalf of Consultant or its employees, agents, or subcontractors, as well as for the payment of any penalties and interest on such contributions, which would otherwise be the responsibility of City.

11. INDEMNIFICATION

11.1 **Definitions.** For purposes of this Section 11, "Consultant" shall include Consultant, its officers, employees, servants, agents, or subcontractors, or anyone directly or indirectly employed by either Consultant or its subcontractors, in the performance of this Agreement. "City" shall include City, its officers, agents, employees and volunteers.

11.2 **Consultant to Indemnify City.** To the fullest extent permitted by law, Consultant shall indemnify, hold harmless, and defend City from and against any and all claims, losses, costs or expenses for any personal injury or property damage arising out of or in connection with Consultant's alleged negligence, recklessness or willful misconduct or other wrongful acts, errors or omissions of Consultant or failure to comply with any provision in this Agreement.

11.3 **Scope of Indemnity.** Personal injury shall include injury or damage due to death or injury to any person, whether physical, emotional, consequential or otherwise, Property damage shall include injury to any personal or real property. Consultant shall not be required to indemnify City for such loss or damage as is caused by the sole active negligence or willful misconduct of the City.

Docusign Envelope ID: B2575465-0155-4128-BF51-780083022DB0

11.4 **Attorneys Fees.** Such costs and expenses shall include reasonable attorneys' fees for counsel of City's choice, expert fees and all other costs and fees of litigation. Consultant shall not be entitled to any refund of attorneys' fees, defense costs or expenses in the event that it is adjudicated to have been non-negligent.

11.5 **Defense Deposit.** The City may request a deposit for defense costs from Consultant with respect to a claim. If the City requests a defense deposit, Consultant shall provide it within 15 days of the request.

11.6 **Waiver of Statutory Immunity.** The obligations of Consultant under this Section 11 are not limited by the provisions of any workers' compensation act or similar act. Consultant expressly waives its statutory immunity under such statutes or laws as to City.

11.7 **Indemnification by Subcontractors.** Consultant agrees to obtain executed indemnity agreements with provisions identical to those set forth here in this Section 11 from each and every subcontractor or any other person or entity involved in the performance of this Agreement on Consultant's behalf.

11.8 **Insurance Not a Substitute.** City does not waive any indemnity rights by accepting any insurance policy or certificate required pursuant to this Agreement. Consultant's indemnification obligations apply regardless of whether or not any insurance policies are determined to be applicable to the claim, demand, damage, liability, loss, cost or expense.

12. INSURANCE

12.1. **Insurance Required.** Consultant shall maintain insurance as described in this section and shall require all of its subcontractors, consultants, and other agents to do the same. Approval of the insurance by the City shall not relieve or decrease any liability of Consultant Any requirement for insurance to be maintained after completion of the work shall survive this Agreement.

12.2. **Documentation of Insurance.** City will not execute this agreement until it has received a complete set of all required documentation of insurance coverage. However, failure to obtain the required documents prior to the work beginning shall not waive the Consultant's obligation to provide them. Consultant shall file with City:

- Certificate of Insurance, indicating companies acceptable to City, with a Best's Rating of no less than A:VII showing. The Certificate of Insurance must include the following reference: Interim Director of Management Services.
- Documentation of Best's rating acceptable to the City.
- Original endorsements effecting coverage for all policies required by this Agreement.

Docusign Envelope ID: B2575465-0155-4128-BF51-780083022DB0

- City reserves the right to obtain a full certified copy of any Insurance policy and endorsements. Failure to exercise this right shall not constitute a waiver of the right to exercise later.

12.3. **Coverage Amounts.** Insurance coverage shall be at least in the following minimum amounts:

- Professional Liability Insurance: $1,000,000 per occurrence, $2,000,000 aggregate

- General Liability:
  - General Aggregate: $2,000,000
  - Products Comp/Op Aggregate $2,000,000
  - Personal & Advertising Injury $1,000,000
  - Each Occurrence $1,000,000
  - Fire Damage (any one fire) $ 100,000
  - Medical Expense (any 1 person) $ 10,000

Any available insurance proceeds broader than or in excess of the specified minimum insurance coverage requirements or limits shall be available to the additional insured. Furthermore, the requirements for coverage and limits shall be the greater of (1) the minimum coverage and limits specified in this Agreement, or (2) the broader coverage and maximum limits of coverage of any insurance policy or proceeds available to the named insured

12.4. **General Liability Insurance.** Commercial General Liability Insurance shall be no less broad than ISO form CG 00 01. Coverage must be on a standard Occurrence form. Claims-Made, modified, limited or restricted Occurrence forms are not acceptable.

12.5. **Worker's Compensation Insurance.** Consultant is aware of the provisions of Section 3700 of the Labor Code which requires every employer to carry Workers' Compensation (or to undertake equivalent self-insurance), and Consultant will comply with such provisions before commencing the performance of the work of this Agreement. If such insurance is underwritten by any agency other than the State Compensation Fund, such agency shall be a company authorized to do business in the State of California. If Consultant has no employees while performing services under this Agreement, workers' compensation policy is not required, but Consultant shall execute a declaration that it has no employees.

12.6. **Professional Liability Insurance or Errors & Omissions Coverage.** The deductible or self-insured retention may not exceed $50,000. If the insurance is on a Claims-Made basis, the retroactive date shall be no later than the commencement of the work. Coverage shall be continued for two years after the completion of the work by one of the following: (1) renewal of the existing policy; (2) an extended reporting period endorsement; or (3) replacement insurance with a retroactive date no later than the commencement of the work under this Agreement.

Docusign Envelope ID: B2575465-0155-4128-BF51-780083022DB0

12.7. **Claims-Made Policies.** If any of the required policies provide coverage on a claims-made basis the Retroactive Date must be shown and must be before the date of the contract or the beginning of contract work. Claims-Made Insurance must be maintained and evidence of insurance must be provided for at least five (5) years after completion of the contract of work. If coverage is canceled or non-renewed, and not replaced with another claims-made policy form with a Retroactive Date prior to the contract effective date, the Consultant must purchase "extended reporting" coverage for a minimum of five (5) years after completion of contract work.

12.8. **Additional Insured Endorsements.** The City, its City Council, Commissions, officers, and employees of South Pasadena must be endorsed as an additional insured for each policy required herein, other than Professional Errors and Omissions and Worker's Compensation, for liability arising out of ongoing and completed operations by or on behalf of the Consultant. Consultant's insurance policies shall be primary as respects any claims related to or as the result of the Consultant's work. Any insurance, pooled coverage or self-insurance maintained by the City, its elected or appointed officials, directors, officers, agents, employees, volunteers, or consultants shall be non-contributory. All endorsements shall be signed by a person authorized by the insurer to bind coverage on its behalf. General liability coverage can be provided using an endorsement to the Consultant's insurance at least as broad as ISO Form CG 20 10 11 85 or both CG 20 10 and CG 20 37.

12.9. **Failure to Maintain Coverage.** In the event any policy is canceled prior to the completion of the project and the Consultant does not furnish a new certificate of insurance prior to cancellation, City has the right, but not the duty, to obtain the required insurance and deduct the premium(s) from any amounts due the Consultant under this Agreement. Failure of the Consultant to maintain the insurance required by this Agreement, or to comply with any of the requirements of this section, shall constitute a material breach of this Agreement.

12.10. **Notices.** Contractor shall provide immediate written notice if (1) any of the required insurance policies is terminated; (2) the limits of any of the required policies are reduced; (3) or the deductible or self-insured retention is increased. Consultant shall provide no less than 30 days' notice of any cancellation or material change to policies required by this Agreement. Consultant shall provide proof that cancelled or expired policies of insurance have been renewed or replaced with other policies providing at least the same coverage. Such proof will be furnished at least two weeks prior to the expiration of the coverages. The name and address for Additional Insured Endorsements, Certificates of Insurance and Notices of Cancellation is: City of South Pasadena, Attn: Tina Lopez, Human Resources & Risk Manager, South Pasadena, CA 91030.

Docusign Envelope ID: B2575465-0155-4128-BF51-780083022DB0

12.11. **Consultant's Insurance Primary.** The insurance provided by Consultant, including all endorsements, shall be primary to any coverage available to City. Any insurance or self-insurance maintained by City and/or its officers, employees, agents or volunteers, shall be in excess of Consultant's insurance and shall not contribute with it.

12.12. **Waiver of Subrogation.** Consultant hereby waives all rights of subrogation against the City. Consultant shall additionally waive such rights either by endorsement to each policy or provide proof of such waiver in the policy itself.

12.13. **Report of Claims to City.** Consultant shall report to the City, in addition to the Consultant's insurer, any and all insurance claims submitted to Consultant's insurer in connection with the services under this Agreement.

12.14. **Premium Payments and Deductibles.** Consultant must disclose all deductibles and self-insured retention amounts to the City. The City may require the Consultant to provide proof of ability to pay losses and related investigations, claim administration, and defense expenses within retention amounts. Ultimately, City must approve all such amounts prior to execution of this Agreement.

City has no obligation to pay any premiums, assessments, or deductibles under any policy required in this Agreement. Consultant shall be responsible for all premiums and deductibles in all of Consultant's insurance policies. The amount of deductibles for insurance coverage required herein are subject to City's approval.

12.15. **Duty to Defend and Indemnify.** Consultant's duties to defend and indemnify City under this Agreement shall not be limited by the foregoing insurance requirements and shall survive the expiration of this Agreement.

13. MUTUAL COOPERATION

13.1. **City Cooperation in Performance.** City shall provide Consultant with all pertinent data, documents and other requested information as is reasonably available for the proper performance of Consultant's services under this Agreement.

13.2. **Consultant Cooperation in Defense of Claims.** If any claim or action is brought against City relating to Consultant's performance in connection with this Agreement, Consultant shall render any reasonable assistance that City may require in the defense of that claim or action.

14. NOTICES

Any notices, bills, invoices, or reports required by this Agreement shall be deemed received on: (i) the day of delivery if delivered by hand, facsimile or overnight courier service during Consultant's and City's regular business hours; or (ii) on the third business day following deposit in the United States mail if delivered by mail, postage

Docusign Envelope ID: B2575465-0155-4128-BF51-780083022DB0

prepaid, to the addresses listed below (or to such other addresses as the parties may, from time to time, designate in writing).

If to City

Sean Joyce, Interim City Manager
City of South Pasadena
1414 Mission Street
South Pasadena, CA 91030
Telephone: (626) 403-****
Facsimile: (626) 403-7241

If to Consultant

Josette Reina-Luken
MNJ Advisors, Inc.
4112 Enchanted Circle
Roseville, CA 95747
Telephone: (916) 539-3510

With courtesy copy to:

Roxanne Diaz
South Pasadena City Attorney
Richards Watson Gershon
350 South Grand Ave., 37th Floor
Telephone: (213) 626-8484

15. SURVIVING COVENANTS

The parties agree that the covenants contained in paragraph 5.11 (Records), paragraph 10.4 (Indemnification of CalPERS Determination), Section 11 (Indemnity), paragraph 12.8 (Claims-Made Policies), paragraph 13.2 (Consultant Cooperation in Defense of Claims), and paragraph 18.1 (Confidentiality) of this Agreement shall survive the expiration or termination of this Agreement, subject to the provisions and limitations of this Agreement and all otherwise applicable statutes of limitations and repose.

16. TERMINATION

16.1. **City Termination.** City may terminate this Agreement for any reason on fifteen (15) calendar days' written notice to Consultant. Consultant agrees to cease all work under this Agreement on or before the effective date of any notice of termination. All City data, documents, objects, materials or other tangible things shall be returned to City upon the termination or expiration of this Agreement.

16.2. **Consultant Termination.** Consultant may terminate this Agreement for a material breach of this Agreement upon fifteen (15) days' notice.

16.3. **Compensation Following Termination.** Upon termination, Consultant shall be paid based on the work satisfactorily performed at the time of termination. In no event shall Consultant be entitled to receive more than the amount that would be paid to Consultant for the full performance of the services required by this Agreement. The City shall have

Docusign Envelope ID: B2575465-0155-4128-BF51-780083022DB0

the benefit of such work as may have been completed up to the time of such termination.

16.4. **Remedies.** City retains any and all available legal and equitable remedies for Consultant's breach of this Agreement.

17. INTERPRETATION OF AGREEMENT

17.1. **Governing Law.** This Agreement shall be governed and construed in accordance with the laws of the State of California.

17.2. **Integration of Exhibits.** All documents referenced as exhibits in this Agreement are hereby incorporated into this Agreement. In the event of any material discrepancy between the express provisions of this Agreement and the provisions of any document incorporated herein by reference, the provisions of this Agreement shall prevail. This instrument contains the entire Agreement between City and Consultant with respect to the transactions contemplated herein. No other prior oral or written agreements are binding upon the parties. Amendments hereto or deviations here from shall be effective and binding only if made in writing and executed on by City and Consultant.

17.3. **Headings.** The headings and captions appearing at the commencement of the sections hereof, and in any paragraph thereof, are descriptive only and for convenience in reference to this Agreement. Should there be any conflict between such heading, and the section or paragraph thereof at the head of which it appears, the language of the section or paragraph shall control and govern in the construction of this Agreement.

17.4. **Pronouns.** Masculine or feminine pronouns shall be substituted for the neuter form and vice versa, and the plural shall be substituted for the singular form and vice versa, in any place or places herein in which the context requires such substitution(s).

17.5. **Severability.** If any term or provision of this Agreement or the application thereof to any person or circumstance shall, to any extent, be invalid or unenforceable, then such term or provision shall be amended to, and solely to the extent necessary to, cure such invalidity or unenforceability, and shall be enforceable in its amended form. In such event, the remainder of this Agreement, or the application of such term or provision to persons or circumstances other than those as to which it is held invalid or unenforceable, shall not be affected, and each term and provision of this Agreement shall be valid and be enforced to the fullest extent permitted by law.

17.6. **No Presumption Against Drafter.** Each party had an opportunity to consult with an attorney in reviewing and drafting this agreement. Any uncertainty or ambiguity shall not be construed for or against any party based on attribution of drafting to any party.

Docusign Envelope ID: B2575465-0155-4128-BF51-780083022DB0

18. GENERAL PROVISIONS

18.1. **Confidentiality.** All data, documents, discussion, or other information developed or received by Consultant for performance of this Agreement are deemed confidential and Consultant shall not disclose it without prior written consent by City. City shall grant such consent if disclosure is legally required. All City data shall be returned to City upon the termination or expiration of this Agreement.

18.2. **Conflicts of Interest.** Consultant maintains and warrants that it has not employed nor retained any company or person, other than a bona fide employee working solely for Consultant, to solicit or secure this Agreement. Further, Consultant warrants that it has not paid nor has it agreed to pay any company or person, other than a bona fide employee working solely for Consultant, any fee, commission, percentage, brokerage fee, gift or other consideration contingent upon or resulting from the award or making of this Agreement. Consultant further agrees to file, or shall cause its employees or subcontractor to file, a Statement of Economic Interest with the City's Filing Officer if required under state law in the performance of the services. For breach or violation of this warranty, City shall have the right to rescind this Agreement without liability. For the term of this Agreement, no member, officer, or employee of City, during the term of his or her service with City, shall have any direct interest in this Agreement, or obtain any present or anticipated material benefit arising therefrom.

18.3. **Non-assignment.** Consultant shall not delegate, transfer, subcontract or assign its duties or rights hereunder, either in whole or in part, without City's prior written consent, and any attempt to do so shall be void and of no effect. City shall not be obligated or liable under this Agreement to any party other than Consultant.

18.4. **Binding on Successors.** This Agreement shall be binding on the successors and assigns of the parties.

18.5. **No Third-Party Beneficiaries.** Except as expressly stated herein, there is no intended third-party beneficiary of any right or obligation assumed by the parties.

18.6. **Time of the Essence.** Time is of the essence for each and every provision of this Agreement.

18.7. **Non-Discrimination.** Consultant shall not discriminate against any employee or applicant for employment because of race, sex (including pregnancy, childbirth, or related medical condition), creed, national origin, color, disability as defined by law, disabled veteran status, Vietnam veteran status, religion, age (40 and above), medical condition (cancer-related), marital status, ancestry, or sexual orientation. Employment actions to which this provision applies shall include, but not be limited to, the following: employment, upgrading, demotion, or transfer; recruitment or recruitment advertising; layoff or termination; rates of pay or other forms of compensation; or in terms, conditions or privileges of employment, and selection for training. Consultant

Docusign Envelope ID: B2575465-0155-4128-BF51-780083022DB0

agrees to post in conspicuous places, available to employees and applicants for employment, the provisions of this nondiscrimination clause.

18.8. **Waiver.** No provision, covenant, or condition of this Agreement shall be deemed to have been waived by City or Consultant unless in writing signed by one authorized to bind the party asserted to have consented to the waiver. The waiver by City or Consultant of any breach of any provision, covenant, or condition of this Agreement shall not be deemed to be a waiver of any subsequent breach of the same or any other provision, covenant, or condition.

18.9. **Excused Failure to Perform.** Consultant shall not be liable for any failure to perform if Consultant presents acceptable evidence, in City's sole judgment, that such failure was due to causes beyond the control and without the fault or negligence of Consultant.

18.10. **Remedies Non-Exclusive.** Each right, power and remedy provided for herein or now or hereafter existing at law, in equity, by statute, or otherwise shall be cumulative and shall be in addition to every other right, power, or remedy provided for herein or now or hereafter existing at law, in equity, by statute, or otherwise. The exercise, the commencement of the exercise, or the forbearance from the exercise by any party of any one or more of such rights, powers or remedies shall not preclude the simultaneous or later exercise by such party of any or all of such other rights, powers or remedies.

18.11. **Attorneys' Fees.** If legal action shall be necessary to enforce any term, covenant or condition contained in this Agreement, the prevailing party shall be entitled to an award of reasonable attorneys' fees and costs expended in the action.

18.12. **Venue.** The venue for any litigation shall be Los Angeles County, California and Consultant hereby consents to jurisdiction in Los Angeles County for purposes of resolving any dispute or enforcing any obligation arising under this Agreement.

TO EFFECTUATE THIS AGREEMENT, the parties have caused their duly authorized representatives to execute this Agreement on the dates set forth below.

SIGNATURES ON THE FOLLOWING PAGE

Docusign Envelope ID: B2575465-0155-4128-BF51-780083022DB0

"City"
City of South Pasadena

By: Signed by: Sean Joyce 0D867796FCFE42A...
Signature

Printed: Sean Joyce

Title: Interim City Manager

Date: 2/26/2025

"Consultant"
MNJ Advisors, Inc.

By: Josette Reina-Luken
Signature

Printed: Josette Reina-Luken

Title: Vice-President

Date: 02·26·2025

Attest:

By: Signed by: Alma Medina 115BF030396641E... Alma Medina for
Mark Perez
Deputy City Clerk

Date: 2/26/2025

Approved as to form:

By: DocuSigned by: Roxanne Diaz A7800E5CA8A241F...
Roxanne Diaz, City Attorney

Date: 2/26/2025

Docusign Envelope ID: B2575465-0155-4128-BF51-780083022DB0

Exhibit A

Scope of Services

Serve as and fulfill the duties of the Interim Management Services Director with emphasis on timely completion of the FY2024-25 mid-year budget update and FY2025-26 budget development.

Onsite services will be provided for the initial 2-3 weeks, and the remainder of services will be provided either onsite or remote. Remote work will be specifically set for March 17-26 and April 29th. Work hours may be adjusted to accommodate the budget; the City works on a 4/10 workweek schedule (Monday-Thursday, 10 hours per day). Consultant may work less than 40 hours per week depending on the workload.

Docusign Envelope ID: B2575465-0155-4128-BF51-780083022DB0

Exhibit B

Fee Schedule

Billable hourly rate of $150 per hour for offsite work and/or $200 per hour for onsite work (travel expenses included in the onsite rate).

Docusign Envelope ID: B2575465-0155-4128-BF51-780083022DB0

CERTIFICATE OF LIABILITY INSURANCE

DATE (MM/DD/YYYY): 02/25/2025

THIS CERTIFICATE IS ISSUED AS A MATTER OF INFORMATION ONLY AND CONFERS NO RIGHTS UPON THE CERTIFICATE HOLDER. THIS CERTIFICATE DOES NOT AFFIRMATIVELY OR NEGATIVELY AMEND, EXTEND OR ALTER THE COVERAGE AFFORDED BY THE POLICIES BELOW. THIS CERTIFICATE OF INSURANCE DOES NOT CONSTITUTE A CONTRACT BETWEEN THE ISSUING INSURER(S), AUTHORIZED REPRESENTATIVE OR PRODUCER, AND THE CERTIFICATE HOLDER.

IMPORTANT: If the certificate holder is an ADDITIONAL INSURED, the policy(ies) must have ADDITIONAL INSURED provisions or be endorsed. If SUBROGATION IS WAIVED, subject to the terms and conditions of the policy, certain policies may require an endorsement. A statement on this certificate does not confer rights to the certificate holder in lieu of such endorsement(s).

PRODUCER	CONTACT NAME:	
Next First Insurance Agency, Inc. PO Box 60787 Palo Alto, CA 94306	PHONE (A/C, No, Ext): (855) 222-5919	FAX (A/C, No):
	E-MAIL ADDRESS: support@nextinsurance.com	

INSURER(S) AFFORDING COVERAGE	NAIC #
INSURER A : State National Insurance Company, Inc.	12831
INSURER B :	
INSURER C :	
INSURER D :	
INSURER E :	
INSURER F :	

INSURED
Michael Luken
MNJ Advisors
6160 Rose Garden Ln
Roseville, CA 95747

COVERAGES **CERTIFICATE NUMBER:** 435683699 **REVISION NUMBER:**

THIS IS TO CERTIFY THAT THE POLICIES OF INSURANCE LISTED BELOW HAVE BEEN ISSUED TO THE INSURED NAMED ABOVE FOR THE POLICY PERIOD INDICATED. NOTWITHSTANDING ANY REQUIREMENT, TERM OR CONDITION OF ANY CONTRACT OR OTHER DOCUMENT WITH RESPECT TO WHICH THIS CERTIFICATE MAY BE ISSUED OR MAY PERTAIN, THE INSURANCE AFFORDED BY THE POLICIES DESCRIBED HEREIN IS SUBJECT TO ALL THE TERMS, EXCLUSIONS AND CONDITIONS OF SUCH POLICIES. LIMITS SHOWN MAY HAVE BEEN REDUCED BY PAID CLAIMS.

INSR LTR	TYPE OF INSURANCE	ADDL INSD	SUBR WVD	POLICY NUMBER	POLICY EFF (MM/DD/YYYY)	POLICY EXP (MM/DD/YYYY)	LIMITS	
A	X COMMERCIAL GENERAL LIABILITY CLAIMS-MADE X OCCUR GEN'L AGGREGATE LIMIT APPLIES PER: X POLICY PRO-JECT LOC OTHER:	X	X	NXT9FV43WW-01-GL	01/02/2025	01/02/2026	EACH OCCURRENCE DAMAGE TO RENTED PREMISES (Ea occurrence) MED EXP (Any one person) PERSONAL & ADV INJURY GENERAL AGGREGATE PRODUCTS - COMP/OP AGG $	$1,000,000.00 $100,000.00 $15,000.00 $1,000,000.00 $2,000,000.00 $2,000,000.00 $
	AUTOMOBILE LIABILITY ANY AUTO OWNED AUTOS ONLY HIRED AUTOS ONLY SCHEDULED AUTOS NON-OWNED AUTOS ONLY						COMBINED SINGLE LIMIT (Ea accident) BODILY INJURY (Per person) BODILY INJURY (Per accident) PROPERTY DAMAGE (Per accident) $	$ $ $ $ $
	UMBRELLA LIAB OCCUR EXCESS LIAB CLAIMS-MADE DED RETENTION $						EACH OCCURRENCE AGGREGATE $	$ $ $
	WORKERS COMPENSATION AND EMPLOYERS' LIABILITY Y / N ANYPROPRIETOR/PARTNER/EXECUTIVE OFFICER/MEMBER EXCLUDED? N / A (Mandatory in NH) If yes, describe under DESCRIPTION OF OPERATIONS below						PER STATUTE OTH-ER E.L. EACH ACCIDENT E.L. DISEASE - EA EMPLOYEE E.L. DISEASE - POLICY LIMIT	 $ $ $
A	Professional Liability	X		NXT9FV43WW-01-GL	01/02/2025	01/02/2026	Each Occurrence: Aggregate:	$1,000,000.00 $2,000,000.00

DESCRIPTION OF OPERATIONS / LOCATIONS / VEHICLES (ACORD 101, Additional Remarks Schedule, may be attached if more space is required)

The Certificate Holder is The City of South Pasadena, its City Council, Commissions, officers, and employees. A Waiver of Subrogation applies in favor of this Certificate Holder on the following policies: General Liability. This Certificate Holder is an Additional Insured on the General Liability policy on a primary and non-contributory basis. NEXT will endeavor to provide this Certificate Holder with written notice of cancellation 30 days in advance for any of the following policies: General Liability. All Certificate Holder privileges apply only if required by written agreement between the Certificate Holder and the insured, and are subject to policy terms and conditions.

CERTIFICATE HOLDER

The City of South Pasadena, its City Council, Commissions, officers, and employees
1414 Mission St
South Pasadena, CA 91030

LIVE CERTIFICATE
Click or scan to view

CANCELLATION

SHOULD ANY OF THE ABOVE DESCRIBED POLICIES BE CANCELLED BEFORE THE EXPIRATION DATE THEREOF, NOTICE WILL BE DELIVERED IN ACCORDANCE WITH THE POLICY PROVISIONS.

AUTHORIZED REPRESENTATIVE

© 1988-2015 ACORD CORPORATION. All rights reserved.

Docusign Envelope ID: B2575465-0155-4128-BF51-780083022DB0



MNJ Advisors Inc.

February 25, 2025

Tina Lopez, Human Resources and Risk Manager
City of South Pasadena
1414 Mission St
South Pasadena, CA 91030

Subject – Auto Liability Coverage
City of South Pasadena

Dear Ms. Lopez :

Our firm, MNJ Advisors Inc., does not have any commercial vehicles. We only use our personal vehicles.

Sincerely,

Signed by:
9B6742D92D614F0...
Michael W. Luken
President/CEO

6160 ROSE GARDEN LANE, ROSEVILLE, CA. 95747-8046
T (916)997-2760

The certificate must include:

Additional Requirements:

Following Endorsements Required:

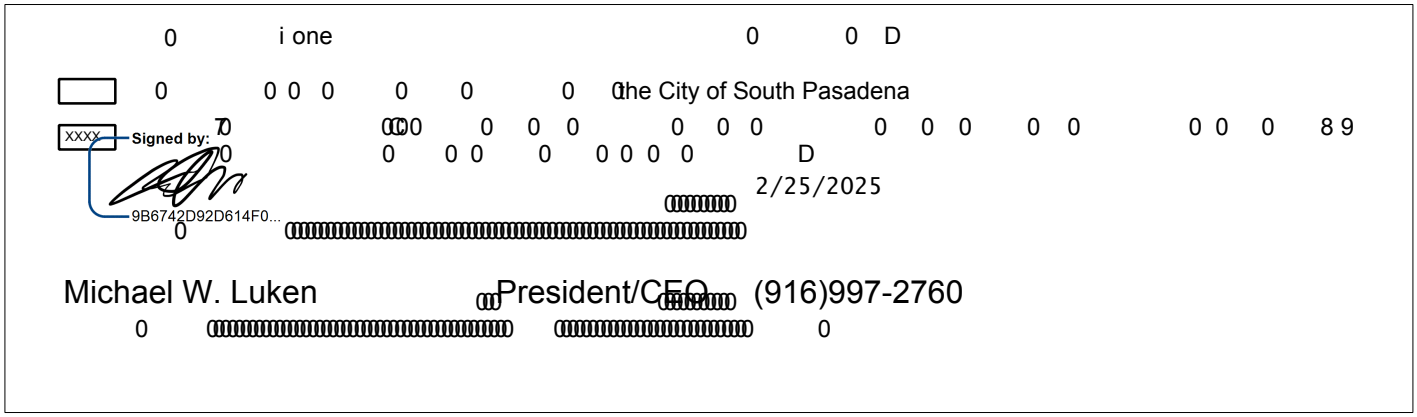

Contact Information

If any of the information shown below is a) missing or b) incorrect, please complete or correct it and return it along with your certificate.

City Council Agenda Report

ITEM NO. 7

DATE: June 18, 2025

FROM: Todd Hileman, City Manager

PREPARED BY: Hector Gomez, Chief City Clerk

SUBJECT: **CONSIDERATION OF APPROVAL OF THE SPECIAL JOINT CITY COUNCIL AND FINANCE COMMISSION MEETING MINUTES AND REGULAR CITY COUNCIL MEETING MINUTES FOR JUNE 4, 2025**

Recommendation
It is recommended that the City Council approve the minutes from the Special Joint City Council and Finance Commission Meeting and Regular City Council Meeting held on June 4, 2025.

Executive Summary
Attached for the City Council's consideration and approval are meeting minutes, and hereby included as attachments to this staff report.

Background
The City Clerk's Division is responsible for producing meeting minutes for the City Council meetings. Meeting minutes serve as the official record of actions taken by the City at the direction of the City Council.

Fiscal Impact
There is no fiscal impact; budgeted staff completes this work.

Key Performance Indicators and Strategic Plan
This item aligns with the Management Services Department's Key Performance Indicator to provide quick access to information and accountability, ensuring public transparency.

Attachment:
Attachment No. 1 - June 4, 2025, Regular City Council Meeting Minutes
Attachment No. 2 - June 4, 2025, Special Joint City Council Meeting Minutes with the Finance Commission

CITY OF SOUTH PASADENA
CITY COUNCIL - REGULAR MEETING

M I N U T E S
WEDNESDAY, JUNE 4, 2025, AT 7:00 P.M.

CALL TO ORDER:

The Regular Meeting of the South Pasadena City Council was called to order by Mayor Braun on Wednesday, June 4, 2025, at 7:07 P.M. The City Council Chambers are located at 1424 Mission Street, South Pasadena, California.

ROLL CALL:

PRESENT	Mayor	Janet Braun
	Mayor Pro Tem	Sheila Rossi
	Councilmember	Michael A. Cacciotti
	Councilmember	Jon Primuth
	Councilmember	Omari Ferguson
ABSENT	None.	

Mark Perez, Deputy City Clerk announced a quorum.

CITY STAFF PRESENT:

Todd Hileman, City Manager; Roxanne Diaz, City Attorney; Mark Perez, Deputy City Clerk were present at Roll Call. Other staff members presented reports or responded to questions as indicated in the minutes.

PLEDGE OF ALLEGIANCE

The Flag Salute was led by Mayor Pro Tem Rossi.

CLOSED SESSION ANNOUNCEMENTS

1. CLOSED SESSION ANNOUNCEMENTS

A. <u>REAL PROPERTY NEGOTIATORS</u>
Government Code Section 54956.8

Housing Authority Property Addresses:
- 1503 El Centro Street, APN: 5315-003-903;
- 1507 El Centro Street, APNs: 5315-003-904 and 5315-003-902

Agency Negotiator: Todd Hileman, Executive Director/ City Manager
Negotiating Party: Related SoCal Development, LLC
Under Negotiation: Price and Terms of Payment

City Attorney Roxanne Diaz stated that no reportable action was taken during the closed session.

PUBLIC COMMENT

2. PUBLIC COMMENT – GENERAL (NON-AGENDA ITEMS)

<u>In Person Public Comments</u>

Yvonne L. spoke regarding senior citizens and those with impairments and inclusiveness.

Sam B. spoke thanked Public Works Director Ted Gerber for his service to the City.

Michael T. spoke regarding the dangers of wildfires.

Josh B. spoke regarding the City's Financial Policies.

Christopher S. spoke regarding the YMCA.

<u>Zoom Public Comments</u>

Eric D. spoke expressed his appreciation of Public Works Director Ted Gerber and his service.

PRESENTATIONS

3. 4th OF JULY POSTER CONTEST

Melissa Snyder, Deputy Community Services Director announced the 4th of July Poster Contest winners.

The City Council convened the Special Joint City Council and Finance Commission Meeting at 7:27 P.M. At 10:16 P.M., the City Council reconvened the Regular City Council Meeting.

CHANGES TO THE AGENDA

4. REORDERING OF, ADDITIONS, OR DELETIONS TO THE AGENDA

None.

CONSENT CALENDAR

Item No. 12 was pulled for separate discussion via public comment. A motion was made by Councilmember Cacciotti and seconded by Councilmember Primuth to approve Item Nos. 5-11, and 13-17 of the consent calendar, as amended by the additional documents. The motion carried 5-0, by the following vote:

AYES: Cacciotti, Ferguson, Primuth, Rossi, Mayor Braun
NOES: None.
ABSENT: None.
ABSTAINED: None.

5. CONSIDERATION OF THE APPROVAL OF PREPAID WARRANTS IN THE AMOUNT OF $134,819.19; GENERAL CITY WARRANTS IN THE AMOUNT OF $627,375.55; ONLINE PAYMENTS IN THE AMOUNT OF $ 114,012.50; VOIDS IN THE AMOUNT OF ($590.00); PAYROLL IN THE AMOUNT OF $1,058,065.76; TRANSFER TO LAIF $20,000,000.00

Recommendation
It is recommended that the City Council approve the Warrants as presented.

A motion was made to approve the recommendation on the Consent Calendar.

6. CONSIDERATION OF APPROVAL OF THE SPECIAL JOINT CITY COUNCIL AND PLANNING COMMISSION MEETING MINUTES FOR MARCH 26, 2025

Recommendation
It is recommended that the City Council approve the minutes from the Special Joint City Council and Planning Commission Meeting held on March 26, 2025.

A motion was made to approve the recommendation on the Consent Calendar.

7. CONSIDERATION OF A CONTRACT AWARD TO WEST COAST ARBORISTS, INC. FOR URBAN FORESTRY SERVICES IN THE AMOUNT OF $567,500 IN FISCAL YEAR 2025-2206, WITH OPTIONS TO RENEW THE CONTRACT IN FISCAL YEARS 2026-2027 AND AGAIN IN 2027-2028

Recommendation

It is recommended that the City Council:

1. Award a contract to West Coast Arborists, Inc. (Contractor) to provide urban forestry services to the City for an amount of $567,500 in Fiscal Year 2025-2026, with an option to renew the agreement in years FY 2026-2027 and FY 2027-2028, and allowing a Consumer Price Index (CPI) increase to the rates and contract value in those years; and find that compliance with competitive bidding is not in the best interest of the City as set forth in the agenda report; and
2. Authorize the City Manager to enter into a maintenance agreement with West Coast Arborists, Inc. in the form approved by the City Attorney and City Manager and execute any related documents.

A motion was made to approve the recommendation on the Consent Calendar.

8. CONSIDERATION OF A CONTRACT AWARD TO BASE HILL, INC. FOR JANITORIAL SERVICES IN THE AMOUNT OF $220,000 IN FISCAL YEAR 2025-2026, WITH OPTION TO RENEW THE CONTRACT FOR AN ADDITIONAL TWO YEARS

Recommendation

It is recommended that the City Council:

1. Award a contract to Base Hill, Inc. (Contractor) to provide janitorial services to the City for an amount of $220,000 in Fiscal Year 2025-2026, with an option to renew the agreement in years FY 2026-2027 and FY 2027-2028, and allowing a Consumer Price Index (CPI) increase to the rates in those years, not to exceed 3.0% and find that compliance with competitive bidding is not in the best interest of the City as set forth in the agenda report; and
2. Authorize the City Manager to enter into a maintenance agreement with Base Hill, Inc. and execute any related documents.

A motion was made to approve the recommendation on the Consent Calendar as amended by the additional document.

9. CONSIDER THE APPROPRIATION OF COPS GRANT FUNDS IN THE AMOUNT OF $270,999.86 FOR THE DEPARTMENTS' COMPUTER-AIDED DISPATCH AND RECORDS MANAGEMENT SYSTEM SUBSCRIPTION COST WITH MOTOROLA SOLUTIONS INC.

Recommendation

It is recommended that the City Council appropriate $270,999.86 to Account No. 272-4010-4018-8520-000 (Equipment – AB 3229) to pay off the remaining balance of subscription payments (4,5 and 6 of 6) to support the Computer Aided Dispatch (CAD) /Records Management System (RMS) with Motorola Solutions Inc.

A motion was made to approve the recommendation on the Consent Calendar.

10. CONSIDERATION OF ADOPTION OF A RESOLUTION APPROVING THE FISCAL YEAR 2025-2026 PROJECT LIST AND EXPENDITURE PLAN TO BE FUNDED BY SENATE BILL 1 (SB 1) ROAD REPAIR AND ACCOUNTABILITY ACT OF 2017

Recommendation

It is recommended that the City Council:

1. Receive a staff presentation and consider providing direction on a proposed Street Improvement Program;
2. Adopt a resolution approving the Fiscal Year (FY) 2025-2026 project list and expenditure plan for the Senate Bill 1 (SB 1) Road Repair and Accountability Act of 2017 (SB 1) to be funded through the State's Road Maintenance and Rehabilitation Account (RMRA); and
3. Authorize the City Manager and his designee to sign the application and all related program documents.

A motion was made to approve the recommendation on the Consent Calendar.

Resolution No. 7905 was adopted.

11. CONSIDERATION OF APPROVING A PUBLIC HEALTH SERVICES CONTRACT WITH THE LOS ANGELES COUNTY DEPARTMENT OF PUBLIC HEALTH

Recommendation

Staff recommends approval of the public health services contract between the City of South Pasadena and the Los Angeles County Department of Public Health for the provision of public health services.

A motion was made to approve the recommendation on the Consent Calendar.

12. CONSIDERATION OF APPROVAL OF AMENDMENT TO PROFESSIONAL SERVICES AGREEMENT WITH CORE ELEMENT, LLC DBA EVANSON ASSOCIATES, IN THE AMOUNT OF $45,000, FOR A NEW TOTAL CONTRACT AMOUNT NOT TO EXCEED OF $60,000, FOR INTERIM COMMUNITY DEVELOPMENT DIRECTOR SERVICES

Recommendation
It is recommended that the City Council approval of the proposed amendment to the Professional Services Agreement with Core Element, LLC dba Evanson Associates, in the amount of $45,000, for a new total contract amount of $60,000 and modify the term end date to June 6, 2025 for interim Community Development Director services.

The City Attorney gave a brief report and informed the City Council of a math error in the agenda report and agreement and stated that the new contract amount is $75,000 not $60,000. The City Attorney recommended that the City Council approve the proposed amendment for a new total contract amount of $75,000 and authorize the City Attorney to make the appropriate revisions to the contract amendment.

Zoom Public Comments
Yvonne L. spoke regarding the item.

COUNCIL MOTION AND ACTION

A motion was made by Councilmember Cacciotti and seconded by Mayor Pro Tem Rossi to approve Item No. 12, with the following amendments to the agreement:

- **The Not-to-exceed amount is $75,000**
- **The City Attorney is directed to make the necessary changes to the amendment.**

The motion carried 5-0, by the following vote:

AYES: Cacciotti, Ferguson, Primuth, Rossi, Mayor Braun
NOES: None.
ABSENT: None.
ABSTAINED: None.

13. CONSIDERATION OF APPROVAL OF A FOURTH AMENDMENT TO THE PROFESSIONAL SERVICES AGREEMENT FOR PROFESSIONAL PRODUCTION SERVICES WITH STUDIO SPECTRUM, INC.

Recommendation
It is recommended that the City Council approve the proposed Fourth Amendment and all necessary documents to amend the Professional Services Agreement with Studio Spectrum, Inc., to extend the agreement's term to June 30, 2026, to continue providing professional production services.

A motion was made to approve the recommendation on the Consent Calendar as amended by the additional document.

14. CONSIDERATION OF A RESOLUTION APPROVING A SALARY RANGE ADJUSTMENT AND UPDATED SALARY RANGE FOR THE ACCOUNTING MANAGER-CONTROLLER, ASSOCIATE CIVIL ENGINEER, SENIOR PLANNER, AND APPROVING THE ALLOCATION OF FUNDS

Recommendation

It is recommended that the City Council consider adoption of the proposed Resolution to:

1. Approve the salary adjustment and updated salary range for the Accounting Manager-Controller;
2. Approve the salary adjustment and updated salary range for the Associate Civil Engineer;
3. Approve the salary adjustment and updated salary range for the Senior Planner, and
4. Approve the allocation of funds from the Special/Enterprise Funds and General Fund to support the changes.

A motion was made to approve the recommendation on the Consent Calendar.

Resolution No. 7906 was adopted.

15. CONSIDERATION OF THE ADOPTION OF A RESOLUTION APPROVING THE FISCAL YEAR 2025-2026 ENGINEER'S REPORT, DECLARING THE CITY'S INTENTION TO PROVIDE FOR AN ANNUAL LEVY AND COLLECTION OF ASSESSMENTS AND SETTING A DATE AND TIME FOR A PUBLIC HEARING FOR THE FY 2025-2026 LIGHTING AND LANDSCAPING MAINTENANCE DISTRICT

Recommendation

It is recommended that the City Council:

1. Adopt the attached resolution approving the Fiscal Year (FY) 2025-2026 Engineer's Report declaring the City of South Pasadena's intention to provide for an annual levy and collection of assessments; and
2. Schedule the Public Hearing for the FY 2025-2026 Lighting and Landscaping Maintenance District (LLMD) for July 16, 2025, at 7:00 p.m. in the Council Chambers.

A motion was made to approve the recommendation on the Consent Calendar.

Resolution No. 7907 was adopted.

16. CONSIDERATION OF AWARD OF A $123,305 PURCHASE ORDER TO CONVERGINT TECHNOLOGIES, LLC FOR THE PURCHASE OF A GENETEC SYNERGIS ACCESS CONTROL SYSTEM INTEGRATED WITH HIGH-DEFINITION VIDEO SURVEILLANCE AND EMERGENCY RESPONSE SYSTEM, AND

RELATED INSTALLATION SERVICES, REPLACING THE EXISTING CAMERA MONITORING SYSTEM AT THE SOUTH PASADENA LIBRARY AND UTILIZING THE SOURCEWELL COOPERATIVE PURCHASING PROGRAM

Recommendation

It is recommended that the City Council consider:

1. Authorizing the use of the Sourcewell cooperative purchasing program for the procurement of the equipment pursuant to Section 2.99-19(19) and the City's Purchasing Policy;Approving the purchase order to Convergint Technologies, LLC, in an amount not to exceed $123,305, for the purchase of an electronic access control systems, high-definition surveillance equipment, and emergency response upgrades at the South Pasadena Library, as well as related installation services.
2. Authorizing the City Manager to issue the purchase order and complete and execute all associated documents necessary to complete the project.

A motion was made to approve the recommendation on the Consent Calendar.

17. ADOPTION OF A RESOLUTION ESTABLISHING THE APPROPRIATION LIMIT FOR FISCAL YEAR 2025-2026 (GANN LIMIT)

Recommendation

It is recommended that the City Council adopt the Resolution establishing the appropriations limit, known as the Gann Limit, for fiscal year 2025-2026.

A motion was made to approve the recommendation on the Consent Calendar as amended by the additional document.

Resolution No. 7908 was adopted.

PUBLIC HEARING

18. PUBLIC HEARING TO ADOPT A RESOLUTION APPROVING PARTICIPATION IN THE LOS ANGELES URBAN COUNTY PERMANENT LOCAL HOUSING ALLOCATION (PLHA) PROGRAM BY AUTHORIZING THE MAYOR, OR DESIGNEE, TO SIGN A REIMBURSABLE CONTRACT WITH THE LOS ANGELES COUNTY DEVELOPMENT AUTHORITY (LACDA)

Recommendation

It is recommended that the City Council conduct a public hearing and adopt the proposed resolution, approving the City's participation in the Los Angeles Urban County Permanent Local Housing Allocation (PLHA) Program by authorizing the Mayor, or Designee, to sign a reimbursable contract with the Los Angeles County Development Authority (LACDA).

Eduardo Lizarraga, Senior Management Analyst, gave a presentation and responded to questions from the City Council.

The Mayor opened the Public Hearing at 10:30 P.M.

Zoom Public Comment

Steven L. spoke regarding the item.

The Mayor closed the Public Hearing at 10:35 P.M.

COUNCIL MOTION AND ACTION

A motion was made by Councilmember Cacciotti and seconded by Councilmember Ferguson to approve Item No. 18, as presented. The motion carried 5-0, by the following vote:

AYES: Cacciotti, Ferguson, Primuth, Rossi, Mayor Braun
NOES: None.
ABSENT: None.
ABSTAINED: None.

Resolution No. 7909 was adopted.

ACTION/DISCUSSION

19. CONSIDERATION OF ADOPTION OF A RESOLUTION AUTHORIZING FISCAL YEAR 2024-2025 OPERATING AND CAPITAL IMPROVEMENT BUDGET APPROPRIATIONS TO CONTINUE THROUGH FISCAL YEAR 2025-2026 UNTIL AUGUST 31,2025, OR UNTIL THE ADOPTION OF THE FISCAL YEAR 2025-2026 OPERATING AND CAPITAL IMPROVEMENT PROGRAM BUDGET

Recommendation
It is recommended that the City Council discuss and consider approval of the proposed resolution authorizing the Fiscal Year 2024-2025 Operating and Capital Improvement Program Budget appropriations to continue for Fiscal Year 2025-26 until August 31, 2025 or until the adoption of the Fiscal Year 2025-26 Operating and Capital Improvement Program Budget are approved, whichever comes first.

William Castrillon, Budget and Purchasing Manager, gave a presentation and responded to questions from the City Council.

In Person Public Comments

Josh B. spoke regarding the item.

COUNCIL MOTION AND ACTION

A motion was made by Councilmember Cacciotti and seconded by Councilmember Ferguson to approve Item No. 19, as presented. The motion carried 5-0, by the following vote:

AYES: Cacciotti, Ferguson, Primuth, Rossi, Mayor Braun
NOES: None.
ABSENT: None.
ABSTAINED: None.

Resolution No. 7910 was adopted.

20. CONSIDER AUTHORIZATION OF OVERTIME FOR ELIGIBLE EMPLOYEES IN THE PUBLIC SERVICE EMPLOYEES ASSOCIATION AND PART-TIME PUBLIC SERVICE EMPLOYEES ASSSOCIATION FOR WORKING THE 2025 4TH OF JULY HOLIDAY

Recommendation
Consider authorizing overtime compensation for eligible employees in Public Service Employees Association (PSEA) and eligible employees in the Part -Time Public Employees Association (PT-PSEA) working on the 2025 4th of July holiday.

Lucy Hakobian, Community Services Director, gave a presentation and responded to questions from the City Council.

Zoom Public Comment
Steven L. spoke regarding the item.

COUNCIL MOTION AND ACTION

A motion was made by Councilmember Cacciotti and seconded by Mayor Pro Tem Rossi to approve Item No. 20, as presented. The motion carried 5-0, by the following vote:

AYES: Cacciotti, Ferguson, Primuth, Rossi, Mayor Braun
NOES: None.
ABSENT: None.
ABSTAINED: None.

21. CONSIDER INTRODUCTION OF AN ORDINANCE OF THE CITY OF SOUTH PASADENA AMENDING ARTICLE IVH (CULTURAL HERITAGE COMMISSION) OF CHAPTER 2 OF THE SOUTH PASADENA MUNICIPAL CODE TO REQUIRE A

POSTED ON-SITE NOTICE FOR HEARINGS; EXTENDING THE EXPIRATION DATE FOR CERTIFICATES OF APPROPRIATENESS FROM 18 TO 24 MONTHS; INCREASING MINOR PROJECT REVIEW THRESHOLDS FOR CHAIR REVIEW; AND UPDATING LANGUAGE FOR CONSISTENCY AND CLARIFICATION

Recommendation

It is recommended that the City Council introduce the ordinance by title only and waive full reading of the ordinance amending Article IVH (Cultural Heritage Commission of Chapter 2 (Administration) of the South Pasadena Municipal Code to make administrative processing improvements for certificates of appropriateness, increase public noticing and remove language inconsistencies.

Dean Flores, Acting Planning Manager, gave a presentation and responded to questions from the City Council.

COUNCIL MOTION AND ACTION

A motion was made by Mayor Pro Tem Rossi and seconded by Councilmember Ferguson to approve Item No. 21, as presented. The motion carried 5-0, by the following vote:

AYES:	Cacciotti, Ferguson, Primuth, Rossi, Mayor Braun
NOES:	None.
ABSENT:	None.
ABSTAINED:	None.

22. CONSIDERATION OF APPROVAL OF PROPOSED ELECTRIC VEHICLE CHARGING RATES AT CITY OWNED FACILITIES AND APPROVAL OF PARTICIPATION IN THE LOW CARBON FUEL STANDARD PROGRAM AND APPROVE AN AGREEMENT WITH FUSE IN THE FINAL FORM APPROVED BY THE CITY ATTORNEY AND CITY MANAGER

Recommendation

It is recommended that the City Council:

1. Adopt electric vehicle charging rates for City-owned, publicly accessible EV chargers at City Hall; and
2. Approve the City's participation in the Low Carbon Fuel Standard (LCFS) California State regulatory program and approve an agreement with FuSE in the final form negotiated and approved by the City Attorney and City Manager to facilitate the City's participation in the LCFS program.

Ted Gerber, Public Works Director, gave a presentation and responded to questions from the City Council.

COUNCIL MOTION AND ACTION

A motion was made by Councilmember Ferguson and seconded by Councilmember Cacciotti to approve Item No. 22, as presented. The motion carried 5-0, by the following vote:

AYES:	Cacciotti, Ferguson, Primuth, Rossi, Mayor Braun
NOES:	None.
ABSENT:	None.
ABSTAINED:	None.

PUBLIC COMMENT – CONTINUED

23. CONTINUED PUBLIC COMMENT - GENERAL

None.

COMMUNICATIONS

24. COUNCILMEMBERS COMMUNICATIONS

Councilmember Cacciotti thanked Public Works Director Ted Gerber for his service.

25. CITY MANAGER COMMUNICATIONS

None.

ADJOURNMENT

There being no further matters, Mayor Braun adjourned the meeting at 11:25 P.M. to Wednesday, June 18, 2025 at 7:00 P.M. in the City Council Chambers.

Respectfully submitted:

_____

Hector Gomez
Chief City Clerk

APPROVED

_____

Janet Braun
Mayor

ATTEST:

_____
Hector Gomez
Chief City Clerk

CITY OF SOUTH PASADENA
CITY COUNCIL AND FINANCE COMMISSION
SPECIAL JOINT MEETING

M I N U T E S
WEDNESDAY, JUNE 4, 2025, AT 7:01 P.M.

CALL TO ORDER:

The Special Joint Meeting of the South Pasadena City Council and Finance Commission was called to order by Mayor Braun on Wednesday, June 4, 2025, at 7:08 P.M. The City Council Chambers are located at 1424 Mission Street, South Pasadena, California.

ROLL CALL:

PRESENT	Mayor	Janet Braun
	Mayor Pro Tem	Sheila Rossi
	Councilmember	Michael A. Cacciotti
	Councilmember	Jon Primuth
	Councilmember	Omari Ferguson
	Chair	Peter Giulioni Jr.
	Vice Chair	Cynthia Quade
	Commissioner	Nevin Stanton-Trehan
	Commissioner	Y-Le Ho
	Commissioner	Renee Rubin
ABSENT	None.	

Mark Perez, Deputy City Clerk, announced a quorum.

CITY STAFF PRESENT:

Todd Hileman, City Manager; Roxanne Diaz, City Attorney; Mark Perez, Deputy City Clerk; were present at Roll Call. Other staff members presented reports or responded to questions as indicated in the minutes.

PUBLIC COMMENT

1. PUBLIC COMMENT

In-Person Comments:
Josh Betta spoke regarding Item No. 2 and 3.

PRESENTATIONS

2. CONSIDERATION, REVIEW, DISCUSSION, AND COUNCIL DIRECTION ON THE FISCAL YEARS 2025-2026 TO 2029-2030 PROPOSED CAPITAL IMPROVEMENT PROGRAM (CIP)

Recommendation
It is recommended that the City Council consider, review and discuss the Fiscal Years 2025-2026 to 2029-2030 Proposed Capital Improvement Program.

Will Castrillon, Budget and Purchasing Manager; Todd Hilman, City Manager; and Ted Gerber, Public Works Director, gave a presentation on the proposed Capital Improvement Program and responded to questions from the City Council.

Discussion was held regarding the item. No motion was made on the item. (i.e. no action taken).

3. CONSIDERATION OF ADOPTION OF A NEW FUND BALANCE POLICY

Recommendation
It is recommended that the City Council and Finance Committee review and consider implementing a new Fund Balance Policy for the General Fund.

Kelly Telford, LSL, gave a presentation and responded to questions from the City Council.

Discussion was held regarding the item. No motion was made on the item. (i.e. no action taken).

ADJOURNMENT

There being no further matters, Mayor Braun adjourned the meeting of the City Council and Finance Commission at 10:07 P.M.

Respectfully submitted:

_____
Hector Gomez
Chief City Clerk

APPROVED:

_____
Janet Braun
Mayor

ATTEST:

_____
Hector Gomez
Chief City Clerk

City Council Agenda Report

ITEM NO. 8

DATE: June 18, 2025

FROM: Todd Hileman, City Manager

PREPARED BY: Michael Vartanians, Principal Engineer

SUBJECT: **CONSIDER THE APPROVAL OF A TASK ORDER WITH NV5 FOR PROJECT, CONSTRUCTION AND INSPECTION MANAGEMENT SERVICES FOR THE FISCAL YEAR 2024-2025 RESIDENTIAL SLURRY SEAL PROJECT**

Recommendation

It is recommended that the City Council approve the Task Order under an existing Master On-Call Professional Services Agreement with NV5,in the final form approved by the City Attorney, to provide project management, construction management, and inspection management services for the City's Fiscal Year 2024-2025 Residential Slurry Seal Project (Project) in the not-to-exceed amount of $119,010.

Executive Summary

The City's Fiscal Year (FY) 2025-2026 Capital Improvement Program (CIP) includes the construction of streets in various locations in the City as part of the FY24-25 Residential Slurry Seal Project. This item proposes the approval of a task order with NV5 for professional services to manage construction and inspection of the Project.

Background

The City's Public Works Department is responsible for developing and implementing the City's Capital Improvement Program (CIP), including improvement and maintenance of the City's roadway infrastructure. City Council recently awarded a slurry seal improvement construction contract, and project, construction, and inspection management professional services are needed to implement the improvements.

Analysis

On July 27, 2022, the City Council authorized the approval of multiple Master Service Agreements with professional services consultants for Public Works related on-call assignments. NV5 is one of the consultants approved by the City Council, having submitted a proposal to provide construction management and inspection services. NV5 is well qualified to complete the scope of work required. NV5's scope of work, under this task order, includes providing project, construction, and inspection management professional services utilizing two dedicated staff, a Construction Inspector and a Construction Manager.

The Master Service Agreements for each on-call consultant includes 'Task Order' exhibits that are executed based on the specific scope for each specific task or project. To ensure that use of these on-call professional services follows City Council's adopted procurement policy, Task

Orders above the City Manager's spending authority, such as this item's proposed work, are brought to Council for approval.

Fiscal Impact
Funding for this task order will be available in the Fiscal Year 2025-2026 Budget under the Streets & Sidewalk Street Repavement & Repairs CIP Project, with $120,000 appropriated to CIP Account No. 400-9000-9008-9203-000. This account includes a $60,000 transfer from the Fund 233 Measure R Local Return Account, a $60,000 transfer from Fund 236 Measure M Local Return Account.

Key Performance Indicators and Strategic Plan
This item is related to the street improvement goals in the City Council's 2025 compilation of priorities, number 2(a).

Commission Review and Recommendation
These proposed street improvements have been discussed at multiple meetings of the Mobility and Infrastructure Transportation Commission, Public Works Commission and the Public Works Infrastructure Commission throughout the development of the Project.

Public Notification
The public was made aware that this item was to be considered this evening by virtue of its inclusion on the legally publicly noticed agenda, posting of the same agenda and reports on the City's website.

Environmental Analysis
At the April 16, 2025, City Council meeting, during which construction of this Project was awarded to a contractor, the Project was found to be categorically exempt from CEQA pursuant to Section 21084 of the Public Resources Code, in accordance with Article 19, Section 15301, Class (1) "existing facilities."

Attachment:
Attachment No. 1 - Proposed Task Order
Attachment No. 2 - Master On-Call Professional Services Agreement

TASK ORDER NO. [NV5R9266-003]

TO MASTER PROFESSIONAL SERVICES AGREEMENT (2024-206)

This Task Order No. **[NV5R9266-003]** ("Task Order") is made and entered into by and between the City of South Pasadena, a municipal corporation ("City"), and [NV5] ("Consultant").

RECITAL

A. City and Consultant entered into an agreement entitled Master On-Call Professional Services Agreement ("Agreement") dated **December 4, 2024** by which the Consultant agreed to perform **Construction Management Services and Inspection Services** in accordance with Task Orders issued by the City.

NOW, THEREFORE, THE PARTIES HEREBY AGREE AS FOLLOWS:

1. **INCORPORATION BY REFERENCE.** This Task Order hereby incorporates by reference all terms and conditions set forth in the Agreement.

2. **SCOPE OF TASK ORDER.** Consultant shall perform the following services in accordance with the terms and conditions of the Agreement:

FY 24-25 Residential Slurry Seal Project, Construction, and Inspection Management
Provide project management, construction management, and inspection management services for the City's FY 24-25 Residential Slurry Seal Project. The work for which Consultant shall provide these services consists of traffic control, asphalt concrete removal and replacing, crack sealing, slurry sealing, roadway restriping and applying new pavement stencils, and all appurtenant work thereto necessary for the proper construction of the contemplated improvements, in accordance to Plans and Specifications.

Task 1 – Construction Management Duties:

a. Provide project management services under the direction of the City's Director of Public Works/City Engineer. Provide services from a construction manager, including construction of streets and related components.

b. Provide complete construction management, construction administration, inspection services and labor compliance for Street Improvement Projects, including but not limited to project scheduling, project controls, project management, collaboration and claims resolution, daily reports and capturing photos, Contractor's labor force compliance monitoring, inspection/monitoring of traffic control procedures and traffic control plan, conducting progress meetings and preparing meeting minutes, coordinating with agencies and stakeholders, monitoring the project schedule, verifying quantities, and assuring quality control, and site safety.

c. Maintain complete and accurate project records, including monthly progress pay estimates, daily construction reports, extra work reports, contract change orders, labor

and equipment records, correspondence, personnel records, records verifying stormwater pollution prevention plan (SWPPP) compliance, processing submittals of requests for information (RFIs), weekly statement of working days, change orders, punch-lists, and as-builts.

d. Maintain compliance of project records in compliance with the Standard Specifications for Public Works, City standards and construction documents, safety-related activities, implementing security procedures, coordinating survey and materials testing, as well as processing control documents, submittals, RFIs, weekly statement of working days, change orders, work change directives, and compliance with NPDES and encroachment permit requirements, if required.

e. Attend pre-construction meetings, project progress meetings, and provide assistance in responding to all questions in timely manner. Assist City in conducting and coordinating field meetings with contractors and act as the City's liaison for coordination and communication with other agencies, engineers, architects, and community members as needed. Coordinate with design engineers and project managers on design issues encountered during construction.

f. Review contractor's submittals in accordance with the requirements of project specifications and the City's requirements prior to final approval. Review, negotiate, process and monitor contract change orders with the City's approval. Review extra work invoices. Review and respond to RFIs in a timely manner.

g. Develop solutions to problems identified in the field with City approval.

h. Maintain all records and meet reporting requirements.

i. Provide community outreach and public outreach services as required. Identify and issue notice to contractor of safety concerns and violations.

j. Provide project status and overall condition of construction projects, including cost, budget, and schedule.

k. Review and approve punch lists. Participate and assist in conducting final inspection, testing and release of facilities. Review and approve record drawings at project completion.

l. Assist in preparation of daily pay estimates in accordance with the inspection daily report, and assist in preparation of contractors monthly pay estimates.

m. Report all unresolved issues and potential claims to the City's representative in writing on a daily basis.

n. Provide inspection services, including construction inspection of streets and related

components.

o. Review plans and specifications, and provide construction inspection / observations. Observe construction of improvements by contractors and make recommendations regarding completion and acceptance of the work. Provide construction observations associated with work performed by contractors on City parks, and related areas to ensure compliance with approved plans, specifications, permits, and City guidelines and standards.

p. Ensure that materials and completed work comply with plans, specifications, and design criteria.

q. Inspect improvements for compliance with approved plans.

r. Prepare general correspondence and daily construction inspection reports, and coordinate with developers, engineers, staff, and the public.

3. **TASK ORDER ADMINISTRATOR.** Consultant shall designate a principal point of contact for this task order:

Luanne Bean, P.E.
Director of Program and Construction Management
NV5
163 Technology Drive, Suite 100
Irvine, CA 92618
Office Telephone: (949) 585-0477
Mobile Telephone: (951) 377-1566
Email: Luanne.Bean@nv5.com

4. **SCHEDULE.** Consultant shall complete the Task Order by the date listed below, or, if specified, in accordance with the required schedule of milestones listed below:

All scope items listed in this task order shall be completed as directed by the City Public Works Director.

5. **PAYMENT.** For services performed by Consultant in accordance with this Task Order, City will compensate Consultant in accordance with the terms and conditions of the Agreement based on the Fee Schedule set forth below. The total cost of this project is to be no more than **One-Hundred and Nineteen Thousand and Ten Dollars ($119,010)**, based on the rates in the Fee Schedule set forth below. Payments shall be made on an hourly basis, and shall be invoiced by the Consultant upon approval by the City, in accordance with the below costs.

Invoices shall be submitted electronically to PWAP@southpasadenaca.gov

Table 1: NV5 Tasks and Assigned Personnel with Hourly Rates ($ / hr)			
Task	**Sr. Construction Manager** **$ 185 / hr**	**Construction Inspector** **$ 159 / hr**	**Task Fee**
1	162 hrs $29,970	560 hrs $89,040	722 hours $119,010
Total	162 hours $29,970	560 hours $89,040	722 hours $119,010

6. **SIGNATURES.** The individuals executing this Task Order represent and warrant that they have the right, power, legal capacity, and authority to enter into and to execute this Task Order on behalf of the respective legal entities of the Consultant and the City.

IN WITNESS WHEREOF, the City and Consultant do hereby agree to the full performance of the terms set forth herein.

"City"	"Consultant"
City of South Pasadena	**NV5**
By:_____	By:_____
Signature	*Signature*
Printed:_____	Printed:_____
Title:_____	Title:_____
Date:_____	Date:_____

Attest:

By:_____
Hector Gomez, Chief City Clerk

Date:_____

Approved as to form:

By:_____
Roxanne Diaz, City Attorney

Date:_____

MASTER ON-CALL PROFESSIONAL SERVICES AGREEMENT FOR CONSULTANT SERVICES

(City of South Pasadena /NV5, Inc.)

1. IDENTIFICATION

This PROFESSIONAL SERVICES AGREEMENT ("Agreement") is entered into by and between the City of South Pasadena, a California municipal corporation ("City"), and **NV5, Inc.** ("Consultant").

2. RECITALS

2.1. City has determined that it requires the following professional services from a consultant:

- **Civil Design Engineering Services**
- **Structural Design Engineering Services**
- **Facility Design Engineering Services**
- **Public Works and Development Land Use, Subdivision Control, Map and Plan Check Services**
- **Traffic/Transportation Engineering Services**
- **Geographic Information Systems (GIS) Support Services**
- **Computer Aided Drafting (CAD) Design Services**
- **Surveying Services**
- **Environmental Consulting and Document Services**
- **Environmental Monitoring Services**
- **Sustainability, Electrical, Solar, and Energy Design and Assessment Services**
- **Construction Management Services**
- **Inspection Services**
- **Seismic and Structural Examination Services**
- **Material Testing and Geotechnical Engineering Services**
- **Stormwater, Flood Plain, and Hydrogeological Engineering Services**
- **Building and Facility Assessment Services**
- **Assessment District Services**

2.2. Consultant represents that it is fully qualified to perform such professional services by virtue of its experience and the training, education and expertise of its principals and employees. Consultant further represents that it is willing to accept responsibility for performing such services in accordance with the terms and conditions set forth in this Agreement.

2.3. Consultant represents that it has no known relationships with third parties, City Council members, or employees of City which would (1) present a conflict of interest with the rendering of services under this Agreement under Government Code Section 1090, the Political Reform Act (Government Code Section 81000 *et seq.*), or other applicable

law, (2) prevent Consultant from performing the terms of this Agreement, or (3) present a significant opportunity for the disclosure of confidential information.

NOW, THEREFORE, for and in consideration of the mutual covenants and conditions herein contained, City and Consultant agree as follows:

3. DEFINITIONS

3.1. "Scope of Services": Such professional services as are set forth in Exhibit A. Specific scope of work for specific project assignments shall be identified through executed Task Orders, which shall incorporate by reference the terms of this Master Agreement.

3.2. "Agreement Administrator": The Agreement Administrator for this project is **H. Ted Gerber, Public Works Director**. The Agreement Administrator shall be the principal point of contact at the City for this project. All services under this Agreement shall be performed at the request of the Agreement Administrator. The Agreement Administrator will establish the timetable for completion of services and any interim milestones. City reserves the right to change this designation upon written notice to Consultant

3.3. "Approved Fee Schedule": Consultant's compensation rates are set forth in the fee schedule attached hereto as Exhibit B and incorporated herein by this reference. This fee schedule shall remain in effect for the duration of this Agreement unless modified in writing by mutual agreement of the parties.

3.4. "Design Professional": A Design Professional is any individual satisfying one or more of the following: (1) licensed as an architect pursuant to Business and Professions Code 5500 et seq., (2) licensed as a landscape architect pursuant to Business and Professions Code 5615 et seq., (3) licensed as a professional land surveyor pursuant to Business and Professions Code 8700 et seq., or (4) registered as a professional engineer pursuant to Business and Professions Code 6700 et seq.

3.5. "Commencement Date": **December 4, 2024**.

3.6. "Termination Date": **June 30, 2025**.

4. TERM

The term of this Agreement shall commence at 12:00 a.m. on the Commencement Date and shall expire at 11:59 p.m. on the Termination Date unless extended by written agreement of the parties or terminated earlier under Section 18 ("Termination") below. Consultant may request extensions of time to perform the services required hereunder. Such extensions shall be effective if authorized in advance by City in writing and incorporated in written amendments to this Agreement.

5. IDENTIFICATION OF PROJECTS

5.1. When City determines a need exists for any of the services specified in Exhibit A to this Agreement, City and Consultant may execute a "Task Order" detailing the specific services needed, the applicable fees therefor in accordance with Exhibit B to this Agreement, and the time for completion of such services by Consultant. Each Task Order shall incorporate by reference the terms of this Agreement and shall be sequentially-identified. Consultant shall only perform services under this Agreement and be paid for work performed pursuant to a Task Order approved and executed by the City.

6. CONSULTANT'S DUTIES

6.1. **Services**. Consultant shall perform the services identified in the Task Order. City shall have the right to request, in writing, changes to the Task Order. Any such changes mutually agreed upon by the parties, and any corresponding increase or decrease in compensation, shall be incorporated by written amendment to the Task Order or this Agreement.

6.2. **Coordination with City**. In performing services under this Agreement, Consultant shall coordinate all contact with City through its Agreement Administrator.

6.3. **Budgetary Notification**. Consultant shall notify the Agreement Administrator, in writing, when fees and expenses incurred under this Agreement have reached eighty percent (80%) of the Maximum Amount. Consultant shall concurrently inform the Agreement Administrator, in writing, of Consultant's estimate of total expenditures required to complete its current assignments before proceeding, when the remaining work on such assignments would exceed the Maximum Amount.

6.4. **Business License.** Consultant shall obtain and maintain in force a City business license for the duration of this Agreement.

6.5. **Professional Standards.** Consultant shall perform all work to the standards of Consultant's profession and in a manner reasonably satisfactory to City. Consultant shall keep itself fully informed of and in compliance with all local, state, and federal laws, rules, and regulations in any manner affecting the performance of this Agreement, including all Cal/OSHA requirements, the conflict of interest provisions of Government Code § 1090 and the Political Reform Act (Government Code § 81000 et seq.).

6.6. **Avoid Conflicts.** During the term of this Agreement, Consultant shall not perform any work for another person or entity for whom Consultant was not working at the Commencement Date if such work would present a conflict interfering with performance under this Agreement. However, City may consent in writing to Consultant's performance of such work.

6.7. **Appropriate Personnel.** Consultant has, or will secure at its own expense, all personnel required to perform the services identified in the Task Order. All such services shall be performed by Consultant or under its supervision, and all personnel engaged in the work shall be qualified to perform such services. **David Niknafs** shall be Consultant's project administrator and shall have direct responsibility for management of Consultant's performance under this Agreement. No change shall be made in Consultant's project administrator without City's prior written consent.

6.8. **Substitution of Personnel.** Any persons named in the proposal or Task Order constitutes a promise to the City that those persons will perform and coordinate their respective services under this Agreement. Should one or more of such personnel become unavailable, Consultant may substitute other personnel of at least equal competence upon written approval of City. If City and Consultant cannot agree as to the substitution of key personnel, City may terminate this Agreement for cause.

6.9. **Unauthorized Delay.** Consultant shall complete all services associated with the Task Order within the time period specified therein, or within seven (7) work days after execution thereof if no time is specified, as directed by the Agreement Administrator.

6.10. **Unforeseeable Delay.** Consultant shall not be deemed in breach of this Agreement or any Task Order, and no forfeiture due to delay shall be made, because of any delays in the completion of a Task Order due to unforeseeable causes beyond the control and without the fault or negligence of Consultant provided Consultant requests from the Agreement Administrator an extension of time in writing. Unforeseeable causes of delay beyond the control of Consultant shall include acts of God, acts of a public enemy, acts of the government, acts of City, or acts of another consultant or contractor in the performance of a contract with City, fires, floods, epidemics, quarantine restrictions, strikes, freight embargoes, and weather, or delays of sub-consultants due to such causes, or delays caused by failure of the owner of a utility to provide for removal or relocation of existing utility facilities. Delays caused by actions or negligence of Consultant or its agents, servants, employees, officers, sub-consultants, directors, or of any party contracting to perform part of all of the Scope of Services or to supply any equipment or materials shall not be unforeseeable delays. Unforeseeable delays (those beyond Consultant's control) shall not entitle Consultant to any additional compensation beyond the Maximum Amount. The sole recourse of Consultant shall be to seek an extension of time from the Agreement Administrator.

6.11. **Defective Work.** All work which is defective in its construction or deficient in any of the requirements set by City Reference Specifications shall be remedied or replaced by Consultant in an acceptable manner at its own expense. Defective work shall not entitle Consultant to any additional compensation beyond the Maximum Amount.

6.12. **Permits and Approvals.** Consultant shall obtain, at its sole cost and expense, all permits and regulatory approvals necessary for Consultant's performance of this Agreement. This includes, but shall not be limited to, professional licenses, encroachment permits and building and safety permits and inspections.

6.13. **Notification of Organizational Changes.** Consultant shall notify the Agreement Administrator, in writing, of any change in name, ownership or control of Consultant's firm or of any sub-consultant. Change of ownership or control of Consultant's firm may require an amendment to this Agreement.

6.14. **Records.** Consultant shall maintain any and all ledgers, books of account, invoices, vouchers, canceled checks, and other records or documents evidencing or relating to charges for services or expenditures and disbursements charged to City under this Agreement for a minimum of three (3) years, or for any longer period required by law, from the date of final payment to Consultant under this Agreement. All such documents shall be made available for inspection, audit, and/or copying at any time during regular business hours, upon oral or written request of City. In addition, pursuant to Government Code Section 8546.7, if the amount of public funds expended under this Agreement exceeds ten thousand dollars, all such documents and this Agreement shall be -ject to the examination and audit of the State Auditor, at the request of City or as part of any audit of City, for a period of three (3) years after final payment under this Agreement.

7. SUBCONTRACTING

7.1. **General Prohibition.** This Agreement covers professional services of a specific and unique nature. Except as otherwise provided herein, Consultant shall not assign or transfer its interest in this Agreement or subcontract any services to be performed without amending this Agreement.

7.2. **Consultant Responsible.** Consultant shall be responsible to City for all services to be performed under this Agreement.

7.3. **Subcontracting.** Consultant shall not subcontract any portion of the performance contemplated and provided for herein including any Task Order unless (1) such subcontracting is specifically described in the proposal attached hereto or (2) the City provides prior written approval. In any event, Consultant shall supervise all work subcontracted by Consultant in performing the Services and shall be responsible for all work performed by a sub-consultant as if Consultant itself had performed such work. The subcontracting of any work shall not relieve Consultant from any of its obligations under this Agreement with respect to any Task Order. Consultant is obligated to ensure that any and all sub-consultants performing any services shall be fully insured in all respects and to the same extent as set forth under Section 13, to City's satisfaction.

7.4. **Identification in Fee Schedule.** All sub-consultants shall be specifically listed and their billing rates identified in the Approved Fee Schedule, Exhibit B. Any changes must be approved by the Agreement Administrator in writing as an amendment to this Agreement.

7.5. **Compensation for Sub-consultants.** City shall pay Consultant for work performed by its sub-consultants, if any, only at Consultant's actual cost plus an approved mark-up as set forth in the Approved Fee Schedule, Exhibit B. Consultant shall be liable and accountable for any and all payments, compensation, and federal and state taxes to all sub-consultants performing services under this Agreement. City shall not be liable for any payment, compensation, or federal and state taxes for any sub-consultants.

8. COMPENSATION

8.1. **General.** City agrees to compensate Consultant for the services provided under this Agreement, and Consultant agrees to accept payment in accordance with the Fee Schedule in full satisfaction for such services. Compensation shall not exceed the Maximum Amount stated in the specific Task Order issued for performance of work. Consultant shall not be reimbursed for any expenses unless provided for in this Agreement or authorized in writing in the Task Order. Task Orders over $25,000 shall not be effective unless approved by the City Council.

8.2. **Invoices.** Consultant shall submit to City an invoice, on a monthly basis or as otherwise agreed to by the Agreement Administrator, for services performed pursuant to this Agreement. Each invoice shall identify the Maximum Amount, the services rendered during the billing period, the amount due for the invoice, and the total amount previously invoiced. All labor charges shall be itemized by employee name and classification/position with the firm, the corresponding hourly rate, the hours worked, a description of each labor charge, and the total amount due for labor charges.

8.3. **Taxes.** City shall not withhold applicable taxes or other payroll deductions from payments made to Consultant except as otherwise required by law. Consultant shall be solely responsible for calculating, withholding, and paying all taxes.

8.4. **Disputes.** The parties agree to meet and confer at mutually agreeable times to resolve any disputed amounts contained in an invoice submitted by Consultant.

8.5. **Additional Work.** Consultant shall not be reimbursed for any expenses incurred for work performed outside the Task Order unless prior written approval is given by the City on a time-and-materials basis pursuant to a new or amended Task Order. Consultant shall not undertake any such work without prior written approval of the City. A new or amended Task Order shall be in accordance with the fees identified in Exhibit B to this Agreement.

8.6. **City Satisfaction as Precondition to Payment.** Notwithstanding any other terms of this Agreement, no payments shall be made to Consultant until City is satisfied that the services are satisfactory.

8.7. **Right to Withhold Payments.** If Consultant fails to provide a deposit or promptly satisfy an indemnity obligation described in Section 11, City shall have the right to withhold payments under this Agreement to offset that amount.

9. PREVAILING WAGES

Consultant is aware of the requirements of California Labor Code Section 1720, et seq., and 1770, et seq., as well as California Code of Regulations, Title 8, Section 16000, et seq., ("Prevailing Wage Laws"), which require the payment of prevailing wage rates and the performance of other requirements on certain "public works" and "maintenance" projects. Consultant shall defend, indemnify, and hold the City, tis elected officials, officers, employees, and agents free and harmless form any claim or liability arising out of any failure or alleged failure of Consultant to comply with the Prevailing Wage Laws.

10. OWNERSHIP OF WRITTEN PRODUCTS

All reports, documents or other written material, and all electronic files, including computer-aided design files, developed by Consultant in the performance of this Agreement (such written material and electronic files are collectively known as "written products") shall be and remain the property of City without restriction or limitation upon its use or dissemination by City except as provided by law. Consultant may take and retain copies of such written products as desired, but no such written products shall be the subject of a copyright application by Consultant.

11. RELATIONSHIP OF PARTIES

11.1. **General.** Consultant is, and shall at all times remain as to City, a wholly independent contractor.

11.2. **No Agent Authority.** Consultant shall have no power to incur any debt, obligation, or liability on behalf of City or otherwise to act on behalf of City as an agent. Neither City nor any of its agents shall have control over the conduct of Consultant or any of Consultant's employees, except as set forth in this Agreement. Consultant shall not represent that it is, or that any of its agents or employees are, in any manner employees of City.

11.3. **Independent Contractor Status.** Under no circumstances shall Consultant or its employees look to the City as an employer. Consultant shall not be entitled to any benefits. City makes no representation as to the effect of this independent contractor relationship on Consultant's previously earned California Public Employees Retirement System ("CalPERS") retirement benefits, if any, and Consultant specifically assumes the responsibility for making such a determination. Consultant shall be responsible for all reports and obligations including, but not limited to: social security taxes, income tax withholding, unemployment insurance, disability insurance, and workers' compensation, and other applicable federal and state taxes.

11.4. **Indemnification of CalPERS Determination.** In the event that Consultant or any employee, agent, or subcontractor of Consultant providing services under this Agreement claims or is determined by a court of competent jurisdiction or CalPERS to

be eligible for enrollment in CalPERS as an employee of the City, Consultant shall indemnify, defend, and hold harmless City for the payment of any employee and/or employer contributions for CalPERS benefits on behalf of Consultant or its employees, agents, or subcontractor, as well as for the payment of any penalties and interest on such contributions, which would otherwise be the responsibility of City.

12. INDEMNIFICATION

12.1. **Definitions.** For purposes of this Section 11, "Consultant" shall include Consultant, its officers, employees, servants, agents, or sub-consultants, or anyone directly or indirectly employed by either Consultant or its sub-consultants, in the performance of this Agreement. "City" shall include City, its officers, agents, employees and volunteers.

12.2. **Consultant to Indemnify City.** To the fullest extent permitted by law, Consultant shall indemnify, hold harmless, and defend City from and against any and all claims, losses, costs or expenses for any personal injury or property damage arising out of or in connection with Consultant's alleged negligence, recklessness or willful misconduct or other wrongful acts, errors or omissions of Consultant or failure to comply with any provision in this Agreement.

12.3. **Scope of Indemnity.** Personal injury shall include injury or damage due to death or injury to any person, whether physical, emotional, consequential or otherwise, Property damage shall include injury to any personal or real property. Consultant shall not be required to indemnify City for such loss or damage as is caused by the sole active negligence or willful misconduct of the City.

12.4. **Attorneys Fees.** Such costs and expenses shall include reasonable attorneys' fees for counsel of City's choice, expert fees and all other costs and fees of litigation. Consultant shall not be entitled to any refund of attorneys' fees, defense costs or expenses in the event that it is adjudicated to have been non-negligent.

12.5. **Defense Deposit.** The City may request a deposit for defense costs from Consultant with respect to a claim. If the City requests a defense deposit, Consultant shall provide it within 15 days of the request.

12.6. **Waiver of Statutory Immunity.** The obligations of Consultant under this Section 11 are not limited by the provisions of any workers' compensation act or similar act. Consultant expressly waives its statutory immunity under such statutes or laws as to City.

12.7. **Indemnification by Subcontractors.** Consultant agrees to obtain executed indemnity agreements with provisions identical to those set forth here in this Section 11 from each and every subcontractor or any other person or entity involved in the performance of this Agreement on Consultant's behalf.

12.8. **Insurance Not a Substitute.** City does not waive any indemnity rights by accepting any insurance policy or certificate required pursuant to this Agreement. Consultant's indemnification obligations apply regardless of whether or not any insurance policies are determined to be applicable to the claim, demand, damage, liability, loss, cost or expense.

12.9. **Civil Code.** For Design Professionals, the parties are aware of the provisions of Civil Code 2782.8 relating to the indemnification and the duty and the cost to defend a public agency by a Design Professional and agree that this Section 12 complies therewith.

13. INSURANCE

13.1. **Insurance Required.** Consultant shall maintain insurance as described in this section and shall require all of its subcontractors, sub-consultants, and other agents to do the same. Approval of the insurance by the City shall not relieve or decrease any liability of Consultant Any requirement for insurance to be maintained after completion of the work shall survive this Agreement.

13.2. **Documentation of Insurance.** City will not execute this agreement until it has received a complete set of all required documentation of insurance coverage. However, failure to obtain the required documents prior to the work beginning shall not waive the Consultant's obligation to provide them. Consultant shall file with City:

- Certificate of Insurance, indicating companies acceptable to City, with a Best's Rating of no less than A:VII showing. The Certificate of Insurance must include reference to the scope of work and this Master Agreement.
- Documentation of Best's rating acceptable to the City.
- Original endorsements effecting coverage for all policies required by this Agreement.
- City reserves the right to obtain a full certified copy of any Insurance policy and endorsements. Failure to exercise this right shall not constitute a waiver of the right to exercise later.

13.3. **Coverage Amounts.** Insurance coverage shall be at least in the following minimum amounts:

• Professional Liability Insurance:	$2,000,000 per occurrence, $2,000,000 aggregate
• General Liability:	
• General Aggregate:	$2,000,000
• Products Comp/Op Aggregate	$2,000,000
• Personal & Advertising Injury	$2,000,000
• Each Occurrence	$2,000,000
• Fire Damage (any one fire)	$ 100,000
• Medical Expense (any 1 person)	$ 10,000

- Workers' Compensation:
  - Workers' Compensation — Statutory Limits
  - EL Each Accident — $1,000,000
  - EL Disease - Policy Limit — $1,000,000
  - EL Disease - Each Employee — $1,000,000

- Automobile Liability
  - Any vehicle, combined single limit — $1,000,000

Any available insurance proceeds broader than or in excess of the specified minimum insurance coverage requirements or limits shall be available to the City as additional insured. Furthermore, the requirements for coverage and limits shall be the greater of (1) the minimum coverage and limits specified in this Agreement, or (2) the broader coverage and maximum limits of coverage of any insurance policy or proceeds available to the named insured.

13.4. **General Liability Insurance.** Commercial General Liability Insurance shall be no less broad than ISO form CG 00 01. Coverage must be on a standard Occurrence form. Claims-Made, modified, limited or restricted Occurrence forms are not acceptable.

13.5. **Worker's Compensation Insurance.** Consultant is aware of the provisions of Section 3700 of the Labor Code which requires every employer to carry Workers' Compensation (or to undertake equivalent self-insurance), and Consultant will comply with such provisions before commencing the performance of the work of this Agreement. If such insurance is underwritten by any agency other than the State Compensation Fund, such agency shall be a company authorized to do business in the State of California.

13.6. **Automobile Liability Insurance.** Covered vehicles shall include owned if any, non-owned, and hired automobiles and, trucks.

13.7. P**rofessional Liability Insurance or Errors & Omissions Coverage.** If the Consultant is performing any surveying, engineering, architectural, or other design work for the project, Consultant shall provide proof of Professional Liability insurance in the amounts described above. The deductible or self-insured retention may not exceed $50,000, unless written approval is granted by the City for another amount. If the insurance is on a Claims-Made basis, the retroactive date shall be no later than the commencement of the work. Coverage shall be continued for two years after the completion of the work by one of the following: (1) renewal of the existing policy; (2) an extended reporting period endorsement; or (3) replacement insurance with a retroactive date no later than the commencement of the work under this Agreement.

13.8. **Claims-Made Policies.** If any of the required policies provide coverage on a claims-made basis the Retroactive Date must be shown and must be before the date of the contract or the beginning of contract work. Claims-Made Insurance must be maintained and evidence of insurance must be provided for at least five (5) years after completion

of the contract of work. If coverage is canceled or non-renewed, and not replaced with another claims-made policy form with a Retroactive Date prior to the contract effective date, the Consultant must purchase "extended reporting" coverage for a minimum of five (5) years after completion of contract work.

13.9. **Additional Insured Endorsements.** The City, its City Council, Commissions, officers, and employees of South Pasadena must be endorsed as an additional insured for each policy required herein, other than Professional Errors and Omissions and Worker's Compensation, for liability arising out of ongoing and completed operations by or on behalf of the Consultant. Consultant's insurance policies shall be primary as respects any claims related to or as the result of the Consultant's work. Any insurance, pooled coverage or self-insurance maintained by the City, its elected or appointed officials, directors, officers, agents, employees, volunteers, or consultants shall be non-contributory. All endorsements shall be signed by a person authorized by the insurer to bind coverage on its behalf. General liability coverage can be provided using an endorsement to the Consultant's insurance at least as broad as ISO Form CG 20 10 11 85 or both CG 20 10 and CG 20 37.

13.10. **Failure to Maintain Coverage.** In the event any policy is canceled prior to the completion of the project and the Consultant does not furnish a new certificate of insurance prior to cancellation, City has the right, but not the duty, to obtain the required insurance and deduct the premium(s) from any amounts due the Consultant under this Agreement. Failure of the Consultant to maintain the insurance required by this Agreement, or to comply with any of the requirements of this section, shall constitute a material breach of this Agreement.

13.11. **Notices.** Consultant shall provide immediate written notice if (1) any of the required insurance policies is terminated; (2) the limits of any of the required policies are reduced; (3) or the deductible or self-insured retention is increased. Consultant shall provide no less than 30 days' notice of any cancellation or material change to policies required by this Agreement. Consultant shall provide proof that cancelled or expired policies of insurance have been renewed or replaced with other policies providing at least the same coverage. Such proof will be furnished at least two weeks prior to the expiration of the coverages. The name and address for Additional Insured Endorsements, Certificates of Insurance and Notices of Cancellation is: City of South Pasadena, Attn: Risk Management, 1414 Mission Street, South Pasadena, CA 91030. Phone: (626) 403-7230.

13.12. **Consultant's Insurance Primary.** The insurance provided by Consultant, including all endorsements, shall be primary to any coverage available to City. Any insurance or self-insurance maintained by City and/or its officers, employees, agents or volunteers, shall be in excess of Consultant's insurance and shall not contribute with it.

13.13. **Waiver of Subrogation.** Consultant hereby waives all rights of subrogation against the City. Consultant shall additionally waive such rights either by endorsement to each policy or provide proof of such waiver in the policy itself.

13.14. **Report of Claims to City.** Consultant shall report to the City, in addition to the Consultant's insurer, any and all insurance claims submitted to Consultant's insurer in connection with the services under this Agreement.

13.15. **Premium Payments and Deductibles.** Consultant must disclose all deductibles and self-insured retention amounts to the City. The City may require the Consultant to provide proof of ability to pay losses and related investigations, claim administration, and defense expenses within retention amounts. Ultimately, City must approve all such amounts prior to execution of this Agreement.

City has no obligation to pay any premiums, assessments, or deductibles under any policy required in this Agreement. Consultant shall be responsible for all premiums and deductibles in all of Consultant's insurance policies. The amount of deductibles for insurance coverage required herein are subject to City's approval.

13.16. **Duty to Defend and Indemnify.** Consultant's duties to defend and indemnify City under this Agreement shall not be limited by the foregoing insurance requirements and shall survive the expiration of this Agreement.

14. MUTUAL COOPERATION

14.1. **City Cooperation in Performance.** City shall provide Consultant with all pertinent data, documents and other requested information as is reasonably available for the proper performance of Consultant's services under this Agreement.

14.2. **Consultant Cooperation in Defense of Claims.** If any claim or action is brought against City relating to Consultant's performance in connection with this Agreement, Consultant shall render any reasonable assistance that City may require in the defense of that claim or action.

15. NOTICES

Any notices, bills, invoices, or reports required by this Agreement shall be deemed received on: (i) the day of delivery if delivered by hand, facsimile or overnight courier service during Consultant's and City's regular business hours; or (ii) on the third business day following deposit in the United States mail if delivered by mail, postage prepaid, to the addresses listed below (or to such other addresses as the parties may, from time to time, designate in writing).

If to City	If to Consultant
H. Ted Gerber	David Niknafs, PE
City of South Pasadena	NV5, Inc.

1414 Mission Street
South Pasadena, CA 91030
Telephone: (626) 403-7240
Facsimile: (626) 403-7241

163 Technology Drive Suite 100
Irvine, CA 92618
Telephone: (949) 585-0477
Facsimile:

With courtesy copy to:

Roxanne Diaz, Esq.
South Pasadena City Attorney
Richards, Watson & Gershon
350 South Grand Avenue, 37th Floor
Los Angeles, California 90071
Telephone: (213) 626-8484
Facsimile: (213) 626-0078

16. SURVIVING COVENANTS

The parties agree that the covenants contained in paragraph 5.11 (Records), paragraph 10.4 (Indemnification of CalPERS Determination), Section 11 (Indemnity), paragraph 12.8 (Claims-Made Policies), paragraph 13.2 (Consultant Cooperation in Defense of Claims), and paragraph 18.1 (Confidentiality) of this Agreement shall survive the expiration or termination of this Agreement, subject to the provisions and limitations of this Agreement and all otherwise applicable statutes of limitations and repose.

17. TERMINATION

17.1. **City Termination.** City may terminate this Agreement for any reason on five calendar days' written notice to Consultant. Consultant agrees to cease all work under this Agreement on or before the effective date of any notice of termination. All City data, documents, objects, materials or other tangible things shall be returned to City upon the termination or expiration of this Agreement.

17.2. **Consultant Termination.** Consultant may terminate this Agreement for a material breach of this Agreement upon 30 days' notice.

17.3. **Compensation Following Termination.** Upon termination, Consultant shall be paid based on the work satisfactorily performed at the time of termination. In no event shall Consultant be entitled to receive more than the amount that would be paid to Consultant for the full performance of the services required by this Agreement. The City shall have the benefit of such work as may have been completed up to the time of such termination.

17.4. **Remedies.** City retains any and all available legal and equitable remedies for Consultant's breach of this Agreement.

18. INTERPRETATION OF AGREEMENT

18.1. **Governing Law.** This Agreement shall be governed and construed in accordance with the laws of the State of California.

18.2. **Integration of Exhibits.** All documents referenced as exhibits in this Agreement are hereby incorporated into this Agreement. In the event of any material discrepancy between the express provisions of this Agreement and the provisions of any document incorporated herein by reference, the provisions of this Agreement shall prevail. This instrument contains the entire Agreement between City and Consultant with respect to the transactions contemplated herein. No other prior oral or written agreements are binding upon the parties. Amendments hereto or deviations herefrom shall be effective and binding only if made in writing and executed on by City and Consultant.

18.3. **Headings.** The headings and captions appearing at the commencement of the sections hereof, and in any paragraph thereof, are descriptive only and for convenience in reference to this Agreement. Should there be any conflict between such heading, and the section or paragraph thereof at the head of which it appears, the language of the section or paragraph shall control and govern in the construction of this Agreement.

18.4. **Pronouns.** Masculine or feminine pronouns shall be substituted for the neuter form and vice versa, and the plural shall be substituted for the singular form and vice versa, in any place or places herein in which the context requires such substitution(s).

18.5. **Severability.** If any term or provision of this Agreement or the application thereof to any person or circumstance shall, to any extent, be invalid or unenforceable, then such term or provision shall be amended to, and solely to the extent necessary to, cure such invalidity or unenforceability, and shall be enforceable in its amended form. In such event, the remainder of this Agreement, or the application of such term or provision to persons or circumstances other than those as to which it is held invalid or unenforceable, shall not be affected, and each term and provision of this Agreement shall be valid and be enforced to the fullest extent permitted by law.

18.6. **No Presumption Against Drafter.** Each party had an opportunity to consult with an attorney in reviewing and drafting this agreement. Any uncertainty or ambiguity shall not be construed for or against any party based on attribution of drafting to any party.

19. GENERAL PROVISIONS

19.1. **Confidentiality.** All data, documents, discussion, or other information developed or received by Consultant for performance of this Agreement are deemed confidential and Consultant shall not disclose it without prior written consent by City. City shall grant such consent if disclosure is legally required. All City data shall be returned to City upon the termination or expiration of this Agreement.

19.2. **Conflicts of Interest.** Consultant maintains and warrants that it has not employed nor retained any company or person, other than a bona fide employee working solely for Consultant, to solicit or secure this Agreement. Further, Consultant warrants that it has not paid nor has it agreed to pay any company or person, other than a bona fide employee working solely for Consultant, any fee, commission, percentage, brokerage fee, gift or other consideration contingent upon or resulting from the award or making of this Agreement. Consultant further agrees to file, or shall cause its employees or sub-consultant to file, a Statement of Economic Interest with the City's Filing Officer if required under state law in the performance of the services. For breach or violation of this warranty, City shall have the right to rescind this Agreement without liability. For the term of this Agreement, no member, officer, or employee of City, during the term of his or her service with City, shall have any direct interest in this Agreement, or obtain any present or anticipated material benefit arising therefrom.

19.3. **Non-assignment.** Consultant shall not delegate, transfer, subcontract or assign its duties or rights hereunder, either in whole or in part, without City's prior written consent, and any attempt to do so shall be void and of no effect. City shall not be obligated or liable under this Agreement to any party other than Consultant.

19.4. **Binding on Successors.** This Agreement shall be binding on the successors and assigns of the parties.

19.5. **No Third-Party Beneficiaries.** Except as expressly stated herein, there is no intended third-party beneficiary of any right or obligation assumed by the parties.

19.6. **Time of the Essence.** Time is of the essence for each and every provision of this Agreement.

19.7. **Non-Discrimination.** Consultant shall not discriminate against any employee or applicant for employment because of race, sex (including pregnancy, childbirth, or related medical condition), creed, national origin, color, disability as defined by law, disabled veteran status, Vietnam veteran status, religion, age (40 and above), medical condition (cancer-related), marital status, ancestry, or sexual orientation. Employment actions to which this provision applies shall include, but not be limited to, the following: employment, upgrading, demotion, or transfer; recruitment or recruitment advertising; layoff or termination; rates of pay or other forms of compensation; or in terms, conditions or privileges of employment, and selection for training. Consultant agrees to post in conspicuous places, available to employees and applicants for employment, the provisions of this nondiscrimination clause.

19.8. **Waiver.** No provision, covenant, or condition of this Agreement shall be deemed to have been waived by City or Consultant unless in writing signed by one authorized to bind the party asserted to have consented to the waiver. The waiver by City or Consultant of any breach of any provision, covenant, or condition of this Agreement shall not be deemed to be a waiver of any subsequent breach of the same or any other provision, covenant, or condition.

19.9. **Excused Failure to Perform.** Consultant shall not be liable for any failure to perform if Consultant presents acceptable evidence, in City's sole judgment, that such failure was due to causes beyond the control and without the fault or negligence of Consultant.

19.10. **Remedies Non-Exclusive.** Each right, power and remedy provided for herein or now or hereafter existing at law, in equity, by statute, or otherwise shall be cumulative and shall be in addition to every other right, power, or remedy provided for herein or now or hereafter existing at law, in equity, by statute, or otherwise. The exercise, the commencement of the exercise, or the forbearance from the exercise by any party of any one or more of such rights, powers or remedies shall not preclude the simultaneous or later exercise by such party of any or all of such other rights, powers or remedies.

19.11. **Attorneys' Fees.** If legal action shall be necessary to enforce any term, covenant or condition contained in this Agreement, the prevailing party shall be entitled to an award of reasonable attorneys' fees and costs expended in the action.

19.12. **Venue.** The venue for any litigation shall be Los Angeles County, California and Consultant hereby consents to jurisdiction in Los Angeles County for purposes of resolving any dispute or enforcing any obligation arising under this Agreement.

TO EFFECTUATE THIS AGREEMENT, the parties have caused their duly authorized representatives to execute this Agreement on the dates set forth below.

"City"	"Consultant"
City of South Pasadena	**NV5, Inc.**
By:_____	By:_____
Signature	*Signature*
Printed:_____	Printed: Jeffrey M. Cooper
Title:_____	Title: EVP/COO

Date:_____ Date: 01/06/2025

Attest:

By:_____
Mark Perez, Deputy City Clerk

Date:_____

Approved as to form:

By:_____
Roxanne Diaz, City Attorney

Date:_____

EXHIBIT A

"Scope of Services"

Consultant: NV5, Inc.

Sub-Consultant: Pacific Resources Services (PRS)

Scope:

Civil Design Engineering Services

a. Perform civil engineering services signed and stamped by a registered Professional Civil Engineer in the State of California, for the stated services on an "on-call as needed" basis for various civil engineering projects in the public right-of-way such as street, water, sewer, storm drain, streetlight, buildings and facilities, parks or other projects as assigned by the City.
b. Perform design work for repair, rehabilitation, or other related street improvements, including plan preparation, geometric design, drainage design, pavement delineation, surveying, stormwater pollution prevention plan (SWPPP), and signage and striping plans for street, highways, minor structures, and other public infrastructure.
c. Provide design services for City projects to prepare plans and specifications for City projects, including but not limited to streets, buildings and facilities, trails, landscaping, park design, traffic signal installations or modifications, water systems, storm drain and sewer improvements, upgrades, modifications, extensions, repair or rehabilitation, and other related improvements.
d. Prepare project technical provisions and detailed cost estimates.
e. Provide engineering support services construction assistance.
f. See also: (5) Public Works and Development Land Use, Subdivision Control, Map and Plan Check Services, (6) Traffic/Transportation Engineering Services, (9) Computer Aided Drafting (CAD) Design Services, and (11) Program & Project Management Services.

Structural Design Engineering Services

a. Structural engineering design services include bridges, walls, storm drains, and other Public Works structural facilities, where seismic analysis, structural calculations, design, plan, evaluation of structural components and structural systems to ensure the safety and comfort of users or occupants is conducted.
b. Consultant must be registered in the State of California as a professional structural engineer for work requiring a structural engineer's seal, and provide experienced personnel, equipment and facilities to perform tasks. Civil

engineers registered in the State of California may perform structural engineering work allowed by the California Business and Professions Code.

c. Assess structural stability and load bearing capacity of existing structures including areas proposed to be modified or used for additional loads.
d. Provide structural design for new structures or modifications of existing structures.
e. Provide alternative structural layouts or options that can be applied to project requirements.
f. Provide technical memorandum on assessment of structures.
g. Provide complex structural analyses using computer programs for complex projects.
h. Provide technical specifications for selection of materials and methods.
i. Provide seismic and wind design review of existing structures.
j. Provide detail design of concrete slabs, retaining wall, foundations, floor plans, roofing and framing plans, and pipe and equipment support and anchorage, for operation, maintenance, and administrative facilities.
k. Participate in peer review and value engineering of structural design completed by other consultants.
l. Prepare construction cost estimates.
m. Provide structural engineering support during bidding and construction of projects.
n. Provide record drawings.
o. See also: (19) Seismic and Structural Examination Services.

Facility Design Engineering Services

a. Perform mechanical, electrical, and plumbing engineering design services signed and stamped by a qualified registered Professional Engineer, including design for repair, remodeling, or upgrading City's facilities such as Library, Senior Center, Police Station, Fire Station, Recreation/Community Service Buildings, Corporate Yards, City Hall, Parks, or other facilities per City request in compliance with current applicable building codes:
    i. Mechanical engineering design services include HVAC system, heating, cooling, ventilation, smoke control and exhaust system.
    ii. Electrical engineering design services include solar power, power supplies, distribution, conduit/wiring, back-up generators, batteries, electric vehicle chargers, switches, transformers, appliances, lighting, fire alarms, signal systems, arc flash studies, electrical calculations for short circuits, voltage drop, etc.
    iii. Plumbing engineering design services include hot and cold water systems, water heaters, fire suppression systems, and wastewater systems.

b. Design services include: performing concept and feasibility studies of project alternatives; preparing preliminary design reports; preparing plans, specifications, estimates (opinions of construction cost) and other design related documents; providing drafting and computer aided drafting support; preparing and processing permit applications for building, various regulatory, and environmental permits.; performing record drawing, utility, or other searches; performing field investigations; performing engineering design services; reviewing and recommending award of construction contracts; utility coordination; providing design services during construction, including periodic site visits, review of shop drawings, and preparing responses to contractor's requests for information (RFIs), preparing record ("as built") drawings; and attending project or coordination meetings as necessary.

Public Works and Development Land Use, Subdivision Control, Map and Plan Check Services

a. Coordinate the intake and processing of development project plans, specifications, tentative maps, final maps, land use applications, and other development related submittals, and review for completeness.
b. Manage, coordinate, and schedule with City staff, consultants, utilities, and private and public entities to perform required reviews.
c. Review, assess, document, and organize all existing active development projects by location, project type, and project status.
d. Review, check and make recommendations regarding land use applications.
e. Perform review of parcel maps, tract maps, tentative maps, final maps, easements, lot line adjustments, and parcel mergers.
f. Perform review of studies and reports such as sewer, drainage, and Water Quality Management Plans (WQMP) utilizing commonly used software programs and Los Angeles County Hydrology and Local Drainage Manuals.
g. Perform mapping and prepare legal descriptions for right-of-way acquisitions, easements, and vacations.
h. Perform review of engineering quantity estimates and costs, rough and precise grading improvement plans, erosion control, geological and geotechnical reports, storm drain improvement plans, hydrology and hydraulics reports, landscape plans, federally and state mandated reports required under National Pollutant Discharge Elimination System (NPDES) and Air Quality Management District (AQMD) guidelines, utility plans, (including domestic and sanitary sewer improvements), street improvement plans, signing and striping plans, traffic signal plans, and traffic studies and reports.

i. Review tentative maps and other developments and provide recommendations related to engineering and water pollution reduction.
j. Review plans for consistency with other planned developments.
k. Prepare plan check comments in concise and understandable manner.
l. Recommend, draft, and issue conditions of approval and plan reviews for development, including off-site improvements and financial obligations.
m. Application of requirements related to the City's Southwest Monterey Hills Construction Regulations.
n. Establish bond amounts, determine financial obligations and other development fees within the proper sequence of development reviews;
o. Perform additional functions, including, but not limited to, the preparation of general correspondence and staff reports, and coordination with developers, engineers, staff, and the general public related to the engineering review of private developments.
p. Assist with development of engineering design standards and guidelines to assist with the plan checking process
q. Prepare Staff reports for City Council, and attend City Council and other city meetings as required.
r. Prepare and update policies and procedures for land development project reviews.
s. Provide public works and development land use, subdivision control, map and plan check services signing and stamping by a registered Professional Civil Engineer in the State of California.

Traffic/Transportation Engineering Services

a. Provide consulting services related to parking management, traffic counts, traffic modeling, signal timing, development and review of traffic studies, development and review of traffic impact analysis reports (utilizing City's traffic impact analysis methodology), and preparation of reports and/or scopes of work.
b. Provide consulting services related to development and review of level of service (LOS) analyses and vehicle miles traveled (VMT) analyses.
c. Provide consulting services related to engineering studies of traffic conditions, pedestrian characteristics, and physical characteristics related to the installation of a traffic control signals or other traffic/pedestrian devices.
d. Provide traffic engineering and transportation design support for the preparation of preliminary and final plans and specifications for all types of traffic and intelligent transportation system (ITS) projects, signed and stamped by a registered Professional Traffic Engineer or Civil Engineer in the State of California, including but not limited to: traffic signals (LED displays, mast

arm designs, etc.), vehicle detection system (video, loop, microwave, radar, ultrasonic, etc.), interconnect systems (hardware, phone, cellular phone, spread spectrum, radio, etc.), pavement markings (tape, thermoplastic, water based, etc.), sign and sign support systems (wood, metal and composite systems), intelligent transportation systems devices (variable message boards, closed circuit television, fiber optics and other communications media etc.), intersection designs (simple lane additions, signalizations, continuous flow intersections, diverging diamonds, and round-a-bouts), preliminary surveys for designs, sign layouts, guardrail designs, roadway re-striping and roadway design, calculation of quantities and estimates for plans, fiber optic networking drawings and fiber optics splicing plans, ITS Network plans for interconnection to Traffic Management Centers, and ITS Network Support Plans.

e. Prepare construction and maintenance related signing plans and schedules.
f. Conduct accident analyses needed for consideration of safety measures in the designs and planning of transportation projects.
g. Perform individual signal timing plans, corridor signal timing progression plans and optimization plans.
h. Provide miscellaneous services regarding traffic operations to assist with the City's day to day operations, including advisement and recommendations on traffic and transportation related matters.
i. Develop conceptual phased construction plans considering geometric design, capacity analysis, construction signing, temporary guide signing, temporary pavement markings, temporary signal design, and optimization of traffic flow.
j. Prepare freeway guide signing plans consistent with the Federal Highway Administration Manual on Uniform Traffic Control Devices (MUTCD) and the City's policies. Prepare sign bridge plans, specialized sign support details, sign plans and sign layouts.
k. Provide railroad crossing design and coordination services.
l. Provide technical assistance and reports related to traffic engineering and ITS issues, including assisting the City in procuring ITS telecommunications/network related hardware, software and pertinent materials.
m. Develop plans and specifications for City ITS and telecommunications/network related projects or tasks including developing network, software and hardware design and procurement, fiber assignments, fiber design and all pertinent studies, reports, drawings, diagrams, specifications, and manuals both in hard and electronic formats.
n. Provide corridor-planning analysis for future fiber optic backbone implementations including determining future node points for ITS elements,

number of fiber strands required for future implementations, and best practices to facilitate private/public partnerships to build the fiber backbone.

o. Train City personnel on use of specialized traffic, transportation engineering and telecommunications/network related software in addition to any training requested.
p. Provide structural inspection and report of Traffic Signal poles and mast arms, ITS structures and sign structures.
q. Provide construction management, inspection and completion of appropriate City documents as required, including ITS construction and field management.
r. Conduct traffic signal and traffic device needs studies and develop reports, related to speed, progression, congestion, incidents, removal of vehicles, etc.
s. Conduct vehicular and pedestrian/bicyclist traffic volume count studies and develop reports as needed for design and operations analysis.
t. Collect, analyze, and summarize transportation related field observations and data from reporting sources, including but not limited to City collision/incident data, California Statewide Integrated Traffic Records System (SWITRS), etc.
u. Conduct traffic signal warrant analyses and develop reports.
v. Provide technical support and training on various travel demand and traffic operations models including, but not limited to VISSIM, CORSIM, SYNCHRO, and HCS.
w. Provide Active Transportation Program consulting and design services that promote pedestrian, biking/cycling, and transit travel, placemaking, sustainability, community economic benefits, and promote healthy lifestyles.
x. Provide transportation modeling services, including level of service (LOS), vehicle miles traveled (VMT), and other progressive modeling techniques.
y. Provide consulting service on street and transportation design, transportation networks, placemaking, modeling, transit, and other transportation related concepts.
z. Provide traffic and transportation public engagement and outreach services. Attend meetings as instructed, prepare visual aids for meetings as needed, and prepare letters of correspondence and meeting minutes.

Geographic Information Systems (GIS) Support Services

a. Maintain and edit GIS datasets/layers.
b. Create new datasets and GIS maps.
c. Create, update, and print GIS maps
d. Assist City with in house production of map documents.
e. Advise the City on matters relating to GIS projects and software.
f. Maintain and keep records of GIS-related software and software licenses.

g. Create, customize, and maintain GIS related web pages.
h. Create, customize, and maintain databases.
i. Work with Los Angeles County to acquire GIS and Assessor updates.
j. Print large format maps.
k. Obtain GIS data as needed from other sources.
l. Provide customized solutions for special projects as requested.
m. Providing GIS technical assistance and training to staff.

Computer Aided Drafting (CAD) Design Services

a. Develop concept designs.
b. Prepare construction documents including plans, specifications, and estimates.
c. Assist with required state and federal documentation for design work associated with state or federal funded construction projects.
d. Provide plan check and/or peer review per City standard details and specifications.
e. Prepare project drawings in CAD.
f. Provide constructability reviews.
g. Provide construction services.
h. Anticipated project types include, but not limited: street improvement projects, bike and pedestrian facilities (bike lanes, pedestrian paths, multipurpose trails), preliminary engineering in support of grant applications, traffic related projects including traffic signal design, signage and marking, MUTCD compliance, street light design, drainage Improvement projects: alternate drainage, reclaimed water pipeline, recycled water related planning and design, etc., intersection modifications, and sidewalk improvement projects (ADA compliance).

Surveying Services

a. Perform surveys conforming to the requirements of the Land Surveyors Act and Caltrans Survey manual.
b. Provide design, construction, and as-built surveys, preparation of legal description and plat maps, monument preservation/recordation and other surveying services.
c. Establish horizontal and vertical control bases using benchmarks and datum that is common for Los Angeles County Cities.
d. Perform aerial photogrammetry.
e. Use aerial photogrammetry or field survey data to prepare base maps.
f. Prepare topographic maps with elevations contours and spot elevations shown.

g. Research and provide on maps and surveys street centerlines and right-of-way boundaries.
h. Survey and prepare plats and legal descriptions with sketches for easement and property acquisition and lot line adjustments.
i. Provide surveys to support geotechnical investigations, utility locating, and the design of water, reclaimed water, water reclamation, streets, site developments, and electrical systems.
j. Reset survey monuments disturbed or removed during construction and identify the hours separately on work performed.
k. Provide field staking and cut sheets for construction projects.

Environmental Consulting and Document Services

a. Provide consulting and document development services for environmental feasibility studies, CEQA & NEPA documents, development applications, mitigation monitoring preparation and compliance.
b. Provide agency coordination, team management, quality assurance reviews, and public engagement and outreach.
c. Provide complete environmental planning and document preparation in accordance with CEQA and NEPA requirements, special studies such as but not limited to noise, socioeconomic, biological, cultural, air quality, Phase I site assessments, hazardous waste, archaeological, historical, and tribal consultation, as needed on a project specific basis as required by the City and/or Caltrans. Typical project to include CIP projects, road widening, new construction, rehabilitation projects, storm drain, signal installations, reservoirs, booster stations, projects in Caltrans right-of-way, and water and sewer installations.
d. Provide environmental document development services including but not limited to preparation of: maps for environmental evaluation, public and agency scoping, noise studies, noise abatement reports, air quality studies and reports, initial site assessments, natural environmental study reports, cultural resource studies, potential effect identification reports, Native American consultation reports, visual/aesthetic evaluation reports, community impacts assessment reports, climate change analysis/assessment reports, cumulative impacts analysis reports, location hydraulic/flood plain reports, paleontology studies, draft environmental documents, responses to review comments, final environmental documents, and environmental commitments records.

Environmental Monitoring Services

a. Noise sampling collection;
b. Ambient air samples collection;
c. Storm water sampling and laboratory analysis;
d. Surface water sampling and laboratory analysis;
e. Groundwater sampling and laboratory analysis;
f. Potable water sampling and laboratory analysis;
g. Soil fertility, soil ecology, and flora ecology sampling and analysis; and
h. Preparation of reports describing in detail the sampling efforts, laboratory results, data, quality assurance/quality control, and results.

Sustainability, Electrical, Solar, and Energy Design and Assessment Services

a. Provide consulting services in energy conservation measures.
b. Provide consulting services on heating ventilation & air conditioning (HVAC) system optimization, retrofit, upgrade or replacement.
c. Provide consulting services on interior and exterior lighting retrofit or replacement.
d. Provide consulting services on outside, street, and area lighting retrofit or replacement.
e. Provide consulting services on open standards wireless platform and applications to control, dim, monitor, and help maintain street lighting LED retrofit investments, and enable a platform for future City applications such as parking, automated meter reading, charging stations, traffic, etc.
f. Provide consulting services Building Automation System (BAS) installation, upgrade, or expansion leveraging existing technology.
g. Provide consulting services building envelope upgrades.
h. Provide consulting services infrastructure improvements that reduce energy and/or reduce operating costs.
i. Provide consulting services on project, design, installation, purchase, and construction financing sources and solutions.

j. Provide consulting services on electrical vehicle (EV) and EV charging solutions, including, but not limited to, use and site assessment, rebate and financial planning, owner agreements, EV purchase and use, EV supply equipment (EVSE) purchase and installation.
k. Provide consulting services on EV charging infrastructure design, equipment selection, installation, construction, operation, maintenance, network infrastructure, equipment applications, mobile applications, payment

gateways, administration, power management, energy rate requirements and selection, station management, customer management, site management, driver management, radio-frequency identification (RFID) fob management, access control roles, pricing management, and EV fleet management.

l. Analyze energy interval data, examine load profiles and seasonal variations to identify potential storage capacity and energy values.
m. Analyze potential load impacts from EV charging, and provide recommendations.
n. Develop solar modeling and rendering using a software (e.g. Helioscope), and build energy model to test and evaluate scenarios, pricing, storage amounts, and rate options.
o. Provide site assessment services verifying solar array, meter, and backup battery storage locations, assessing shading construction impacts, switchgear and other solar, electrical and/or battery backup equipment.
p. Provide other training, remote monitoring services, or other related support services.
q. Perform comprehensive investment-grade audits of City facilities and infrastructure, identifying and analyzing all opportunities for water and energy cost savings, including, but not limited to, buildings, parks, water facilities, and city-owned streetlights.
r. Perform comprehensive feasibility analyses of distributed generation opportunities for City facilities, including solar photovoltaics (PV) and solar arrays, and any other economically and environmentally viable distributed generation (DG) solutions.
s. Analyze and report on energy efficiency (electricity and natural gas) and water usage at all City facilities, providing an analysis of building systems, equipment, operations, and operational procedures for optimal performance, include the following thorough assessments: existing equipment; equipment replacement, repair, or rehabilitation; potential alternative processes; proposed energy and water efficiency and conservation projects; equipment controls; lighting (internal/external for buildings/parks and remaining non-LED street lights); HVAC equipment; well equipment; automation; space utilization and programming; pumps; non-computerized irrigation systems controllers; building envelope performance with evaluation for cooling/heat gain or loss, transmission and leakage, and solar potential, alternative fuel sources, and identifying facility or occupancy changes that could affect energy/water use.
t. Review historical data of existing energy usage, meet with the facilities' staff, tour the facilities, and identify all major lighting, HVAC equipment and systems, determining occupancy schedules, energy use patterns, etc.

u. Prepare reports, present findings and address questions for City and at public meetings.

Construction Management, Administration, and Monitoring Services

a. Provide services from a construction manager with a minimum of five (5) years of experience managing public works construction and private construction, including construction of streets, sidewalks, curb and gutter, underground and aboveground utilities, storm drains, buildings, and other projects.
b. Provide services from a resident engineer by a registered Professional Civil Engineer in the State of California, for the stated services on an "on-call as needed" basis for various civil engineering projects as assigned by the City.
c. Provide complete construction management, construction administration, inspection services and labor compliance for Capital Improvement Program (CIP) projects and private land development projects, including but not limited to project scheduling, project controls, project management, collaboration and claims resolution, daily reports and capturing photos, Contractor's labor force compliance monitoring, inspection/monitoring of traffic control procedures and traffic control plan, conducting progress meetings and preparing meeting minutes, coordinating with agencies and stakeholders, monitoring the project schedule, verifying quantities, and assuring quality control, and site safety.
d. Maintain complete and accurate project records, including monthly progress pay estimates, daily construction reports, extra work reports, contract change orders, labor and equipment records, correspondence, personnel records, records verifying stormwater pollution prevention plan (SWPPP) compliance, processing submittals of requests for information (RFIs), weekly statement of working days, change orders, punch-lists, and as-builts.
e. Maintain compliance of project records in compliance with the Caltrans manual, safety-related activities, implementing security procedures, coordinating survey and materials testing, as well as processing control documents, submittals, RFIs, weekly statement of working days, change orders, work change directives, , and compliance with NPDES and Caltrans encroachment permit requirements, if required
f. Attend pre-construction meetings, project progress meetings, and provide assistance in responding to all questions in timely manner.
g. Assist City in conducting and coordinating field meetings with contractors and act as the City's liaison for coordination and communication with other agencies, engineers, and architects as needed. Coordinate with design

engineers and project managers on design issues encountered during construction.

h. Review project contract documents and perform constructability reviews.
i. Review contractor's submittals in accordance with the requirements of project specifications and the City's requirements prior to final approval.
j. Review, negotiate, process and monitor contract change orders with the City's approval. Review extra work invoices.
k. Review and respond to RFIs in a timely manner.
l. Comply with grant requirements for local, state, and federal funded projects.
m. Provide labor compliance monitoring.
n. Provide construction inspection and quality control services.
o. Provide construction material testing and compaction testing.
p. Developing solutions to problems identified in the field with City approval.
q. Maintain all records and meet reporting requirements.
r. Provide community outreach and public outreach services as required.
s. Provide project status and overall condition of construction projects, including cost, budget, and schedule.
t. Identify and issue notice to contractor of safety concerns and violations.
u. Review and approve punch lists.
v. Participate and assist in conducting final inspection, testing and release of facilities.
w. Review and approve record drawings at project completion.
x. Assist in preparation of daily pay estimates in accordance with the inspection daily report, and assist in preparation of contractors monthly pay estimates.
y. Report all unresolved issues and potential claims to the City's representative in writing on a daily basis.
z. Other construction management duties as necessary to support City projects in construction.

Inspection Services

a. Provide inspection services from an inspector with a minimum of five (5) years of experience inspecting public works construction and private construction, including construction inspection of streets, sidewalks, curb and gutter, underground and aboveground utilities, storm drains, buildings, and other projects.
b. Review plans and specifications, and provide construction inspection/ observations for development projects related to the public right-of-way.
c. Observe construction of improvements by developers and/or contractors and make recommendations regarding completion and acceptance of the work.

d. Provide construction observations associated with work performed by developers on City streets, medians, slopes, parks, and other areas to ensure compliance with approved plans, specifications, permits, and City guidelines and standards.
e. Inspect plants and trees and make recommendations on acceptance of the plant materials.
f. Inspect landscape and irrigation improvements for compliance with approved plans.
g. Ensure that materials and completed work comply with plans, specifications, and design criteria.
h. Provide inspection services from an inspector with a minimum of five (5) years of experience inspecting public and private construction, and certification as a Qualified Stormwater Practitioner (QSP).
i. Inspect and provide recommendations for the installed Best Management Practices (BMP) for water quality.
j. Inspect street and storm drain improvement for compliance with approved plans.
k. Inspect approved work and installed water quality measures.
l. Prepare general correspondence and daily construction inspection reports, and coordinate with developers, engineers, staff, and the public.

Seismic and Structural Examination Services

a. Conducted by a Structural Engineer licensed by the State of California.
b. Provide detailed analysis accompanied by calculations, and an evaluation of mitigating alternatives.
c. Provide detailed structural and seismic analysis, based on the collected documentation, examination findings, geotechnical evaluation, demand and capacity calculations, and any other reviewed or collected data and information.
d. Provide analysis including a conclusive evaluation of repair, rehabilitation, and replacement alternatives for subject structure including inspected internal and external components, as well as alternative prioritization and recommendations (considering a short-term, mid-term, and long-term asset improvement life cycle).
e. Perform supporting structural and seismic design and capacity calculations.
f. Perform load to capacity calculations.

Material Testing and Geotechnical Engineering Services

a. Perform sub-surface exploration and material testing in accordance with City standards and/or Caltrans standards for street, facility, and other capital improvements.
b. Conduct geotechnical examinations of selected sites, based on data and observations collected from soil boring(s), including an evaluation of subsurface conditions, soil classification and relevant attributes (moisture content, compressive strength, etc.), settlement, bearing capacity / resistance, seismic considerations, and any other related concerns.
c. Provide comprehensive geotechnical reports including calculations and analysis of the subsurface profile and its impact on the seismic stability and structural integrity of the reservoir.
d. Perform building materials testing including welding on structural steel elements in accordance with current building standards and provide geotechnical services for all projects.
e. Perform source inspection of miscellaneous items and fabricated products such as steel girders, concrete girders and welded sign structures used on the State highway system.
f. Review material submittals for compliance with project specifications and applicable standards and regulations.
g. Perform background review of sites based on published and unpublished groundwater and geologic information.
h. Provide preliminary evaluation of seismic hazards and design parameters using fault maps and current building code.
i. Provide field exploration including drilling, sampling, and logging of test borings.
j. Perform geologic field mapping.
k. Perform soil analysis, soil classification, and site-specific soil characterization.
l. Provide recommendations on soil improvement.
m. Perform ground water investigation and control.
n. Provide design parameters for: Grading; Remedial measures; Shoring; Excavation; Backfill; Compaction; Slope stability; Soil bearing pressure; Foundation design, Lateral earth pressures for design of retaining walls; Groundwater dewatering.
o. Provide settlement evaluation and analyze potential for expansion.
p. Provide soil corrosivity testing and analysis, Evaluate imported earth materials to be used for fill.

q. Provide laboratory testing per City and Caltrans standards to determine maximum dry density and optimum moisture content for fill and backfill, and sand equivalent of all bedding material.
r. Perform laboratory tests on pipe bedding material and aggregate base material to verify their compliance with the project specifications.
s. Evaluate over-excavation, backfill, and compaction procedures.
t. Evaluate field procedures, progress, and testing results.
u. Observe site grading and fill placements, including in-place soil density testing of compacted fill, optimum soil moisture density test and relative compaction per project specifications.
v. Provide foundation engineering and inspection for structures; Inspect and evaluate earth-retaining structures and excavations.
w. Perform sieve analysis; Determine R-value; Pavement inspection and testing including preparation of pavement structural section based upon laboratory R-value, sieve analysis, and sand equivalent testing;
x. Perform concrete inspection and testing including air content and slump testing; Prepare standard test cylinders for concrete and provide laboratory compressive strength testing;
y. Attend meetings throughout the duration of the project as needed to provide technical advice on issues, project schedule, cost control and other related matters.
z. Prepare reports to include: description of field procedures, tabulation of daily field compaction test data, laboratory data, conclusions and recommendations. Provide reports bearing the Registered Professional Engineer Seal with the signature and license number of the geotechnical engineer responsible for preparation of the report.

Stormwater, Flood Plain, and Hydrogeological Engineering Services

a. Planning and design of water resources projects related but not limited to: the capture, retention and direct use of stormwater and surface water; groundwater recharge; multi-purpose watershed management facilities; low impact development (LID) measures; engineered wetlands for stormwater treatment; landscaping that utilizes native and other plant species for stormwater treatment and carbon sequestration; and stream and upland habitat creation and restoration.
b. Engineering assistance with construction, monitoring, and operations and maintenance.
c. Engineering assistance with National Pollutant Discharge Elimination System (NPDES) related programs.
d. Preparation of hydrology and hydraulic analysis and reports.

e. Preparation of Water Quality Management Plans (WQMP), Stormwater Pollution Prevention Plans (SWPPP), or related NPDES documents/reports.

Building and Facility Assessment Services

a. Prepare comprehensive facility assessment studies that include survey, inspection, inventory of building components, assessment of the existing conditions, corrective recommendations, preventative maintenance recommendations, budget estimates and timeline for all corrective work and preventative maintenance for all City Facilities.
b. Assess and provide recommendations on building envelopes, including condition of the outer shell of the building including walls, doors, windows and roofs.
c. Assess and provide recommendations on structural integrity, including walls and foundations.
d. Assess and provide recommendations on interior walls, ceilings, signage, paint, wall coverings, flooring and casework.
e. Assess and provide recommendations on mechanical systems, HVAC, exhaust, ventilation and controls.
f. Assess and provide recommendations on electrical systems, both interior and exterior, including distribution and lighting.
g. Assess and provide recommendations on plumbing systems, both interior and exterior.
h. Assess and provide recommendations on elevator systems.
i. Assess and provide recommendations on life safety and security systems, including adequacy of security for intended uses.
i. Assess and provide recommendations on Americans with Disabilities Act (ADA) Accessibility, both interior and exterior.
j. Assess and provide recommendations on preventative maintenance programs, requirements, or recommendations.
k. Assess and provide recommendations on sustainability components such as solar and alternative energy.
l. Assess and provide recommendations on space planning and present/future functional use of facilities.
m. Assess and provide recommendations on energy usage, perform energy audits.

n. Provide recommendations for environmental abatement, including, but not limited to lead/asbestos.
o. Assess and provide recommendations on in accordance with the latest versions of the California Building Standards Code.

p. Assess and provide recommendations on in accordance with the requirements of the Secretary of the Interior Design Standards and local Historic Preservation Guidelines.

Assessment District Services

a. Obtain all available information from the City regarding the district, including the current assessment databases, electronic map files from the City, a listing of projected expenditures and revenues and any additional information. Update the current database files with the latest Assessor's parcel numbers and land use information.
b. Review district budgets and confirm schedule; attend the City Council meetings considering the Resolutions of Intention and the public hearing, and provide technical support and answer questions.
c. Prepare the assessment report setting the annual assessment rates for the next fiscal year based on budget estimates from City. Furnish electronic copies of the draft reports and preliminary assessment rolls for review and comment.
d. Prepare assessment Rolls in electronic format, as required by the County Auditor-Controller for inclusion of assessments on the property tax bills. Submit the rolls to the County and, after receipt of the County's exception report, make any required corrections.

EXHIBIT B

"Approved Fee Schedule"

FEE PROPOSAL/SCHEDULE

Fee Schedule

Rates are effective through the initial term of the contract. After this time, NV5 may request a rate increase not to exceed the current Consumer Price Index (CPI).

ENGINEERING SERVICES (CATEGORIES 1, 2, 5, 6, 9, 19)	HOURLY RATE**
Principal	$230
Senior Project Manager	$205
Project Manager	$185
Quality Assurance Manager	$185
Senior Engineer	$165
Project Engineer	$140
Assistant Engineer	$130
Traffic Engineer	$225
Designer	$120
Plan Check Engineer III	$185
Plan Check Engineer II	$165
Plan Check I	$135
Engineering Technician	$90
CADD Drafter	$90
Administration	$90
CONSTRUCTION SERVICES (CATEGORIES 16, 17)	**HOURLY RATE****
Senior Construction Manager	$185
Construction Manager	$165
Senior Office Engineer	$140
Office Engineer	$120
Senior Construction Inspector (Prevailing Wage)*	**$159**
Construction Administration	$90
SURVEY TECHNICAL SERVICES (CATEGORIES 8, 10)	**HOURLY RATE****
Engineering Aide/Planning Aide	$89
Project Assistant	$95
Project Administrator	$110
CADD Technician I	$115
CADD Technician II	$126
CADD Technician III	$149
Sr. CADD Technician/Designer	$160
Design Supervisor	$163
GIS Technician I	$110
GIS Analyst	$149

Fee Schedule

Rates are effective through the initial term of the contract. After this time, NV5 may request a rate increase not to exceed the current Consumer Price Index (CPI).

SURVEY PROFESSIONAL SERVICES (CATEGORIES 8, 10)	HOURLY RATE**
Junior Engineer/Planner/Scientist/Surveyor	$131
Assistant Engineer/Planner/Scientist/Surveyor	$149
Associate Engineer/Planner/Scientist/Surveyor	$168
Senior Engineer/Planner/Scientist/Surveyor	$184
Manager	$236
Associate	$247
Principal	$275
FIELD SURVEY (CATEGORIES 8, 10)	**HOURLY RATE****
1-Person Survey Crew*	$185
2-Person Survey Crew*	$315
3-Person Survey Crew*	$385
AUDIOVISUAL, ELECTRICAL, FIRE PROTECTION, MECHANICAL, PLUMBING, SECURITY CONSULTING AND DESIGN SERVICES (CATEGORIES 3, 15, 24)	**HOURLY RATE****
Sr. Principals	$300
Principals	$275
Directors	$250
Associate Directors	$225
Sr. Managers	$200
Sr. Engineer/Manager	$175
Sr. Project Manager/Sr. Consultant	$160
Project Manager/Engineer/Consultant	$130
Sr. Designer/Sr. Engineer Assistant	$100
Designers/Engineer Assistant	$90
Sr. Drafter/CADD Operator	$85
Drafter/CADD Operator	$65
Administrative	$65
ENVIRONMENTAL - GEOLOGISTS, HYDROGEOLOGISTS, ENGINEERS, INDUSTRIAL HYGIENISTS, SCIENTISTS + SUPPORT PERSONNEL (CATEGORIES 12, 13, 21)	**HOURLY RATE****
Senior Principal	$240
Principal	$230
Senior III	$205
Senior II	$195
Senior I	$185

Fee Schedule

Rates are effective through the initial term of the contract. After this time, NV5 may request a rate increase not to exceed the current Consumer Price Index (CPI).

Staff III	$170
Staff II	$165
Staff I	$155
Associate III	$145
Associate II	$135
Associate I	$125
Specialist III	$105
Specialist II	$95
Specialist I	$80
Project Scientist	$62
Financial Analyst II	$115
Administrative I	$75
PUBLIC OUTREACH (CATEGORY 16)	**HOURLY RATE****
Project Manager	$235
Strategic Adviser	$235
Assistant Project Manager	$205
Integrated Marketing Specialist	$170
Media Relations Specialist	$155
Graphic Designer	$145
Project Coordinator	$130
ASSESSMENT DISTRICT SERVICES (CATEGORY 26)	**HOURLY RATE****
Principal/Assessment Engineer	$250
Senior CAD Technician	$135
Project Administration	$105
REIMBURSABLE EXPENSES	**COST**
Reproduction	Cost
Consultant Services	Cost + 15%
Automobile Transportation	per IRS standard
Delivery, Freight, Courier	Cost
Agency Fees	Cost
Commercial Travel	Cost

* Assumes prevailing wages are applicable for field work.

** Rates for Technical Staff are based on an 8-hour workday, Monday through Friday. Work in excess of eight (8) hours in one day will be charged a premium of 1.5 times the quoted rates. Work over 40 hours in one week will be charged at 1.5 times the quoted rate. Work over 12 hours in one day or over eight (8) hours on the seventh consecutive day or worked holidays will be charged at 2.0 times the quoted rates.

D

FEE PROPOSAL/SCHEDULE

GEOTECHNICAL SERVICES – CATEGORIES 16, 20	
PROFESSIONAL STAFF	
Personnel	
Senior Principal Engineer / Geologist	$245.00/hr.
Principal Engineer / Geologist	$225.00/hr.
Associate Engineer / Geologist	$205.00/hr.
Senior Engineer / Geologist	$185.00/hr.
Project Engineer / Geologist	$155.00/hr.
Senior Staff Engineer / Geologist	$135.00/hr.
Staff Engineer / Geologist	$120.00/hr.
Senior CQA Manager	$170.00/hr.
Project Manager	$150.00/hr.
Field Supervisor	$150.00/hr.
Administration Staff	$75.00/hr.
FIELD STAFF	
	Prevailing Wage*
Soil / ACI Technician I	$122.00/hr.
- Vehicle Charge	$50.00/day
- Equipment Charge	$5.00/hr.
ICC Special Inspector I (Concrete, Masonry, Steel, Bolt, Fireproofing)	$125.00/hr.
Certified Welding Inspector I	$125.00/hr.
NDT Technician	$128.00/hr.
Laboratory Technician	$80.00/hr.
Ground Penetrating Radar (Technician and Equipment)	$198.00/hr.
Coring Equipment Fee	$70.00/hr.
Torque/Pull Testing (Technician and Equipment)	$130.00/hr.
"Wildcat", 35-lb hammer Dynamic Cone Penetrometer (DCP) with tech	$400.00/hr.
Lightweight 5-lb Gas Dynamic Cone Penetrometer (DCP) equip with tech	$180.00/hr.
Seismic Refraction Survey Using Geode 24-Channel Seismodule	$3,150.00
Fall of Potential Ground Testing (Ground Rod Test) - Initial Test	$975.00
Fall of Potential Ground Testing (Ground Rod Test) - Subsequent Test	$585.00
Pick-Up	$80.00/hr.
LABORATORY FEE SCHEDULE	
Asphalt Concrete	
Asphalt Mix Design Review	$375.00/ea.
Hveem Stability	$215.00/ea.
Hveem Unit Weight Sample Requiring Compaction	$200.00/ea.
Marshall Stability, Flow & Unit Weight	210.00/ea. (per test specimen)
Maximum Theoretical Unit Weight (Rice)	$210.00/ea.
Extraction - Ignition Oven (including gradation)	$245.00/ea.
Percent Swell	$160.00/ea.
Unit Wt Compacted Sample (Specific Gravity)	$95.00/ea.
Aggregates	
Absorption Test, Coarse Aggregate	$54.00/ea.
LABORATORY FEE SCHEDULE (CONTINUED)	
Absorption Test, Fine Aggregate	$54.00/ea.

FEE PROPOSAL/SCHEDULE

Clay Lumps & Friable Particles	$135.00/ea.
Cleanness Value	$160.00/ea.
Crushed Particles, Percent	$205.00/ea.
Durability Index, Coarse Aggregate	$130.00/ea.
Durability Index, Fine Aggregate	$130.00/ea.
Abrasion Resistance by LA Rattler	$205.00/ea.
Organic Impurities in Sand	$80.00/ea.
Sieve Analysis Coarse Aggregate	$100.00/ea.
Sieve Analysis Coarse & Fine Aggregate (includes Wash)	$140.00/ea.
Sodium Sulfate Soundness (5 cycle test per primary size)	$390.00/ea.
Specific Gravity, Fine Aggregate	$95.00/ea.
Specific Gravity, Coarse Aggregate	$85.00/ea.
Unit Weight (per cubic foot) Voids in Aggregate	$75.00/ea.
Rock Core (Compressive Strength)	$95.00/ea.
Structural/Reinforcing Steel	
Headed Rebar Tensile Test - No. 8 Bar and Smaller <	$115.00/ea.
Headed Rebar Tensile Test - No. 9 Bar to No. 11	$140.00/ea.
H. S. Bolt Conformance– Bolt, Nut & Washer (DSA)	$480.00/ea.
Mechanically Spliced Reinforcing Steel - No. 8 Bar and Smaller <	$200.00/ea.
Mechanically Spliced Reinforcing Steel - No. 9 Bar to No. 11	$215.00/ea.
Mechanically Spliced Reinforcing Steel - No. 14	$235.00/ea.
Mechanically Spliced Reinforcing Steel - Slippage	$42.00/ea.
Mechanical Tests, Hardness Test, Rockwell	$118.00/ea.
Prestressed Steel, Tensile Test, Strand (7-wire Coated)	$235.00/ea.
Prestressed Steel, Tensile Test, Strand (7-wire Uncoated)	$275.00/ea.
Reinforcing Steel, Tensile Test – No. 8 Bar and Smaller <	$95.00/ea.
Reinforcing Steel, Tensile Test – No. 9 Bar to No. 11	$108.00/ea.
Reinforcing Steel, Tensile Test – No. 11 Bar and Greater >	Quote
Reinforcing Steel, Bend Test	$75.00/ea.
Spray-applied Fireproofing Density Tests	$110.00/ea.
Structural Steel, Tensile – Up to 200,000 lbs.	$160.00/ea.
Structural Steel, Bend Test	$105.00/ea.
Welded Specimens, Tensile Test	$135.00/ea.
Chemical Analysis	Quote
Machining Costs If Required	$80.00/hr.
Masonry	
Absorption Test, Brick	$65.00/ea.
Compression Test, Composite Prism	$185.00/ea.
Compression Test, Brick	$55.00/ea.
Compression Test, Blocks	$95.00/ea.
Compression Test, Cores (does not include Coring for samples)	$80.00/ea.
Compression Test, Grout / Mortar	$37.00/ea.
Masonry Block Conformance (Does not include shrinkage)	$480.00/ea.
LABORATORY FEE SCHEDULE (CONTINUED)	

FEE PROPOSAL/SCHEDULE

Modulus of Rupture, Brick	$55.00/ea.
Moisture as Received, Brick	$55.00/ea.
Saturation Coefficient Brick	$55.00/ea.
Unit Weight & Absorption, Block	$80.00/ea.
Efflorescence, Block or Brick Only	$80.00/ea.
Linear Shrinkage	$270.00/ea.
Masonry Core Shear Test	$130.00/ea.
Soils	
Soil Processing Fee (per sample)	$22.00/ea.
Chloride Content of Soil	$85.00/ea.
Consolidation (up to 9 loads)	$295.00/ea.
Direct Shear (undisturbed ring specimens)	$270.00/ea.
Direct Shear (remolded specimens)	$315.00/ea.
Expansion Index	$170.00/ea.
Proctor (per curve) - 4-inch mold	$210.00/ea.
Proctor (per curve) - 6-inch mold	$275.00/ea.
Rock Correction (if required)	$75.00/ea.
Moisture Content / Dry Density	$42.00/ea.
Organic Matter	$80.00/ea.
Plasticity Index/Liquid Limit (Atterberg Limit)	$160.00/ea.
R-value (minimum 3 points)	$340.00/ea.
Resistivity & pH of Soil	$180.00/ea.
Sand Equivalent	$100.00/ea.
Sieve Analysis	$135.00/ea.
Sieve Analysis, with Hydrometer	$270.00/ea.
No. 200 Mesh Wash Particle Size Gradation	$95.00/ea.
Sulfate Content of Soil	$85.00/ea.
Thermal Resistivity of Soil (including 1 proctor curve)	$1300.00/ea.
Concrete	
Compression Test, 4x8 Cylinder	$32.00/ea.
Compression Test, 6x12 Cylinder	$34.00/ea.
Compression Test Gunite / Shotcrete (3 Cores/Panel, Coring Included)	$420.00/ea.
Compression Test, Core (incl sample prep)	$80.00/ea.
Compression Test, Lightweight Concrete Fill	$53.00/ea.
Compression Test, Non-shrink Grout Cubes	$53.00/ea.
Concrete Flexural Test	$95.00/ea.
Concrete Mix Design (revision or review)	$375.00/ea.
Drying Shrinkage (3 specimens – 28 days)	$375.00/ea.
Modulus of Elasticity, Static	$270.00/ea.
Splitting Tensile Strength	$105.00/ea.
Thermal Resistivity Testing of Concrete / FTB	$485.00/ea.
Unit Weight, Lightweight Concrete Fill	$80.00/ea.

FEE PROPOSAL/SCHEDULE

Category 16

PACIFIC RESOURCES SERVICES

PACIFIC RESOURCES SERVICES LABOR RATES FROM 1/1/2022 THROUGH 12/31/2022 *		
Staff		**Hourly Rate**
Benjamin Ocasio	Lead Labor Compliance Analyst	$146.80
Open	Labor Compliance Analyst	$124.21
Monica Mendez	Lead Site Visits	$101.63
Morita Capili	Office Support	$79.05

*Rates will remain fixed during the duration of the agreement.

All hourly costs are fully burdened. There are no additional costs (such as mileage, communication, etc.) to our client.

EXHIBIT C

TASK ORDER NO. [NUMBER]

TO MASTER PROFESSIONAL SERVICES AGREEMENT (2022-###)

This Task Order No. **[###]** ("Task Order") is made and entered into by and between the City of South Pasadena, a municipal corporation ("City"), and [Consultant] ("Consultant").

RECITAL

A. City and Consultant entered into an agreement entitled Master On-Call Professional Services Agreement ("Agreement") dated **[DATE]** by which the Consultant agreed to perform **[SERVICE DESCRIPTION]** services in accordance with Task Orders issued by the City.

NOW, THEREFORE, THE PARTIES HEREBY AGREE AS FOLLOWS:

1. **INCORPORATION BY REFERENCE.** This Task Order hereby incorporates by reference all terms and conditions set forth in the Agreement.

2. **SCOPE OF TASK ORDER.** Consultant shall perform the following services in accordance with the terms and conditions of the Agreement:
   [INSERT DESCRIPTION OF SPECIFIC WORK HERE OR INCLUDE ATTACHMENT TO TASK ORDER]

3. **TASK ORDER ADMINISTRATOR.** Consultant shall designate a principal point of contact for this task order:
   [INSERT NAME AND CONTACT INFORMATION OF CONSULTANT TASK ORDER ADMINISTRATOR]

4. **SCHEDULE.** Consultant shall complete the Task Order by the date listed below, or, if specified, in accordance with the required schedule of milestones listed below:
   [INSERT COMPLETION DATE OR SCHEDULE OF MILESTONES AS ATTACHMENT]

5. **PAYMENT.** For services performed by Consultant in accordance with this Task Order, City will compensate Consultant in accordance with the terms and conditions of the Agreement based on the Fee Schedule set forth below. The total cost of this project is to be no more than **[MAXIMUM AMOUNT]**, based on the rates in the Fee Schedule set forth below, and the timing of such payment as stated in the Scope of Task Order.

6. **SIGNATURES.** The individuals executing this Task Order represent and warrant that they have the right, power, legal capacity, and authority to enter into and to execute this Task Order on behalf of the respective legal entities of the Consultant and the City.

IN WITNESS WHEREOF, the City and Consultant do hereby agree to the full performance of the terms set forth herein.

"City"
City of South Pasadena

By:_____
Signature

Printed:_____

Title:_____

Date:_____

"Consultant"
[COMPANY]

By:_____
Signature

Printed:_____

Title:_____

Date:_____

Approved as to form:

By:_____
Roxanne Diaz, City Attorney

Date:_____

City Council Agenda Report

ITEM NO. 9

DATE: June 18, 2025

FROM: Todd Hileman, City Manager

PREPARED BY: Michael Vartanians, Principal Engineer

SUBJECT: **CONSIDER APPROVAL OF A TASK ORDER WITH NV5 FOR FY 19-20 STREET IMPROVEMENT PROJECT CONSTRUCTION AND INSPECTION MANAGEMENT SERVICES**

Recommendation

It is recommended that the City Council approve the Task Order under a Master On-Call Professional Services Agreement with NV5,in the final form approved by the City Attorney, to provide project management, construction management, and inspection management services for the City's Fiscal Year 19-20 Street Improvement Project in the not-to-exceed amount of $273,680.00.

Executive Summary

The City's Fiscal Year (FY) 2025-2026 Capital Improvement Program (CIP) includes the construction of the FY 19-20 Street Improvement Project. This item proposes the approval of a task order with NV5 for professional services to manage construction and inspection of the Project.

Background

The City's Public Works Department is responsible for developing and implementing the City's Capital Improvement Program (CIP), including improvement and maintenance of the City's roadway and utility infrastructure. City Council has the option to award the FY 19-20 Street Improvement project construction contract as an action item on the June 18, 2025 agenda. To deliver this project city staff will need construction project management, construction management and construction inspection services.

Analysis

On July 27, 2022, the City Council authorized the approval of multiple Master Service Agreements with professional services consultants for Public Works related on-call assignments. NV5 is one of the consultants approved by the City Council, having submitted a proposal to provide construction management and inspection services. NV5 is well qualified to complete the scope of work required. NV5's scope of work, under this task order, includes providing project, construction, and inspection management professional services utilizing two dedicated staff, a Construction Inspector and a Construction Manager.

The Master Service Agreements for each on-call consultant includes 'Task Order' exhibits that are executed based on the specific scope for each specific task or project. To ensure that use of these on-call professional services follows City Council's adopted procurement policy, Task

Orders above the City Manager's spending authority, such as this item's proposed work, are brought to Council for approval.

Fiscal Impact
Funding for this task order will be available in the Fiscal Year 2025-2026 Budget under the Streets & Sidewalk Street Repavement & Repairs CIP Project, with $280,000 appropriated to CIP Account No. 400-9000-9008-9203-000. This account includes a $140,000 transfer from the Fund 104 Street Improvement Fund Account, a $140,000 transfer from Fund 500 Water Enterprise Fund Account.

Key Performance Indicators and Strategic Plan
This item is related to the street improvement goals in the City Council's 2025 compilation of priorities, number 2(a).

Commission Review and Recommendation
These proposed street improvements have been discussed at multiple meetings of the Mobility and Infrastructure Transportation Commission and the Public Works Commission throughout the development of the Project.

Public Notification
The public was made aware that this item was to be considered this evening by virtue of its inclusion on the legally publicly noticed agenda, posting of the same agenda and reports on the City's website.

Environmental Analysis
The Project to be awarded as part of the June 18th, 2025 City Council Meeting, is found to be categorically exempt from CEQA pursuant to Section 21084 of the Public Resources Code, in accordance with Article 19, Section 15301, Class (1) "existing facilities."

Attachment:
Attachment No. 1 - Proposed Task Order
Attachment No. 2 - Master On-Call Professional Services Agreement

TASK ORDER NO. [NV5R9266-002]

TO MASTER PROFESSIONAL SERVICES AGREEMENT (2024-206)

This Task Order No. **[NV5R9266-002]** ("Task Order") is made and entered into by and between the City of South Pasadena, a municipal corporation ("City"), and [NV5] ("Consultant").

RECITAL

A. City and Consultant entered into an agreement entitled Master On-Call Professional Services Agreement ("Agreement") dated **December 4, 2024** by which the Consultant agreed to perform **Construction Management Services and Inspection Services** in accordance with Task Orders issued by the City.

NOW, THEREFORE, THE PARTIES HEREBY AGREE AS FOLLOWS:

1. **INCORPORATION BY REFERENCE.** This Task Order hereby incorporates by reference all terms and conditions set forth in the Agreement.

2. **SCOPE OF TASK ORDER.** Consultant shall perform the following services in accordance with the terms and conditions of the Agreement:

   FY 19-20 Street Improvement Project, Construction, and Inspection Management Provide project management, construction management, and inspection management services for the City's FY 19-20 Street Improvement Project. The work for which Consultant shall provide these services consists of pavement rehabilitation and replacement of mains, valves, water services, meters, and other appurtenances. The project also includes repair of damaged PCC curb and gutter, sidewalks, and driveways at various locations within the project limits; sawcut, removal and disposal of existing asphalt roadway sections; removal of macadam and subgrade; cold milling of existing pavement; subgrade preparation and compaction; crushed miscellaneous base (CMB); asphalt concrete pavement; removal and reconstruction of damaged PCC curb and gutter, sidewalk, driveway approaches, and ADA curb ramps; utility adjustments; installation of new water meters, services, valves, and appurtenances; sewer line repairs; traffic signing; thermoplastic striping and pavement markings; traffic control; and all appurtenant work thereto necessary for the proper construction of the contemplated improvements, in accordance to Plans and Specifications. The impacted roadways include:

   • Arroyo Verde Road (Marmion Way to Monterey Road)
   • Glendon Way (Lyndon Street to Monterey Road)
   • Mill Road (Garfield Avenue to end of roadway)
   • Milan Avenue (Oak Street to Edgewood Drive)
   • Edgewood Drive (Milan Avenue to Wayne Avenue)
   • Pine Street (Meridian Avenue to Huntington Drive)

• Oneonta Knoll Street (Fremont Avenue to Primrose Avenue)
• Maple Street (Fremont Avenue to Primrose Avenue)
• Maple Street (Meridian Avenue to Huntington Drive).

Task 001 – Street Improvement Project, Construction, and Inspection Management

a. Provide project management services under the direction of the City's Director of Public Works/City Engineer. Provide services from a construction manager, including construction of streets, sidewalks, etc and related components.

b. Provide complete construction management, construction administration, inspection services and labor compliance for Street Improvement Projects, including but not limited to project scheduling, project controls, project management, collaboration and claims resolution, daily reports and capturing photos, Contractor's labor force compliance monitoring, inspection/monitoring of traffic control procedures and traffic control plan, conducting progress meetings and preparing meeting minutes, coordinating with agencies and stakeholders, monitoring the project schedule, verifying quantities, and assuring quality control, and site safety.

c. Maintain complete and accurate project records, including monthly progress pay estimates, daily construction reports, extra work reports, contract change orders, labor and equipment records, correspondence, personnel records, records verifying stormwater pollution prevention plan (SWPPP) compliance, processing submittals of requests for information (RFIs), weekly statement of working days, change orders, punch-lists, and as-builts.

d. Maintain compliance of project records in compliance with the Standard Specifications for Public Works, City standards and construction documents, safety-related activities, implementing security procedures, coordinating survey and materials testing, as well as processing control documents, submittals, RFIs, weekly statement of working days, change orders, work change directives, and compliance with NPDES and encroachment permit requirements, if required.

e. Attend pre-construction meetings, project progress meetings, and provide assistance in responding to all questions in timely manner. Assist City in conducting and coordinating field meetings with contractors and act as the City's liaison for coordination and communication with other agencies, engineers, architects, and community members as needed. Coordinate with design engineers and project managers on design issues encountered during construction.

f. Review contractor's submittals in accordance with the requirements of project specifications and the City's requirements prior to final approval. Review, negotiate, process and monitor contract change orders with the City's approval. Review extra work invoices. Review and respond to RFIs in a timely manner.

g. Develop solutions to problems identified in the field with City approval.

h. Maintain all records and meet reporting requirements.

i. Provide community outreach and public outreach services as required. Identify and issue notice to contractor of safety concerns and violations.

j. Provide project status and overall condition of construction projects, including cost, budget, and schedule.

k. Review and approve punch lists. Participate and assist in conducting final inspection, testing and release of facilities. Review and approve record drawings at project completion.

l. Assist in preparation of daily pay estimates in accordance with the inspection daily report, and assist in preparation of contractors monthly pay estimates.

m. Report all unresolved issues and potential claims to the City's representative in writing on a daily basis.

n. Provide inspection services, including construction inspection of streets and related components.

o. Review plans and specifications, and provide construction inspection / observations. Observe construction of improvements by contractors and make recommendations regarding completion and acceptance of the work. Provide construction observations associated with work performed by contractors on City parks, and related areas to ensure compliance with approved plans, specifications, permits, and City guidelines and standards.

p. Ensure that materials and completed work comply with plans, specifications, and design criteria.

q. Inspect improvements for compliance with approved plans.

r. Prepare general correspondence and daily construction inspection reports, and coordinate with developers, engineers, staff, and the public.

s. Consultant shall assist the City in the review and processing of the Contractor's required construction oversight documents and the required elements from Appendix V Metro Construction Management and Safety Coordination, including the Construction Work Plan (CWP), Right-of-Entry (ROE) Agreement, Readiness Review, Activation of the Work Permit, and Project closeout, amongst other things.

t. It should be noted that Metro's jurisdiction commences whenever the Contractor is within 100 feet of the tracks, but for this project, a barricaded track whenever we are within an area 6 feet from the tracks will be acceptable for Metro. Additionally, notification to Metro/SCRRA is required whenever the Contractor has equipment adjacent to the tracks that has the propensity to foul the tracks.

u. The Consultant shall make certain that all relevant staff have the required Metro/SCRRA training. While the Consultant is operating on behalf of the City, Consultant shall provide Construction Management and Inspection in accordance with the Metro Construction Agreement, and the City shall pay all fees directly to SCRRA.

3. **TASK ORDER ADMINISTRATOR.** Consultant shall designate a principal point of contact for this task order:

Luanne Bean, P.E.
Director of Program and Construction Management
NV5
163 Technology Drive, Suite 100
Irvine, CA 92618
Office Telephone: (949) 585-0477
Mobile Telephone: (951) 377-1566
Email: Luanne.Bean@nv5.com

4. **SCHEDULE.** Consultant shall complete the Task Order by the date listed below, or, if specified, in accordance with the required schedule of milestones listed below:

All scope items listed in this task order shall be completed as directed by the City Public Works Director.

5. **PAYMENT.** For services performed by Consultant in accordance with this Task Order, City will compensate Consultant in accordance with the terms and conditions of the Agreement based on the Fee Schedule set forth below. The total cost of this project is to be no more than **Two-Hundred and Seventy Three Thousand and Six Hundred and Eighty Dollars ($273,680)**, based on the rates in the Fee Schedule set forth below. Payments shall be made on an hourly basis, and shall be invoiced by the Consultant upon approval by the City, in accordance with the below costs.

Invoices shall be submitted electronically to PWAP@southpasadenaca.gov

Table 1: NV5 Tasks and Assigned Personnel with Hourly Rates ($ / hr)			
Task	**Sr. Construction Manager** **$ 185 / hr**	**Construction Inspector** **$ 159 / hr**	**Task Fee**
001.a-m	448 hrs $82,880	1,200 hrs $190,800	1,648 hours $273,680
Total	448 hours $82,880	1,200 hours $190,800	1,648 hours $273,680

6. **SIGNATURES.** The individuals executing this Task Order represent and warrant that they have the right, power, legal capacity, and authority to enter into and to execute this Task Order on behalf of the respective legal entities of the Consultant and the City.

IN WITNESS WHEREOF, the City and Consultant do hereby agree to the full performance of the terms set forth herein.

"City"	"Consultant"
City of South Pasadena	**NV5**
By:_____	By:_____
Signature	*Signature*
Printed:_____	Printed:_____
Title:_____	Title:_____
Date:_____	Date:_____

Attest:

By:_____
Hector Gomez, Chief City Clerk

Date:_____

Approved as to form:

By:_____
Roxanne Diaz, City Attorney

Date:_____

MASTER ON-CALL PROFESSIONAL SERVICES AGREEMENT FOR CONSULTANT SERVICES

(City of South Pasadena /NV5, Inc.)

1. IDENTIFICATION

This PROFESSIONAL SERVICES AGREEMENT ("Agreement") is entered into by and between the City of South Pasadena, a California municipal corporation ("City"), and **NV5, Inc.** ("Consultant").

2. RECITALS

2.1. City has determined that it requires the following professional services from a consultant:

- **Civil Design Engineering Services**
- **Structural Design Engineering Services**
- **Facility Design Engineering Services**
- **Public Works and Development Land Use, Subdivision Control, Map and Plan Check Services**
- **Traffic/Transportation Engineering Services**
- **Geographic Information Systems (GIS) Support Services**
- **Computer Aided Drafting (CAD) Design Services**
- **Surveying Services**
- **Environmental Consulting and Document Services**
- **Environmental Monitoring Services**
- **Sustainability, Electrical, Solar, and Energy Design and Assessment Services**
- **Construction Management Services**
- **Inspection Services**
- **Seismic and Structural Examination Services**
- **Material Testing and Geotechnical Engineering Services**
- **Stormwater, Flood Plain, and Hydrogeological Engineering Services**
- **Building and Facility Assessment Services**
- **Assessment District Services**

2.2. Consultant represents that it is fully qualified to perform such professional services by virtue of its experience and the training, education and expertise of its principals and employees. Consultant further represents that it is willing to accept responsibility for performing such services in accordance with the terms and conditions set forth in this Agreement.

2.3. Consultant represents that it has no known relationships with third parties, City Council members, or employees of City which would (1) present a conflict of interest with the rendering of services under this Agreement under Government Code Section 1090, the Political Reform Act (Government Code Section 81000 *et seq.*), or other applicable

law, (2) prevent Consultant from performing the terms of this Agreement, or (3) present a significant opportunity for the disclosure of confidential information.

NOW, THEREFORE, for and in consideration of the mutual covenants and conditions herein contained, City and Consultant agree as follows:

3. DEFINITIONS

3.1. "Scope of Services": Such professional services as are set forth in Exhibit A. Specific scope of work for specific project assignments shall be identified through executed Task Orders, which shall incorporate by reference the terms of this Master Agreement.

3.2. "Agreement Administrator": The Agreement Administrator for this project is **H. Ted Gerber, Public Works Director**. The Agreement Administrator shall be the principal point of contact at the City for this project. All services under this Agreement shall be performed at the request of the Agreement Administrator. The Agreement Administrator will establish the timetable for completion of services and any interim milestones. City reserves the right to change this designation upon written notice to Consultant

3.3. "Approved Fee Schedule": Consultant's compensation rates are set forth in the fee schedule attached hereto as Exhibit B and incorporated herein by this reference. This fee schedule shall remain in effect for the duration of this Agreement unless modified in writing by mutual agreement of the parties.

3.4. "Design Professional": A Design Professional is any individual satisfying one or more of the following: (1) licensed as an architect pursuant to Business and Professions Code 5500 et seq., (2) licensed as a landscape architect pursuant to Business and Professions Code 5615 et seq., (3) licensed as a professional land surveyor pursuant to Business and Professions Code 8700 et seq., or (4) registered as a professional engineer pursuant to Business and Professions Code 6700 et seq.

3.5. "Commencement Date": **December 4, 2024**.

3.6. "Termination Date": **June 30, 2025**.

4. TERM

The term of this Agreement shall commence at 12:00 a.m. on the Commencement Date and shall expire at 11:59 p.m. on the Termination Date unless extended by written agreement of the parties or terminated earlier under Section 18 ("Termination") below. Consultant may request extensions of time to perform the services required hereunder. Such extensions shall be effective if authorized in advance by City in writing and incorporated in written amendments to this Agreement.

5. IDENTIFICATION OF PROJECTS

5.1. When City determines a need exists for any of the services specified in Exhibit A to this Agreement, City and Consultant may execute a "Task Order" detailing the specific services needed, the applicable fees therefor in accordance with Exhibit B to this Agreement, and the time for completion of such services by Consultant. Each Task Order shall incorporate by reference the terms of this Agreement and shall be sequentially-identified. Consultant shall only perform services under this Agreement and be paid for work performed pursuant to a Task Order approved and executed by the City.

6. CONSULTANT'S DUTIES

6.1. **Services**. Consultant shall perform the services identified in the Task Order. City shall have the right to request, in writing, changes to the Task Order. Any such changes mutually agreed upon by the parties, and any corresponding increase or decrease in compensation, shall be incorporated by written amendment to the Task Order or this Agreement.

6.2. **Coordination with City**. In performing services under this Agreement, Consultant shall coordinate all contact with City through its Agreement Administrator.

6.3. **Budgetary Notification**. Consultant shall notify the Agreement Administrator, in writing, when fees and expenses incurred under this Agreement have reached eighty percent (80%) of the Maximum Amount. Consultant shall concurrently inform the Agreement Administrator, in writing, of Consultant's estimate of total expenditures required to complete its current assignments before proceeding, when the remaining work on such assignments would exceed the Maximum Amount.

6.4. **Business License.** Consultant shall obtain and maintain in force a City business license for the duration of this Agreement.

6.5. **Professional Standards.** Consultant shall perform all work to the standards of Consultant's profession and in a manner reasonably satisfactory to City. Consultant shall keep itself fully informed of and in compliance with all local, state, and federal laws, rules, and regulations in any manner affecting the performance of this Agreement, including all Cal/OSHA requirements, the conflict of interest provisions of Government Code § 1090 and the Political Reform Act (Government Code § 81000 et seq.).

6.6. **Avoid Conflicts.** During the term of this Agreement, Consultant shall not perform any work for another person or entity for whom Consultant was not working at the Commencement Date if such work would present a conflict interfering with performance under this Agreement. However, City may consent in writing to Consultant's performance of such work.

6.7. **Appropriate Personnel.** Consultant has, or will secure at its own expense, all personnel required to perform the services identified in the Task Order. All such services shall be performed by Consultant or under its supervision, and all personnel engaged in the work shall be qualified to perform such services. **David Niknafs** shall be Consultant's project administrator and shall have direct responsibility for management of Consultant's performance under this Agreement. No change shall be made in Consultant's project administrator without City's prior written consent.

6.8. **Substitution of Personnel.** Any persons named in the proposal or Task Order constitutes a promise to the City that those persons will perform and coordinate their respective services under this Agreement. Should one or more of such personnel become unavailable, Consultant may substitute other personnel of at least equal competence upon written approval of City. If City and Consultant cannot agree as to the substitution of key personnel, City may terminate this Agreement for cause.

6.9. **Unauthorized Delay.** Consultant shall complete all services associated with the Task Order within the time period specified therein, or within seven (7) work days after execution thereof if no time is specified, as directed by the Agreement Administrator.

6.10. **Unforeseeable Delay.** Consultant shall not be deemed in breach of this Agreement or any Task Order, and no forfeiture due to delay shall be made, because of any delays in the completion of a Task Order due to unforeseeable causes beyond the control and without the fault or negligence of Consultant provided Consultant requests from the Agreement Administrator an extension of time in writing. Unforeseeable causes of delay beyond the control of Consultant shall include acts of God, acts of a public enemy, acts of the government, acts of City, or acts of another consultant or contractor in the performance of a contract with City, fires, floods, epidemics, quarantine restrictions, strikes, freight embargoes, and weather, or delays of sub-consultants due to such causes, or delays caused by failure of the owner of a utility to provide for removal or relocation of existing utility facilities. Delays caused by actions or negligence of Consultant or its agents, servants, employees, officers, sub-consultants, directors, or of any party contracting to perform part of all of the Scope of Services or to supply any equipment or materials shall not be unforeseeable delays. Unforeseeable delays (those beyond Consultant's control) shall not entitle Consultant to any additional compensation beyond the Maximum Amount. The sole recourse of Consultant shall be to seek an extension of time from the Agreement Administrator.

6.11. **Defective Work.** All work which is defective in its construction or deficient in any of the requirements set by City Reference Specifications shall be remedied or replaced by Consultant in an acceptable manner at its own expense. Defective work shall not entitle Consultant to any additional compensation beyond the Maximum Amount.

6.12. **Permits and Approvals.** Consultant shall obtain, at its sole cost and expense, all permits and regulatory approvals necessary for Consultant's performance of this Agreement. This includes, but shall not be limited to, professional licenses, encroachment permits and building and safety permits and inspections.

6.13. **Notification of Organizational Changes.** Consultant shall notify the Agreement Administrator, in writing, of any change in name, ownership or control of Consultant's firm or of any sub-consultant. Change of ownership or control of Consultant's firm may require an amendment to this Agreement.

6.14. **Records.** Consultant shall maintain any and all ledgers, books of account, invoices, vouchers, canceled checks, and other records or documents evidencing or relating to charges for services or expenditures and disbursements charged to City under this Agreement for a minimum of three (3) years, or for any longer period required by law, from the date of final payment to Consultant under this Agreement. All such documents shall be made available for inspection, audit, and/or copying at any time during regular business hours, upon oral or written request of City. In addition, pursuant to Government Code Section 8546.7, if the amount of public funds expended under this Agreement exceeds ten thousand dollars, all such documents and this Agreement shall be -ject to the examination and audit of the State Auditor, at the request of City or as part of any audit of City, for a period of three (3) years after final payment under this Agreement.

7. SUBCONTRACTING

7.1. **General Prohibition.** This Agreement covers professional services of a specific and unique nature. Except as otherwise provided herein, Consultant shall not assign or transfer its interest in this Agreement or subcontract any services to be performed without amending this Agreement.

7.2. **Consultant Responsible.** Consultant shall be responsible to City for all services to be performed under this Agreement.

7.3. **Subcontracting.** Consultant shall not subcontract any portion of the performance contemplated and provided for herein including any Task Order unless (1) such subcontracting is specifically described in the proposal attached hereto or (2) the City provides prior written approval. In any event, Consultant shall supervise all work subcontracted by Consultant in performing the Services and shall be responsible for all work performed by a sub-consultant as if Consultant itself had performed such work. The subcontracting of any work shall not relieve Consultant from any of its obligations under this Agreement with respect to any Task Order. Consultant is obligated to ensure that any and all sub-consultants performing any services shall be fully insured in all respects and to the same extent as set forth under Section 13, to City's satisfaction.

7.4. **Identification in Fee Schedule.** All sub-consultants shall be specifically listed and their billing rates identified in the Approved Fee Schedule, Exhibit B. Any changes must be approved by the Agreement Administrator in writing as an amendment to this Agreement.

7.5. **Compensation for Sub-consultants.** City shall pay Consultant for work performed by its sub-consultants, if any, only at Consultant's actual cost plus an approved mark-up as set forth in the Approved Fee Schedule, Exhibit B. Consultant shall be liable and accountable for any and all payments, compensation, and federal and state taxes to all sub-consultants performing services under this Agreement. City shall not be liable for any payment, compensation, or federal and state taxes for any sub-consultants.

8. COMPENSATION

8.1. **General.** City agrees to compensate Consultant for the services provided under this Agreement, and Consultant agrees to accept payment in accordance with the Fee Schedule in full satisfaction for such services. Compensation shall not exceed the Maximum Amount stated in the specific Task Order issued for performance of work. Consultant shall not be reimbursed for any expenses unless provided for in this Agreement or authorized in writing in the Task Order. Task Orders over $25,000 shall not be effective unless approved by the City Council.

8.2. **Invoices.** Consultant shall submit to City an invoice, on a monthly basis or as otherwise agreed to by the Agreement Administrator, for services performed pursuant to this Agreement. Each invoice shall identify the Maximum Amount, the services rendered during the billing period, the amount due for the invoice, and the total amount previously invoiced. All labor charges shall be itemized by employee name and classification/position with the firm, the corresponding hourly rate, the hours worked, a description of each labor charge, and the total amount due for labor charges.

8.3. **Taxes.** City shall not withhold applicable taxes or other payroll deductions from payments made to Consultant except as otherwise required by law. Consultant shall be solely responsible for calculating, withholding, and paying all taxes.

8.4. **Disputes.** The parties agree to meet and confer at mutually agreeable times to resolve any disputed amounts contained in an invoice submitted by Consultant.

8.5. **Additional Work.** Consultant shall not be reimbursed for any expenses incurred for work performed outside the Task Order unless prior written approval is given by the City on a time-and-materials basis pursuant to a new or amended Task Order. Consultant shall not undertake any such work without prior written approval of the City. A new or amended Task Order shall be in accordance with the fees identified in Exhibit B to this Agreement.

8.6. **City Satisfaction as Precondition to Payment.** Notwithstanding any other terms of this Agreement, no payments shall be made to Consultant until City is satisfied that the services are satisfactory.

8.7. **Right to Withhold Payments.** If Consultant fails to provide a deposit or promptly satisfy an indemnity obligation described in Section 11, City shall have the right to withhold payments under this Agreement to offset that amount.

9. PREVAILING WAGES

Consultant is aware of the requirements of California Labor Code Section 1720, et seq., and 1770, et seq., as well as California Code of Regulations, Title 8, Section 16000, et seq., ("Prevailing Wage Laws"), which require the payment of prevailing wage rates and the performance of other requirements on certain "public works" and "maintenance" projects. Consultant shall defend, indemnify, and hold the City, tis elected officials, officers, employees, and agents free and harmless form any claim or liability arising out of any failure or alleged failure of Consultant to comply with the Prevailing Wage Laws.

10. OWNERSHIP OF WRITTEN PRODUCTS

All reports, documents or other written material, and all electronic files, including computer-aided design files, developed by Consultant in the performance of this Agreement (such written material and electronic files are collectively known as "written products") shall be and remain the property of City without restriction or limitation upon its use or dissemination by City except as provided by law. Consultant may take and retain copies of such written products as desired, but no such written products shall be the subject of a copyright application by Consultant.

11. RELATIONSHIP OF PARTIES

11.1. **General.** Consultant is, and shall at all times remain as to City, a wholly independent contractor.

11.2. **No Agent Authority.** Consultant shall have no power to incur any debt, obligation, or liability on behalf of City or otherwise to act on behalf of City as an agent. Neither City nor any of its agents shall have control over the conduct of Consultant or any of Consultant's employees, except as set forth in this Agreement. Consultant shall not represent that it is, or that any of its agents or employees are, in any manner employees of City.

11.3. **Independent Contractor Status.** Under no circumstances shall Consultant or its employees look to the City as an employer. Consultant shall not be entitled to any benefits. City makes no representation as to the effect of this independent contractor relationship on Consultant's previously earned California Public Employees Retirement System ("CalPERS") retirement benefits, if any, and Consultant specifically assumes the responsibility for making such a determination. Consultant shall be responsible for all reports and obligations including, but not limited to: social security taxes, income tax withholding, unemployment insurance, disability insurance, and workers' compensation, and other applicable federal and state taxes.

11.4. **Indemnification of CalPERS Determination.** In the event that Consultant or any employee, agent, or subcontractor of Consultant providing services under this Agreement claims or is determined by a court of competent jurisdiction or CalPERS to

be eligible for enrollment in CalPERS as an employee of the City, Consultant shall indemnify, defend, and hold harmless City for the payment of any employee and/or employer contributions for CalPERS benefits on behalf of Consultant or its employees, agents, or subcontractor, as well as for the payment of any penalties and interest on such contributions, which would otherwise be the responsibility of City.

12. INDEMNIFICATION

12.1. **Definitions.** For purposes of this Section 11, "Consultant" shall include Consultant, its officers, employees, servants, agents, or sub-consultants, or anyone directly or indirectly employed by either Consultant or its sub-consultants, in the performance of this Agreement. "City" shall include City, its officers, agents, employees and volunteers.

12.2. **Consultant to Indemnify City.** To the fullest extent permitted by law, Consultant shall indemnify, hold harmless, and defend City from and against any and all claims, losses, costs or expenses for any personal injury or property damage arising out of or in connection with Consultant's alleged negligence, recklessness or willful misconduct or other wrongful acts, errors or omissions of Consultant or failure to comply with any provision in this Agreement.

12.3. **Scope of Indemnity.** Personal injury shall include injury or damage due to death or injury to any person, whether physical, emotional, consequential or otherwise, Property damage shall include injury to any personal or real property. Consultant shall not be required to indemnify City for such loss or damage as is caused by the sole active negligence or willful misconduct of the City.

12.4. **Attorneys Fees.** Such costs and expenses shall include reasonable attorneys' fees for counsel of City's choice, expert fees and all other costs and fees of litigation. Consultant shall not be entitled to any refund of attorneys' fees, defense costs or expenses in the event that it is adjudicated to have been non-negligent.

12.5. **Defense Deposit.** The City may request a deposit for defense costs from Consultant with respect to a claim. If the City requests a defense deposit, Consultant shall provide it within 15 days of the request.

12.6. **Waiver of Statutory Immunity.** The obligations of Consultant under this Section 11 are not limited by the provisions of any workers' compensation act or similar act. Consultant expressly waives its statutory immunity under such statutes or laws as to City.

12.7. **Indemnification by Subcontractors.** Consultant agrees to obtain executed indemnity agreements with provisions identical to those set forth here in this Section 11 from each and every subcontractor or any other person or entity involved in the performance of this Agreement on Consultant's behalf.

12.8. **Insurance Not a Substitute.** City does not waive any indemnity rights by accepting any insurance policy or certificate required pursuant to this Agreement. Consultant's indemnification obligations apply regardless of whether or not any insurance policies are determined to be applicable to the claim, demand, damage, liability, loss, cost or expense.

12.9. **Civil Code.** For Design Professionals, the parties are aware of the provisions of Civil Code 2782.8 relating to the indemnification and the duty and the cost to defend a public agency by a Design Professional and agree that this Section 12 complies therewith.

13. INSURANCE

13.1. **Insurance Required.** Consultant shall maintain insurance as described in this section and shall require all of its subcontractors, sub-consultants, and other agents to do the same. Approval of the insurance by the City shall not relieve or decrease any liability of Consultant Any requirement for insurance to be maintained after completion of the work shall survive this Agreement.

13.2. **Documentation of Insurance.** City will not execute this agreement until it has received a complete set of all required documentation of insurance coverage. However, failure to obtain the required documents prior to the work beginning shall not waive the Consultant's obligation to provide them. Consultant shall file with City:

- Certificate of Insurance, indicating companies acceptable to City, with a Best's Rating of no less than A:VII showing. The Certificate of Insurance must include reference to the scope of work and this Master Agreement.
- Documentation of Best's rating acceptable to the City.
- Original endorsements effecting coverage for all policies required by this Agreement.
- City reserves the right to obtain a full certified copy of any Insurance policy and endorsements. Failure to exercise this right shall not constitute a waiver of the right to exercise later.

13.3. **Coverage Amounts.** Insurance coverage shall be at least in the following minimum amounts:

• Professional Liability Insurance:	$2,000,000 per occurrence, $2,000,000 aggregate
• General Liability:	
• General Aggregate:	$2,000,000
• Products Comp/Op Aggregate	$2,000,000
• Personal & Advertising Injury	$2,000,000
• Each Occurrence	$2,000,000
• Fire Damage (any one fire)	$ 100,000
• Medical Expense (any 1 person)	$ 10,000

- Workers' Compensation:
  - Workers' Compensation — Statutory Limits
  - EL Each Accident — $1,000,000
  - EL Disease - Policy Limit — $1,000,000
  - EL Disease - Each Employee — $1,000,000

- Automobile Liability
  - Any vehicle, combined single limit — $1,000,000

Any available insurance proceeds broader than or in excess of the specified minimum insurance coverage requirements or limits shall be available to the City as additional insured. Furthermore, the requirements for coverage and limits shall be the greater of (1) the minimum coverage and limits specified in this Agreement, or (2) the broader coverage and maximum limits of coverage of any insurance policy or proceeds available to the named insured.

13.4. **General Liability Insurance.** Commercial General Liability Insurance shall be no less broad than ISO form CG 00 01. Coverage must be on a standard Occurrence form. Claims-Made, modified, limited or restricted Occurrence forms are not acceptable.

13.5. **Worker's Compensation Insurance.** Consultant is aware of the provisions of Section 3700 of the Labor Code which requires every employer to carry Workers' Compensation (or to undertake equivalent self-insurance), and Consultant will comply with such provisions before commencing the performance of the work of this Agreement. If such insurance is underwritten by any agency other than the State Compensation Fund, such agency shall be a company authorized to do business in the State of California.

13.6. **Automobile Liability Insurance.** Covered vehicles shall include owned if any, non-owned, and hired automobiles and, trucks.

13.7. P**rofessional Liability Insurance or Errors & Omissions Coverage.** If the Consultant is performing any surveying, engineering, architectural, or other design work for the project, Consultant shall provide proof of Professional Liability insurance in the amounts described above. The deductible or self-insured retention may not exceed $50,000, unless written approval is granted by the City for another amount. If the insurance is on a Claims-Made basis, the retroactive date shall be no later than the commencement of the work. Coverage shall be continued for two years after the completion of the work by one of the following: (1) renewal of the existing policy; (2) an extended reporting period endorsement; or (3) replacement insurance with a retroactive date no later than the commencement of the work under this Agreement.

13.8. **Claims-Made Policies.** If any of the required policies provide coverage on a claims-made basis the Retroactive Date must be shown and must be before the date of the contract or the beginning of contract work. Claims-Made Insurance must be maintained and evidence of insurance must be provided for at least five (5) years after completion

of the contract of work. If coverage is canceled or non-renewed, and not replaced with another claims-made policy form with a Retroactive Date prior to the contract effective date, the Consultant must purchase "extended reporting" coverage for a minimum of five (5) years after completion of contract work.

13.9. **Additional Insured Endorsements.** The City, its City Council, Commissions, officers, and employees of South Pasadena must be endorsed as an additional insured for each policy required herein, other than Professional Errors and Omissions and Worker's Compensation, for liability arising out of ongoing and completed operations by or on behalf of the Consultant. Consultant's insurance policies shall be primary as respects any claims related to or as the result of the Consultant's work. Any insurance, pooled coverage or self-insurance maintained by the City, its elected or appointed officials, directors, officers, agents, employees, volunteers, or consultants shall be non-contributory. All endorsements shall be signed by a person authorized by the insurer to bind coverage on its behalf. General liability coverage can be provided using an endorsement to the Consultant's insurance at least as broad as ISO Form CG 20 10 11 85 or both CG 20 10 and CG 20 37.

13.10. **Failure to Maintain Coverage.** In the event any policy is canceled prior to the completion of the project and the Consultant does not furnish a new certificate of insurance prior to cancellation, City has the right, but not the duty, to obtain the required insurance and deduct the premium(s) from any amounts due the Consultant under this Agreement. Failure of the Consultant to maintain the insurance required by this Agreement, or to comply with any of the requirements of this section, shall constitute a material breach of this Agreement.

13.11. **Notices.** Consultant shall provide immediate written notice if (1) any of the required insurance policies is terminated; (2) the limits of any of the required policies are reduced; (3) or the deductible or self-insured retention is increased. Consultant shall provide no less than 30 days' notice of any cancellation or material change to policies required by this Agreement. Consultant shall provide proof that cancelled or expired policies of insurance have been renewed or replaced with other policies providing at least the same coverage. Such proof will be furnished at least two weeks prior to the expiration of the coverages. The name and address for Additional Insured Endorsements, Certificates of Insurance and Notices of Cancellation is: City of South Pasadena, Attn: Risk Management, 1414 Mission Street, South Pasadena, CA 91030. Phone: (626) 403-7230.

13.12. **Consultant's Insurance Primary.** The insurance provided by Consultant, including all endorsements, shall be primary to any coverage available to City. Any insurance or self-insurance maintained by City and/or its officers, employees, agents or volunteers, shall be in excess of Consultant's insurance and shall not contribute with it.

13.13. **Waiver of Subrogation.** Consultant hereby waives all rights of subrogation against the City. Consultant shall additionally waive such rights either by endorsement to each policy or provide proof of such waiver in the policy itself.

13.14. **Report of Claims to City.** Consultant shall report to the City, in addition to the Consultant's insurer, any and all insurance claims submitted to Consultant's insurer in connection with the services under this Agreement.

13.15. **Premium Payments and Deductibles.** Consultant must disclose all deductibles and self-insured retention amounts to the City. The City may require the Consultant to provide proof of ability to pay losses and related investigations, claim administration, and defense expenses within retention amounts. Ultimately, City must approve all such amounts prior to execution of this Agreement.

City has no obligation to pay any premiums, assessments, or deductibles under any policy required in this Agreement. Consultant shall be responsible for all premiums and deductibles in all of Consultant's insurance policies. The amount of deductibles for insurance coverage required herein are subject to City's approval.

13.16. **Duty to Defend and Indemnify.** Consultant's duties to defend and indemnify City under this Agreement shall not be limited by the foregoing insurance requirements and shall survive the expiration of this Agreement.

14. MUTUAL COOPERATION

14.1. **City Cooperation in Performance.** City shall provide Consultant with all pertinent data, documents and other requested information as is reasonably available for the proper performance of Consultant's services under this Agreement.

14.2. **Consultant Cooperation in Defense of Claims.** If any claim or action is brought against City relating to Consultant's performance in connection with this Agreement, Consultant shall render any reasonable assistance that City may require in the defense of that claim or action.

15. NOTICES

Any notices, bills, invoices, or reports required by this Agreement shall be deemed received on: (i) the day of delivery if delivered by hand, facsimile or overnight courier service during Consultant's and City's regular business hours; or (ii) on the third business day following deposit in the United States mail if delivered by mail, postage prepaid, to the addresses listed below (or to such other addresses as the parties may, from time to time, designate in writing).

If to City	If to Consultant
H. Ted Gerber	David Niknafs, PE
City of South Pasadena	NV5, Inc.

1414 Mission Street
South Pasadena, CA 91030
Telephone: (626) 403-7240
Facsimile: (626) 403-7241

163 Technology Drive Suite 100
Irvine, CA 92618
Telephone: (949) 585-0477
Facsimile:

With courtesy copy to:

Roxanne Diaz, Esq.
South Pasadena City Attorney
Richards, Watson & Gershon
350 South Grand Avenue, 37th Floor
Los Angeles, California 90071
Telephone: (213) 626-8484
Facsimile: (213) 626-0078

16. SURVIVING COVENANTS

The parties agree that the covenants contained in paragraph 5.11 (Records), paragraph 10.4 (Indemnification of CalPERS Determination), Section 11 (Indemnity), paragraph 12.8 (Claims-Made Policies), paragraph 13.2 (Consultant Cooperation in Defense of Claims), and paragraph 18.1 (Confidentiality) of this Agreement shall survive the expiration or termination of this Agreement, subject to the provisions and limitations of this Agreement and all otherwise applicable statutes of limitations and repose.

17. TERMINATION

17.1. **City Termination.** City may terminate this Agreement for any reason on five calendar days' written notice to Consultant. Consultant agrees to cease all work under this Agreement on or before the effective date of any notice of termination. All City data, documents, objects, materials or other tangible things shall be returned to City upon the termination or expiration of this Agreement.

17.2. **Consultant Termination.** Consultant may terminate this Agreement for a material breach of this Agreement upon 30 days' notice.

17.3. **Compensation Following Termination.** Upon termination, Consultant shall be paid based on the work satisfactorily performed at the time of termination. In no event shall Consultant be entitled to receive more than the amount that would be paid to Consultant for the full performance of the services required by this Agreement. The City shall have the benefit of such work as may have been completed up to the time of such termination.

17.4. **Remedies.** City retains any and all available legal and equitable remedies for Consultant's breach of this Agreement.

18. INTERPRETATION OF AGREEMENT

18.1. **Governing Law.** This Agreement shall be governed and construed in accordance with the laws of the State of California.

18.2. **Integration of Exhibits.** All documents referenced as exhibits in this Agreement are hereby incorporated into this Agreement. In the event of any material discrepancy between the express provisions of this Agreement and the provisions of any document incorporated herein by reference, the provisions of this Agreement shall prevail. This instrument contains the entire Agreement between City and Consultant with respect to the transactions contemplated herein. No other prior oral or written agreements are binding upon the parties. Amendments hereto or deviations herefrom shall be effective and binding only if made in writing and executed on by City and Consultant.

18.3. **Headings.** The headings and captions appearing at the commencement of the sections hereof, and in any paragraph thereof, are descriptive only and for convenience in reference to this Agreement. Should there be any conflict between such heading, and the section or paragraph thereof at the head of which it appears, the language of the section or paragraph shall control and govern in the construction of this Agreement.

18.4. **Pronouns.** Masculine or feminine pronouns shall be substituted for the neuter form and vice versa, and the plural shall be substituted for the singular form and vice versa, in any place or places herein in which the context requires such substitution(s).

18.5. **Severability.** If any term or provision of this Agreement or the application thereof to any person or circumstance shall, to any extent, be invalid or unenforceable, then such term or provision shall be amended to, and solely to the extent necessary to, cure such invalidity or unenforceability, and shall be enforceable in its amended form. In such event, the remainder of this Agreement, or the application of such term or provision to persons or circumstances other than those as to which it is held invalid or unenforceable, shall not be affected, and each term and provision of this Agreement shall be valid and be enforced to the fullest extent permitted by law.

18.6. **No Presumption Against Drafter.** Each party had an opportunity to consult with an attorney in reviewing and drafting this agreement. Any uncertainty or ambiguity shall not be construed for or against any party based on attribution of drafting to any party.

19. GENERAL PROVISIONS

19.1. **Confidentiality.** All data, documents, discussion, or other information developed or received by Consultant for performance of this Agreement are deemed confidential and Consultant shall not disclose it without prior written consent by City. City shall grant such consent if disclosure is legally required. All City data shall be returned to City upon the termination or expiration of this Agreement.

19.2. **Conflicts of Interest.** Consultant maintains and warrants that it has not employed nor retained any company or person, other than a bona fide employee working solely for Consultant, to solicit or secure this Agreement. Further, Consultant warrants that it has not paid nor has it agreed to pay any company or person, other than a bona fide employee working solely for Consultant, any fee, commission, percentage, brokerage fee, gift or other consideration contingent upon or resulting from the award or making of this Agreement. Consultant further agrees to file, or shall cause its employees or sub-consultant to file, a Statement of Economic Interest with the City's Filing Officer if required under state law in the performance of the services. For breach or violation of this warranty, City shall have the right to rescind this Agreement without liability. For the term of this Agreement, no member, officer, or employee of City, during the term of his or her service with City, shall have any direct interest in this Agreement, or obtain any present or anticipated material benefit arising therefrom.

19.3. **Non-assignment.** Consultant shall not delegate, transfer, subcontract or assign its duties or rights hereunder, either in whole or in part, without City's prior written consent, and any attempt to do so shall be void and of no effect. City shall not be obligated or liable under this Agreement to any party other than Consultant.

19.4. **Binding on Successors.** This Agreement shall be binding on the successors and assigns of the parties.

19.5. **No Third-Party Beneficiaries.** Except as expressly stated herein, there is no intended third-party beneficiary of any right or obligation assumed by the parties.

19.6. **Time of the Essence.** Time is of the essence for each and every provision of this Agreement.

19.7. **Non-Discrimination.** Consultant shall not discriminate against any employee or applicant for employment because of race, sex (including pregnancy, childbirth, or related medical condition), creed, national origin, color, disability as defined by law, disabled veteran status, Vietnam veteran status, religion, age (40 and above), medical condition (cancer-related), marital status, ancestry, or sexual orientation. Employment actions to which this provision applies shall include, but not be limited to, the following: employment, upgrading, demotion, or transfer; recruitment or recruitment advertising; layoff or termination; rates of pay or other forms of compensation; or in terms, conditions or privileges of employment, and selection for training. Consultant agrees to post in conspicuous places, available to employees and applicants for employment, the provisions of this nondiscrimination clause.

19.8. **Waiver.** No provision, covenant, or condition of this Agreement shall be deemed to have been waived by City or Consultant unless in writing signed by one authorized to bind the party asserted to have consented to the waiver. The waiver by City or Consultant of any breach of any provision, covenant, or condition of this Agreement shall not be deemed to be a waiver of any subsequent breach of the same or any other provision, covenant, or condition.

19.9. **Excused Failure to Perform.** Consultant shall not be liable for any failure to perform if Consultant presents acceptable evidence, in City's sole judgment, that such failure was due to causes beyond the control and without the fault or negligence of Consultant.

19.10. **Remedies Non-Exclusive.** Each right, power and remedy provided for herein or now or hereafter existing at law, in equity, by statute, or otherwise shall be cumulative and shall be in addition to every other right, power, or remedy provided for herein or now or hereafter existing at law, in equity, by statute, or otherwise. The exercise, the commencement of the exercise, or the forbearance from the exercise by any party of any one or more of such rights, powers or remedies shall not preclude the simultaneous or later exercise by such party of any or all of such other rights, powers or remedies.

19.11. **Attorneys' Fees.** If legal action shall be necessary to enforce any term, covenant or condition contained in this Agreement, the prevailing party shall be entitled to an award of reasonable attorneys' fees and costs expended in the action.

19.12. **Venue.** The venue for any litigation shall be Los Angeles County, California and Consultant hereby consents to jurisdiction in Los Angeles County for purposes of resolving any dispute or enforcing any obligation arising under this Agreement.

TO EFFECTUATE THIS AGREEMENT, the parties have caused their duly authorized representatives to execute this Agreement on the dates set forth below.

"City"	"Consultant"
City of South Pasadena	**NV5, Inc.**
By:_____	By:_____
Signature	*Signature*
Printed:_____	Printed: Jeffrey M. Cooper
Title:_____	Title: EVP/COO

Date:_____ Date: 01/06/2025

Attest:

By:_____
Mark Perez, Deputy City Clerk

Date:_____

Approved as to form:

By:_____
Roxanne Diaz, City Attorney

Date:_____

EXHIBIT A

"Scope of Services"

Consultant: NV5, Inc.

Sub-Consultant: Pacific Resources Services (PRS)

Scope:

Civil Design Engineering Services

a. Perform civil engineering services signed and stamped by a registered Professional Civil Engineer in the State of California, for the stated services on an "on-call as needed" basis for various civil engineering projects in the public right-of-way such as street, water, sewer, storm drain, streetlight, buildings and facilities, parks or other projects as assigned by the City.
b. Perform design work for repair, rehabilitation, or other related street improvements, including plan preparation, geometric design, drainage design, pavement delineation, surveying, stormwater pollution prevention plan (SWPPP), and signage and striping plans for street, highways, minor structures, and other public infrastructure.
c. Provide design services for City projects to prepare plans and specifications for City projects, including but not limited to streets, buildings and facilities, trails, landscaping, park design, traffic signal installations or modifications, water systems, storm drain and sewer improvements, upgrades, modifications, extensions, repair or rehabilitation, and other related improvements.
d. Prepare project technical provisions and detailed cost estimates.
e. Provide engineering support services construction assistance.
f. See also: (5) Public Works and Development Land Use, Subdivision Control, Map and Plan Check Services, (6) Traffic/Transportation Engineering Services, (9) Computer Aided Drafting (CAD) Design Services, and (11) Program & Project Management Services.

Structural Design Engineering Services

a. Structural engineering design services include bridges, walls, storm drains, and other Public Works structural facilities, where seismic analysis, structural calculations, design, plan, evaluation of structural components and structural systems to ensure the safety and comfort of users or occupants is conducted.
b. Consultant must be registered in the State of California as a professional structural engineer for work requiring a structural engineer's seal, and provide experienced personnel, equipment and facilities to perform tasks. Civil

engineers registered in the State of California may perform structural engineering work allowed by the California Business and Professions Code.

c. Assess structural stability and load bearing capacity of existing structures including areas proposed to be modified or used for additional loads.
d. Provide structural design for new structures or modifications of existing structures.
e. Provide alternative structural layouts or options that can be applied to project requirements.
f. Provide technical memorandum on assessment of structures.
g. Provide complex structural analyses using computer programs for complex projects.
h. Provide technical specifications for selection of materials and methods.
i. Provide seismic and wind design review of existing structures.
j. Provide detail design of concrete slabs, retaining wall, foundations, floor plans, roofing and framing plans, and pipe and equipment support and anchorage, for operation, maintenance, and administrative facilities.
k. Participate in peer review and value engineering of structural design completed by other consultants.
l. Prepare construction cost estimates.
m. Provide structural engineering support during bidding and construction of projects.
n. Provide record drawings.
o. See also: (19) Seismic and Structural Examination Services.

Facility Design Engineering Services

a. Perform mechanical, electrical, and plumbing engineering design services signed and stamped by a qualified registered Professional Engineer, including design for repair, remodeling, or upgrading City's facilities such as Library, Senior Center, Police Station, Fire Station, Recreation/Community Service Buildings, Corporate Yards, City Hall, Parks, or other facilities per City request in compliance with current applicable building codes:
    i. Mechanical engineering design services include HVAC system, heating, cooling, ventilation, smoke control and exhaust system.
    ii. Electrical engineering design services include solar power, power supplies, distribution, conduit/wiring, back-up generators, batteries, electric vehicle chargers, switches, transformers, appliances, lighting, fire alarms, signal systems, arc flash studies, electrical calculations for short circuits, voltage drop, etc.
    iii. Plumbing engineering design services include hot and cold water systems, water heaters, fire suppression systems, and wastewater systems.

b. Design services include: performing concept and feasibility studies of project alternatives; preparing preliminary design reports; preparing plans, specifications, estimates (opinions of construction cost) and other design related documents; providing drafting and computer aided drafting support; preparing and processing permit applications for building, various regulatory, and environmental permits.; performing record drawing, utility, or other searches; performing field investigations; performing engineering design services; reviewing and recommending award of construction contracts; utility coordination; providing design services during construction, including periodic site visits, review of shop drawings, and preparing responses to contractor's requests for information (RFIs), preparing record ("as built") drawings; and attending project or coordination meetings as necessary.

Public Works and Development Land Use, Subdivision Control, Map and Plan Check Services

a. Coordinate the intake and processing of development project plans, specifications, tentative maps, final maps, land use applications, and other development related submittals, and review for completeness.
b. Manage, coordinate, and schedule with City staff, consultants, utilities, and private and public entities to perform required reviews.
c. Review, assess, document, and organize all existing active development projects by location, project type, and project status.
d. Review, check and make recommendations regarding land use applications.
e. Perform review of parcel maps, tract maps, tentative maps, final maps, easements, lot line adjustments, and parcel mergers.
f. Perform review of studies and reports such as sewer, drainage, and Water Quality Management Plans (WQMP) utilizing commonly used software programs and Los Angeles County Hydrology and Local Drainage Manuals.
g. Perform mapping and prepare legal descriptions for right-of-way acquisitions, easements, and vacations.
h. Perform review of engineering quantity estimates and costs, rough and precise grading improvement plans, erosion control, geological and geotechnical reports, storm drain improvement plans, hydrology and hydraulics reports, landscape plans, federally and state mandated reports required under National Pollutant Discharge Elimination System (NPDES) and Air Quality Management District (AQMD) guidelines, utility plans, (including domestic and sanitary sewer improvements), street improvement plans, signing and striping plans, traffic signal plans, and traffic studies and reports.

i. Review tentative maps and other developments and provide recommendations related to engineering and water pollution reduction.
j. Review plans for consistency with other planned developments.
k. Prepare plan check comments in concise and understandable manner.
l. Recommend, draft, and issue conditions of approval and plan reviews for development, including off-site improvements and financial obligations.
m. Application of requirements related to the City's Southwest Monterey Hills Construction Regulations.
n. Establish bond amounts, determine financial obligations and other development fees within the proper sequence of development reviews;
o. Perform additional functions, including, but not limited to, the preparation of general correspondence and staff reports, and coordination with developers, engineers, staff, and the general public related to the engineering review of private developments.
p. Assist with development of engineering design standards and guidelines to assist with the plan checking process
q. Prepare Staff reports for City Council, and attend City Council and other city meetings as required.
r. Prepare and update policies and procedures for land development project reviews.
s. Provide public works and development land use, subdivision control, map and plan check services signing and stamping by a registered Professional Civil Engineer in the State of California.

Traffic/Transportation Engineering Services

a. Provide consulting services related to parking management, traffic counts, traffic modeling, signal timing, development and review of traffic studies, development and review of traffic impact analysis reports (utilizing City's traffic impact analysis methodology), and preparation of reports and/or scopes of work.
b. Provide consulting services related to development and review of level of service (LOS) analyses and vehicle miles traveled (VMT) analyses.
c. Provide consulting services related to engineering studies of traffic conditions, pedestrian characteristics, and physical characteristics related to the installation of a traffic control signals or other traffic/pedestrian devices.
d. Provide traffic engineering and transportation design support for the preparation of preliminary and final plans and specifications for all types of traffic and intelligent transportation system (ITS) projects, signed and stamped by a registered Professional Traffic Engineer or Civil Engineer in the State of California, including but not limited to: traffic signals (LED displays, mast

arm designs, etc.), vehicle detection system (video, loop, microwave, radar, ultrasonic, etc.), interconnect systems (hardware, phone, cellular phone, spread spectrum, radio, etc.), pavement markings (tape, thermoplastic, water based, etc.), sign and sign support systems (wood, metal and composite systems), intelligent transportation systems devices (variable message boards, closed circuit television, fiber optics and other communications media etc.), intersection designs (simple lane additions, signalizations, continuous flow intersections, diverging diamonds, and round-a-bouts), preliminary surveys for designs, sign layouts, guardrail designs, roadway re-striping and roadway design, calculation of quantities and estimates for plans, fiber optic networking drawings and fiber optics splicing plans, ITS Network plans for interconnection to Traffic Management Centers, and ITS Network Support Plans.

e. Prepare construction and maintenance related signing plans and schedules.
f. Conduct accident analyses needed for consideration of safety measures in the designs and planning of transportation projects.
g. Perform individual signal timing plans, corridor signal timing progression plans and optimization plans.
h. Provide miscellaneous services regarding traffic operations to assist with the City's day to day operations, including advisement and recommendations on traffic and transportation related matters.
i. Develop conceptual phased construction plans considering geometric design, capacity analysis, construction signing, temporary guide signing, temporary pavement markings, temporary signal design, and optimization of traffic flow.
j. Prepare freeway guide signing plans consistent with the Federal Highway Administration Manual on Uniform Traffic Control Devices (MUTCD) and the City's policies. Prepare sign bridge plans, specialized sign support details, sign plans and sign layouts.
k. Provide railroad crossing design and coordination services.
l. Provide technical assistance and reports related to traffic engineering and ITS issues, including assisting the City in procuring ITS telecommunications/network related hardware, software and pertinent materials.
m. Develop plans and specifications for City ITS and telecommunications/network related projects or tasks including developing network, software and hardware design and procurement, fiber assignments, fiber design and all pertinent studies, reports, drawings, diagrams, specifications, and manuals both in hard and electronic formats.
n. Provide corridor-planning analysis for future fiber optic backbone implementations including determining future node points for ITS elements,

number of fiber strands required for future implementations, and best practices to facilitate private/public partnerships to build the fiber backbone.

o. Train City personnel on use of specialized traffic, transportation engineering and telecommunications/network related software in addition to any training requested.
p. Provide structural inspection and report of Traffic Signal poles and mast arms, ITS structures and sign structures.
q. Provide construction management, inspection and completion of appropriate City documents as required, including ITS construction and field management.
r. Conduct traffic signal and traffic device needs studies and develop reports, related to speed, progression, congestion, incidents, removal of vehicles, etc.
s. Conduct vehicular and pedestrian/bicyclist traffic volume count studies and develop reports as needed for design and operations analysis.
t. Collect, analyze, and summarize transportation related field observations and data from reporting sources, including but not limited to City collision/incident data, California Statewide Integrated Traffic Records System (SWITRS), etc.
u. Conduct traffic signal warrant analyses and develop reports.
v. Provide technical support and training on various travel demand and traffic operations models including, but not limited to VISSIM, CORSIM, SYNCHRO, and HCS.
w. Provide Active Transportation Program consulting and design services that promote pedestrian, biking/cycling, and transit travel, placemaking, sustainability, community economic benefits, and promote healthy lifestyles.
x. Provide transportation modeling services, including level of service (LOS), vehicle miles traveled (VMT), and other progressive modeling techniques.
y. Provide consulting service on street and transportation design, transportation networks, placemaking, modeling, transit, and other transportation related concepts.
z. Provide traffic and transportation public engagement and outreach services. Attend meetings as instructed, prepare visual aids for meetings as needed, and prepare letters of correspondence and meeting minutes.

Geographic Information Systems (GIS) Support Services

a. Maintain and edit GIS datasets/layers.
b. Create new datasets and GIS maps.
c. Create, update, and print GIS maps
d. Assist City with in house production of map documents.
e. Advise the City on matters relating to GIS projects and software.
f. Maintain and keep records of GIS-related software and software licenses.

g. Create, customize, and maintain GIS related web pages.
h. Create, customize, and maintain databases.
i. Work with Los Angeles County to acquire GIS and Assessor updates.
j. Print large format maps.
k. Obtain GIS data as needed from other sources.
l. Provide customized solutions for special projects as requested.
m. Providing GIS technical assistance and training to staff.

Computer Aided Drafting (CAD) Design Services

a. Develop concept designs.
b. Prepare construction documents including plans, specifications, and estimates.
c. Assist with required state and federal documentation for design work associated with state or federal funded construction projects.
d. Provide plan check and/or peer review per City standard details and specifications.
e. Prepare project drawings in CAD.
f. Provide constructability reviews.
g. Provide construction services.
h. Anticipated project types include, but not limited: street improvement projects, bike and pedestrian facilities (bike lanes, pedestrian paths, multipurpose trails), preliminary engineering in support of grant applications, traffic related projects including traffic signal design, signage and marking, MUTCD compliance, street light design, drainage Improvement projects: alternate drainage, reclaimed water pipeline, recycled water related planning and design, etc., intersection modifications, and sidewalk improvement projects (ADA compliance).

Surveying Services

a. Perform surveys conforming to the requirements of the Land Surveyors Act and Caltrans Survey manual.
b. Provide design, construction, and as-built surveys, preparation of legal description and plat maps, monument preservation/recordation and other surveying services.
c. Establish horizontal and vertical control bases using benchmarks and datum that is common for Los Angeles County Cities.
d. Perform aerial photogrammetry.
e. Use aerial photogrammetry or field survey data to prepare base maps.
f. Prepare topographic maps with elevations contours and spot elevations shown.

g. Research and provide on maps and surveys street centerlines and right-of-way boundaries.
h. Survey and prepare plats and legal descriptions with sketches for easement and property acquisition and lot line adjustments.
i. Provide surveys to support geotechnical investigations, utility locating, and the design of water, reclaimed water, water reclamation, streets, site developments, and electrical systems.
j. Reset survey monuments disturbed or removed during construction and identify the hours separately on work performed.
k. Provide field staking and cut sheets for construction projects.

Environmental Consulting and Document Services

a. Provide consulting and document development services for environmental feasibility studies, CEQA & NEPA documents, development applications, mitigation monitoring preparation and compliance.
b. Provide agency coordination, team management, quality assurance reviews, and public engagement and outreach.
c. Provide complete environmental planning and document preparation in accordance with CEQA and NEPA requirements, special studies such as but not limited to noise, socioeconomic, biological, cultural, air quality, Phase I site assessments, hazardous waste, archaeological, historical, and tribal consultation, as needed on a project specific basis as required by the City and/or Caltrans. Typical project to include CIP projects, road widening, new construction, rehabilitation projects, storm drain, signal installations, reservoirs, booster stations, projects in Caltrans right-of-way, and water and sewer installations.
d. Provide environmental document development services including but not limited to preparation of: maps for environmental evaluation, public and agency scoping, noise studies, noise abatement reports, air quality studies and reports, initial site assessments, natural environmental study reports, cultural resource studies, potential effect identification reports, Native American consultation reports, visual/aesthetic evaluation reports, community impacts assessment reports, climate change analysis/assessment reports, cumulative impacts analysis reports, location hydraulic/flood plain reports, paleontology studies, draft environmental documents, responses to review comments, final environmental documents, and environmental commitments records.

Environmental Monitoring Services

a. Noise sampling collection;
b. Ambient air samples collection;
c. Storm water sampling and laboratory analysis;
d. Surface water sampling and laboratory analysis;
e. Groundwater sampling and laboratory analysis;
f. Potable water sampling and laboratory analysis;
g. Soil fertility, soil ecology, and flora ecology sampling and analysis; and
h. Preparation of reports describing in detail the sampling efforts, laboratory results, data, quality assurance/quality control, and results.

Sustainability, Electrical, Solar, and Energy Design and Assessment Services

a. Provide consulting services in energy conservation measures.
b. Provide consulting services on heating ventilation & air conditioning (HVAC) system optimization, retrofit, upgrade or replacement.
c. Provide consulting services on interior and exterior lighting retrofit or replacement.
d. Provide consulting services on outside, street, and area lighting retrofit or replacement.
e. Provide consulting services on open standards wireless platform and applications to control, dim, monitor, and help maintain street lighting LED retrofit investments, and enable a platform for future City applications such as parking, automated meter reading, charging stations, traffic, etc.
f. Provide consulting services Building Automation System (BAS) installation, upgrade, or expansion leveraging existing technology.
g. Provide consulting services building envelope upgrades.
h. Provide consulting services infrastructure improvements that reduce energy and/or reduce operating costs.
i. Provide consulting services on project, design, installation, purchase, and construction financing sources and solutions.

j. Provide consulting services on electrical vehicle (EV) and EV charging solutions, including, but not limited to, use and site assessment, rebate and financial planning, owner agreements, EV purchase and use, EV supply equipment (EVSE) purchase and installation.
k. Provide consulting services on EV charging infrastructure design, equipment selection, installation, construction, operation, maintenance, network infrastructure, equipment applications, mobile applications, payment

gateways, administration, power management, energy rate requirements and selection, station management, customer management, site management, driver management, radio-frequency identification (RFID) fob management, access control roles, pricing management, and EV fleet management.

l. Analyze energy interval data, examine load profiles and seasonal variations to identify potential storage capacity and energy values.
m. Analyze potential load impacts from EV charging, and provide recommendations.
n. Develop solar modeling and rendering using a software (e.g. Helioscope), and build energy model to test and evaluate scenarios, pricing, storage amounts, and rate options.
o. Provide site assessment services verifying solar array, meter, and backup battery storage locations, assessing shading construction impacts, switchgear and other solar, electrical and/or battery backup equipment.
p. Provide other training, remote monitoring services, or other related support services.
q. Perform comprehensive investment-grade audits of City facilities and infrastructure, identifying and analyzing all opportunities for water and energy cost savings, including, but not limited to, buildings, parks, water facilities, and city-owned streetlights.
r. Perform comprehensive feasibility analyses of distributed generation opportunities for City facilities, including solar photovoltaics (PV) and solar arrays, and any other economically and environmentally viable distributed generation (DG) solutions.
s. Analyze and report on energy efficiency (electricity and natural gas) and water usage at all City facilities, providing an analysis of building systems, equipment, operations, and operational procedures for optimal performance, include the following thorough assessments: existing equipment; equipment replacement, repair, or rehabilitation; potential alternative processes; proposed energy and water efficiency and conservation projects; equipment controls; lighting (internal/external for buildings/parks and remaining non-LED street lights); HVAC equipment; well equipment; automation; space utilization and programming; pumps; non-computerized irrigation systems controllers; building envelope performance with evaluation for cooling/heat gain or loss, transmission and leakage, and solar potential, alternative fuel sources, and identifying facility or occupancy changes that could affect energy/water use.
t. Review historical data of existing energy usage, meet with the facilities' staff, tour the facilities, and identify all major lighting, HVAC equipment and systems, determining occupancy schedules, energy use patterns, etc.

u. Prepare reports, present findings and address questions for City and at public meetings.

Construction Management, Administration, and Monitoring Services

a. Provide services from a construction manager with a minimum of five (5) years of experience managing public works construction and private construction, including construction of streets, sidewalks, curb and gutter, underground and aboveground utilities, storm drains, buildings, and other projects.
b. Provide services from a resident engineer by a registered Professional Civil Engineer in the State of California, for the stated services on an "on-call as needed" basis for various civil engineering projects as assigned by the City.
c. Provide complete construction management, construction administration, inspection services and labor compliance for Capital Improvement Program (CIP) projects and private land development projects, including but not limited to project scheduling, project controls, project management, collaboration and claims resolution, daily reports and capturing photos, Contractor's labor force compliance monitoring, inspection/monitoring of traffic control procedures and traffic control plan, conducting progress meetings and preparing meeting minutes, coordinating with agencies and stakeholders, monitoring the project schedule, verifying quantities, and assuring quality control, and site safety.
d. Maintain complete and accurate project records, including monthly progress pay estimates, daily construction reports, extra work reports, contract change orders, labor and equipment records, correspondence, personnel records, records verifying stormwater pollution prevention plan (SWPPP) compliance, processing submittals of requests for information (RFIs), weekly statement of working days, change orders, punch-lists, and as-builts.
e. Maintain compliance of project records in compliance with the Caltrans manual, safety-related activities, implementing security procedures, coordinating survey and materials testing, as well as processing control documents, submittals, RFIs, weekly statement of working days, change orders, work change directives, , and compliance with NPDES and Caltrans encroachment permit requirements, if required
f. Attend pre-construction meetings, project progress meetings, and provide assistance in responding to all questions in timely manner.
g. Assist City in conducting and coordinating field meetings with contractors and act as the City's liaison for coordination and communication with other agencies, engineers, and architects as needed. Coordinate with design

engineers and project managers on design issues encountered during construction.

h. Review project contract documents and perform constructability reviews.
i. Review contractor's submittals in accordance with the requirements of project specifications and the City's requirements prior to final approval.
j. Review, negotiate, process and monitor contract change orders with the City's approval. Review extra work invoices.
k. Review and respond to RFIs in a timely manner.
l. Comply with grant requirements for local, state, and federal funded projects.
m. Provide labor compliance monitoring.
n. Provide construction inspection and quality control services.
o. Provide construction material testing and compaction testing.
p. Developing solutions to problems identified in the field with City approval.
q. Maintain all records and meet reporting requirements.
r. Provide community outreach and public outreach services as required.
s. Provide project status and overall condition of construction projects, including cost, budget, and schedule.
t. Identify and issue notice to contractor of safety concerns and violations.
u. Review and approve punch lists.
v. Participate and assist in conducting final inspection, testing and release of facilities.
w. Review and approve record drawings at project completion.
x. Assist in preparation of daily pay estimates in accordance with the inspection daily report, and assist in preparation of contractors monthly pay estimates.
y. Report all unresolved issues and potential claims to the City's representative in writing on a daily basis.
z. Other construction management duties as necessary to support City projects in construction.

Inspection Services

a. Provide inspection services from an inspector with a minimum of five (5) years of experience inspecting public works construction and private construction, including construction inspection of streets, sidewalks, curb and gutter, underground and aboveground utilities, storm drains, buildings, and other projects.
b. Review plans and specifications, and provide construction inspection/ observations for development projects related to the public right-of-way.
c. Observe construction of improvements by developers and/or contractors and make recommendations regarding completion and acceptance of the work.

d. Provide construction observations associated with work performed by developers on City streets, medians, slopes, parks, and other areas to ensure compliance with approved plans, specifications, permits, and City guidelines and standards.
e. Inspect plants and trees and make recommendations on acceptance of the plant materials.
f. Inspect landscape and irrigation improvements for compliance with approved plans.
g. Ensure that materials and completed work comply with plans, specifications, and design criteria.
h. Provide inspection services from an inspector with a minimum of five (5) years of experience inspecting public and private construction, and certification as a Qualified Stormwater Practitioner (QSP).
i. Inspect and provide recommendations for the installed Best Management Practices (BMP) for water quality.
j. Inspect street and storm drain improvement for compliance with approved plans.
k. Inspect approved work and installed water quality measures.
l. Prepare general correspondence and daily construction inspection reports, and coordinate with developers, engineers, staff, and the public.

Seismic and Structural Examination Services

a. Conducted by a Structural Engineer licensed by the State of California.
b. Provide detailed analysis accompanied by calculations, and an evaluation of mitigating alternatives.
c. Provide detailed structural and seismic analysis, based on the collected documentation, examination findings, geotechnical evaluation, demand and capacity calculations, and any other reviewed or collected data and information.
d. Provide analysis including a conclusive evaluation of repair, rehabilitation, and replacement alternatives for subject structure including inspected internal and external components, as well as alternative prioritization and recommendations (considering a short-term, mid-term, and long-term asset improvement life cycle).
e. Perform supporting structural and seismic design and capacity calculations.
f. Perform load to capacity calculations.

Material Testing and Geotechnical Engineering Services

a. Perform sub-surface exploration and material testing in accordance with City standards and/or Caltrans standards for street, facility, and other capital improvements.
b. Conduct geotechnical examinations of selected sites, based on data and observations collected from soil boring(s), including an evaluation of subsurface conditions, soil classification and relevant attributes (moisture content, compressive strength, etc.), settlement, bearing capacity / resistance, seismic considerations, and any other related concerns.
c. Provide comprehensive geotechnical reports including calculations and analysis of the subsurface profile and its impact on the seismic stability and structural integrity of the reservoir.
d. Perform building materials testing including welding on structural steel elements in accordance with current building standards and provide geotechnical services for all projects.
e. Perform source inspection of miscellaneous items and fabricated products such as steel girders, concrete girders and welded sign structures used on the State highway system.
f. Review material submittals for compliance with project specifications and applicable standards and regulations.
g. Perform background review of sites based on published and unpublished groundwater and geologic information.
h. Provide preliminary evaluation of seismic hazards and design parameters using fault maps and current building code.
i. Provide field exploration including drilling, sampling, and logging of test borings.
j. Perform geologic field mapping.
k. Perform soil analysis, soil classification, and site-specific soil characterization.
l. Provide recommendations on soil improvement.
m. Perform ground water investigation and control.
n. Provide design parameters for: Grading; Remedial measures; Shoring; Excavation; Backfill; Compaction; Slope stability; Soil bearing pressure; Foundation design, Lateral earth pressures for design of retaining walls; Groundwater dewatering.
o. Provide settlement evaluation and analyze potential for expansion.
p. Provide soil corrosivity testing and analysis, Evaluate imported earth materials to be used for fill.

q. Provide laboratory testing per City and Caltrans standards to determine maximum dry density and optimum moisture content for fill and backfill, and sand equivalent of all bedding material.
r. Perform laboratory tests on pipe bedding material and aggregate base material to verify their compliance with the project specifications.
s. Evaluate over-excavation, backfill, and compaction procedures.
t. Evaluate field procedures, progress, and testing results.
u. Observe site grading and fill placements, including in-place soil density testing of compacted fill, optimum soil moisture density test and relative compaction per project specifications.
v. Provide foundation engineering and inspection for structures; Inspect and evaluate earth-retaining structures and excavations.
w. Perform sieve analysis; Determine R-value; Pavement inspection and testing including preparation of pavement structural section based upon laboratory R-value, sieve analysis, and sand equivalent testing;
x. Perform concrete inspection and testing including air content and slump testing; Prepare standard test cylinders for concrete and provide laboratory compressive strength testing;
y. Attend meetings throughout the duration of the project as needed to provide technical advice on issues, project schedule, cost control and other related matters.
z. Prepare reports to include: description of field procedures, tabulation of daily field compaction test data, laboratory data, conclusions and recommendations. Provide reports bearing the Registered Professional Engineer Seal with the signature and license number of the geotechnical engineer responsible for preparation of the report.

Stormwater, Flood Plain, and Hydrogeological Engineering Services

a. Planning and design of water resources projects related but not limited to: the capture, retention and direct use of stormwater and surface water; groundwater recharge; multi-purpose watershed management facilities; low impact development (LID) measures; engineered wetlands for stormwater treatment; landscaping that utilizes native and other plant species for stormwater treatment and carbon sequestration; and stream and upland habitat creation and restoration.
b. Engineering assistance with construction, monitoring, and operations and maintenance.
c. Engineering assistance with National Pollutant Discharge Elimination System (NPDES) related programs.
d. Preparation of hydrology and hydraulic analysis and reports.

e. Preparation of Water Quality Management Plans (WQMP), Stormwater Pollution Prevention Plans (SWPPP), or related NPDES documents/reports.

Building and Facility Assessment Services

a. Prepare comprehensive facility assessment studies that include survey, inspection, inventory of building components, assessment of the existing conditions, corrective recommendations, preventative maintenance recommendations, budget estimates and timeline for all corrective work and preventative maintenance for all City Facilities.
b. Assess and provide recommendations on building envelopes, including condition of the outer shell of the building including walls, doors, windows and roofs.
c. Assess and provide recommendations on structural integrity, including walls and foundations.
d. Assess and provide recommendations on interior walls, ceilings, signage, paint, wall coverings, flooring and casework.
e. Assess and provide recommendations on mechanical systems, HVAC, exhaust, ventilation and controls.
f. Assess and provide recommendations on electrical systems, both interior and exterior, including distribution and lighting.
g. Assess and provide recommendations on plumbing systems, both interior and exterior.
h. Assess and provide recommendations on elevator systems.
i. Assess and provide recommendations on life safety and security systems, including adequacy of security for intended uses.
i. Assess and provide recommendations on Americans with Disabilities Act (ADA) Accessibility, both interior and exterior.
j. Assess and provide recommendations on preventative maintenance programs, requirements, or recommendations.
k. Assess and provide recommendations on sustainability components such as solar and alternative energy.
l. Assess and provide recommendations on space planning and present/future functional use of facilities.
m. Assess and provide recommendations on energy usage, perform energy audits.

n. Provide recommendations for environmental abatement, including, but not limited to lead/asbestos.
o. Assess and provide recommendations on in accordance with the latest versions of the California Building Standards Code.

p. Assess and provide recommendations on in accordance with the requirements of the Secretary of the Interior Design Standards and local Historic Preservation Guidelines.

Assessment District Services

a. Obtain all available information from the City regarding the district, including the current assessment databases, electronic map files from the City, a listing of projected expenditures and revenues and any additional information. Update the current database files with the latest Assessor's parcel numbers and land use information.
b. Review district budgets and confirm schedule; attend the City Council meetings considering the Resolutions of Intention and the public hearing, and provide technical support and answer questions.
c. Prepare the assessment report setting the annual assessment rates for the next fiscal year based on budget estimates from City. Furnish electronic copies of the draft reports and preliminary assessment rolls for review and comment.
d. Prepare assessment Rolls in electronic format, as required by the County Auditor-Controller for inclusion of assessments on the property tax bills. Submit the rolls to the County and, after receipt of the County's exception report, make any required corrections.

EXHIBIT B

"Approved Fee Schedule"

FEE PROPOSAL/SCHEDULE

Fee Schedule

Rates are effective through the initial term of the contract. After this time, NV5 may request a rate increase not to exceed the current Consumer Price Index (CPI).

ENGINEERING SERVICES (CATEGORIES 1, 2, 5, 6, 9, 19)	HOURLY RATE**
Principal	$230
Senior Project Manager	$205
Project Manager	$185
Quality Assurance Manager	$185
Senior Engineer	$165
Project Engineer	$140
Assistant Engineer	$130
Traffic Engineer	$225
Designer	$120
Plan Check Engineer III	$185
Plan Check Engineer II	$165
Plan Check I	$135
Engineering Technician	$90
CADD Drafter	$90
Administration	$90
CONSTRUCTION SERVICES (CATEGORIES 16, 17)	**HOURLY RATE****
Senior Construction Manager	$185
Construction Manager	$165
Senior Office Engineer	$140
Office Engineer	$120
Senior Construction Inspector (Prevailing Wage)*	**$159**
Construction Administration	$90
SURVEY TECHNICAL SERVICES (CATEGORIES 8, 10)	**HOURLY RATE****
Engineering Aide/Planning Aide	$89
Project Assistant	$95
Project Administrator	$110
CADD Technician I	$115
CADD Technician II	$126
CADD Technician III	$149
Sr. CADD Technician/Designer	$160
Design Supervisor	$163
GIS Technician I	$110
GIS Analyst	$149

Fee Schedule

Rates are effective through the initial term of the contract. After this time, NV5 may request a rate increase not to exceed the current Consumer Price Index (CPI).

SURVEY PROFESSIONAL SERVICES (CATEGORIES 8, 10)	HOURLY RATE**
Junior Engineer/Planner/Scientist/Surveyor	$131
Assistant Engineer/Planner/Scientist/Surveyor	$149
Associate Engineer/Planner/Scientist/Surveyor	$168
Senior Engineer/Planner/Scientist/Surveyor	$184
Manager	$236
Associate	$247
Principal	$275
FIELD SURVEY (CATEGORIES 8, 10)	**HOURLY RATE****
1-Person Survey Crew*	$185
2-Person Survey Crew*	$315
3-Person Survey Crew*	$385
AUDIOVISUAL, ELECTRICAL, FIRE PROTECTION, MECHANICAL, PLUMBING, SECURITY CONSULTING AND DESIGN SERVICES (CATEGORIES 3, 15, 24)	**HOURLY RATE****
Sr. Principals	$300
Principals	$275
Directors	$250
Associate Directors	$225
Sr. Managers	$200
Sr. Engineer/Manager	$175
Sr. Project Manager/Sr. Consultant	$160
Project Manager/Engineer/Consultant	$130
Sr. Designer/Sr. Engineer Assistant	$100
Designers/Engineer Assistant	$90
Sr. Drafter/CADD Operator	$85
Drafter/CADD Operator	$65
Administrative	$65
ENVIRONMENTAL - GEOLOGISTS, HYDROGEOLOGISTS, ENGINEERS, INDUSTRIAL HYGIENISTS, SCIENTISTS + SUPPORT PERSONNEL (CATEGORIES 12, 13, 21)	**HOURLY RATE****
Senior Principal	$240
Principal	$230
Senior III	$205
Senior II	$195
Senior I	$185

Fee Schedule

Rates are effective through the initial term of the contract. After this time, NV5 may request a rate increase not to exceed the current Consumer Price Index (CPI).

Staff III	$170
Staff II	$165
Staff I	$155
Associate III	$145
Associate II	$135
Associate I	$125
Specialist III	$105
Specialist II	$95
Specialist I	$80
Project Scientist	$62
Financial Analyst II	$115
Administrative I	$75
PUBLIC OUTREACH (CATEGORY 16)	**HOURLY RATE****
Project Manager	$235
Strategic Adviser	$235
Assistant Project Manager	$205
Integrated Marketing Specialist	$170
Media Relations Specialist	$155
Graphic Designer	$145
Project Coordinator	$130
ASSESSMENT DISTRICT SERVICES (CATEGORY 26)	**HOURLY RATE****
Principal/Assessment Engineer	$250
Senior CAD Technician	$135
Project Administration	$105
REIMBURSABLE EXPENSES	**COST**
Reproduction	Cost
Consultant Services	Cost + 15%
Automobile Transportation	per IRS standard
Delivery, Freight, Courier	Cost
Agency Fees	Cost
Commercial Travel	Cost

* Assumes prevailing wages are applicable for field work.

** Rates for Technical Staff are based on an 8-hour workday, Monday through Friday. Work in excess of eight (8) hours in one day will be charged a premium of 1.5 times the quoted rates. Work over 40 hours in one week will be charged at 1.5 times the quoted rate. Work over 12 hours in one day or over eight (8) hours on the seventh consecutive day or worked holidays will be charged at 2.0 times the quoted rates.

D

FEE PROPOSAL/SCHEDULE

GEOTECHNICAL SERVICES – CATEGORIES 16, 20	
PROFESSIONAL STAFF	
Personnel	
Senior Principal Engineer / Geologist	$245.00/hr.
Principal Engineer / Geologist	$225.00/hr.
Associate Engineer / Geologist	$205.00/hr.
Senior Engineer / Geologist	$185.00/hr.
Project Engineer / Geologist	$155.00/hr.
Senior Staff Engineer / Geologist	$135.00/hr.
Staff Engineer / Geologist	$120.00/hr.
Senior CQA Manager	$170.00/hr.
Project Manager	$150.00/hr.
Field Supervisor	$150.00/hr.
Administration Staff	$75.00/hr.
FIELD STAFF	
	Prevailing Wage*
Soil / ACI Technician I	$122.00/hr.
- Vehicle Charge	$50.00/day
- Equipment Charge	$5.00/hr.
ICC Special Inspector I (Concrete, Masonry, Steel, Bolt, Fireproofing)	$125.00/hr.
Certified Welding Inspector I	$125.00/hr.
NDT Technician	$128.00/hr.
Laboratory Technician	$80.00/hr.
Ground Penetrating Radar (Technician and Equipment)	$198.00/hr.
Coring Equipment Fee	$70.00/hr.
Torque/Pull Testing (Technician and Equipment)	$130.00/hr.
"Wildcat", 35-lb hammer Dynamic Cone Penetrometer (DCP) with tech	$400.00/hr.
Lightweight 5-lb Gas Dynamic Cone Penetrometer (DCP) equip with tech	$180.00/hr.
Seismic Refraction Survey Using Geode 24-Channel Seismodule	$3,150.00
Fall of Potential Ground Testing (Ground Rod Test) - Initial Test	$975.00
Fall of Potential Ground Testing (Ground Rod Test) - Subsequent Test	$585.00
Pick-Up	$80.00/hr.
LABORATORY FEE SCHEDULE	
Asphalt Concrete	
Asphalt Mix Design Review	$375.00/ea.
Hveem Stability	$215.00/ea.
Hveem Unit Weight Sample Requiring Compaction	$200.00/ea.
Marshall Stability, Flow & Unit Weight	210.00/ea. (per test specimen)
Maximum Theoretical Unit Weight (Rice)	$210.00/ea.
Extraction - Ignition Oven (including gradation)	$245.00/ea.
Percent Swell	$160.00/ea.
Unit Wt Compacted Sample (Specific Gravity)	$95.00/ea.
Aggregates	
Absorption Test, Coarse Aggregate	$54.00/ea.
LABORATORY FEE SCHEDULE (CONTINUED)	
Absorption Test, Fine Aggregate	$54.00/ea.

FEE PROPOSAL/SCHEDULE

Clay Lumps & Friable Particles	$135.00/ea.
Cleanness Value	$160.00/ea.
Crushed Particles, Percent	$205.00/ea.
Durability Index, Coarse Aggregate	$130.00/ea.
Durability Index, Fine Aggregate	$130.00/ea.
Abrasion Resistance by LA Rattler	$205.00/ea.
Organic Impurities in Sand	$80.00/ea.
Sieve Analysis Coarse Aggregate	$100.00/ea.
Sieve Analysis Coarse & Fine Aggregate (includes Wash)	$140.00/ea.
Sodium Sulfate Soundness (5 cycle test per primary size)	$390.00/ea.
Specific Gravity, Fine Aggregate	$95.00/ea.
Specific Gravity, Coarse Aggregate	$85.00/ea.
Unit Weight (per cubic foot) Voids in Aggregate	$75.00/ea.
Rock Core (Compressive Strength)	$95.00/ea.
Structural/Reinforcing Steel	
Headed Rebar Tensile Test - No. 8 Bar and Smaller <	$115.00/ea.
Headed Rebar Tensile Test - No. 9 Bar to No. 11	$140.00/ea.
H. S. Bolt Conformance– Bolt, Nut & Washer (DSA)	$480.00/ea.
Mechanically Spliced Reinforcing Steel - No. 8 Bar and Smaller <	$200.00/ea.
Mechanically Spliced Reinforcing Steel - No. 9 Bar to No. 11	$215.00/ea.
Mechanically Spliced Reinforcing Steel - No. 14	$235.00/ea.
Mechanically Spliced Reinforcing Steel - Slippage	$42.00/ea.
Mechanical Tests, Hardness Test, Rockwell	$118.00/ea.
Prestressed Steel, Tensile Test, Strand (7-wire Coated)	$235.00/ea.
Prestressed Steel, Tensile Test, Strand (7-wire Uncoated)	$275.00/ea.
Reinforcing Steel, Tensile Test – No. 8 Bar and Smaller <	$95.00/ea.
Reinforcing Steel, Tensile Test – No. 9 Bar to No. 11	$108.00/ea.
Reinforcing Steel, Tensile Test – No. 11 Bar and Greater >	Quote
Reinforcing Steel, Bend Test	$75.00/ea.
Spray-applied Fireproofing Density Tests	$110.00/ea.
Structural Steel, Tensile – Up to 200,000 lbs.	$160.00/ea.
Structural Steel, Bend Test	$105.00/ea.
Welded Specimens, Tensile Test	$135.00/ea.
Chemical Analysis	Quote
Machining Costs If Required	$80.00/hr.
Masonry	
Absorption Test, Brick	$65.00/ea.
Compression Test, Composite Prism	$185.00/ea.
Compression Test, Brick	$55.00/ea.
Compression Test, Blocks	$95.00/ea.
Compression Test, Cores (does not include Coring for samples)	$80.00/ea.
Compression Test, Grout / Mortar	$37.00/ea.
Masonry Block Conformance (Does not include shrinkage)	$480.00/ea.
LABORATORY FEE SCHEDULE (CONTINUED)	

FEE PROPOSAL/SCHEDULE

Modulus of Rupture, Brick	$55.00/ea.
Moisture as Received, Brick	$55.00/ea.
Saturation Coefficient Brick	$55.00/ea.
Unit Weight & Absorption, Block	$80.00/ea.
Efflorescence, Block or Brick Only	$80.00/ea.
Linear Shrinkage	$270.00/ea.
Masonry Core Shear Test	$130.00/ea.
Soils	
Soil Processing Fee (per sample)	$22.00/ea.
Chloride Content of Soil	$85.00/ea.
Consolidation (up to 9 loads)	$295.00/ea.
Direct Shear (undisturbed ring specimens)	$270.00/ea.
Direct Shear (remolded specimens)	$315.00/ea.
Expansion Index	$170.00/ea.
Proctor (per curve) - 4-inch mold	$210.00/ea.
Proctor (per curve) - 6-inch mold	$275.00/ea.
Rock Correction (if required)	$75.00/ea.
Moisture Content / Dry Density	$42.00/ea.
Organic Matter	$80.00/ea.
Plasticity Index/Liquid Limit (Atterberg Limit)	$160.00/ea.
R-value (minimum 3 points)	$340.00/ea.
Resistivity & pH of Soil	$180.00/ea.
Sand Equivalent	$100.00/ea.
Sieve Analysis	$135.00/ea.
Sieve Analysis, with Hydrometer	$270.00/ea.
No. 200 Mesh Wash Particle Size Gradation	$95.00/ea.
Sulfate Content of Soil	$85.00/ea.
Thermal Resistivity of Soil (including 1 proctor curve)	$1300.00/ea.
Concrete	
Compression Test, 4x8 Cylinder	$32.00/ea.
Compression Test, 6x12 Cylinder	$34.00/ea.
Compression Test Gunite / Shotcrete (3 Cores/Panel, Coring Included)	$420.00/ea.
Compression Test, Core (incl sample prep)	$80.00/ea.
Compression Test, Lightweight Concrete Fill	$53.00/ea.
Compression Test, Non-shrink Grout Cubes	$53.00/ea.
Concrete Flexural Test	$95.00/ea.
Concrete Mix Design (revision or review)	$375.00/ea.
Drying Shrinkage (3 specimens – 28 days)	$375.00/ea.
Modulus of Elasticity, Static	$270.00/ea.
Splitting Tensile Strength	$105.00/ea.
Thermal Resistivity Testing of Concrete / FTB	$485.00/ea.
Unit Weight, Lightweight Concrete Fill	$80.00/ea.

FEE PROPOSAL/SCHEDULE

Category 16

PACIFIC RESOURCES SERVICES

PACIFIC RESOURCES SERVICES LABOR RATES FROM 1/1/2022 THROUGH 12/31/2022 *		
Staff		**Hourly Rate**
Benjamin Ocasio	Lead Labor Compliance Analyst	$146.80
Open	Labor Compliance Analyst	$124.21
Monica Mendez	Lead Site Visits	$101.63
Morita Capili	Office Support	$79.05

*Rates will remain fixed during the duration of the agreement.

All hourly costs are fully burdened. There are no additional costs (such as mileage, communication, etc.) to our client.

EXHIBIT C

TASK ORDER NO. [NUMBER]

TO MASTER PROFESSIONAL SERVICES AGREEMENT (2022-###)

This Task Order No. **[###]** ("Task Order") is made and entered into by and between the City of South Pasadena, a municipal corporation ("City"), and [Consultant] ("Consultant").

RECITAL

A. City and Consultant entered into an agreement entitled Master On-Call Professional Services Agreement ("Agreement") dated **[DATE]** by which the Consultant agreed to perform **[SERVICE DESCRIPTION]** services in accordance with Task Orders issued by the City.

NOW, THEREFORE, THE PARTIES HEREBY AGREE AS FOLLOWS:

1. **INCORPORATION BY REFERENCE.** This Task Order hereby incorporates by reference all terms and conditions set forth in the Agreement.

2. **SCOPE OF TASK ORDER.** Consultant shall perform the following services in accordance with the terms and conditions of the Agreement:
   [INSERT DESCRIPTION OF SPECIFIC WORK HERE OR INCLUDE ATTACHMENT TO TASK ORDER]

3. **TASK ORDER ADMINISTRATOR.** Consultant shall designate a principal point of contact for this task order:
   [INSERT NAME AND CONTACT INFORMATION OF CONSULTANT TASK ORDER ADMINISTRATOR]

4. **SCHEDULE.** Consultant shall complete the Task Order by the date listed below, or, if specified, in accordance with the required schedule of milestones listed below:
   [INSERT COMPLETION DATE OR SCHEDULE OF MILESTONES AS ATTACHMENT]

5. **PAYMENT.** For services performed by Consultant in accordance with this Task Order, City will compensate Consultant in accordance with the terms and conditions of the Agreement based on the Fee Schedule set forth below. The total cost of this project is to be no more than **[MAXIMUM AMOUNT]**, based on the rates in the Fee Schedule set forth below, and the timing of such payment as stated in the Scope of Task Order.

6. **SIGNATURES.** The individuals executing this Task Order represent and warrant that they have the right, power, legal capacity, and authority to enter into and to execute this Task Order on behalf of the respective legal entities of the Consultant and the City.

IN WITNESS WHEREOF, the City and Consultant do hereby agree to the full performance of the terms set forth herein.

"City"
City of South Pasadena

By:_____
Signature

Printed:_____

Title:_____

Date:_____

"Consultant"
[COMPANY]

By:_____
Signature

Printed:_____

Title:_____

Date:_____

Approved as to form:

By:_____
Roxanne Diaz, City Attorney

Date:_____

City Council Agenda Report

ITEM NO. 10

DATE: June 18, 2025

FROM: Todd Hileman, City Manager

PREPARED BY: Robert (Dean) Flores, Acting Planning Manager

SUBJECT: **CONSIDERATION OF ADOPTION OF AN ORDINANCE OF THE CITY OF SOUTH PASADENA AMENDING ARTICLE IVH (CULTURAL HERITAGE COMMISSION) OF CHAPTER 2 OF THE SOUTH PASADENA MUNICIPAL CODE TO REQUIRE A POSTED ON-SITE NOTICE FOR HEARINGS; EXTENDING THE EXPIRATION DATE FOR CERTIFICATES OF APPROPRIATENESS FROM 18 TO 24 MONTHS; INCREASING MINOR PROJECT REVIEW THRESHOLDS FOR CHAIR REVIEW; AND UPDATING LANGUAGE FOR CONSISTENCY AND CLARIFICATION**

Recommendation

It is recommended that the City Council adopt the ordinance amending Article IVH (Cultural Heritage Commission of Chapter 2 (Administration) of the South Pasadena Municipal Code to make administrative processing improvements for certificates of appropriateness, increase public noticing and remove language inconsistencies.

Executive Summary

The proposed amendments to the Cultural Heritage Commission Ordinance (CHC) were originally brought before the City Council for first reading on March 19, 2025 and second reading on April 16, 2025. Upon second reading of the ordinance, the City Council moved to remand the item back to the CHC for further review based on public comments received. Thereafter, staff met with the public commenter to help develop changes to the draft ordinance based on the issues raised. The item was brought to the CHC on May 15, 2025 with two proposed changes to the ordinance. Upon review, the CHC voted to recommend that the City Council adopt the proposed amendments based on staff's recommended changes. Upon review by City Council on June 4, 2025, the City Council, in a 5-0 vote, moved to introduce the ordinance by title only and waive full reading of the ordinance amending Article IVH (Cultural Heritage Commission of Chapter 2 (Administration) of the South Pasadena Municipal Code to make administrative processing improvements for certificates of appropriateness, increase public noticing and remove language inconsistencies. The ordinance is now before the City Council for adoption.

Background

Over the past year, the Cultural Heritage Commission and Community Development Department staff have identified the need to address certain issues in the current Cultural Heritage Ordinance to improve administration and community notification processes to benefit South Pasadena's historic preservation program. Several code revisions were developed and

originally brought before the CHC on February 20, 2025 as an informational item to give the CHC the opportunity to provide feedback on the draft amendments. At that time, there were no recommended changes to the proposed amendments by the CHC.

On March 19, 2025 the proposed amendments in the draft Ordinance were introduced and the First Reading was held by the City Council. Upon Second Reading at the City Council on April 16, 2025, the item was pulled from the Consent Calendar for further discussion based on feedback from public comments received. The City Council then remanded the item back to the CHC for further consideration for the following reasons:

1. Reconsideration of the proposed square footage threshold increase from 200 square feet to 500 square feet for Minor Certificates of Appropriateness, and
2. Reconsideration of the proposed amendment to allow the Director to determine whether an intensive-level Historic Resource Evaluation (HRE) is needed for a project.

Thereafter, based on the direction from the City Council, City staff revisited the two items mentioned for reconsideration. First, City staff reached out to the public commenter from the City Council meeting, Debi Howell-Ardilla, who is also a former CHC Commissioner, to address her concerns from the initial proposed CHC amendments. Next, based on discussions with Ms. Howell-Ardilla, staff made minor adjustments to the original draft amendments and presented the revised proposed Ordinance to CHC for their review and consideration during their regularly scheduled meeting on May 15, 2025. The CHC staff report is provided as Attachment 2. Ms. Howell-Ardilla also provided written support for the proposed amendments at that time (Attachment 3). The CHC had no additional feedback or changes to the proposed Ordinance and recommended that City Council approve the Ordinance based on staff's recommended changes.

Analysis

As shown in the CHC staff report (Attachment 2), the original draft revisions to the CHC Ordinance were proposed in order to improve administration of the ordinance, including streamlining and clarification of certain processes. As noted in the report, most of the original draft amendments to the ordinance will remain the same with the exception of the aforementioned items which are sections 2.65(e)(3) – "Properties 45 Years or Older," 2.65(e)(3)(A) – "Applicability," and 2.65(e)(4) - Minor Project Review." In the report, it states that the sole changes to those areas of the code are bolded in red.

In sum, the proposed revised changes to the ordinance include the following:

1. The threshold for minor certificate of appropriateness review (which are processed through Chair Review applications) will be "...**additions of no more than 500 square feet in area, or no more than 25 percent of the existing structure, whichever is less**..."
2. Revising the language on when an Historic Resource Evaluation (HRE) would be required for a specific circumstance - when a non-historic accessory structure is proposed for demolition. As such, the new language reads, "**A certificate of appropriateness may be required for demolition of a building or structure, excluding any accessory structure, that is 45 years or older, and not identified as a cultural resource**..."

Staff has provided an analysis for each of the revised sections in Attachment 2. To

summarize, in regards to #1 listed above, the new threshold revision is being revised for two primary reasons - to account for projects featuring smaller existing homes where an addition of up to 500 square feet may potentially be too large for a Chair Review process and to align the language with the Design Review amendments that were made earlier this year in a separate Zoning Text Amendment that the City Council approved in April 2025.

Regarding #2, the original intent of allowing the Director to determine whether an intensive-level HRE (instead of a lesser-intense HRE) would be required was to prevent applicants from taking on a cumbersome process for certain types of projects. However, the language proposed in the original draft Ordinance made it seem that the Director would have the discretion on whether an HRE would be required at all. So, instead the language has been revised to clearly articulate when an HRE would not be required for the specific circumstance - when an applicant is proposed to demolish a non-historic accessory structure more than 45 years old.

Alternatives
As an alternative to the recommendation, the City Council may consider to:

1. Revise the draft provisions of the ordinance and if so, the ordinance will need to be re-introduced,
2. Not adopt the ordinance and if so, the current provisions of the Municipal Code will remain.

Fiscal Impact
The proposed Municipal Code amendments would not have any budgetary impact for the City. The change in minor project threshold would result in additional projects that would be approved by the CHC Chairperson, which have lower application fees than CHC hearing items, but the proposed process changes would not require any adjustment to the City's fee schedule.

Commission Review and Recommendation
As noted throughout the staff report, the CHC reviewed the changes to the draft Ordinance and did not have any additional recommended changes. As a result, the CHC made a motion to recommend that the City Council adopt the draft Ordinance as proposed.

Public Notification
Although not required, staff published a public notice of the item in the Pasadena Star-News on May 27, 2025. The public was also made aware of the regularly scheduled Council meeting on June 18, 2025, through its inclusion in the legally publicly noticed agenda, posted physically at City Hall and also on the City’s website.

Environmental Analysis
Staff recommends that the Council find that the proposed ordinance is exempt from the provisions of the California Environmental Quality Act (CEQA) pursuant to CEQA Guidelines Section 15061(b)(3), which provides a common sense exemption in that CEQA applies only to projects which have the potential for causing a significant effect on the environment. In this case, the proposed municipal code amendments support administrative improvements, extend permit validity periods and increase public notification regarding proposed projects, in addition to updating language to remove inconsistencies, and there is no possibility that the activity in question may have a significant effect on the environment.

Attachment:
Attachment No. 1 - CHC Draft Ordinance Proposed Changes
Attachment No. 2 - CHC Staff Report 5-15-2025
Attachment No. 3 - Public Comment Received CHC 5-15-25

ORDINANCE NO.____

AN ORDINANCE OF THE CITY OF SOUTH PASADENA AMENDING ARTICLE IVH (CULTURAL HERITAGE COMMISSION) OF CHAPTER 2 OF THE SOUTH PASADENA MUNICIPAL CODE TO REQUIRE A POSTED ON-SITE NOTICE FOR HEARINGS; EXTENDING THE EXPIRATION DATE FOR CERTIFICATES OF APPROPRIATENESS FROM 18 TO 24 MONTHS; INCREASING MINOR PROJECT REVIEW THRESHOLDS FOR CHAIR REVIEW; AND UPDATING LANGUAGE FOR CONSISTENCY AND CLARIFICATION

WHEREAS, the City of South Pasadena desires to improve the administration of the City's historic preservation program as described in Article IVH (Cultural Heritage Commission) of Chapter 2 (Administration);

WHEREAS, on February 20, 2025, at a regular meeting of the Cultural Heritage Commission ("Commission"), the Commission reviewed the proposed amendments set forth in this Ordinance;

WHEREAS, on March 19, 2025, the City Council, at a regular meeting, considered this Ordinance to amend Article IVH (Cultural Heritage Commission) of Chapter 2 (Administration);

WHEREAS, on April 16, 2025, the City Council, at a regular meeting, considered this Ordinance to amend Article IVH (Cultural Heritage Commission) of Chapter 2 (Administration) on second reading of the ordinance. The City Council then voted to remand the item back to the Cultural Heritage Commission for further review and consideration based on issues raised by public comments;

WHEREAS, on May 15, 2025, the Cultural Heritage Commission, at a regular meeting, voted to recommend that the City Council adopt this revised Ordinance to amend Article IVH (Cultural Heritage Commission) of Chapter 2 (Administration), based on staff's recommended changes.

WHEREAS, on June 4, 2025, the City Council, at a regular meeting, considered this Ordinance to amend Article IVH (Cultural Heritage Commission) of Chapter 2 (Administration) on first reading of the ordinance, including the revised changes to the ordinance.

NOW, THEREFORE, THE CITY COUNCIL OF THE CITY OF SOUTH PASADENA, CALIFORNIA, DOES HEREBY ORDAIN AS FOLLOWS:

SECTION 1. Recitals. The City Council finds the foregoing recitals and their findings to be true and correct.

SECTION 2. Environmental Findings. The City Council finds the amendments set forth in this Ordinance support administrative improvements, extend permit validity periods and increase public notification regarding proposed projects, in addition to updating language to remove inconsistencies and there is no possibility that the activity in question may have a significant effect on the environment. Therefore, the amendments qualify for the common sense exemption from the California Environmental Quality Act (CEQA), as set forth CEQA Section 15061(b)(3).

SECTION 3. Section 2.59A (Definitions) of Article IVH (Cultural Heritage Commission) of Chapter 2 (Administration) of the South Pasadena Municipal Code is hereby amended to add the following definition to the list of definitions set forth in paragraph (d) as follows:

"Director" ~~**is**~~ **means** the City of South Pasadena ~~**director of planning and building**~~ **Community Development Director**, or designee of the ~~**director**~~ **Director** referred to in this article as the "~~**director**~~ **Director**."

SECTION 4. Subparagraph (A) of subparagraph (2) (Identify Cultural Resources) of paragraph (b) (Enumerated Powers) of Section 2.62 (Powers and duties of the Commission) of Article IVH (Cultural Heritage Commission) of Chapter 2 (Administration) of the South Pasadena Municipal Code is hereby amended to read as follows:

"(A) Compile and maintain a current South Pasadena inventory of cultural resources that includes all sites, natural features, buildings and structures that are potentially eligible for landmark or historic district status or that may warrant special consideration in local planning. Copies of the inventory shall be transmitted to the city clerk and city manager, and to the departments of ~~**planning and building**~~, **Community Development, ~~parks and recreation~~ Community Services**, ~~**p**~~**P**ublic ~~**w**~~**Works** and other appropriate departments and governmental or civic agencies;"

SECTION 5. Subparagraph (B) of subparagraph (2) (Identify Cultural Resources) of paragraph (b) (Enumerated Powers) of Section 2.62 (Powers and duties of the Commission) of Article IVH (Cultural Heritage Commission) of Chapter 2 (Administration) of the South Pasadena Municipal Code is hereby amended to read as follows:

"(B) Compile and maintain for ~~**c**~~**City** ~~**c**~~**C**ouncil approval a current South Pasadena register of landmarks and historic districts. The register shall contain a description of the landmark or historic district on the register and its reason for inclusion therein. Copies of the register shall be transmitted to the city clerk and city manager, and to the departments of planning and building, parks and recreation, public works and other appropriate departments and governmental or civic agencies;"

SECTION 6. Subparagraph (4) of subparagraph (c) (Designation Procedure) of Section 2.63 (Register of landmarks and historic districts) of Article IVH (Cultural Heritage Commission) of Chapter 2 (Administration) of the South Pasadena Municipal Code is hereby amended to read as follows:

"(4) The commission shall notify the ~~**d**~~ **D**irector of the pendency of the consideration. No applications for design review shall be accepted by the ~~**planning and building department**~~ **Community Development Department** to construct, alter or demolish any property that is not on the South Pasadena inventory of historical resources within a proposed historic district, subsequent to the date of notice to the ~~**d**~~**D**irector by the commission, while proceedings are pending on such designation; provided, however, that after 180 days have elapsed from the date of the notice, if final action on such designation has not been completed, the applications for design review may be accepted by the ~~**planning and building department**~~ **Community Development Department**."

SECTION 7. Subparagraph (2) (Application) of paragraph (e) (Procedures for a Certificate of Appropriateness) of Section 2.65 (Certificate of appropriateness-Alteration and demolition) of Article IVH (Cultural Heritage Commission) of Chapter 2 (Administration) of the South Pasadena Municipal Code is hereby amended to read as follows:

"(2) Application. The owner or authorized representative proposing a discretionary project that may affect: a cultural resource, a noncontributing resource within the boundaries of **a** federal, state, ~~**and**~~ **or** local historic district, shall file an application for a certificate of appropriateness on forms provided by the ~~**city's planning and building department**~~ **Community Development Department** for such purpose. The application must be accompanied by any fee required by the city."

SECTION 8. Subparagraph (3) (Properties 45 Years or Older) of paragraph (e) (Procedures for a Certificate of Appropriateness) of Section 2.65 (Certificate of appropriateness-Alteration and demolition) of Article IVH (Cultural Heritage Commission) of Chapter 2 (Administration) of the South Pasadena Municipal Code is hereby amended to read as follows:

"(3) Properties 45 Years or Older. A certificate of appropriateness may be required for demolition of a building or structure**, excluding any accessory structure,** that is 45 years or older, and not identified as a cultural resource. The purpose of this subsection is to ensure that such buildings and structures are properly evaluated prior to their demolition or removal."

SECTION 9. Subparagraphs (A) (Applicability), (B) (Procedure) and (C) (Notice) of subparagraph (3) (Properties 45 Years or Older) of paragraph (e) (Procedures for a Certificate of Appropriateness) of Section 2.65 (Certificate of appropriateness-Alteration and demolition) of Article IVH (Cultural Heritage Commission) of Chapter 2 (Administration) of the South Pasadena Municipal Code is hereby amended to read as follows:

"(A) Applicability. Any proposed project submitted to the ~~**planning and building department**~~ **Community Development Department** that includes the demolition or removal of a building or structure**, excluding any accessory structure,** that was constructed at least 45 years prior to the date of application for such project shall file a notice of intent to demolish in a form approved by the director. The determination as to whether a property is a cultural resource shall require a ~~**deposit**~~ **historical resource evaluation fee** by the applicant to cover city costs associated with hiring a historic consultant and/or an architectural historian; and/or a deposit to cover the costs associated with the preparation of an initial study, environmental impact report, mitigated negative declaration or negative declaration.

(B) Procedure. The ~~**d**~~**Director** ~~**or his/her designee**~~ shall review the project involving demolition and confirm that the following materials have been provided including: an intensive level historic resources evaluation (HRE) that follows the practices established by the California Office of Historic Preservation shall be prepared for the property; plans for the replacement development project consistent with the standards and requirements of the applicable zoning district; and photo verification that the property has been posted with a notice of intent to demolish. Upon receipt of the filing materials, the ~~**director**~~ **Director** ~~**or**~~

~~his/her designee~~ will schedule the demolition application for the next available commission meeting.

(C) Notice. Public notification shall be provided ~~to the applicant, to all owners of real property as shown on the county's latest equalized assessment roll, and to all legal occupants located within a 300-foot radius of the subject parcel upon which the intent to demolish is requested~~ **in accordance with SPMC Section 36.630.020 (Public Hearings)**."

SECTION 10. Subparagraph (4) (Minor Project Review) including subparagraphs (A) and (B) of paragraph (e) (Procedures for a Certificate of Appropriateness) of Section 2.65 (Certificate of appropriateness-Alteration and demolition) of Article IVH (Cultural Heritage Commission) of Chapter 2 (Administration) of the South Pasadena Municipal Code is hereby amended in its entirety to read as follows:

"(4) Minor Project Review. A certificate of appropriateness may be obtained by going through a minor project review if it involves: demolition or relocation of non-character-defining features; ~~noncontributing~~ additions **to non-contributing** garages **and** accessory structures**;** ~~or~~ **replacement of** incompatible and previously replaced windows, doors or siding material; any undertaking that does not change exterior features such as re-roofing if the proposed roofing material is comparable in appearance, color and profile to the existing or original roofing material; replacement of windows and doors if the proposed replacements are of the same materials, form, color, and location as the existing or original windows and doors; ~~an addition of less than 200 square feet proposed for the side or rear elevations~~ **additions of no more than 500 square feet in area, or no more than 25 percent of the existing structure, whichever is less** (not visible from the public right-of-way) and **which** does not materially alter the features or have an adverse effect on the historic integrity of a cultural resource; minor changes to a previously approved certificate **as determined by the Director**; or any other undertaking determined by the ~~d~~**D**irector ~~or his/her designee~~ to not materially alter the features or have an adverse effect on the integrity of a cultural resource.

(A) Requirements. The required application materials for minor project review shall include, without limitation: a written narrative of the proposed project, a vicinity map, a site plan, exterior elevations drawn to scale, a window and door schedule, and photographs of the structure and the neighborhood. **The written narrative shall provide a complete overview of the project and contain relevant available historical information.**

(B) Review Process. After the certificate of appropriateness application for minor project review is deemed complete by the ~~d~~**D**irector ~~or his/her designee~~, the commission's chairperson (the "chair"), or his/her designee, shall evaluate the application to determine its eligibility for minor project review. If the proposed project meets the eligibility criteria for minor project review, the ~~commission's chairperson~~ **chair**, or his/her designee, may elect to do one of the following:

(i) Approve the Certificate of Appropriateness. If the proposed minor project is deemed consistent with the Secretary of the Interior's Standards for the Treatment of Historic Properties and the ~~c~~**City** of South Pasadena's adopted design guidelines, the ~~commission's chairperson~~ **chair** or his/her designee may approve the proposed project;

(ii) Consent Calendar. If the chair, or his/her designee, determines that the proposed minor project needs additional review by the commission, he or she may elect to place it on the commission's next meeting agenda. Such project shall be noticed pursuant to subsection (e)(7) of this section, Public Notice Requirements, as a consent calendar item on that agenda; or

(iii) Deny the Certificate of Appropriateness. If the proposed minor project is deemed to be inconsistent with the Secretary of the Interior's Standards for the Treatment of Historic Properties and the city's adopted design guidelines, the chair or his/her designee may elect to refer the proposed project to the entire commission through the certificate of appropriateness (major project review) procedure pursuant to subsection (e)(5) of this section."

SECTION 11. Subparagraph (5) (Major Project Review) of paragraph (e) (Procedures for a Certificate of Appropriateness) of Section 2.65 (Certificate of appropriateness-Alteration and demolition) of Article IVH (Cultural Heritage Commission) of Chapter 2 (Administration) of the South Pasadena Municipal Code is hereby amended to read as follows:

"(5)Major Project Review. **A major project review shall be required for any activity that is not defined as a minor project per subsection (4) above.** The certificate of appropriateness application must be accompanied by any fee as required by the ~~c~~**C**ity of South Pasadena and documentation as the commission shall require, including without limitation:"

SECTION 12. Subparagraph (A) (Written Narrative) of subparagraph (5) (Major Project Review) of paragraph (e) (Procedures for a Certificate of Appropriateness) of Section 2.65 (Certificate of appropriateness-Alteration and demolition) of Article IVH (Cultural Heritage Commission) of Chapter 2 (Administration) of the South Pasadena Municipal Code is hereby amended to read as follows:

"(A) Written Narrative. ~~**A written**~~ **The** narrative ~~**of the project indicating**~~ **shall indicate** the manner and ~~**the**~~ extent in which the proposed project is consistent with the Secretary of the Interior's Standards for the Treatment of Historic Properties and the city of South Pasadena's adopted design guidelines. **The written narrative shall provide a complete overview of the project and contain relevant available historical information.**"

SECTION 13. The text that follows Section 2.65(e)(5)(J) without a numerical reference is hereby amended to read as follows:

"The application shall be filed with the ~~**d**~~**D**irector ~~**or his/her designee**~~ who shall transmit the same to the commission upon receipt of a complete application, as determined pursuant to the Permit Streamlining Act."

SECTION 14. Subparagraph (6) (Timing of Review) of paragraph (e) (Procedures for a Certificate of Appropriateness) of Section 2.65 (Certificate of appropriateness-Alteration and demolition) of Article IVH (Cultural Heritage Commission) of Chapter 2 (Administration) of the South Pasadena Municipal Code is hereby amended to read as follows:

"(6)Timing of Review. If the proposed project is exempt from the California Environmental Quality Act, the commission shall have 60 days from the date of receipt of a complete application from the ~~**director**~~ **Director**, ~~**or his/her designee,**~~ within which to grant or deny the certificate. A continuance may be granted pursuant to the Permit Streamlining Act. If any action under this article is subject to the provisions of CEQA, the time in which such action must be taken shall be extended in order to allow time to comply with CEQA; provided, however, that such action is taken within the time limits imposed by the Permit Streamlining Act. The cultural heritage commission will be advisory to the planning commission on requested variances for properties on the register of landmarks and historic districts and the South Pasadena inventory of cultural resources."

SECTION 15. Subparagraph (A) (Hearing Notice to Applicant and Owners) of subparagraph (7) (Public Notice Requirements) of paragraph (e) (Procedures for a Certificate of Appropriateness) of Section 2.65 (Certificate of appropriateness-Alteration and demolition) of Article IVH (Cultural Heritage Commission) of Chapter 2 (Administration) of the South Pasadena Municipal Code is hereby amended to read as follows:

"(A) Hearing Notice to Applicant and Owners. Public notification shall be provided to the applicant, to all owners of real property **within a 300' radius of the subject property** as shown on the County's latest equalized assessment roll, and to all legal occupants located within a 300-foot radius of the subject ~~**parcel**~~ **property** upon which a certificate is requested."

SECTION 16. A new Subparagraph (C) (Site Posting) is hereby added to subparagraph (7) (Public Notice Requirements) of paragraph (e) (Procedures for a Certificate of Appropriateness) of Section 2.65 (Certificate of appropriateness-Alteration and demolition) of Article IVH (Cultural Heritage Commission) of Chapter 2 (Administration) of the South Pasadena Municipal Code to read as follows:

"**(C) Site Posting. A notice of public hearing shall be posted at the subject property in accordance with SPMC Section 36.630.020.D.**"

SECTION 17. Subparagraph (11) (Expiration of Certificate of Appropriateness) of paragraph (e) (Procedures for a Certificate of Appropriateness) of Section 2.65 (Certificate of appropriateness-Alteration and demolition) of Article IVH (Cultural Heritage Commission) of Chapter 2 (Administration) of the South Pasadena Municipal Code is hereby amended in its entirety to read as follows:

"(11) Expiration of Certificate of Appropriateness. A certificate of appropriateness shall lapse and become void ~~**18**~~**24** months ~~**(or shorter period if specified as a condition of approval)**~~ from the date of final approval, unless a**n application for a** building permit (if required) has been **submitted or** issued and the **applicant is diligently pursuing permit issuance or has commenced** work authorized by the certificate. ~~**has commenced prior to such expiration date and is diligently pursued to completion**~~.

(A) Upon application by the property owner before the expiration of a certificate of appropriateness, the ~~**commission**~~ **Director** may **grant two (2) one-year extensions to** extend the expiration date of the certificate for an additional period of up to ~~**12**~~ **24** months. The ~~**commission**~~ **Director** may approve**,** ~~**approve with conditions,**~~ or deny any request for extension.

(B) Hearing on extension. The Commission shall hold a hearing on any proposed extension beyond 48 months (inclusive of the original two-year approval and two (2) one-year extensions), in compliance with Division 36.630 (Public Hearings)."

SECTION 18. Severability. If any section subsection, subdivision, paragraph, sentence, clause or phrase of this Ordinance is for any reason held to be invalid or unconstitutional by any court of competent jurisdiction, or contravened by reason of any preemptive legislation, the remaining sections and/or provisions of this Ordinance shall remain valid. The City Council hereby declares that it would have adopted this Ordinance, and each section, subsection, subdivision, paragraph, sentence, clause or phrase hereof, regardless of the fact that any one or more section(s) or provision(s) may be declared invalid or unconstitutional or contravened via legislation.

SECTION 19. Effective Date. The City Clerk shall certify to the passage of this Ordinance and shall cause the same to be published in the manner prescribed by law, and this Ordinance shall become effective 30 days following its adoption.

PASSED, APPROVED AND ADOPTED ON this 18th day of June, 2025.

AYES:

NOES:

ABSENT:

ABSTAIN:

Janet Braun, Mayor

ATTEST:

Hector Gomez, Chief City Clerk

APPROVED AS TO FORM:

Roxanne Diaz, City Attorney

CITY OF SOUTH PASADENA

CITY CLERK'S DIVISION

CERTIFICATION OF ORDINANCE

STATE OF CALIFORNIA)
COUNTY OF LOS ANGELES) SS
CITY OF SOUTH PASADENA)

I, Hector Gomez, Chief City Clerk of the City of South Pasadena, do hereby certify that Ordinance No. _____, was duly and regularly approved and adopted at a Regular meeting of the City Council on this 18th day of June, 2025, by the following votes as the same appears on file and of record in the Office of the City Clerk.

AYES:

NOES:

ABSENT:

ABSTAIN:

_____
Hector Gomez
Chief City Clerk

Cultural Heritage Commission Agenda Report

ITEM NO.

DATE: May 15, 2025

FROM: Bradley Evanson, Interim Community Development Director

PREPARED BY: Robert (Dean) Flores, Acting Planning Manager

SUBJECT: **Discussion Item: Recommendation to City Council of draft Ordinance for Proposed Amendments to SPMC Chapter 2, Article IVH (Cultural Heritage Commission)**

RECOMMENDATION

Staff recommends that the Cultural Heritage Commission (CHC) receive revisions to the draft amendments to Article IVH of Chapter 2 of the South Pasadena Municipal Code (SPMC) and either:

1) Recommend the City Council adopt the proposed amendments at their first meeting in June, or
2) Propose revisions to the draft amendments and recommend the City Council adopt the Commission's revised draft amendments.

BACKGROUND

Over the past year, the Cultural Heritage Commission and Community Development Department staff have identified the need to address certain issues in the current Cultural Heritage Ordinance to improve administration and community notification processes to benefit South Pasadena's historic preservation program. Several code revisions were developed and originally brought before the CHC on February 20, 2025 as an informational item to give the CHC the opportunity to provide feedback on the draft amendments. At that time, there were no recommended changes to the proposed amendments by the CHC.

On March 19, 2025 the proposed amendments in the draft Ordinance were introduced and approved on First Reading by the City Council. Upon Second Reading of the City Council on April 16, 2025, the item was pulled from the Consent Calendar for further

discussion based on feedback from public comments received. The City Council then remanded the item back to the CHC for further consideration for the following reasons:

1) Reconsideration of the proposed square footage threshold increase from 200 square feet to 500 square feet for Minor Certificates of Appropriateness, and
2) Reconsideration of the proposed amendment to allow the Director to determine whether an intensive-level Historic Resource Evaluation (HRE) is needed for a project.

DISCUSSION/ANALYSIS

Originally, the draft revisions (Attachment 1) to the CHC Ordinance were proposed for the following specific purposes:

- To update references to the Director consistent with the change of department name from Planning and Building to Community Development;
- To clarify what constitutes a Major and Minor project and authorize the Community Development Director to determine whether a project is minor. The threshold for Minor Project Review would increase from 200 square feet to 500 square feet;
- To clarify the requirements for a written narrative of a project to ensure complete, relevant historical information;
- To authorize the Director to determine if an intense level Historic Resources Evaluation (HRE) is needed for a project;
- To require a sign to be posted on site for public hearings along with clarification that all residents and property owners within 300 feet of a project site must be notified of a public hearing;
- To extend the timeframe for which approved Certificates of Appropriateness (COA) would be valid from the current 18 months to 24 months. (This same extension is being proposed for all Planning entitlements);
    - The Director would have the authority to issue two (2) one-year extensions in addition to the original 24-month term. Any extension beyond that time would require a hearing before the Cultural Heritage Commission.

However, based on the direction from the City Council, City staff has revisited the two items mentioned for reconsideration. Additionally, City staff also reached out to the public commenter from the City Council meeting, Debi Howell-Ardilla to address her concerns from the initial proposed CHC amendments. As such, City staff is recommending minor adjustments to the original draft amendments.

<u>Minor Certificate of Appropriateness Threshold</u>

With respect to the square footage threshold for additions to historic structures, the current standard is no more than 200 square feet can be reviewed at a CHC Chair Review level. Any square footage more than 200 square feet must be reviewed by the entire CHC. In an effort to streamline this process, staff initially proposed a threshold of up to 500 square feet for Chair Reviews. However, after further discussion and analysis, staff is now recommending the threshold include a 25 percentage amount (i.e. additions up to 500 square feet, or 25%, whichever is less). This hybrid approach will align with the Design Review amendments that were made earlier this year in a separate Zoning Text Amendment that the City Council approved. This approach accounts for projects featuring smaller existing homes where an addition of up to 500 square feet may potentially be too large for a Chair Review process. Additionally, staff has provided data as shown in **Table 1** below to show how many projects within the past two years would have been affected by this proposed change.

Table 1: CHC Room Addition Projects (2022-2025)

Year	Projects within 200-500 sq.ft., or 25% of existing square footage	Projects above 500 square feet, or more than 25% of existing square footage	Total	Percentage of total projects within 200-500 sq.ft./25% range
*2025 (YTD)**	1	1	2	50%*
2024	3	10	13	23%
2023	3	10	13	23%
2022	1	7	8	13%
Total	8	28	36	**22%**

As shown in **Table 1 above**, within the past few years, a total of 8 projects that were reviewed by the CHC fall within the proposed threshold increase of single-story room addition projects between 200 square feet and 500 square feet, or no more than 25% of the existing home's square footage. While the amount of projects comprise only 22% of applicable projects, staff contends that this proposed amendment will help streamline the certificate of appropriateness for those projects that will fall within the new threshold. It's also important to note that the proposed increase in threshold can possibly dissuade applicants from proposing more than 500 square foot additions (or 25% of existing square footage) as to avoid overbuilding the historic resource since homeowners/applicants typically try to avoid a public hearing process. Lastly, it's also important to note that the CHC Chair has the discretion to elevate any project from a Chair Review to a full CHC review if they believe a full review is appropriate.

With that said, staff is providing revised language to this threshold in the Draft Ordinance and is provided below:

"(4) Minor Project Review. A certificate of appropriateness may be obtained by going through a minor project review if it involves: demolition or relocation of non-character-defining features; **noncontributing** additions **to non-contributing** garages **and** accessory structures**; or replacement of** incompatible and previously replaced windows, doors or siding material; any undertaking that does not change exterior features such as re-roofing if the proposed roofing material is comparable in appearance, color and profile to the existing or original roofing material; replacement of windows and doors if the proposed replacements are of the same materials, form, color, and location as the existing or original windows and doors; ~~**an addition of less than 200 square feet proposed for the side or rear elevations**~~ **additions of no more than 500 square feet in area, or no more than 25 percent of the existing structure, whichever is less** (not visible from the public right-of-way) and **which** does not materially alter the features or have an adverse effect on the historic integrity of a cultural resource…"

Intensive-Level Historic Resource Evaluation (HRE)

With respect to the previously proposed amendment regarding the Director having the authorization to determine whether an intensive level HRE would be required in certain circumstances, staff has decided to withdraw the proposed amendment. Initially, the intent of the amendment was to allow the Director to have the discretion as to not require an intensive-level HRE for smaller scale projects such as a demolition of an accessory structure that is not a cultural resource. However, because of the unclear intention that was provided in the original language of the amendment, staff has decided not to pursue amending that particular section of the Code (section 2.65(e)(3)(B) – Procedure) pertaining to giving the Director the authority of when an intensive level HRE would be required.

Instead, the proposed amendment has been changed to clearly exclude accessory structures, not identified as a cultural resource, from having to undergo an intensive level HRE process. As such, the proposed amendments pertaining to the HRE requirements are limited to the following sections (sections 2.65(e)(3) – Properties 45 Years or Older and 2.65(e)(3)(A) – Applicability):

"(3) Properties 45 Years or Older. A certificate of appropriateness may be required for demolition of a building or structure**, excluding any accessory structure,** that is 45 years or older, and not identified as a cultural resource. The purpose of this subsection is to ensure that such buildings and structures are properly evaluated prior to their demolition or removal.
(A) Applicability. Any proposed project submitted to the ~~**planning and building department**~~ **Community Development Department** that includes the demolition or removal of a building or structure**, excluding any accessory structure,** that was

constructed at least 45 years prior to the date of application for such project shall file a notice of intent to demolish in a form approved by the director. The determination as to whether a property is a cultural resource shall require a **~~deposit~~** **historical resource evaluation fee** by the applicant to cover city costs associated with hiring a historic consultant and/or an architectural historian; and/or a deposit to cover the costs associated with the preparation of an initial study, environmental impact report, mitigated negative declaration or negative declaration."

Revised Amendments

Please note the proposed changes are shown from the original amendments presented to CHC on February 20, 2025 in Attachment 1 as denoted in black-colored font featuring **Bold Underline** for text additions and **~~Bold Strikethrough~~** for text deletions. Those presented in **red-colored font** are the newly recommended changes from staff based on the feedback provided during the City Council meeting and further analysis as discussed in the sections above.

Attachments:

1. Draft Ordinance – Proposed Amendments to SPMC Chapter 2, Article IVH (Cultural Heritage Commission)

From: Debi Howell-Ardila
To: PlanningComments
Subject: Public comment, CHC Agenda, Item #7
Date: Thursday, May 15, 2025 5:59:18 PM

CAUTION: This email originated from outside of the City of South Pasadena. Do not click links or open attachments unless you recognize the sender and know the content is safe.

CAUTION: This email originated from outside of the City of South Pasadena. Do not click links or open attachments unless you recognize the sender and know the content is safe.

Dear Planning staff--

I'm writing in support of CHC Agenda Item #7. In my opinion, as rewritten and recast, these refinements will help streamline our Cultural Heritage Ordinance while also retaining important provisions we added when we (as a CHC--I'm a former member) updated our ordinance.

I also wanted to thank (and commend) the Planning staff for taking an inclusive approach as they were looking for the appropriate way to refine the code. I had presented comments and a few concerns during the City Council's 2nd reading of the ordinance, and based on that feedback, Council remanded the item back to the CHC. Following the CHC hearing, Planning staff reached out to me to schedule a call, and we talked through the options and various concerns. The compromise solution they have crafted is very good, and this model for public outreach is appreciated.

Sincerely,
-Debi Howell-Ardila
Former CHC member (2012-2018)

--
Debi Howell-Ardila, MHP
Historic Preservation Consulting Services
(e) debihowell@gmail.com
(c) 626.524.1917

City Council Agenda Report

ITEM NO. 11

DATE: June 18, 2025

FROM: Todd Hileman, City Manager

PREPARED BY: Tina Lopez, Human Resources & Risk Manager

SUBJECT: **CONSIDERATION OF A RESOLUTION APPROVING THE SALARY ADJUSTMENT AND UPDATED SALARY RANGE FOR THE CIVIL ENGINEERING ASSISTANT, SENIOR CIVIL ENGINEER, AND SENIOR HUMAN RESOURCES ANALYST AND APPROVING THE ALLOCATION OF FUNDS FROM MULTIPLE FUNDS AND VACANT POSITIONS TO SUPPORT THE PERSONNEL REQUESTS**

Recommendation

It is recommended that the City Council consider adoption of the proposed Resolution to:

1. Approve the salary adjustment and updated salary range for the Civil Engineering Assistant;
2. Approve the salary adjustment and updated salary range for the Senior Civil Engineer;
3. Approve the salary adjustment and updated salary range for the Senior Human Resources Analyst; and
4. Authorize the allocation of funds from the Special/Enterprise Funds and the General Fund to support the changes.

Executive Summary

This item seeks City Council consideration of a resolution to approve salary adjustments and updated salary ranges for the classifications of Civil Engineering Assistant, Senior Civil Engineer, and Senior Human Resources Analyst. These adjustments are the result of a strategic review conducted by the City Manager to evaluate operational needs, organizational structure, and workforce challenges within the Public Works Department and Human Resources Division.

The proposed changes aim to enhance the City's ability to recruit and retain qualified staff in key positions, support internal equity, and improve alignment with market salary data. Funding for these adjustments will be provided through existing appropriations, including multiple departmental funds and savings from current vacant positions. No additional General Fund resources are required.

Approval of this resolution will support the City's broader goals of organizational effectiveness, service delivery, and workforce development.

Background

As part of the City's ongoing commitment to improving organizational efficiency, service delivery, and workforce development, the City Manager conducted a strategic review of

operational and staffing needs within the Public Works Department and the Human Resources Division. This comprehensive review evaluated a range of factors, including current workload demands, supervisory structures, service expectations, and ongoing challenges related to recruitment and retention.

The review identified key classifications—Civil Engineering Assistant, Senior Civil Engineer, and Senior Human Resources Analyst—as critical to the effective delivery of public services and internal support functions. However, it also revealed that the current salary ranges for these positions are misaligned with regional market data and internal equity standards, contributing to difficulties in attracting and retaining qualified candidates.

In response to these findings, staff are recommending updates to the salary ranges for the affected classifications. These adjustments are designed to improve the City's competitiveness in the labor market, address internal compensation alignment, and ensure long-term organizational stability in essential operational areas.

Funding to support the proposed adjustments has been identified through existing appropriations, including multiple departmental funds and salary savings from current vacant positions.

Analysis
The recommended salary range updates address current operational needs and support the City's ability to retain and attract qualified candidates for key technical and professional roles. Each position has been reviewed to ensure its compensation aligns with the level of responsibility, complexity, and industry expectations.

Civil Engineering Assistant
The Civil Engineering Assistant performs a wide range of technical and project coordination duties in support of public infrastructure and development projects. The position assists in preparing plans, reviewing designs, inspecting construction, and responding to public inquiries. The updated salary range reflects the technical expertise and field knowledge required, as well as the need to remain competitive with similar comparable agencies.

- Current Range:
  - $74,196 - $90,192
- Proposed Range:
  - $79,684 - $96,857
- Funding Source:
  - Fund 101 - 30%
  - Fund 210 - 20%
  - Fund 230 - 30%
  - Fund 239 - 5%
  - Fund 500 - 15%

Senior Civil Engineer
The Senior Civil Engineer is responsible for managing large-scale infrastructure projects, overseeing consultant contracts, performing complex engineering analyses, and providing direction to engineering staff. This position plays a lead role in planning, design, permitting, and construction management. The proposed salary range adjustment accounts for the high level of responsibility, supervisory duties, and the challenge of recruitment in a competitive labor market.

- Current Range:
  - $91,368 - $122,448
- Proposed Range:
  - $106,676 - $142,958
- Funding Source:
  - Fund 101 - 30%
  - Fund 210 - 40%
  - Fund 215 - 5%
  - Fund 239 - 5%
  - Fund 500 - 20%

Senior Human Resources Analyst

The Senior Human Resources Analyst handles advanced-level duties in areas such as employee and labor relations, classification and compensation, benefits administration, and compliance with state and federal regulations. This position is often tasked with managing high-impact projects, interpreting complex employment laws, and advising management of personnel policies. The revised salary range reflects the position's strategic role in City operations and the level of expertise required to perform these critical functions effectively.

- Current Range:
  - $77,340 - $103,644
- Proposed Range:
  - $95,891 - $116,567
- Funding Source:
  - Fund 101 - 85%
  - Fund 500 - 15%

Each proposed range adjustment will provide improved alignment with industry standards and internal equity, while addressing the City's long-term staffing needs. The estimated cost is further described in the Fiscal Impact section of this report.

Alternatives

1. Approve only a portion of the proposed salary adjustments.
2. Defer action and direct staff to conduct further review.
3. Decline to approve the adjustments and maintain current ranges.

Fiscal Impact

The proposed personnel actions create a net increase of approximately $40,098 to be distributed between Special/Enterprise and General Funds. The proposed salary adjustments will be funded through existing appropriations and departmental salary savings.

Position	Net Increase	Funding Sources
Civil Engineering Assistant	$6,665	Fund 101 - 30% ($2000) Fund 210 - 20% ($1,333) Fund 230 - 30% ($2,000) Fund 239 - 5% ($333) Fund 500 - 15% ($1,000)

Senior Civil Engineer	$20,510	Fund 101 - 30% ($6,153) Fund 210 - 40% ($8,204) Fund 215 - 5% ($1,026) Fund 239 - 5% ($1,026) Fund 500 - 20% (4,102)
Senior Human Resources Analyst	$12,923	Fund 101 - 85% ($10,985) Fund 500 - 15% ($1,938)
Total Estimated Cost	$40,098	Distributed per allocations above Fund 101 - $19,137 Fund 210 - $9,537 Fund 215 - $1,026 Fund 230 - $2,000 Fund 239 - $1,359 Fund 500 - $7,040

Final costs may vary depending on the selected candidates' experiences and actual placement within the range and these positions will be appropriately funded in the FY2025-26 budget.

Key Performance Indicators and Strategic Plan
These items align with the City Council's priority 5, to work with the City Manager and establish improved operational efficiencies.

Attachment:
Attachment No. 1 - Proposed Resolution
Attachment No. 2 - Proposed Salary Range

Attachment No. 1

RESOLUTION NO. __

A RESOLUTION OF THE CITY COUNCIL OF THE CITY OF SOUTH PASADENA, CALIFORNIA ADOPTING A SALARY ADJUSTMENT AND UPDATING THE SALARY RANGE FOR THE CIVIL ENGINEERING ASSISTANT, SENIOR CIVIL ENGINEER AND SENIOR HUMAN RESOURCES ANALYST

WHEREAS, the City wishes to approve a salary adjustment and update the salary range for the Civil Engineering Assistant,

WHEREAS, the City wishes to approve a salary adjustment and update the salary range for the Senior Civil Engineer,

WHEREAS, the City wishes to approve a salary adjustment and update the salary range for the Senior Human Resources Analyst,

NOW, THEREFORE, THE CITY COUNCIL OF THE CITY OF SOUTH PASADENA, CALIFORNIA, DOES RESOLVE, DECLARE, DETERMINE AND ORDER AS FOLLOWS:

SECTION 1. The salary range for the Civil Engineering Assistant, Senior Civil Engineer and Senior Human Resources Analyst as set forth in Exhibit A is hereby adopted.

SECTION 2. The City Council hereby approves the allocation of funds as described in the June 18, 2025, City Council agenda report for this matter to support the personnel changes and updated salary ranges.

SECTION 3. This resolution shall take effect immediately upon its adoption.

PASSED, APPROVED AND ADOPTED on this 18th day of June 2025.

_____
Janet Braun, Mayor

ATTEST:

_____
Hector Gomez, Chief City Clerk

APPROVED AS TO FORM:

_____
Roxanne Diaz, City Attorney

I HEREBY CERTIFY the foregoing resolution was duly adopted by the City Council of the City of South Pasadena, California, at a regular meeting held on the 18th day of June 2025, by the following vote:

AYES:

NOES:

ABSENT:

ABSTAINED:

_____
Hector Gomez, Chief City Clerk

EXHIBIT A

SALARY RANGE

Proposed Salary Range

POSITION TITLE	BARGAINING UNIT	STEP A	STEP B	STEP C	STEP D	STEP E	STEP F	STEP G
Civil Engineering Assistant	PSEA	$ 79,684	$ 83,669	$ 87,852	$ 92,245	$ 96,857		
		$ 6,640	$ 6,972	$ 7,321	$ 7,687	$ 8,071		
		$ 38.31	$ 40.23	$ 42.24	$ 44.35	$ 46.57		
Senior Civil Engineer	Unrepresented	$ 106,676	$ 112,010	$ 117,610	$ 123,490	$ 129,665	$ 136,148	$ 142,958
		$ 8,890	$ 9,334	$ 9,801	$ 10,291	$ 10,805	$ 11,346	$ 11,913
		$ 51.29	$ 53.85	$ 56.54	$ 59.37	$ 62.34	$ 65.46	$ 68.73
Senior Human Resources Analyst	Unrepresented	$ 95,891	$ 100,685	$ 105,720	$ 111,006	$ 116,556	$ 122,384	$ 116,567
		$ 7,991	$ 8,390	$ 8,810	$ 9,250	$ 9,713	$ 10,199	$ 9,714
		$ 46.10	$ 48.41	$ 50.83	$ 53.37	$ 56.04	$ 58.84	$ 56.04

City Council Agenda Report

ITEM NO. 12

DATE: June 18, 2025

FROM: Todd Hileman, City Manager

PREPARED BY: H. Ted Gerber, Former Public Works Director
Bassam AL-Beitawi, Transportation Program Manager

SUBJECT: **CONSIDERATION OF APPROVAL OF AN AMENDMENT TO A PROFESSIONAL SERVICES AGREEMENT WITH KOA CORPORATION, A LOCHNER COMPANY, FOR ENGINEERING DESIGN SERVICES RELATED TO THE NORTH-SOUTH CORRIDOR INTELLIGENT TRANSPORTATION SYSTEM (ITS) DEPLOYMENT PROJECT IN A NOT TO EXCEED AMOUNT OF $1,137,574**

Recommendation

It is recommended that the City Council consider approval of an amendment (Attachment 1) of an existing Professional Services Agreement (Attachment 2) with KOA Corporation, a Lochner Company, to provide engineering design services to support the City's North-South Corridor Intelligent Transportation System (ITS) Deployment Project, Project No. 002002 (2020-02), Federal Project No. RABA01-5071(024), in a not-to-exceed amount of $1,137,574.

Executive Summary

This item adjusts the scope and fee for an existing professional services agreement with KOA Corporation via a contract amendment, in order to align the consultant's tasks with the design needs of the City's North-South Corridor Intelligent Transportation System (ITS) Deployment Project (Project).

Background

In 2021, the City Council awarded a professional services agreement (Agreement) to KOA in an amount not-to-exceed $788,483 for design engineering services for the North-South Corridor Intelligent Transportation System (ITS) Deployment Project No. 2020-02 (now referred to as Project No. 002002). The Project included the construction of various intelligent transportation system (ITS) infrastructure, including the upgrade of traffic signals along the Fair Oaks Avenue corridor to install new traffic signal poles and mast arms, new signal heads, illuminated LED street name signs, and detection and monitoring systems for bike, pedestrian, and vehicles, as well as adaptive pedestrian crossing implementation, emergency vehicle detection, and transportation system prioritization.

In addition to the ITS installation, the Project included reconstruction of curb ramps and crosswalks to satisfy ADA compliance requirements and increase pedestrian safety at intersections. Some median nose narrowing reconstruction was also included at several locations to offset opposing left turning vehicles for better visibility of oncoming traffic.

The primary funding for the Project is a $9,343,563 million federal grant received in 2004 from the Federal Highway
Administration through the Rogan Funds Bill No. HR 5394, which requires an approximate $1,210,557 match from the City, as the federal contribution is 88.53% of the Project total.

Analysis
Design work on the Project has been underway for approximately two years, during which the scope has changed from the originally proposed effort. For example, the initial proposed Project, in its pre-2021 form, included the installation of changeable message signs (CMS) installed with the City - meant to relay real-time travel information and alternative route directions to the motorists. The current Project team determined that the installation of CMS along City roadways would not be the best alternative for the community, nor are CMS the most current technology given the type of in-vehicle navigation systems presently available.

Another modification included adding ITS fiber optic cabling from City Hall to the Public Works facility on Garfield Avenue. At present, the City's ITS fiber systems (installed in 2022) run from the City's boundaries at the intersection of Fair Oaks Avenue and Columbia Street to City Hall, and the intersection of Fremont Avenue and Alhambra Road to City Hall, where the City's Traffic Management Center (TMC) operates from the City Hall basement. To facilitate improved system access for Public Works staff, critical redundancy of the TMC, and potential future reconstruction at City Hall, extending the fiber cabling to the Garfield Avenue facility is a prudent addition to the Project scope, and can be completed within the available budget.

Other updates to the Project include addressing curb, ramp, catch basin, and bulb-out modifications at locations along Fair Oaks Avenue and Huntington Drive to improve pedestrian and/or bicycle access, and coordinate future improvements of other roadways including Mission Street and Columbia Street that have been contemplated in other design panning efforts, such as the Toole Design charrettes. There are also elements of the Project scope that are being removed to be serviced by an alternate vendor, such as the traffic signal coordination work. A summary and tabulation of the updated work are provided in the amendment exhibits (Attachment 1) as they related to the original scope of the Agreement (Attachment 2), and a scope adjustment memo that was issued after the Project was awarded by City Council (Attachment 3).

The design process was significantly extended due to necessary coordination with the Federal Highway Administration and Caltrans, particularly as it relates to Project scope eligibility and environmental review and approvals. As a result, another new Project component includes a required Historic Resources Evaluation Report for seventeen buildings along the corridor.

In total, the scope changes require a $245,675 contract adjustment, which is well within the design budget for the $10+ million dollar Project. In addition, a 10% contingency of $103,416 is being added to the contract, which is subject to written authorization by the City in advance of any contingency use or payment.

Fiscal Impact
In addition to the contracted $788,483 design fee, the 2021 staff report identified a design contingency of 10% percent in the amount of $78,848 for a total amount of $867,331 available design budget. Considering the 88.53% federal share, the original Project budget allocation in the 2021 staff report consisted of:

- $450,000 from the Capital Growth Fund 255
- $9,343,563 from the Rogan Grant Fund 214
- $1,410,000 from the Designated General Fund Reserve for the Rogan match (which was referred to as Fund 104 in the staff report, however, is programmed as Fund 108)

In the Fiscal Year (FY) 2024-2025, the adopted capital improvement program (CIP) budget for this Project was $1,228,848, of which approximately $350,000 is projected to be expended. Therefore, for work that will be completed in the remainder of FY 2024-2025, the Project budget is adequate, and no new appropriation is required. For FY 2025-2026, a budget of $1,265,920 is expected to be adopted, including the 2024-2025 carryover. Therefore, adequate budget for this amended contract of $1,137,574 (of which approximately $300,000 has already been expended) is available in the FY 2024-2025 adopted and FY 2025-2025 proposed CIP budgets.

Key Performance Indicators and Strategic Plan
This item is related to street improvement goals in the City Council's 2025 compilation of priorities, number 2(a).

Commission Review and Recommendation
This Project has been discussed at multiple meetings of the former Mobility and Infrastructure Transportation Commission throughout its development.

Public Notification
The public was made aware that this item was to be considered this evening by virtue of its inclusion on the legally publicly noticed agenda, posting of the same agenda and reports on the City’s website.

Environmental Analysis
As the Project is in the planning and design phase, California Environmental Quality Act (CEQA) analysis is currently being conducted as part of KOA's scope of work.

Attachment:
Attachment No. 1 - Proposed Amendment to PSA with KOA
Attachment No. 2 - Existing Professional Services Agreement (PSA) with KOA
Attachment No. 3 - Memorandum of KOA's Supplementary Scope of Work

FIRST AMENDMENT TO
PROFESSIONAL SERVICES AGREEMENT

THIS AMENDMENT ("Amendment") is made as of this 18th day of June 2025, by and between the CITY OF SOUTH PASADENA ("City") and KOA CORPORATION, A LOCHNER COMPANY ("Consultant").

RECITALS

WHEREAS, on August 18, 2021, the City and Consultant entered into a Professional Services Agreement ("Agreement") for the Consultant to provide engineering design services for the North-South Corridor Intelligent Transportation System (ITS) Deployment Project, Project No. 2020-02, Federal Project No. RABA01-5071(024) for a not-to exceed amount of Seven Hundred Eighty-Eight Thousand Four Hundred Eighty-Three Dollars ($788,483).

WHEREAS, the City and Consultant have negotiated an adjustment to the previously scoped professional engineering services for the North-South Corridor Intelligent Transportation System (ITS) Deployment Project, Project No. 2020-02, Federal Project No. RABA01-50781(024), including:

- Additional design for a fiber optic line between City Hall and the Garfield Avenue Public Works Building for the traffic control system;
- Additional design modifying median islands on Fair Oaks Avenue to improve visibility for left-turning motorists;
- Additional design for improved pedestrian crossing traffic control at the Spruce Street / Fair Oaks Avenue intersection;
- Additional design of curb extension modifications and landscaping at selected intersections on Fair Oaks Avenue;
- Additional design of a cul-de-sac for the west approach of Grevelia Street at Fair Oaks Avenue;
- Additional redesign of Huntington Drive/Fair Oaks Avenue intersection to improve pedestrian safety;
- Additional signing & striping designs for new bike lanes on Huntington Drive and on Monterey Road;
- Limiting traffic signal timing adjustments to signal phase durations rather than signal coordination;
- Additional Environmental Historic Resources Evaluation Report;
- Deletion of design for new changeable message signs intended for relaying real-time travel information and alternative route directions to motorists; and
- Deletion of design for installing decorative traffic signal poles.

WHEREAS, Consultant's subconsultant, ASM Affiliates (ASM), is requesting an amendment to evaluate 17 buildings as part of the cultural resources compliance ASM is providing in support of the North-South Corridor Intelligent Transportation System Deployment Project on Fair Oaks Avenue. Caltrans has requested these evaluations to be included in the Historic Resources Evaluation Report, one of the four Caltrans formatted reports ASM is providing to comply with the National Environmental Protection Act (NEPA) and the National Historic Preservation Act (NHPA).

NOW THEREFORE, THE CITY AND THE CONSULTANT AGREE AS FOLLOWS:

1. MAXIMUM AMOUNT. That Section 3.5 of the Agreement is hereby amended to read as follows:

> The highest total compensation and costs payable to the Consultant by the City under this Agreement. The Maximum Amount under this Agreement is: One-Million, One-Hundred and Thirty-Seven Thousand, and Five-Hundred and Seventy-Four Dollars ($1,137,574), including the original $788,483 fee, an additional fee of $245,675, and a 10% contingency of $103,416, which is subject to written authorization by the City to the Consultant in advance of any contingency use or payment.

2. COMPENSATION. That Section 7.1 of the Agreement is hereby amended to read as follows:

> General. City agrees to compensate Consultant for the services provided under this Agreement, and Consultant agrees to accept payment, in an amount not to exceed the compensation set forth and described in Exhibit B of the Agreement ("Compensation"). In no event shall the Compensation paid to Consultant not exceed the Maximum Amount. Consultant shall not be reimbursed for any contingency, expenses, or additional services unless provided for in this Agreement, or authorized in writing by City in advance.

3. PROVISIONS OF AGREEMENT. All other terms, conditions, and provisions of the Agreement to the extent not modified by this Amendment, shall remain in full force and effect.

4. EXHIBIT A. Exhibit A attached to this Amendment shall amend the Exhibit A attached to the Agreement.

5. EXHIBIT B. Exhibit B attached to this Amendment shall amend the Exhibit B attached to the Agreement.

EXHIBIT A

Amended Scope of Work

Amend Task 3 Design Development (PS&E):

- The Consultant shall prepare plans and specifications, to be submitted with the 50% Submittal, 90% Submittal, and 100% Submittal, for the following:
    - Curb ramp modifications of existing curb ramps that currently do not conform with Americans with Disabilities Act standards for non-signalized intersections at Lyndon Street and Laurel Street.
    - A new sidewalk along the west side of Fair Oaks Avenue south of the northbound 110 Freeway off-ramp to close the westbound approach of Grevelia Street to Fair Oaks Avenue, with a drainage culvert and associated curb ramp relocations.
    - Bulbout modifications that remove the existing curb extensions into the eastbound approaches to Fair Oaks Avenue at Hope Street, Mission Street, El Centro Street, and Oxley Street, and the westbound approaches to Fair Oaks Avenue at Hope Street, El Centro Street, and Oxley Street.
    - Bulbout modifications to accommodate landscaped planters for the southbound Fair Oaks Avenue approaches to Hope Street, Mission Street, El Centro Street, Oxley Street, and Monterey Road, for the northbound Fair Oaks Avenue approaches to Hope Street and Oxley Street, and for the eastbound Monterey Road approach to Fair Oaks Avenue, with associated irrigation. The new landscaping is not intended to capture, treat, and infiltrate stormwater. Additional survey shall be required for these locations.
    - Catch basin modifications for the existing County-owned catch basins on Mission Street's south side west of Fair Oaks Avenue, Fair Oaks Avenue's west side north of Hope Street, and Fair Oaks Avenue's west side north of Mission Street, with hydraulic analysis as needed by the County Public Works Department. The cost of permit fees is excluded.
    - Catch basin modifications for the existing City-owned catch basin on Fair Oaks Avenue's west side north of El Centro Street.
    - Median island modification for north-south approaches to the Fair Oaks Avenue intersections at Lyndon Street, Bank Street, Laurel Street, and Spruce Street to reduce offsets in the alignment of left turn lanes that obscure visibility of oncoming vehicles., and in the case of Fair Oaks Avenue north of Spruce Street, the provision of a pedestrian refuge space in the median. Additional survey shall be required for these locations.
    - Median island modification for the southbound approach of Fair Oaks Avenue to Rollin Street to replace the former left turn lane with landscaping, with associated modification to irrigation.
    - Design of traffic control devices intended to improve pedestrian safety at the marked crosswalk across the north leg of Fair Oaks Avenue at Spruce Street, such as solar-powered beacons or illuminated warning signs.
    - A new curb ramp on the north side of Huntington Drive west of Fair Oaks Avenue, and modification to the sidewalk within the triangular island on the northwest quadrant of the

intersection of Huntington Drive and Fair Oaks Avenue to match the grade of the new curb ramp. Landscape and irrigation design shall be required to replace landscaping due to the curb ramp and sidewalk construction that includes removal of an existing fern pine. Additional survey shall be required at this location.

- A new bulbout with curb ramp on the south side of Huntington Drive west of Fair Oaks Avenue to accommodate the crosswalk that replaces the two-stage signalized pedestrian crossing on the east side of the intersection.
- Additional survey shall be required for this location.
- Signing and striping adjustments to the modified eastbound approaches to Fair Oaks Avenue at the 110 Freeway northbound off-ramp, Grevelia Street, Hope Street, Mission Street, El Centro Street, and Oxley Street, and the modified eastbound approaches to Hope Street, El Centro Street, and Oxley Street, and to the northbound and southbound left turn lanes at Lyndon Street, Bank Street, Laurel Street, and Spruce Street.
- Signing and striping plans to accommodate an eastbound bike lane on Monterey Road immediately west and east of Fair Oaks Avenue, a westbound bike lane on Huntington Drive immediately east and west of Fair Oaks Avenue, edge-striped buffers through the westbound-to-northbound and southbound-to-westbound roadway channels at the Huntington Drive/Fair Oaks Avenue intersection, and reduced lane widths for Huntington Drive at Fair Oaks Avenue.
- Median island modification for the center of Huntington Drive immediately east and west of Fair Oaks Avenue to accommodate the relocation of the crosswalk from the east side to the west side of Fair Oaks Avenue to a new westbound bike lane. Additional survey shall be required for this location.
- The consultant shall collect pedestrian and traffic counts at the intersection of Spruce Street and Fair Oaks Avenue to support the implementation of traffic control devices intended to improve pedestrian safety at the marked crosswalk across the north leg of that intersection.
- Design of changeable message sign and decorative traffic signal poles, and the provision of traffic signal coordination parameters is excluded from these Scope of Services.

Amend Task 4 Quality Assurance/Quality Control:

- Statement of Peer Review is deleted from the Task 4 Deliverables

Amend Task 5 Environmental:

- ASM's original scope of work in 2021 excluded any building evaluations. The City and ASM conferred during the initial scoping and exclude that work due to the findings of the comprehensive City of South Pasadena Historic Resources Survey (June 2017), and the understanding that similar approaches to identifying historic properties had been approved for other Caltrans District 7 projects reviewed by the California Office of Historic Preservation. Caltrans has determined that the citywide survey findings are insufficient to identify historic properties in this Project's HRER.

- Therefore, ASM shall now evaluate 17 buildings within the Area of Potential Effect (APE) for eligibility for the National Register of Historic Places (NRHP). These buildings were previously evaluated as South Pasadena landmarks in a local survey, but were not fully documented nor evaluated for the NRHP. The evaluations shall be added to the Historic Resources Evaluation Report (HRER), which follows Caltrans report guidelines, specifically Exhibit 6.5 Historic Resources Evaluation Report Format and Content Guide (April 2020). ASM's Architectural Historian and one Archaeologist shall conduct a limited additional pedestrian survey from the public right-of-way as necessary to augment the prior survey of these building for the purpose of assessment effects/impacts from the project. ASM shall conduct archival research using primary and secondary sources to develop a site-specific history for each building, and update sources consulted in the Research Methods and References Cited sections of the HRER. ASM shall refer to the significant themes identified in the historic context of the City of South Pasadena Historic Resources Survey to assess whether a property meets the registration requirements established therein under NRHP Criteria A or C. ASM shall contact South Pasadena Preservation to solicit their input as part of our assessment of association with historically significant individuals under NRHP Criterion B.
- ASM shall then document and evaluate the 17 properties on California Department of Parks and Recreation (DPR) A (Primary) and BSO (Building Structure Object) forms. Sections of the HRER, including Description of Historic Resources, Resource Significance sections, as well as the Summary of Findings/Findings and Conclusions sections, shall also be updated.
- The analysis and reports shall be prepared by ASM's Architectural Historians who meet the Secretary of the Interior's Professional Qualification Standards.
- This scope includes small additional survey work, archival research, analysis and preparing the evaluations sections of the HRER, and 17 DPR sets, and is based upon the following assumptions:
    - Not more than 17 buildings require evaluation;
    - Not more than 120 hours of archival research is required; and
    - No additional deliverables are included as the evaluations shall be added to the Second Draft HRER.
- ASM shall prepare the Second Draft HRER with DPRs as an attachment by mid-June 2025, to allow sufficient time for subsequent review by Caltrans of the full suite of cultural resource documents.

Schedule

- June 18, 2025 Approval of Amendment.
- Consultant shall submit the 50% Submittal by August 17, 2025.
- City shall provide comments to Consultant on the 50% Submittal by September 1, 2025.
- Consultant shall submit the 90% Submittal by September 21, 2025.
- City shall provide comments to Consultant on the 90% Submittal by September 30, 2025.
- Consultant shall submit the 100% Submittal by October 19, 2025.
- City shall provide comments to Consultant on the 100% Submittal by October 27, 2025.
- Consultant shall submit the Final Submittal by November 3, 2025.

EXHIBIT B

Amended Project Fees

In addition to the $206,946 in fees amended to the original contract Maximum Amount of $788,483 (as shown in Tables 1, 2, & 3 below), an additional fee of $38,729 is added to include additional scope of work for KOA (Consultant) Subconsultant ASM Affiliates for a Historic Resources Evaluation Report.

Note: The Amended Project Fees do not include the $78,848 "10% of Base Design Services Contingency" that is listed in the Tables below.

Table 1: Summary of Amended Costs

	Base Services	Amendment #1									Overall
KOA	Approved Sept 2021	KOA	JMD	Gruen	CWE	KDM Meridian	Impact Sciences	ASM	Safe Probe	Amend-ment Subtotal	With amend-ments
Task 1: Background Research											
Background Research	**$14,231**										**$14,231**
Field Check and Data Collection	**$44,200**										**$44,200**
Survey	**$59,148**					$20,000				**$20,000**	**$79,148**
Task 2: Project Management Services											
Project Meetings/Public Outreach	**$61,569**										**$61,569**
Project Schedule	**$15,674**										**$15,674**
Task 3: Design Development (PS&E)											
Preliminary Design (30%)	**$214,716**	$131,902	-$31,558	$33,902	$47,700					**$181,946**	**$396,662**
Preliminary Design (50%)	**$46,974**										**$46,974**
Preliminary Design (90%)	**$32,502**										**$32,502**
Final Design (100%)	**$49,534**										**$49,534**
Bid Documents	**$12,439**	$10,000								**$10,000**	**$22,439**
Bidding Services	**$23,428**										**$23,428**
Task 4: QA/QC											
QA/QC	**$33,270**	-$5,000								**-$5,000**	**$28,270**
Task 5: Environmental											
Historical/Cultural Studies	**$56,612**										**$56,612**
Environmental Documentation	**$84,646**										**$84,646**
Task 6: Utility Coordination											
Coordinations	**$26,983**										**$26,983**
Permit Facilitations	**$12,557**										**$12,557**
SUBTOTAL DESIGN SERVICES	**$ 788,483**	$136,902	$(31,558)	$33,902	$47,700	$ 20,000	$ -	$-	$ -	**$206,946**	**$995,429**
Contingency											
10% of Base Design Services	**$78,848**										**$78,848**
TOTAL SERVICES	**$ 867,331**									**$206,946**	**$1,074,277**

Table 2: Amended Costs by Firm and by Task

South Pasadena North-South ITS Deployment Engineering Services				
5/20/2025 18:27	by Walter Okitsu			
	Existing Budget	Billed as of 3/31/25	Proposed Changes	Notes
KOA Contract Amount, Sept 2021	$ 867,331		$ 128,098	
Less 10% contingency	$ (78,848)			
KOA Budget	$ 788,483	$ 344,509	$ 206,946	Proposed change exceeds contingency
By Firm				
KDM survey	$ 59,148	$ 53,808	$ 20,000	deduct for CMS, add for bulbouts & medians
SafeProbe pot hole	$ 137,560		$ -	deduct ornamental poles add for fiber run
JMD changeable message signs	$ 31,558		$ (31,558)	deduct for CMS
Impact Sciences environmental	$ 76,471	$ 43,141		
ASM historic	$ 53,342	$ 26,309		
Survey Counts traffic counts	$ 9,960	$ 9,960	$ 1,000	for Spruce St
Landscape specialist	$ -		$ 33,902	for planters and median
Catch basin specialist	$ -		$ 47,700	for catch basin mods
KOA excluding subs	$ 420,444	$ 211,291	$ 135,902	net change after credits
By Task	Existing Budget	Billed as of 3/31/25	Proposed Changes	Notes
Task 1.1 - Background Research	$ 14,231	$ 14,161		
Task 1.2 - Field Check and Data Collection	$ 44,200	$ 44,200		
Task 1.3 - Survey - KDM Meridian	$ 59,148	$ 53,808	$ 20,000	KDM
Task 2.1 Project Meetings / Public Outreach	$ 61,569	$ 50,518		
Task 2.2 Project Schedule	$ 15,673	$ 5,629		
Task 3.1 Preliminary Design (30%)	$ 77,155	$ 77,154		
Task 3.2 Potholing - Safe Probe	$ 137,560	$ 1,428		
Task 3.3 Preliminary Design (50%)	$ 46,974	$ 39,157	$ 213,502	KOA, CWE, Gruen
Task 3.4 Preliminary Design (90%)	$ 32,502			
Task 3.5 Final Design (100%)	$ 17,978			
Task 3.6 CMS Design - JM Diaz	$ 31,556		$ (31,556)	JMD
Task 3.7 Bid Documents	$ 12,439		$ 10,000	KOA
Task 3.8 Bidding Services	$ 23,428			
Task 4.1 QA / QC	$ 33,270	$ 2,975	$ (5,000)	KOA
Task 5.1 Historical / Cultural Studies - KOA	$ 3,270	$ 3,270		
Task 5.2 Historical / Cultural Studies - ASM	$ 53,342	$ 26,309		
Task 5.3 Environmental Documentation KOA	$ 8,175	$ 8,005		
Task 5.4 Environmental Documentation - IS	$ 76,471	$ 43,141		
Task 6.1 Utility Coordinations	$ 26,983	$ 1,706		
Task 6.2 Permit Facilitations	$ 12,557	$ -		
	$ 788,481	$ 371,461	$ 206,946	

Table 3: Amended Costs by Location

Proposed design scope changes	Proposed Changes	Notes	General or elsewhere	Columbia St	State St SR110	Grevelia St SR110	Hope St	Mission St	El Centro St	Oxley St	Monterey Rd	Lyndon St	Bank St	Rollin St	Oak St	Laurel St	Spruce St	Huntington Dr
Task 1.3 Additional survey	$ 20,000	KDM for bulbout modifications, new curb ramps, and median shifts. Credit for	-$4,000				$2,000	$2,000	$2,000	$2,000	$2,000	$2,000	$2,000			$2,000	$2,000	$6,000
Task 3.3 Additional curb ramp (excluding those within bulbouts)	$ 12,000	Includes Huntington sidewalk adjustment and tree removal		$4,000														$8,000
Task 3.3 Grevelia cul-de-	$ 13,000					$13,000												
Task 3.3 Bulb out and	$ 91,000						$23,000	$10,000	$17,000	$23,000	$3,000		$5,000					$10,000
Task 3.3 Catch basin	$ 47,700	CWE					$12,000	$14,700	$12,000	$9,000								
Task 3.3 Fiber optic design	$ 25,000	Excludes system integration and City's internal IT staff effort. Transfer pot holes for new ornamental poles to fiber	$25,000															
Task 3.3 Landscape	$ 33,902	Gruen					$6,000	$4,000	$4,000	$6,000	$4,000			$3,000				$6,902
Task 3.3 Median modification	$ 34,500	Median narrowing and shifting										$8,000		$4,000		$8,000	$8,000	$6,500
Task 3.3 New ornamental poles	$ (16,500)	Delete from scope (fewer poles, transfer potholes to fiber run)	-$16,500															
Task 3.3 Signing & striping design	$ 21,900	Excludes traffic handling or detour plans		$600		$6,500	$600	$600	$600	$600	$3,000	$600	$600	$600		$600	$2,000	$5,000
Task 3.3 Spruce Street crosswalk treatment	$ 6,000	Includes traffic counts, design of otential beacon or warning sign illumination															$6,000	
Task 3.3 Traffic signal sychronization	$ (55,000)	No signal synchronization: signal timing effort is limited to phase timing modifications	-$55,000															
Task 3.3 Changeable	$ (31,556)	Deprioritized	-$31,556															
Subtotal Task 3.3		$ 181,946																
Task 3.7 Bid Documents	$ 10,000	Increase specs and estimates (mostly civil)	$10,000															
Task 4.1 QA/QC	$ (5,000)	Delete Statement of Peer Review	-$5,000															
Task 5.2 Historical/Cultural	$ -																	
Task 5.4 Environmental: Impact Sciences	$ -																	
NET INCREASE:	$ 206,946		-$77,056	$4,600	$0	$19,500	$43,600	$31,300	$35,600	$40,600	$12,000	$10,600	$7,600	$7,600	$0	$10,600	$18,000	$42,402

TO EFFECTUATE THIS AMENDMENT, the parties have caused their duly authorized representatives to execute this Agreement on the dates set forth below.

"City" City of South Pasadena	"Consultant" KOA Corporation, A Lochner Company
By:_____ *Signature*	By:_____ *Signature*
Printed:_____	Printed: Giuseppe Canzonieri
Title:_____	Title: Principal
Date:_____	Date: 6/4/2025

ATTEST:

By:_____

Hector Gomez, Chief City Clerk

Approved as to form:

By: _____

Roxanne Diaz, City Attorney

Date: _____

DocuSign Envelope ID: C5BA92C6-E12F-4B61-8A71-5D7114C08DA5

PROFESSIONAL SERVICES AGREEMENT FOR DESIGN PROFESSIONALS

(City of South Pasadena / KOA Corporation)

1. IDENTIFICATION

This PROFESSIONAL SERVICES AGREEMENT ("Agreement") is entered into by and between the City of South Pasadena, a California municipal corporation ("City"), and KOA Corporation ("Consultant").

2. RECITALS

2.1. City has determined that it requires the following professional services from a consultant: engineering design services for the North-South Corridor Intelligent Transportation System (ITS) Deployment Project, Project No. 2020-02, Federal Project No. RABA01-5071(024) (the project).

2.2. Consultant represents that it is fully qualified to perform such professional services by virtue of its experience and the training, education and expertise of its principals and employees. Consultant further represents that it is willing to accept responsibility for performing such services in accordance with the terms and conditions set forth in this Agreement.

2.3. Consultant represents that it has no known relationships with third parties, City Council members, or employees of City which would (1) present a conflict of interest with the rendering of services under this Agreement under Government Code Section 1090, the Political Reform Act (Government Code Section 81000 *et seq.*), or other applicable law, (2) prevent Consultant from performing the terms of this Agreement, or (3) present a significant opportunity for the disclosure of confidential information.

NOW, THEREFORE, for and in consideration of the mutual covenants and conditions herein contained, City and Consultant agree as follows:

3. DEFINITIONS

3.1. "Design Professional": A Design Professional is any individual satisfying one or more of the following: (1) licensed as an architect pursuant to Business and Professions Code 5500 et seq., (2) licensed as a landscape architect pursuant to Business and Professions Code 5615 et seq., (3) licensed as a professional land surveyor pursuant to Business and Professions Code 8700 et seq., or (4) registered as a professional engineer pursuant to Business and Professions Code 6700 et seq.

3.2. "Scope of Services": Such professional services as are set forth in the Scope of Services attached hereto as Exhibit A and incorporated herein by this reference.

DocuSign Envelope ID: C5BA92C6-E12F-4B61-8A71-5D7114C08DA5

3.3. "Agreement Administrator": The Agreement Administrator for this project is Ghassan Shelleh, Deputy Director of Public Works. The Agreement Administrator shall be the principal point of contact at the City for this project. All services under this Agreement shall be performed at the request of the Agreement Administrator. The Agreement Administrator will establish the timetable for completion of services and any interim milestones. City reserves the right to change this designation upon written notice to Consultant

3.4. "Approved Fee Schedule": Consultant's compensation rates are set forth in the fee schedule attached hereto as Exhibit B and incorporated herein by this reference. This fee schedule shall remain in effect for the duration of this Agreement unless modified in writing by mutual agreement of the parties. Compensation as a Maximum Amount contract is based on total contract cost for tasks contracted for.

3.5. "Maximum Amount": The highest total compensation and costs payable to Consultant by City under this Agreement. The Maximum Amount under this Agreement is Seven Hundred Eighty-Eight Thousand Four Hundred Eighty-Three Dollars ($788,483).

3.6. "Commencement Date": August 18, 2021.

3.7. "Termination Date": Upon completion of the Scope of Services.

4. TERM

The term of this Agreement shall commence at 12:00 a.m. on the Commencement Date and shall expire when Consultant has adequately completed their Scope of Services unless extended by written agreement of the parties or terminated earlier under Section 16 ("Termination") below. Consultant may request extensions of time to perform the services required hereunder. Such extensions shall be effective if authorized in advance by City in writing and incorporated in written amendments to this Agreement.

DocuSign Envelope ID: C5BA92C6-E12F-4B61-8A71-5D7114C08DA5

5. CONSULTANT'S DUTIES

5.1. **Services**. Consultant shall perform the services identified in the Scope of Services. City shall have the right to request, in writing, changes in the Scope of Services. Any such changes mutually agreed upon by the parties, and any corresponding increase or decrease in compensation, shall be incorporated by written amendment to this Agreement.

5.2. **Coordination with City**. In performing services under this Agreement, Consultant shall coordinate all contact with City through its Agreement Administrator.

5.3. **Budgetary Notification**. Consultant shall notify the Agreement Administrator, in writing, when fees and expenses incurred under this Agreement have reached eighty percent (80%) of the Maximum Amount. Consultant shall concurrently inform the Agreement Administrator, in writing, of Consultant's estimate of total expenditures required to complete its current assignments before proceeding, when the remaining work on such assignments would exceed the Maximum Amount.

5.4. **Business License.** Consultant shall obtain and maintain in force a City business license for the duration of this Agreement.

5.5. **Professional Standards.** Consultant shall perform all work to the highest standards of Consultant's profession and in a manner reasonably satisfactory to City. Consultant shall keep itself fully informed of and in compliance with all local, state, and federal laws, rules, and regulations in any manner affecting the performance of this Agreement, including all Cal/OSHA requirements, the conflict of interest provisions of Government Code § 1090 and the Political Reform Act (Government Code § 81000 et seq.).

5.6. **Avoid Conflicts.** During the term of this Agreement, Consultant shall not perform any work for another person or entity for whom Consultant was not working at the Commencement Date if such work would present a conflict interfering with performance under this Agreement. However, City may consent in writing to Consultant's performance of such work.

5.7. **Appropriate Personnel.** Consultant has, or will secure at its own expense, all personnel required to perform the services identified in the Scope of Services. All such services shall be performed by Consultant or under its supervision, and all personnel engaged in the work shall be qualified to perform such services. Min Zhou, President/CEO, shall be Consultant's project administrator and shall have direct responsibility for management of Consultant's performance under this Agreement. No change shall be made in Consultant's project administrator without City's prior written consent.

DocuSign Envelope ID: C5BA92C6-E12F-4B61-8A71-5D7114C08DA5

5.8. **Substitution of Personnel.** Any persons named in the proposal or Scope of Services constitutes a promise to the City that those persons will perform and coordinate their respective services under this Agreement. Should one or more of such personnel become unavailable, Consultant may substitute other personnel of at least equal competence upon written approval of City. If City and Consultant cannot agree as to the substitution of key personnel, City may terminate this Agreement for cause.

5.9. **Permits and Approvals.** Consultant shall obtain, at its sole cost and expense, all permits and regulatory approvals necessary for Consultant's performance of this Agreement. This includes, but shall not be limited to, professional licenses, encroachment permits and building and safety permits and inspections.

5.10. **Notification of Organizational Changes.** Consultant shall notify the Agreement Administrator, in writing, of any change in name, ownership or control of Consultant's firm or of any subcontractor. Change of ownership or control of Consultant's firm may require an amendment to this Agreement.

5.11. **Records.** Consultant shall maintain any and all ledgers, books of account, invoices, vouchers, canceled checks, and other records or documents evidencing or relating to charges for services or expenditures and disbursements charged to City under this Agreement for a minimum of three (3) years, or for any longer period required by law, from the date of final payment to Consultant under this Agreement. All such documents shall be made available for inspection, audit, and/or copying at any time during regular business hours, upon oral or written request of City. In addition, pursuant to Government Code Section 8546.7, if the amount of public funds expended under this Agreement exceeds ten thousand dollars, all such documents and this Agreement shall be subject to the examination and audit of the State Auditor, at the request of City or as part of any audit of City, for a period of three (3) years after final payment under this Agreement.

6. SUBCONTRACTING

6.1. **General Prohibition.** This Agreement covers professional services of a specific and unique nature. Except as otherwise provided herein, Consultant shall not assign or transfer its interest in this Agreement or subcontract any services to be performed without amending this Agreement.

6.2. **Consultant Responsible.** Consultant shall be responsible to City for all services to be performed under this Agreement.

6.3. **Identification in Fee Schedule.** All subcontractors shall be specifically listed and their billing rates identified in the Approved Fee Schedule, Exhibit B. Any changes must be approved by the Agreement Administrator in writing as an amendment to this Agreement.

DocuSign Envelope ID: C5BA92C6-E12F-4B61-8A71-5D7114C08DA5

7. COMPENSATION

7.1. **General.** City agrees to compensate Consultant for the services provided under this Agreement, and Consultant agrees to accept payment in accordance with the Fee Schedule in full satisfaction for such services. Compensation shall not exceed the Maximum Amount. Consultant shall not be reimbursed for any expenses unless provided for in this Agreement or authorized in writing by City in advance.

7.2. **Invoices.** Consultant shall submit to City an invoice, on a monthly basis or as otherwise agreed to by the Agreement Administrator, for services performed pursuant to this Agreement. Each invoice shall identify the Maximum Amount, the services rendered (tasks performed) during the billing period, the amount due for the invoice, and the total amount previously invoiced. All labor charges shall be itemized by employee name and classification or position with the firm, the corresponding hourly rate, the hours worked, a description of each labor charge, and the total amount due for labor charges.

7.3. **Taxes.** City shall not withhold applicable taxes or other payroll deductions from payments made to Consultant except as otherwise required by law. Consultant shall be solely responsible for calculating, withholding, and paying all taxes.

7.4. **Disputes.** The parties agree to meet and confer at mutually agreeable times to resolve any disputed amounts contained in an invoice submitted by Consultant.

7.5. **Additional Work.** Consultant shall not be reimbursed for any expenses incurred for work performed outside the Scope of Services unless prior written approval is given by the City through a fully executed written amendment. Consultant shall not undertake any such work without prior written approval of the City.

7.6. **City Satisfaction as Precondition to Payment.** Notwithstanding any other terms of this Agreement, no payments shall be made to Consultant until City is satisfied that the services are satisfactory.

7.7. **Right to Withhold Payments.** If Consultant fails to provide a deposit or promptly satisfy an indemnity obligation described in Section 11, City shall have the right to withhold payments under this Agreement to offset that amount.

8. PREVAILING WAGES

Consultant is aware of the requirements of California Labor Code Section 1720, et seq., and 1770, et seq., as well as California Code of Regulations, Title 8, Section 16000, et seq., ("Prevailing Wage Laws"), which require the payment of prevailing wage rates and the performance of other requirements on certain "public works" and "maintenance" projects including the design and preconstruction phases of a covered public works project. Consultant shall defend, indemnify, and hold the City, its elected

DocuSign Envelope ID: C5BA92C6-E12F-4B61-8A71-5D7114C08DA5

officials, officers, employees, and agents free and harmless form any claim or liability arising out of any failure or alleged failure of Consultant to comply with the Prevailing Wage Laws.

9. OWNERSHIP OF WRITTEN PRODUCTS

All reports, documents or other written material, and all electronic files, including computer-aided design files, developed by Consultant in the performance of this Agreement (such written material and electronic files are collectively known as "written products") shall be and remain the property of City without restriction or limitation upon its use or dissemination by City except as provided by law. Consultant may take and retain copies of such written products as desired, but no such written products shall be the subject of a copyright application by Consultant.

10. RELATIONSHIP OF PARTIES

10.1. **General.** Consultant is, and shall at all times remain as to City, a wholly independent contractor.

10.2. **No Agent Authority.** Consultant shall have no power to incur any debt, obligation, or liability on behalf of City or otherwise to act on behalf of City as an agent. Neither City nor any of its agents shall have control over the conduct of Consultant or any of Consultant's employees, except as set forth in this Agreement. Consultant shall not represent that it is, or that any of its agents or employees are, in any manner employees of City.

10.3. **Independent Contractor Status.** Under no circumstances shall Consultant or its employees look to the City as an employer. Consultant shall not be entitled to any benefits. City makes no representation as to the effect of this independent contractor relationship on Consultant's previously earned California Public Employees Retirement System ("CalPERS") retirement benefits, if any, and Consultant specifically assumes the responsibility for making such a determination. Consultant shall be responsible for all reports and obligations including, but not limited to: social security taxes, income tax withholding, unemployment insurance, disability insurance, and workers' compensation, and other applicable federal and state taxes.

10.4. **Indemnification of CalPERS Determination.** In the event that Consultant or any employee, agent, or subcontractor of Consultant providing services under this Agreement claims or is determined by a court of competent jurisdiction or CalPERS to be eligible for enrollment in CalPERS as an employee of the City, Consultant shall indemnify, defend, and hold harmless City for the payment of any employee and/or employer contributions for CalPERS benefits on behalf of Consultant or its employees, agents, or subcontractors, as well as for the payment of any penalties and interest on such contributions, which would otherwise be the responsibility of City.

DocuSign Envelope ID: C5BA92C6-E12F-4B61-8A71-5D7114C08DA5

11. INDEMNIFICATION

11.1 **Definitions.** For purposes of this Section 11, "Consultant" shall include Consultant, its officers, employees, servants, agents, or subcontractors, or anyone directly or indirectly employed by either Consultant or its subcontractors, in the performance of this Agreement. "City" shall include City, its officials, officers, agents, employees and volunteers.

11.2 **Consultant to Indemnify City.** Where the services to be provided by Consultant under this Agreement are design professional services, as that term is defined under Civil Code Section 2782.8, Consultant agrees to indemnify, defend and hold harmless, the City, its officers, officials, employees and volunteers from any and all claims, demands, costs or liability that actually or allegedly arise out of, or pertain to, or relate to the negligence, recklessness or willful misconduct of Consultant and its agents in the performance of services under this contract, but this indemnity does not apply to liability for damages for bodily injury, property damage or other loss, arising from the sole negligence, active negligence or willful misconduct by the City, its officers, official employees, and volunteers. If it is finally adjudicated that liability is caused by the comparative active negligence or willful misconduct of the City, then Consultant's indemnification and defense obligations shall be reduced in proportion to the established comparative liability of the City and shall not exceed the Consultant's proportionate percentage of fault.

As respects all acts or omissions which do not arise directly out of the performance of design professional services, including but not limited to those acts or omissions normally covered by general and automobile liability insurance, and to the full extent permitted by law, Consultant agrees to indemnity, defend and hold harmless the City, its officers, officials, agents, employees, and volunteers from and against any claims, demands, losses, liability of any kind or nature (including liability for claims, suits, actions, arbitration proceedings, administrative proceedings, regulatory proceedings, losses, expenses or costs of any kind, whether actual, alleged or threatened, including attorney's fees and costs, court costs, interest, defense costs, and expert witness fees) where the same arise out of, are in connection with, are a consequence of, or are in any way attributable to, in whole or in part, the performance of this Agreement by Consultant or by any individual or entity for which Consultant is legally liable, including but not limited to officers, agents, employees or sub-contractors of Consultant, excepting those which arise out of the active negligence, sole negligence or willful misconduct of the City, its officers, officials, employees and volunteers.

11.3 **Scope of Indemnity.** Personal injury shall include injury or damage due to death or injury to any person, whether physical, emotional, consequential or otherwise, Property damage shall include injury to any personal or real property. Consultant shall not be required to indemnify City for such loss or damage as is caused by the sole active negligence or willful misconduct of the City. If it is finally adjudicated that liability is caused by the comparative negligence or willful misconduct of an indemnified party,

DocuSign Envelope ID: C5BA92C6-E12F-4B61-8A71-5D7114C08DA5

then Consultant's indemnification obligation shall be reduced in proportion to the established comparative liability.

11.4 **Attorneys Fees.** Such costs and expenses shall include reasonable attorneys' fees for counsel of City's choice, expert fees and all other costs and fees of litigation. Consultant shall not be entitled to any refund of attorneys' fees, defense costs or expenses in the event that it is adjudicated to have been non-negligent.

11.5 **Defense Deposit.** The City may request a deposit for defense costs from Consultant with respect to a claim. If the City requests a defense deposit, Consultant shall provide it within 15 days of the request.

11.6 **Waiver of Statutory Immunity.** The obligations of Consultant under this Section 11 are not limited by the provisions of any workers' compensation act or similar act. Consultant expressly waives its statutory immunity under such statutes or laws as to City.

11.7 **Indemnification by Subcontractors.** Consultant agrees to obtain executed indemnity agreements with provisions identical to those set forth here in this Section 11 from each and every subcontractor or any other person or entity involved in the performance of this Agreement on Consultant's behalf.

11.8 **Insurance Not a Substitute.** City does not waive any indemnity rights by accepting any insurance policy or certificate required pursuant to this Agreement. Consultant's indemnification obligations apply regardless of whether or not any insurance policies are determined to be applicable to the claim, demand, damage, liability, loss, cost or expense.

11.9 **Civil Code.** The parties are aware of the provisions of Civil Code 2782.8 relating to the indemnification and the duty and the cost to defend a public agency by a Design Professional and agree that this Section 11 complies therewith.

12. INSURANCE

12.1. **Insurance Required.** Consultant shall maintain insurance as described in this section and shall require all of its subcontractors, consultants, and other agents to do the same. Approval of the insurance by the City shall not relieve or decrease any liability of Consultant Any requirement for insurance to be maintained after completion of the work shall survive this Agreement.

12.2. **Documentation of Insurance.** City will not execute this agreement until it has received a complete set of all required documentation of insurance coverage. However, failure to obtain the required documents prior to the work beginning shall not waive the Consultant's obligation to provide them. Consultant shall file with City:

DocuSign Envelope ID: C5BA92C6-E12F-4B61-8A71-5D7114C08DA5

- Certificate of Insurance, indicating companies acceptable to City, with a Best's Rating of no less than A:VII showing. The Certificate of Insurance must include the following reference: Engineering Design Services for the North-South Corridor Intelligent Transportation System (ITS) Deployment Project, Project No. 2020-02, Federal Project No. RABA01-5071(024).
- Documentation of Best's rating acceptable to the City.
- Original endorsements effecting coverage for all policies required by this Agreement.
- Complete, certified copies of all required insurance policies, including endorsements affecting the coverage.

12.3. **Coverage Amounts.** Insurance coverage shall be at least in the following minimum amounts:

• Professional Liability Insurance:	$2,000,000 per occurrence, $4,000,000 aggregate
• General Liability:	
• General Aggregate:	$4,000,000
• Products Comp/Op Aggregate	$4,000,000
• Personal & Advertising Injury	$2,000,000
• Each Occurrence	$2,000,000
• Fire Damage (any one fire)	$ 100,000
• Medical Expense (any 1 person)	$ 10,000
• Workers' Compensation:	
• Workers' Compensation	Statutory Limits
• EL Each Accident	$1,000,000
• EL Disease - Policy Limit	$1,000,000
• EL Disease - Each Employee	$1,000,000
• Automobile Liability	
• Any vehicle, combined single limit	$1,000,000

Any available insurance proceeds broader than or in excess of the specified minimum insurance coverage requirements or limits shall be available to the City as additional insured. Furthermore, the requirements for coverage and limits shall be the greater of (1) the minimum coverage and limits specified in this Agreement, or (2) the broader coverage and maximum limits of coverage of any insurance policy or proceeds available to the named insured

12.4. **General Liability Insurance.** Commercial General Liability Insurance shall be no less broad than ISO form CG 00 01. Coverage must be on a standard Occurrence form. Claims-Made, modified, limited or restricted Occurrence forms are not acceptable.

DocuSign Envelope ID: C5BA92C6-E12F-4B61-8A71-5D7114C08DA5

12.5. **Worker's Compensation Insurance.** Consultant is aware of the provisions of Section 3700 of the Labor Code which requires every employer to carry Workers' Compensation (or to undertake equivalent self-insurance), and Consultant will comply with such provisions before commencing the performance of the work of this Agreement. If such insurance is underwritten by any agency other than the State Compensation Fund, such agency shall be a company authorized to do business in the State of California.

12.6. **Automobile Liability Insurance.** Covered vehicles shall include owned if any, non-owned, and hired automobiles and, trucks.

12.7. Pr**ofessional Liability Insurance or Errors & Omissions Coverage.** The deductible or self-insured retention may not exceed $50,000. If the insurance is on a Claims-Made basis, the retroactive date shall be no later than the commencement of the work. Coverage shall be continued for two years after the completion of the work by one of the following: (1) renewal of the existing policy; (2) an extended reporting period endorsement; or (3) replacement insurance with a retroactive date no later than the commencement of the work under this Agreement.

12.8. **Claims-Made Policies.** If any of the required policies provide coverage on a claims-made basis the Retroactive Date must be shown and must be before the date of the contract or the beginning of contract work. Claims-Made Insurance must be maintained and evidence of insurance must be provided for at least five (5) years after completion of the contract of work. If coverage is canceled or non-renewed, and not replaced with another claims-made policy form with a Retroactive Date prior to the contract effective date, the Consultant must purchase "extended reporting" coverage for a minimum of five (5) years after completion of contract work.

12.9. **Additional Insured Endorsements.** The City, its City Council, Commissions, officers, and employees of South Pasadena must be endorsed as an additional insured for each policy required herein, other than Professional Errors and Omissions, for liability arising out of ongoing and completed operations by or on behalf of the Consultant. Consultant's insurance policies shall be primary as respects any claims related to or as the result of the Consultant's work. Any insurance, pooled coverage or self-insurance maintained by the City, its elected or appointed officials, directors, officers, agents, employees, volunteers, or consultants shall be non-contributory. All endorsements shall be signed by a person authorized by the insurer to bind coverage on its behalf. General liability coverage can be provided using an endorsement to the Consultant's insurance at least as broad as ISO Form CG 20 10 11 85 or both CG 20 10 and CG 20 37.

12.10. **Failure to Maintain Coverage.** In the event any policy is canceled prior to the completion of the project and the Consultant does not furnish a new certificate of

DocuSign Envelope ID: C5BA92C6-E12F-4B61-8A71-5D7114C08DA5

insurance prior to cancellation, City has the right, but not the duty, to obtain the required insurance and deduct the premium(s) from any amounts due the Consultant under this Agreement. Failure of the Consultant to maintain the insurance required by this Agreement, or to comply with any of the requirements of this section, shall constitute a material breach of this Agreement.

12.11. **Notices.** Contractor shall provide immediate written notice if (1) any of the required insurance policies is terminated; (2) the limits of any of the required policies are reduced; (3) or the deductible or self-insured retention is increased. Consultant shall provide no less than 30 days' notice of any cancellation or material change to policies required by this Agreement. Consultant shall provide proof that cancelled or expired policies of insurance have been renewed or replaced with other policies providing at least the same coverage. Such proof will be furnished at least two weeks prior to the expiration of the coverages. The name and address for Additional Insured Endorsements, Certificates of Insurance and Notices of Cancellation is: City of South Pasadena, Attn: Public Works Department, 1414 Mission Street, South Pasadena, CA 91030.

12.12. **Consultant's Insurance Primary.** The insurance provided by Consultant, including all endorsements, shall be primary to any coverage available to City. Any insurance or self-insurance maintained by City and/or its officers, employees, agents or volunteers, shall be in excess of Consultant's insurance and shall not contribute with it.

12.13. **Waiver of Subrogation.** Consultant hereby waives all rights of subrogation against the City. Consultant shall additionally waive such rights either by endorsement to each policy or provide proof of such waiver in the policy itself.

12.14. **Report of Claims to City.** Consultant shall report to the City, in addition to the Consultant's insurer, any and all insurance claims submitted to Consultant's insurer in connection with the services under this Agreement.

12.15. **Premium Payments and Deductibles.** Consultant must disclose all deductibles and self-insured retention amounts to the City. The City may require the Consultant to provide proof of ability to pay losses and related investigations, claim administration, and defense expenses within retention amounts. Ultimately, City must approve all such amounts prior to execution of this Agreement.

City has no obligation to pay any premiums, assessments, or deductibles under any policy required in this Agreement. Consultant shall be responsible for all premiums and deductibles in all of Consultant's insurance policies. The amount of deductibles for insurance coverage required herein are subject to City's approval.

DocuSign Envelope ID: C5BA92C6-E12F-4B61-8A71-5D7114C08DA5

12.16. **Duty to Defend and Indemnify.** Consultant's duties to defend and indemnify City under this Agreement shall not be limited by the foregoing insurance requirements and shall survive the expiration of this Agreement.

13. MUTUAL COOPERATION

13.1. **City Cooperation in Performance.** City shall provide Consultant with all pertinent data, documents and other requested information as is reasonably available for the proper performance of Consultant's services under this Agreement.

13.2. **Consultant Cooperation in Defense of Claims.** If any claim or action is brought against City relating to Consultant's performance in connection with this Agreement, Consultant shall render any reasonable assistance that City may require in the defense of that claim or action.

14. NOTICES

Any notices, bills, invoices, or reports required by this Agreement shall be deemed received on: (i) the day of delivery if delivered by hand, facsimile or overnight courier service during Consultant's and City's regular business hours; or (ii) on the third business day following deposit in the United States mail if delivered by mail, postage prepaid, to the addresses listed below (or to such other addresses as the parties may, from time to time, designate in writing).

If to City

Ghassan Shelleh
City of South Pasadena
Public Works Department
1414 Mission Street
South Pasadena, CA 91030
Telephone: (626) 403-7240
Facsimile: (626) 403-7241

If to Consultant

Min Zhou
KOA Corporation
1100 Corporate Center Drive, Suite 201
Monterey Park, CA 91754
Telephone: (323) 260-4703

With courtesy copy to:

Teresa L. Highsmith, Esq.
South Pasadena City Attorney
Colantuono, Highsmith & Whatley, PC
790 E. Colorado Blvd.., Ste. 850
Pasadena, CA 91101
Telephone: (213) 542-5700
Facsimile: (213) 542-5710

DocuSign Envelope ID: C5BA92C6-E12F-4B61-8A71-5D7114C08DA5

15. SURVIVING COVENANTS

The parties agree that the covenants contained in paragraph 5.11 (Records), paragraph 10.4 (Indemnification of CalPERS Determination), Section 11 (Indemnity), paragraph 12.8 (Claims-Made Policies), paragraph 13.2 (Consultant Cooperation in Defense of Claims), and paragraph 18.1 (Confidentiality) of this Agreement shall survive the expiration or termination of this Agreement, subject to the provisions and limitations of this Agreement and all otherwise applicable statutes of limitations and repose.

16. TERMINATION

16.1. **City Termination.** City may terminate this Agreement for any reason on five calendar days' written notice to Consultant. Consultant agrees to cease all work under this Agreement on or before the effective date of any notice of termination. All City data, documents, objects, materials or other tangible things shall be returned to City upon the termination or expiration of this Agreement.

16.2. **Consultant Termination.** Consultant may terminate this Agreement for a material breach of this Agreement upon 30 days' notice.

16.3. **Compensation Following Termination.** Upon termination, Consultant shall be paid based on the work satisfactorily performed at the time of termination. In no event shall Consultant be entitled to receive more than the amount that would be paid to Consultant for the full performance of the services required by this Agreement. The City shall have the benefit of such work as may have been completed up to the time of such termination.

16.4. **Remedies.** City retains any and all available legal and equitable remedies for Consultant's breach of this Agreement.

17. INTERPRETATION OF AGREEMENT

17.1. **Governing Law.** This Agreement shall be governed and construed in accordance with the laws of the State of California.

17.2. **Integration of Exhibits.** All documents referenced as exhibits in this Agreement are hereby incorporated into this Agreement. In the event of any material discrepancy between the express provisions of this Agreement and the provisions of any document incorporated herein by reference, the provisions of this Agreement shall prevail. This instrument contains the entire Agreement between City and Consultant with respect to the transactions contemplated herein. No other prior oral or written agreements are binding upon the parties. Amendments hereto or deviations herefrom shall be effective and binding only if made in writing and executed on by City and Consultant.

DocuSign Envelope ID: C5BA92C6-E12F-4B61-8A71-5D7114C08DA5

17.3. **Headings.** The headings and captions appearing at the commencement of the sections hereof, and in any paragraph thereof, are descriptive only and for convenience in reference to this Agreement. Should there be any conflict between such heading, and the section or paragraph thereof at the head of which it appears, the language of the section or paragraph shall control and govern in the construction of this Agreement.

17.4. **Pronouns.** Masculine or feminine pronouns shall be substituted for the neuter form and vice versa, and the plural shall be substituted for the singular form and vice versa, in any place or places herein in which the context requires such substitution(s).

17.5. **Severability.** If any term or provision of this Agreement or the application thereof to any person or circumstance shall, to any extent, be invalid or unenforceable, then such term or provision shall be amended to, and solely to the extent necessary to, cure such invalidity or unenforceability, and shall be enforceable in its amended form. In such event, the remainder of this Agreement, or the application of such term or provision to persons or circumstances other than those as to which it is held invalid or unenforceable, shall not be affected, and each term and provision of this Agreement shall be valid and be enforced to the fullest extent permitted by law.

17.6. **No Presumption Against Drafter.** Each party had an opportunity to consult with an attorney in reviewing and drafting this agreement. Any uncertainty or ambiguity shall not be construed for or against any party based on attribution of drafting to any party.

18. GENERAL PROVISIONS

18.1. **Confidentiality.** All data, documents, discussion, or other information developed or received by Consultant for performance of this Agreement are deemed confidential and Consultant shall not disclose it without prior written consent by City. City shall grant such consent if disclosure is legally required. All City data shall be returned to City upon the termination or expiration of this Agreement.

18.2. **Conflicts of Interest.** Consultant maintains and warrants that it has not employed nor retained any company or person, other than a bona fide employee working solely for Consultant, to solicit or secure this Agreement. Further, Consultant warrants that it has not paid nor has it agreed to pay any company or person, other than a bona fide employee working solely for Consultant, any fee, commission, percentage, brokerage fee, gift or other consideration contingent upon or resulting from the award or making of this Agreement. Consultant further agrees to file, or shall cause its employees or subcontractor to file, a Statement of Economic Interest with the City's Filing Officer if required under state law in the performance of the services. For breach or violation of this warranty, City shall have the right to rescind this Agreement without liability. For the term of this Agreement, no member, officer, or employee of City, during the term of his or her service with City, shall have any direct interest in this Agreement, or obtain any present or anticipated material benefit arising therefrom.

DocuSign Envelope ID: C5BA92C6-E12F-4B61-8A71-5D7114C08DA5

18.3. **Non-assignment.** Consultant shall not delegate, transfer, subcontract or assign its duties or rights hereunder, either in whole or in part, without City's prior written consent, and any attempt to do so shall be void and of no effect. City shall not be obligated or liable under this Agreement to any party other than Consultant.

18.4. **Binding on Successors.** This Agreement shall be binding on the successors and assigns of the parties.

18.5. **No Third-Party Beneficiaries.** Except as expressly stated herein, there is no intended third-party beneficiary of any right or obligation assumed by the parties.

18.6. **Time of the Essence.** Time is of the essence for each and every provision of this Agreement.

18.7. **Non-Discrimination.** Consultant shall not discriminate against any employee or applicant for employment because of race, sex (including pregnancy, childbirth, or related medical condition), creed, national origin, color, disability as defined by law, disabled veteran status, Vietnam veteran status, religion, age (40 and above), medical condition (cancer-related), marital status, ancestry, or sexual orientation. Employment actions to which this provision applies shall include, but not be limited to, the following: employment, upgrading, demotion, or transfer; recruitment or recruitment advertising; layoff or termination; rates of pay or other forms of compensation; or in terms, conditions or privileges of employment, and selection for training. Consultant agrees to post in conspicuous places, available to employees and applicants for employment, the provisions of this nondiscrimination clause.

18.8. **Waiver.** No provision, covenant, or condition of this Agreement shall be deemed to have been waived by City or Consultant unless in writing signed by one authorized to bind the party asserted to have consented to the waiver. The waiver by City or Consultant of any breach of any provision, covenant, or condition of this Agreement shall not be deemed to be a waiver of any subsequent breach of the same or any other provision, covenant, or condition.

18.9. **Excused Failure to Perform.** Consultant shall not be liable for any failure to perform if Consultant presents acceptable evidence, in City's sole judgment, that such failure was due to causes beyond the control and without the fault or negligence of Consultant.

18.10. **Remedies Non-Exclusive.** Each right, power and remedy provided for herein or now or hereafter existing at law, in equity, by statute, or otherwise shall be cumulative and shall be in addition to every other right, power, or remedy provided for herein or now or hereafter existing at law, in equity, by statute, or otherwise. The exercise, the commencement of the exercise, or the forbearance from the exercise by any party of any one or more of such rights, powers or remedies shall not preclude the simultaneous or later exercise by such party of any or all of such other rights, powers or remedies.

DocuSign Envelope ID: C5BA92C6-E12F-4B61-8A71-5D7114C08DA5

18.11. **Attorneys' Fees.** If legal action shall be necessary to enforce any term, covenant or condition contained in this Agreement, the prevailing party shall be entitled to an award of reasonable attorneys' fees and costs expended in the action.

18.12. **Venue.** The venue for any litigation shall be Los Angeles County, California and Consultant hereby consents to jurisdiction in Los Angeles County for purposes of resolving any dispute or enforcing any obligation arising under this Agreement.

DocuSign Envelope ID: C5BA92C6-E12F-4B61-8A71-5D7114C08DA5

TO EFFECTUATE THIS AGREEMENT, the parties have caused their duly authorized representatives to execute this Agreement on the dates set forth below.

"City"
City of South Pasadena

By: DocuSigned by: Armine Chaparyan B6E60358A0E24D7...
Signature

Printed: Armine Chaparyan

Title: City Manager

Date: 9/16/2021

"Consultant"
KOA Corporation

By: Min Zhou
Signature

Printed: Min Zhou

Title: CEO/President

Date: 9/15/2021

Attest:

By: DocuSigned by: Christina Muñoz BDCE537AC2E8433...
Lucie Colombo, CMC, CPMC
City Clerk

Date: 9/27/2021

"Consultant"
KOA Corporation

By: Walter Okitsu
Walter Okitsu
Vice President

Date: Sept 15, 2021

Approved as to form:

By: DocuSigned by: Andrew Sarad 0E98AF29902B451...
Teresa L. Highsmith, City Attorney

Date: 9/27/2021

DocuSign Envelope ID: C5BA92C6-E12F-4B61-8A71-5D7114C08DA5

Exhibit A

Scope of Services

TASK 1: BACKGROUND RESEARCH/FIELDREVIEW/DATA COLLECTION

The consultant shall lead a data collection effort to gather readily available information that will be required to successfully complete the project tasks for the project. After the project kick-off, the consultant shall conduct a full-fledged field review of all the signalized intersections within the project limits. The consultant will gather the sufficient information sufficient to perform the Scope of Services, including but not limited to the following information:

- Existing timing sheets, including coordination plans
- As-built drawings (existing conditions)
- Aerial photos and maps
- All planned or programmed roadway improvements
- Intersection and roadway geometrics (e.g., number and width of thru and turn lanes, length of turn lanes, curb return radii, access ramps, medians, sidewalks, etc.)
- Signal timing and priority parameters including pedestrian and bicycle timing, leading and lagging left-turn phasing, conditional servicing as well as the timing optimization
- Identification of critical intersections with known heavy pedestrian and/or bicycle traffic
- AM/MD/PM and Weekend daily and turning movement count data
- Speed Limits
- Major source/sink points along the corridor for volume balancing and model calibration
- General signal system – Signal cabinet, conduits, controller/program software, time source units, EVP, BBS/UPS, load flashers, etc.
- Vehicle Detection - Detector racks, terminal blocks, conditions of loops, detector cards. Single/ multi camera video detection and applicable communication modules
- ITS System - CCTV's, video encoders/decoders, Bluetooth performance modules, TPMS etc.
- Communication - SIC Type, routers, switches, fiber patch panels/fiber distribution units, jumper cables, etc.
- Signal poles, mast arms, luminaires - Review for viable mounting of proposed system item
- Potential pothole locations for all the new decorative and other poles required for the project

Historic traffic counts shall be collected from past studies, including those conducted by the consultant.Where no historic data is available, new counts shall be conducted. All counts shall be adjusted to reflect the expected post-pandemic conditions. Traffic counts shall be used for establishing intersection phase splits and governing cycle lengths needed at project locations to be used for the coordinated time of day (TOD) plans. Additionally, they shall also provide information for peak period travel patterns, peak hour factors, directional flow, bike and pedestrian demands, and determination of start/stop times of each coordinated TOD plans.

For each intersection, the consultant shall provide detailed signal system conditions with photos and field inventory formas shown below. The inventory sheets will be reviewed with City staff in advance of any field work being performed to ensure a mutual agreement/concurrence of the data that will be collected. This approach will help reduce the need to return to the field to

DocuSign Envelope ID: C5BA92C6-E12F-4B61-8A71-5D7114C08DA5

collect additional data. The gathered data for the existing signal system review shall be summarized within a correspondingtechnical memorandum.

Task 1 Deliverables

- Detailed field reconnaissance exhibits
- Existing traffic signal inventory (roadway/intersections)
- Timing audit and calculations

The consultant shall also perform the timing audit. The goal of the timing audit is to ensure that the timing used at these intersections are up to the latest standards per the California Manual on Uniform Traffic Control devices (CA MUTCD). “Phase” timing conformance with CA MUTCD for pedestrian clearance (Walk + Flash Don’t Walk), Yellow time, Red time, and bike minimum green for each intersection are based equations with the primary controlling criteria of distance and speed. The distance used for each assessment will be the crossing/clearance measurements for vehicles, bicycles, and pedestrians obtained from the Filed Review’s and As- Built Plan preparation. The critical controlling element for this audit will be the determination of design vehiclespeed and other factors utilized in the “phase” timings calculations. Once the determination of the appropriatevehicle approach speed has been identified, the consultant will provide calculations for each intersection’s “Phase” timings per the CA MUTCD guidelines and standards for use in the project.

These calculations shall be provided by consultant in an excel spread sheet along with determination findings summarized in a brief technical memo with appendices data signed and stamped by a licensed California Traffic Engineer. Once approved by the City, these phase timings shall be implemented in the revised controller timing sheets foreach project intersection.

TASK 2: PROJECT MANAGEMENT SERVICES

The consultant shall recognize the importance of providing a structuredand reliable project management approach that is intuitive, easy to understand, and embraced by the City and partner agencies. The consultant shall understand that consistency of project workflow is important to City staff and the key to implementing this program successfully.

The consultant shall serve as the primary contact for the City and other stakeholders, ensuring the appropriate resources and tools are available to successfully deliver the project to the City and stakeholders. The consultant shall serve as the quality control manager and shall be responsible for conducting an independent review of all deliverables and design plans presented to the City and partner agencies. The consultant shall establish a methodology which will be used to deliver the project on-budget, on-time, high-quality product to the City.

The consultant shall prepare and maintain a project schedule in MS Project, noting timelines for task completion, dates for milestones and/or deliverables, and task dependencies. A draft schedule shall be prepared for review during the kick-off meeting. Following concurrence on the schedule,a finalized baseline schedule should be provided to the City.

The consultant shall schedule and conduct a project kick-off meetingwithin two weeks of the NTP to discuss project details (review conceptual layouts for design and key issues mentioned herein), establish goals, review the project schedule, and coordinate efforts. A meeting notice, agenda, and meeting minutes noting action items shall be prepared for the kick-off meeting.

DocuSign Envelope ID: C5BA92C6-E12F-4B61-8A71-5D7114C08DA5

TASK 2.1: MEETINGS/OUTREACH

The consultant shall provision for up to twenty-six meetings which would cover public outreach, presentation to the City Council and Mobility and Transportation Infrastructure Committee, Project scoping, design alternatives, design progress status, and pre-bid. The consultant shall save one public meeting in which the awarded contractor will be invitedand answer any questions and concerns the communitymight have.

The consultant shall prepare all necessary materials for the meetings including but not limited to Agenda, Handouts, Exhibit boards, Electronic presentation, comment cards, and Minutes. The consultant shall also arrange for light refreshments as requested. The consultant shall submit to the City in writing responseto all the concerns as a result of the meetings.

The consultant shall visit the Farmer's Market displaying project information on boards for the public and answer any questions public may have for the project. The consultant shall coordinate with the South Pasadena Unified School District to provide a display or presentation at an event on one of their campuses.

TASK 2.2: SCHEDULE

The consultant shall use MS Project to prepare and provide schedule of the scope of work in Gantt chart format for City's review. The schedule shall include all the scope items by tasks furtherdivided into subtasks, timeframe and dependability of each task in relation to other tasks. Any critical path shall also be highlighted and strictly monitored. The consultant shall provide a detail implementation of each item with key project milestones, meetings, and timelines for the deliverables. The consultant shall constantly review the schedule with City staff and understand that if there are any constraintsor milestones that the City needs to meet ahead of time reasonably, the consultant shall revise and refine the scheduleaccordingly. The consultant shall have the capability and capacity to accelerate the schedule as needed. The consultant shall understand that the project schedule is never a static document and must be adjusted along the way. The consultant shall submit monthly schedule updates to the City to highlight any adjustmentswhich were forced due to any unavoidable circumstances.

The consultant's focus shall be to ensure that the project resourcesare available when needed to meet the scheduled commitment.

Task 2 Deliverables

- Lead meetings
- Dynamic project schedule

TASK 3: DESIGN DEVELOPMENT (PS&E)

Using information gathered from the base plans (if available), field reviews, and available utility records, the consultant shall update and rectify discrepancies from the City's base plans. The updated base plans shall be used in preparing the neededconstruction plans for the project.

- The consultant shall use information from the provided As- Built plans as well as the field reconnaissance and information gathered in Task 1 to identify potential design issues and feasibility of construction

DocuSign Envelope ID: C5BA92C6-E12F-4B61-8A71-5D7114C08DA5

- The consultant shall suggest improvements to the signal plans
- The consultant shall suggest optimum methodology to install new poles while keeping the operations running. Consultant shall specify locations of locations of all poles, including temporary pole locations.
- The consultant shall prepare ITS design plans along project corridors (Phase I) and present traffic assessment concepts for Agency's review
- The consultant shall use the collected survey data to identify all physical roadway entities.

The consultant shall also discuss ADA ramp upgrades (as applicable),location of power sources, GPS based Emergency vehiclepre-emption, advanced dilemma zone detection, bicycle detection at the limit line and minor civil improvements as necessary. The plans shall also show installation of proposed conduits, cables (such as for a video detection system, emergency preemption, power), power surge protection, and grounding provisions.

TASK 3.1: PRELIMINARY DESIGN – 30%SUBMITTAL
The consultant shall review City's General Plan's Goals as far as traffic circulation system and compare with suggested improvement plans to the traffic signals. The consultant shall provide conceptual plan layouts for Agency's review to avoid unnecessary plan changes at later stages. The consultant shall use their survey data to identify all physical roadway entities. This is considered very critical due to the installation of new and temporary poles, as the consultant will need to establish horizontal and vertical control for the project. The consultant shall foresee the minimum need for temporary construction easement for the project.

The 30% submittal is basically a Preliminary Design Report (PDR) which will clearly explain the analysis, concept of operations, and rationale for the recommendations. The consultant's findings, work assignments, analysis procedures, and recommendations will be provided as part of the PDR. The consultant shall submit the PDR for the City's review and comments. This report will become the basis of design for implementation with recommendations for changes to traffic operations andpreliminary design details.

Signal plans shall be prepared at a scale of 1"=20' for theproposed intersection improvements. The base plan shall show centerlines, right-of-way lines, relevant utilities of record, and existing traffic controls. Existing traffic signal poles, equipment, notes, and schedules shall be inventoried in the field and shown on each base plan. Proposed new or modified facilities shall be designed and shown on the drawing to create a complete traffic signalplan. The consultant shall anticipate that the City may opt for IP based protocol for transmission of data back to the TMC. The ongoing Fair Oaks Avenue Signal Project shall upgrade the City's data-carrying infrastructure. The video/radar detection system, together with future installation of CCTVs, shall enable the City to remotely observe problem intersections from the City's TMC, studytheir significance and develop solutions to mitigate the difficulties. The project will give the City a reliable set of tools for better monitoring and managing traffic within the project area.

The consultant shall present the report to the City staff, discuss the results of the preliminary design report and obtain approval to proceed to the next design stage from the City. This project should comply with the intent of the City's ITS plan to upgrade the infrastructure to meet the latest requirements of ITS standards and to use ITStechnologies to mitigate expected increases in traffic demand on the City's roadway system.

DocuSign Envelope ID: C5BA92C6-E12F-4B61-8A71-5D7114C08DA5

TASK 3.2: PRELIMINARY DESIGN – 50%SUBMITTAL
Upon receiving comments on the 30% engineering design, the consultant shall further develop the design plans and cost estimate. The consultant shall coordinate a design review meeting with City staff to discuss the review comments.A comments response matrix shall be developed and submitted to the City. Any outstanding issues for the 50% design phase shall be resolved. Project contracting requirements, general conditions, special provisions, and technical specifications shall be included as well.

TASK 3.3: PRELIMINARY DESIGN – 90%SUBMITTAL
Upon receiving comments on the 50% engineeringdesign, the consultant shall further develop the PS&E. The consultant shall coordinate a design review meeting with City staff to discuss the review comments. A comments response matrix shall be developed accordingly and submitted to the City. Any outstanding issues at this design phase shall be resolved.

TASK 3.4: PRELIMINARY DESIGN – 100%SUBMITTAL
This task shall include the preparation of the 100% bid- ready design plans, specifications, and estimates (Final PS&E). The Final PS&E shall be developed based on comments received on the 90% PS&E package. As always,the consultant shall coordinate a design review meeting with City staff to discuss the review comments. A comments response matrix shall be developed and submitted to the City. Any outstanding issues for the final design phase shall be resolved before the submittal of the final package.

The design plans shall be in conformance with the current California Manual of Uniform Traffic Control Devices (CA MUTCD), Caltrans design standards, the City's Policies andProcedures and Standard Drawings. All work shall conform to the Americans with Disabilities Act (ADA) requirements.Final plans shall be signed and stamped by a California licensed Civil Engineer.

Upon the City's final approval, the consultant shall submit one (1) set of Mylar for the proposed work along with electronic versions of the specifications, estimates, and the wet signed/sealed bid specification sheet to the City for bidding purposes. The plans shall be drawn under City's border sheets and title block. The consultant shall provide both AutoCAD and PDF files for all plan sheets. The consultant shall providespecifications in Microsoft Word formatted file and cost estimates in Microsoft Excel formatted file. The consultant shall follow Caltrans Specifications where applicable, and the City Policies and standards for the preparation of construction specifications.

TASK 3.5: BIDDING SUPPORT
The consultant shall be available to assist the City with Requests for Information (RFI) support throughout the bidding,and construction processes. The consultant shall attend the Pre-Bid Conference and answer technical questions from prospective bidders. The consultant shall provide interpretation and/ or clarification of the approved construction documents during the bidding process as they specifically relate to the design, design intent and execution of the project. The consultant shall assist with bid tabulation/evaluation and providing a recommendation as to the award of the contract. The consultant shall also make any changes to the PS&E package in a timely manner shouldany changes be required during the bidding process.

After the pre-bid conference, RFI requests by the Contractor or City Staff on the design sheets and special provisions shall be responded to through City staff via phone or email. After the bid

DocuSign Envelope ID: C5BA92C6-E12F-4B61-8A71-5D7114C08DA5

is awarded, the consultant shall continueto support the City regarding answering technical questions by the selected contractor.

The consultant shall also help the City creating a project-specific web page on the city's website. The web page shall be active throughout the duration of the project. It shall not only include Bidding information, but also include Project maps, progress photos, and any traffic impacts and trafficalerts due to construction.

Final construction cost estimates shall be provided in the form of a bid schedule. A detailed breakdown by project tasks, materials, components, etc., shall be included in thebid package. The bid package shall include detailed bid item descriptions for each bid listed in the bid schedule and prepared for the purpose of soliciting construction bids.

The consultant shall prepare a printable version of the bid documents including front-end documents providedby the City. This task shall also include meetings and responses to subsequent bidder questions and addenda(if needed).

The consultant shall provide design support during the construction for the ongoing Fair Oak Traffic Signal Improvement Project. The consultant shall review inquiries, submittals, and contractor's change orders during construction and prepare design changes for conditions unforeseen. Consultant shall provide response to submittals, RFI, change order requests, and inquiries by project contractor within two business days.

Task 3 Deliverables

- Approved and bid-ready PS&E (Hard/soft copies)
- Signal timing plans
- Utility outreach documentation
- DBE documentation
- SWPP/BMP
- Revised RFA (Con)
- Approved permits (as needed)
- Prompt response to bidder's RFls, RFCOs, submittals and inquiries
- Addenda to project plans as necessary

TASK 4: QUALITY ASSURANCE/QUALITYCONTROL

The consultant shall be focused on continuous improvement. Consequently, the consultant shall have in place a formal quality assurance program. Formal quality controlchecklists shall be employed and shall be provided to the City for each project deliverable. The consultant shall be designated as the quality control manager for this project.

The consultant shall be responsible for proactively planning and directing the work processes and deliverables under this contract. The consultant shall review and certify all deliverables to make sure their work products meet the City's expectations. The consultant shall build QC into the project schedule and task to ensure products are reviewed for conformance to City standards. The consultant shall also conduct constructability review to avoid construction change orders.

Task 4 Deliverables

DocuSign Envelope ID: C5BA92C6-E12F-4B61-8A71-5D7114C08DA5

- Statement of Peer-Review

TASK 5: ENVIRONMENTAL

NEPA COMPLIANCE

PROJECT DESCRIPTION AND PRELIMINARYENVIRONMENTAL STUDY (PES) FORM PROJECT DESCRIPTION

The consultant shall prepare a detailed narrative project description, including maps, plans, and other graphics sufficient to fully define the project and its location will be prepared. The project description shall meet the content requirements of the National Environmental Protection Act (NEPA) Guidelines by identifying each of the proposed discretionary approval actions, and the physical characteristics of the project. The project description shall describe all ofthe components of the project, including the plannedconstruction schedule, phasing, and date of the anticipated project buildout. The consultant shall utilize graphics prepared by the Project Engineer as much as possible for consistency purposes. The project descriptionshall be submitted to the City of South Pasadena for review and concurrence.

PRELIMINARY ENVIRONMENTAL STUDY (PES) FORM

Following the approval of the project description, the consultant shall prepare a Preliminary Environmental Study (PES) Form forsubmittal to Caltrans District 7. The consultant shall assume participation in up to two conference calls with the City of South Pasadena and Caltrans District 7. The PES will be finalized before work begins on the other tasks.

SUPPORTING TECHNICAL REPORTS

Preliminary review of the proposed project, the requirements of the PES, and similar project documentsindicate that environmental clearance shall require at least two technical studies , an air quality study (as the proposed project is within a National Ambient Air QualityStandards (NAAQS) non-attainment area and does not qualify for an exemption under 40 CFR 93.126, and cultural resources reviews (as a portion of the proposed project is located within an identified historic district), willbe required. The consultant shall prepare the technical study for airquality. The consultant shall prepare the cultural resources reviews and analysis of effect and impacts.

AIR QUALITY STUDY

CHARACTERIZE EXISTING AIR QUALITY CONDITIONS.

To characterize the existing conditions at the project site, the consultant shall describe air quality conditions withinthe South Coast Air Basin and the project area. The consultant shall also compile and present historical data over the past three years (2018-2020) from the nearest South Coast Air Quality Management District (SCAQMD) monitoring station. The consultant shall discuss the most recent Federal and Stateattainment and nonattainment status designations.

ASSESS CONSTRUCTION AIR QUALITY IMPACT.

The consultant shall estimate short-term local and regional air quality effects associated with construction ofthe proposed project. The SCAQMD California Emissions Estimator Model (CalEEMod) shall be used to estimate gross emissions of criteria pollutants generated by the proposed project. Construction shall be minor but will result in worker trips to the site and may involve off-road construction equipment for signal replacement.

ASSESS OPERATIONAL AIR QUALITY IMPACTS.

The consultant shall calculate the mobile-source emissions from the vehicle miles traveled (VMT) along theproject route during existing and future conditions using EMFAC2017 and

DocuSign Envelope ID: C5BA92C6-E12F-4B61-8A71-5D7114C08DA5

compare the future emissions against existing emissions.

CULTURAL RESOURCES REVIEW AREA OF POTENTIAL EFFECTS MAP
The consultant shall prepare an area of potential effects (APE) map for Caltrans review and signature. In so doing, the consultant shall assume participation in up to two conference calls with the Caltrans District 7 Professionally Qualified Staff (PQS). The APE map shall be finalized beforework begins on the other tasks. The consultant shall assume that the APE shall not exceed a one-parcel buffer surrounding the Project area and only if that buffer area includes a previously identified historic properties; properties not previously identified to be historic properties (NEPA) orhistorical resources (CEQA) in the one-parcel buffer willbe excluded from the APE.

HISTORIC RESOURCES EVALUATION REPORT
The consultant shall prepare a narrative format Historic Resources Evaluation Report (HRER) following Caltrans guidelines,specifically Exhibit 6.5 Historic Resources Evaluation Report Format and Content Guide (April 2020). The purpose of this HRER shall be to identify historic propertieswithin the APE following the Caltrans standard HRER format. The consultants shall request a records search from the South Central Coastal Information Center (SCCIC) and review the City of South Pasadena Historic Resources Survey (June 2017) which provides the findings of a comprehensive historic resources survey of the City. Uponinitial review of the 2017 survey report, the consultant shall understand that there approximately 50 known historic properties within a one parcel buffer along Fair Oaks Avenue between Raymond Hill Road and Huntington Drive, as well as the two proposed locations of the Changeable Message Signs. There are no known historic properties within the one-parcel buffer of the two proposed Trailblazer Assembly Signs on Mission Street. A team of Architectural Historian and Archaeologist shall conduct a pedestrian survey of the APE and document the current conditions of the known resources. The consultant shall assume that the results of the archaeological survey will be negative. The consultant shall then develop the HRER, which shall contain the required sections, including a summary of findings, project description, research and field methods, historical overview, description of cultural resources, resource significance, findings, and conclusions. The consultant shall not conduct new evaluations of any potential historic properties, but shall rely on the recent findings of the comprehensive Citywide survey, as recent reportsdemonstrate acceptance of that methodology by Caltrans District 7 and the California Office of Historic Preservation.

ARCHAEOLOGICAL SURVEY REPORT
The consultant shall prepare an ASR for the proposed Project following Caltrans specifications. Study components shall include a literature review and report preparation. The ASR shall identify all potentially significant and National Register of Historic Places (NRHP)-eligible historic and prehistoric archaeological properties within the APE. TheAPE shall be agreed upon by Caltrans prior to the start of any fieldwork. The SCCIC records search shall be reviewedto identify any previously recorded sites located or previous studies conducted within a one-mile radius of the updated Project area. The consultant shall also request a search of the Sacred Lands File (SLF) by the Native American Heritage Commission (NAHC) to identify any areas of Native American heritage significance located within thestudy area. The consultant shall send up to two information query letters to the tribes recommended by the NAHC and follow up unanswered letters with not more than two phone calls to solicit input. All undeveloped areas of the project shall be intensively examined during archaeologicalpedestrian survey using transects spaced 15 meters apart or less, and all sites encountered shall be mapped and recorded on State DPR forms for submittal and assignment of official trinomials. Given the nature of theproject, it shall anticipated that the survey will be negative and involve completion of the appropriate ASR form summarizing the study location, background, methods, and results.

DocuSign Envelope ID: C5BA92C6-E12F-4B61-8A71-5D7114C08DA5

HISTORIC PROPERTIES SURVEY REPORT
The consultant shall prepare a narrative format Historic Properties Survey Report (HPSR) following Caltrans requirements. The HPSR shall follow Caltrans guidelines, specifically Exhibit 2.6 Historic Property Survey Report Format and Content Guide (April 2020) prepared using the HPSR Narrative Format (February 2020). The purpose of the HPSR shall be to document known historic properties within the APE following the Caltrans standard HPSR format. The consultant's Archaeologist and Architectural Historian shall prepare the HPSR report, which shall contain the required sections, including a summary of findings, project description, consulting parties, summary of identification efforts, and findings. The consultant shall utilize the HRER to inform the HPSR. As part of preparing the form, the consultant shall send letters to solicit input from interested parties, specifically PasadenaHeritage and Historical Society and the Pasadena Historical Society and Museum.

FINDING OF NO ADVERSE EFFECT
After conducting appropriate analysis, consultant shall prepare a Finding of No Adverse Effect (FNAE) document to analyze Project effects on cultural resourceswithin the APE. The FNAE shall follow Caltrans guidelines, specifically Exhibit 2.8 FNAE Format and Content Guide (April 2020). The Project shall include standard conditions and mitigation measures that will eliminate the potential for an adverse effect/impact.

For all tasks, the consultant shall achieve compliance with not more than three iterationsof each report (two drafts, one final) to respond to Caltrans comments. It is assumed that those comments shall be editorial in nature and will not require additional research or site visits. The analysis and reports shall be prepared by the consultant's Archaeologists, Architectural Historians, and Historians who meet the Secretary of the Interior's Professional Qualification Standards.

ASSUMPTIONS
This scope of work shall include the charges for the survey, identification of known historic properties, assessment of effects, and the preparation of the APE, HRER, ASR, HPSR,and FNAE reports. Should Caltrans request an APE larger than that described above, a contract augment shall be required. This scope of work shall be based upon the following assumptions:

- All services shall be provided in compliance with Caltrans, local agency, and NEPA/CEQA requirements;
- Field survey shall not exceed three days;
- The SCCIC records search cost shall not exceed $2,000;
- If the City has a more recent iteration of the historic resources survey than the Administrative Draft from 2017 and DPRS that are available online, the City shall provide the most recent iteration and accompanying DPR forms to ASM;
- Additional archival research shall not be required;
- Deliverables shall be limited to two draft and one final report for each task;
- Reports shall be provided electronically only; and
- If Caltrans or City comments require additional iterations, research, site visits, or meetings/ conference calls, the consultant shall bill the City above the limit of the contract following our standard billing rates, plus applicable mileage.

COMPLETION OF THE FINDING OF NO ADVERSEEFFECT DOCUMENTATION
Following the completion of the technical studies, the consultant shall prepare a Finding of No Adverse Effect (FNAE) documentto analyze Project effects as related to air quality and cultural

DocuSign Envelope ID: C5BA92C6-E12F-4B61-8A71-5D7114C08DA5

resources using the prepared technical studies. Other topics shall be discussed in a qualitative manner.

The FNAE shall follow Caltrans guidelines, specifically Exhibit 2.8 FNAE Format and Content Guide (April 2020).The consultant shall assume that standard conditions and mitigation measures shall be included in the Project that will eliminate the potential for an adverse effect/impact.

CEQA COMPLIANCE

PREPARE CATEGORICAL EXEMPTION

To support this task, the consultant shall review available information related to the proposed project and analyze applicability of categorical exemption. This includesthe previously prepared Project Description and technical reports prepared under NEPA Compliance Tasks 1 and 2.

The consultant shall prepare a general Summary Report to include the technical documentation necessaryto support the finding for exemptions applicable to all aspects of the project, including but not limited to a Class 1 – Existing Facilities, Categorical Exemption and Class 31 - Historical Resource Restoration/Rehabilitation. The required documentation shall include the description of the project as outlined above, and the summary analysis documenting that the project does not have the potential to create any significant environmental impacts effects, including thoserelated to air quality, and cultural resources, if applicable.

The consultant shall provide the Summary Report to the City for one round of review and revisions. Following finalapproval of the Summary Report by the City, the signed Notice of Exemption shall be filed with the Los Angeles County Clerk's office by the consultant. Additional noticing and/or mailing are not included in this scope of work.

Task 5 Deliverables

- Approved PES forms
- Completed technical studies
- FTIP document
- Approved CE/CE
- Approved Right-of-Way certification
- NOE
- PES
- Technical study for airquality
- Technical study for cultural resources
- APE, HRER, ASR, HPSR,and FNAE reports

TASK 6: UTILITY COORDINATION

The consultant shall anticipate that the City shall provide the Consultant with the required format for the utility notice in Microsoft Wordformat. Said notices shall inform the utility company of the impending construction along the subject corridor.

Adequate potholing services shall be performed by consultant or subcontractors of consultant on as needed basis to determine adequate design of project.

Specific team tasks shall include:

- Coordinate with utility agencies
- Prepare notices and follow up requests with plans to utility companies

DocuSign Envelope ID: C5BA92C6-E12F-4B61-8A71-5D7114C08DA5

- Resolve conflict with the Utility companies as applicable
- Pothole at potential pole locations
- Prepare a memorandum of the findings, conflicts, and relocations/adjustments
- Address utility conflicts prior to 90% design.

Task 6 Deliverables

- Utility outreach documentation
- Neighborhood outreach documentation

DocuSign Envelope ID: C5BA92C6-E12F-4B61-8A71-5D7114C08DA5

Exhibit B

Approved Fee Schedule

The following fee schedule is to provide the services identified in the Scope of Work. Tasks are at a fixed fee for the design services for the program elements.

DocuSign Envelope ID: C5BA92C6-E12F-4B61-8A71-5D7114C08DA5

	KOA									Subconsultants					
Hourly Rates (Fully Burdened):	Principal/ QA/QC Manager $238	Project Manager/ Sr. Engineer $198	Sr. Associate Engineer $114	Construction Manager $180	Construction Inspector $130	Associate Engineer $95	Admin $121	Other Direct Costs	KOA LS	CMS Design JMDiaz	Survey KDM Meridian	Environmental Tetratech Inframark	Potholing Safe Probe	Historical/ Cultural ASM	TEAM TOTAL
BASE DESIGN SERVICES															
Task 1: Background Research															
Background Research		16	24			80	2	$500	$14,231						$14,231
Field Check and Data Collection	2	32	40			80	2	$25,000	$44,200						$44,200
Survey											$59,148				$59,148
Task 1: Subtotal	**2**	**48**	**64**			**160**	**4**	**$ 25,500**	**$ 58,431**	**$ -**	**$ 59,148**	**$ -**	**$ -**	**$ -**	**$117,379**
Task 2: Project Management Services															
Project Meetings/Public Outreach	4	240	60			40	16	$500	$61,569						$61,569
Project Schedule		40	32			32	8	$100	$15,674						$15,674
Task 2: Subtotal	**4**	**280**	**92**			**72**	**24**	**$ 600**	**$ 77,242**	**$ -**	**$ -**	**$ -**	**$ -**	**$ -**	**$77,242**
Task 3: Design Development (PS&E)															
Preliminary Design (30%)	4	160	120			320	2	$250	$77,155					$137,500	$214,715
Preliminary Design (50%)	4	120	60			160	2		$46,974						$46,974
Preliminary Design (90%)	2	80	40			120	2		$32,502						$32,502
Final Design (100%)	2	40	32			60	2		$17,978	$31,558					$49,536
Bid Documents	2	40	20			16	2		$12,439						$12,439
Bidding Services		80	40			24	2	$500	$23,428						$23,428
Task 3: Subtotal	**14**	**520**	**312**			**700**	**12**	**$ 750**	**$ 210,476**	**$ 31,558**	**$ -**	**$ -**	**$ 137,500**	**$ -**	**$379,594**
Task 4: QA/QC															
QA/QC	140								$33,270						$33,270
Task 4: Subtotal	**140**							**$ -**	**$ 33,270**	**$ -**	**$ -**	**$ -**	**$ -**	**$ -**	**$33,270**
Task 5: Environmental															
Historical/Cultural Studies		16						$100	$3,270					$13,342	$16,612
Environmental Documentation		40						$250	$8,175			$76,471			$84,646
Task 5: Subtotal		**56**						**$ 350**	**$ 11,445**	**$ -**	**$ -**	**$ 76,471**	**$ -**	**$ 13,342**	**$101,258**
Task 6: Utility Coordination															
Coordinations		80	60			40		$500	$26,983						$26,983
Permit Facilitations		40	24			20			$12,557						$12,557
Task 6: Subtotal		**120**	**84**			**60**		**$ 500**	**$ 39,540**	**$ -**	**$ -**	**$ -**	**$ -**	**$ -**	**$39,540**
TOTAL BASE DESIGN SERVICES	**160**	**1024**	**552**			**992**	**40**	**$ 27,700**	**$ 430,405**	**$ 31,558**	**$ 59,148**	**$ 76,471**	**$ 137,500**	**$ 13,342**	**$ 788,483**
Work %	6%	37%	20%			36%	1%	58%	4%	8%	10%	17%	7%		

Memorandum

Date: October 19, 2021

To: Shahid Abbas, Director of Public Works, City of South Pasadena

From: Min Zhou, CEO/President, KOA Corporation

Re: Fair Oaks Ave North-South Corridor ITS Deployment Project Clarification of the Detailed Scope of Work

---

KOA Corporation (KOA) would like to clarify the details of the scope of work for the subject project approved by the City Council on August 18, 2021. In addition to the Scope of Services listed in Exhibit A of the executed agreement, KOA is committing to provide the services attached to this memo at no additional cost to the City of South Pasadena. The cost for these additional services is included in the cost proposal submitted by KOA and approved by the City.

Min Zhou
CEO/President
KOA Corporation

Shahid Abbas
Director of Public Works
City of South Pasadena

SECTION 4 | PROJECT UNDERSTANDING AND APPROACH

PROJECT BACKGROUND

The services to be provided consist of assisting the City through the project design and environmental phase of the North-South Intelligent Transportation System Deployment Project (North-South ITS Deployment Project or The Project). The Project is funded by FHWA Rogan funds to improve traffic flow and reduce vehicle congestion along Fair Oaks Avenue between Huntington Drive and Columbia Street (North City Limits.) The City received from Caltrans the E-76 authorization to proceed with effective date of September 9, 2020 on Federal Project No. RABA01-5071(024). The Project has been divided into two distinct phases:

PHASE I

- Approval of System Engineering Review Form (SERF)
- Environmental Certification
- Right of Way Certification.
- Approval of System Requirements and Designs including the concept of operations (ConOps) and System Engineering Management Plan (SEMP).
- Approval of procurement documents

PHASE II

- Phase II includes Deployment/Implementation/ Integration/Procurement/Purchase of components or products.
- Phase II shall not be started until Phase I has been completed.

The following services apply only to Phase I of the Project.

PROJECT ASSUMPTIONS

The proposed Project is preceded by a recently designed Fair Oaks Avenue and Huntington Drive Traffic Signal Improvement Project, known as City Project No. 2017-07, Federal-Aid Project No. 07-507F15, and LACMTA Call for Projects ID No. No. F5308 & FTIP No. LAF5308. That project is expected to begin construction in sometime mid to late 2021.

The Fair Oaks Signal Project will result in the installation of the following:

- emergency vehicle preemption (EVP) systems,
- advanced dilemma video detection at 8 intersections,
- thermal detection, 2070 controllers at 8 intersections,
- replacement of traffic signal controllers at 9 intersections,
- single-mode fiber optic cable from Hope Street to the South Pasadena City Hall and the L.A. County Public Works Building,
- fiber optic connection to the City of Pasadena's traffic signal network at the north end of the City,
- a new traffic signal control system (Intelight MaxView) in South Pasadena City Hall,
- basic signal timing for the new Intelight system replicating the previously existing signal timing, and
- ~~closed circuit CCTV traffic monitoring systems for 11 intersections along Fair Oaks Avenue.~~

It is assumed that the construction of the Fair Oaks Signal Project will be concurrent with the design effort for the North-South ITS Deployment Project.

The engineering design services for the North-South ITS Deployment Project will involve:

- replacing most of the traffic signal poles, including their foundations and associated conduit, on Fair Oaks Avenue at eleven signalized intersections from Columbia Street (shared with City of Pasadena)

to the north and Huntington Drive to the south terminus,
- upgrading associated traffic signal equipment at those intersections, including signal heads and conduits,
- relocating vehicle detectors, emergency vehicle preemption equipment, and CCTV systems (if applicable) to the new signal poles,
- upgradation of South Pasadena's central traffic control system to an advance adaptive traffic management system (AATMS),
- installation of changeable message signs at decision points for north-south commuters along Fair Oaks Avenue and Fremont Avenue,
- installation of travel time and delay sensing equipment at selected locations to monitor travel for the north-south commute,
- developing new traffic signal timing plans for the traffic signals connected to the City's traffic control system.,
- modifying median island noses for the left turn lanes on Fair Oaks Avenue, and
- upgrading sidewalks and crosswalks affected by construction to conform to ADA standards.
- Closed Circuit Television (CCTV) traffic monitoring systems at eleven signalized intersections.

COMPONENTS OF DESIGN

There are four major components which makes up the project:

1. ITS DEPLOYMENT

Upgrade the traffic signals to deploy a functioning ITS at the signalized intersections along Fair Oaks Avenue within the City limits. The upgrades include decorative poles and mast arms, signal heads, Accessible Pedestrian Signal (APS), Internally Illuminated Street Name Signs (IISNS), and cabinets. The deployment of theITS shall facilitate:

- Advance Adaptive Traffic Management System (AATMS).
- Travel time and delay monitoring system along Fair Oaks Avenue and Fremont Avenue corridors
- Queue detection system.
- Infrared bike, pedestrian, and vehicle detection.
- Advanced Adaptive pedestrian crossing control and warning system.
- Dilemma zone detection system.
- Emergency vehicle detection.
- Transit signal priority.
- Changeable Message Signs (CMS) for relaying real- time travel time information to the motorists.
- CCTV monitoring and control systems including associated software.

2. ADA COMPLIANCE

Survey all curb ramps in the vicinity of the project intersections for ADA compliance and median island nose reconstructions. Also, sidewalk, and crosswalk improvements may be needed at select locations near each intersection to increase pedestrian safety at the 110 Freeway Interchange.

3. INTEGRATED CORRIDOR MANAGEMENT (ICM)

Install changeable message signs (CMS's) (two) to provide real-time travel time information, wayfinding, and alternative route directions for drivers. The CMS system will also display and relay amber alerts, and other miscellaneous customized emergency and informatory messages. This entails CMSs on structures connected to cabinets, fiber optic, and associated electronic equipment. As a part of the ICM strategies, KOA also propose to add two digital Trailblazer signs along Fremont Avenue so to more effectively inform travelers and commuters of upcoming traffic related notifications and diversions. These signs would be smaller in scale compared to the other two CMS signs. These signs could be mounted on existing poles if available or on new poles.

For the travel time delay monitoring system along Fair Oaks Avenue and Fremont Avenue, Bluetooth, WiFi, and/or tire pressure monitoring system detectors could be mounted on signal poles at selected locations. **We are aware that there is no communication running along Fremont Ave; we would**

identify wireless option for the Travel and Delay Monitoring System and Trailblazer signs to communicate to the other 2 CMSs having fiber infrastructure. CMS software architecture will be adjusted to depict accurate travel times along both corridors. The validation of the travel times will be obtained by conducting real time travel runs along the corridors, and the necessary adjustment to CMS architecture be made.

4. TRAFFIC SIGNAL SYNCHRONIZATION

Provide traffic signal timing plans for AM Peak, PM Peak, Mid-Day, and Weekends to complete the project. This requires data collection on Tuesday through Thursday 24-hour directional counts, and turning movement counts.

The counts will be classified which would include heavy vehicles, pedestrians and bikes. Historic pre-pandemic counts will be used where available. The counts will then be adjusted to reflect the expected post-pandemic conditions. Initial Traffic Signal Timings will be prepared after which field adjustments will be required of the calculated timings to ensure efficient traffic progression and signal coordination. Before and after travel runs will be conducted to compare the MOE's such as Level of Service(LOS), travel times, control and accumulative corridor delays, queue lengths, and emission reductions during AM, PM, Mid-day, and Weekend peaks.

OVERALL PROJECT APPROACH

KOA recognizes that the success of any design- related project relies on the skills and experience of the team members involved in managing the project,understanding key project challenges, and providing value, quality work, and responsive service to the City. Our approach to any grant-funded project is to maximize the use of funds for construction and equipment purchases and minimize the design cost. Our team member and system integrator has extensive experience providing IT solutions, communication design, and systems integration support throughout LA County and Southern California.

Provided below is KOA's proposed project approach to the scope of work.

EXISTING CONDITIONS

The City is in the process of installing new equipment along the Fair Oaks Avenue corridor from Columbia Street to Huntington Drive and Fremont Avenue from Mission Street to Los Angeles County Traffic ManagementCenter (TMC) at Orange Street in the City of Alhambra.

The project included the installation of various traffic signal system items, including new emergency vehicle preemption (EVP) systems, Ethernet switches, fiber hub switches, Ethernet modules, advanced dilemma video detection, thermal detection, 2070 controllers, , SMFO cable, conduits, system integration, splice vaults and fiber patch panels. We will identify salvaged equipment and, where practical, incorporate some of them into the design.

SIGNAL SYSTEM IMPROVEMENTS

The intersection improvements for this project will include new signal timing, improved signal system hardware and software, advance dilemma zone detection,emergency vehicle preemption, and as-needed curb ramp ADA upgrades. With our very recent work on the same corridor, we are fully aware of these location needs. We are confident that this work can be completed within the proposed budget. We will coordinate closely with the City fire department to make sure of the number of vehicles that use the corridor for emergency purposes. This is to budget for number of GPS emitters which will communicate to the road side EVP unit mounted on a traffic signal pole at each intersection. For the new traffic signal mast arms, we would design one signal head per lane with Yellow retro-reflective strips on the backplate as provisioned under CA-MUTCD (Optional requirement for now). We will call out for the salvage of all removed trafficsignal equipment to the City yard.

KOA will provide recommendations for the implementation of the ATMS program, network, and system integration. The ATMS will achieve integration with other traffic signals by establishing communication

links with Metro's Regional Integration of Intelligent Transportation Systems (RIITS) via a new connection with the County's Information Exchange Network (IEN) and its San Gabriel Valley sub-region. As a part of this regional integration, the City is planning to install 48 SMFO on Fremont Avenue from the city limit to LA County. We're aware that for a congested corridor like Fair Oaks Avenue,the proposed Adaptive technology might not be fully effective during the peak periods, however, it is known to produce great positive impact during off-peak hours with floating green option. At the end of the day, our team will make sure that all systems are validated and integrated for City's acceptance. We will provide certifications accordingly.

KOA is experienced with the various approved traffic control systems (TCS) such as Intelight/Maxview to remotely monitor and control intersections. We will design for capabilities to remotely view video from existing video detection cameras.

SIGNAL OPERATIONS AND COORDINATION

KOA will utilize the latest edition of Synchro to generatethe proposed traffic progression model along the corridors. We will analyze the operational data and field observations of the transportation corridors, including existing signal plans, and identify the traffic progression issues along the corridors to determine the optimum signal synchronization improvement.

KOA's optimization plan will focus to reduce stops, manage queues, and maintain vehicle platoons. Our process works from big to small; it starts with network intersection groupings based on the distance between each signal on the subject corridor and controlling stopping points, after which we evaluate traffic signal phasing, offsets, and splits to enhance intersection and system-wide operations. This is done through an iterativeprocess of analysis and data transfer between Synchro/ SimTraffic and TruTraffic. Key factors in this process are:

- Cycle Length & Phase Split Probability
- Volume Demand Fluctuations
- Controller Operation

KOA will obtain existing signal timing parameters from the City. We will not be using a typical approach of assuming standard saturation and other factors in the software to build our micro-model. We will meet with theCity staff to discuss preferred saturation flow rates (not the standard 1,900vphpl), traffic signal timing constraints and preferences etc. Based on the counts and timing data, we will prepare signal synchronization adjustments to the existing signal plans along with appropriate timing plans according to the existing operations.

We will suggest half-cycle or double-cycle options at select intersections to gain the maximum benefit out of the corridor optimization. We have noted a couple of intersections are very close to each other and controlledby one controller, we would evaluate and recommend having a possibility of using separate controller at each location for better operations.

We will use the state-of-the-art software and hardware at the TMC to make sure those timing plans are selected by new traffic responsive/adaptive system at the most opportune times. KOA will prepare final timing charts stamped by a licensed traffic engineer. Timing charts will include all base operational timing and coordination data,time-of-day programming, and any suggested changes in other timing operations. KOA staff will implement new timing plans into each project intersection from thenew TMC work station. KOA will review timings in the field and fine-tune as needed, based on observations obtained while driving through the corridors. These changes will likely include intersection offsets and other minor adjustments to refine the optimized timing plans.

KOA will report these recommendations to the City in a technical memorandum with attachments, includingrevised Synchro time-space diagrams and controller timing sheets.

ADAPTIVE/RESPONSIVE SIGNAL TIMINGAND SYNCHRONIZATION

We will prepare signal synchronization adjustments to the existing signal plans along traffic corridors

according to the signal operations and traffic demand. KOA will generate a traffic progression model along FairOaks Avenue to demonstrate the effectiveness of the newly installed fiber network improvement, Adaptive/ Responsive system, and signal plan upgrade. We will analyze the operational data and field observations of the transportation corridors, including existing signal plans, and identify the traffic progression issues along thecorridor to determine the optimum signal synchronization improvement. We will work with Intelight/MaxView system that will be installed by the time this project kicks-in. This system is already compatible with 2070 ATCcontrollers, communication infrastructure, and detection system. We will evaluate for the possibility of additional detection zone installation at each block which would act as System detectors.

BEFORE/AFTER STUDIES

KOA will conduct a travel time study to establish "before"or pre-project conditions. Our staff shall drive along the project corridor at least five times in each direction during AM/MD/PM and weekend peak periods.

Observation of the existing travel conditions of the project corridors will be done with a before study, using the floating car method paired with GPS tracking software (Tru-Traffic) and dash-mounted video recordingsto create a synced before and after synchronization comparison videos. Key MOEs will be tracked, with emphasis on controlled and accumulative corridor delays, LOS, queue lengths, fuel consumptions, emissions, average travel time, speed, and number of stops. We will ensure consistency between travel runs and traffic flow.

After initial implementation of new optimized timing plans, the public will need approximately 2 weeks' time to adjust to the coordinated timing plans before "After"travel runs can be conducted. After study travel time surveys will be conducted in the same manner and method as the before travel time surveys. The MOEs utilized in the before study will be compared to the sameMOEs from the optimized models and travel time runs.

KOA will prepare a final performance report and present a comparison of the before and after studies.

SIGNAL TIMING IMPLEMENTATION AND FINE-TUNING

We will coordinate new signal timing implementation with city staff. Besides, our team will thoroughly check the results of the timing plans in the field during implementation to ensure that the signals are behaving properly, and as intended. Upon completion of implementation of all new signal timings, monitoring and fine tuning follows next. We will fine tune the intersectionover a week period which should cover all peaks and off- peaks demands. Rest assured, KOA will provide extensive field monitoring and fine-tuning of the signal timing to the satisfaction of the City staff.

KOA will use the existing timing sheets, traffic volumes, and field reviewed data in the construction of Existing Conditions network models using Synchro 10 software. These network files will be created to model the inventoried and agreed-upon input. Additional Synchro calibration will include comparison with observed existingoperation from initial travel runs using Tru-Traffic and dash cam video to ensure it is accurately replicated. Theseexisting models will be submitted for Agency review.

The final performance statistics generated by Synchro and Tru-Traffic for existing conditions will be used as the benchmark for the evaluation of coordinated plans.Existing intersection operational parameters will be summarized to highlight the model coding to include base assumptions for detectors, cycle lengths, sync phases, offsets, and force-offs.

KOA's optimization plan will focus on reducing stops, managing queues, and maintaining vehicle platoonson project corridors. Our process works big to small using Synchro and TruTraffic software programs. Our optimizations method will be compared to the baseline condition and the results of prior approaches until a trueoptimum plan is found. The final optimized networks will be submitted to the City for review, accompanied by a tech memo summary outlining the various proposed coordination plan inputs, including cycle lengths; offsets;sync points; free, isolated or coordinated operation; and force-offs

or splits assumed.

Based on our experience on similar projects, a numberof signal timing improvements could be made through careful field observations subsequent to the implementation of new signal timings. For example, the offsets may be fine-tuned to coincide with arrival of the platoons so that waiting queues are dispersed prior to their arrival; green splits may be adjusted to balance the demand of the different approaches; cycle lengths may be modified to reduce delays ; etc. The hours spent in thefield during implementation and fine-tuning is extremely important towards successfully implementing improved signal timings with perceptible differences. More time spent in the field will invariably lead to improved signal timings.

Therefore, our staff will observe the field traffic conditionsduring the key time periods to assist the City in fine- tuning the signal timings. We have done this for all our signal timing implementation projects, and found that to be critical towards successful implementation ofoptimized and responsive signal timing.

CHANGEABLE MESSAGE SIGNS (CMS)

Proposed designs will be prepared in accordance withCity, Caltrans Standard Plans and Manual of Uniform Traffic Control Devices (MUTCD) requirements. The design will also include 2 additional digital Trailblazer signs (TBS).

JMD will prepare a CMS detail sheet containing design details for the proposed equipment. The plans will be prepared at a scale of 1"=20' and will include site layout, equipment and conductor schedules as well as detail CMSequipment needed.

SURVEY

KDM will provide surveying for the project. Horizontal and vertical datums, together with reference stations (e.g., benchmarks) intended to be used will be confirmedwith the City prior to survey work being undertaken. A complete datum statement indicating datums, reference stations, and benchmarks used will be created for inclusion in the design documents.

KDM will perform standard centerline and right-of-way research with the County of Los Angeles and City of South Pasadena to obtain record maps and centerline tieinformation.

A control survey to locate existing survey monuments, required aerial targeting points, and supplemental intersection control points will be performed using a variety of survey techniques including GPS, total stations,and leveling.

KDM will coordinate with an aerial mapping subconsultant to collect traditional aerial photogrammetric mapping of Fair Oaks Avenue from Huntington Drive to Columbia Street. This mapping will consist of a 200-foot-wide strip at 1-inch = 40-foot scalewith 1-foot interval contours. At intersecting streets, mapping will extend 300 feet from the centerline of Fair Oaks Avenue, except for Huntington Drive where the mapping will extend to 600 feet from Fair Oaks Avenue. Existing survey monuments and centerline ties found within the project limits will be identified on the base mapping with the intention that the design documents call for a record of survey to be filed by others prior and post construction to perpetuate or preserve the locationof monuments disturbed by construction activities.

The aerial mapping will be augmented by a field survey tolocate and identify surface indications of utilities. Points representing the surface indication of utilities will be added to the aerial mapping base map and symbols will be edited to indicate specific utility type (where surface markings allow).

A detailed field survey of each of the fourteen intersections along Fair Oaks Avenue within the project reach will be performed. These surveys will be providedat a 1-inch = 20-foot scale (unless an alternate scale is requested) including 50' outside of the intersectionfor the purpose of allowing design of traffic signal systems, ADA curb ramp upgrades, and median nose reconstruction.

A detailed field survey for each of four locations wherea CMS or TBS will be installed will be performed. Thesesurveys will be provided at a 1-inch = 20-foot scale (unless an alternate scale is requested) including

200’ of roadway centered on the proposed location of the signage.

The record centerline and rights-of-way from publiclyavailable maps will be generated and drafted into thetopographic survey base map which will be provided as an AutoCAD drawing and in a final signed PDF deliverable.

NOTE
Monument preservation is not included within these scope and fees. Found record monuments used for indicating apparent street C/L and R/W will be noted within base mapping. The RFP indicates that the design documents will address that a record of survey be filed prior and post construction and it is assumed this will bea requirement of the PS&E’s.

Street C/L, R/W, and portions of lot lines will be shown schematically from existing and available record maps and found record monuments within the proposed project limits. Lines depicted within the base mapping willbe form these record maps only and will not constitute or represent establishment of such lines.

Field survey and topographic mapping, except for the detailed curb return surveys at the fourteen intersectionswill be collected by aerial photogrammetric mapping and is intended for the project defined use (i.e., traffic signal improvements). It is not intended to be sufficient for alternate uses not specified (e.g., street widening, reprofiling, or other general civil improvements).

POTHOLE

SAFEPROBE shall provide subsurface exploration servicesas per the following:

- Provide equipment, skilled personnel, trained technician and supplies necessary to perform utility location services (potholing), utilizing air/vacuum soil extraction method.
- Provide electronic equipment, skilled personnel and trained technician if requested to perform electronic designation.
- Contact Underground Service Alert (USA), mark areas for USA and coordinate with utility owners alerted by USA.
- Soil will be air/vacuum extracted from the test holes to expose the utility to be measured, in such manner to insure the safety and integrity of the utility.
- The disturbed areas will be restored, as neatly as reasonably possible to the condition prior to the soil extraction process.
- SAFEPROBE shall follow compaction requirements set forth by existing APWA Specification Standards. Backfill materials will comply with the City requirements.
- Provide the following information for each test hole:
- Utility will be measured to one tenth of a foot from existing ground to top of utility, identified as to type, location, and size of pipe.
- Located by nail placed in asphalt or flags where only soil exists.
- Photo of each exposed found utility
- The location of the potholes will be as per drawings and plans from Client indicating the locations of the proposed potholes.
- The number of the potholes should be done in 35 to 45 working days depends on the soil and traffic conditions.

NOTE
Encroachment Permit fees, if any, will be provided or reimbursed by the Client.

FEDERAL/STATE GUIDELINES COMPLIANCE

KOA staff specializes in applying and managing various Caltrans funding grants. We are experienced with Caltrans Guidelines for state and federal funds of variouscomplexities, managing project invoices and Caltrans billings, and maintaining compliance with the 2021 Local Assistance Procedures Manual (LAPM) and Local Assistance Program Guidelines (LAPG). We understand that the City received authorization (E-76) from Caltrans on September 16, 2020. The effective date ofauthorization for Federal Project No.

RABA01-5071(024) is September 9, 2020 and that the project has an approved FTIP. Our staff is familiar with the provisions of Chapter 10 of the 2021 LAPM, DBE requirements, Good Faith Efforts, Caltrans review Processand all other relevant LAPM chapters for federal-aid projects.

We have managed several federal-aid projects for theagencies across Southern California during the designphase of the project and also obtained authorization to proceed (E-76) for construction. We were able to adjust federal billings should the project cost defer from the allocated federal funds. KOA has administered construction contracts, prepared project completion andsupplemental forms, conducted pre-construction, mid and post project oversight with agencies and Caltrans oversight engineer.

Even though the City does not foresee acquisition of any right-of-way take for this project, right-of-way certification, Exhibit 13-A, 13-B will be filled out whether or not right-of-way acquisition is required by the project.

One other important item to note that, even though, the City already has an approved E-76 for the construction phase, however, the document will need to be re-certifiedat the end of the PS&E phase which is allowed to utilize the funding from construction phase due to the nature of the project (ITS type). Our staff is experienced in preparing/modifying Request for Authorization E-76to proceed with Construction and all the required Federal-Aid Contract Language (DBE, FHWA 1273, etc.).KOA staff are very familiar with Local Agency Invoicing,LAPM 5-A (Rev 08/2020) for Federal-aid projects and the requirements of Final Invoices and the supporting documents.

ADA COMPLIANCE

Each intersection will be evaluated for conformance to Americans with Disabilities Act (ADA) requirements, and with consideration of the Caltrans Curb Ramp ComplianceInspection Report Forms (CEM-5773) for the applicable ramp type, and Caltrans Standard Plan A88A. For each intersection, we will evaluate a complying ADA path of travel free from obstructions, slopes, pedestrian push button height and location, crosswalk markings and curb ramps. In addition, we will evaluate pedestrian safety, such as the proximity to traffic while waiting for street crossings, sight distance, school signage, and crosswalk location. Also, we will evaluate median noses for the possibility of obstructing turning traffic.

City Council Agenda Report

ITEM NO. 13

DATE: June 18, 2025

FROM: Todd Hileman, City Manager

PREPARED BY: Roxanne Diaz, City Attorney

SUBJECT: **CONSIDERATION OF A LETTER OPPOSING SENATE BILL 79 (WIENER) TRANSIT-ORIENTED DEVELOPMENT**

Recommendation

Authorize the Mayor to send a letter of opposition to Senate Bill 79 (Wiener) Transit-Oriented Development on behalf of the City Council to the appropriate stated legislators.

Background

On January 15, 2025, Senate Bill 79 ("SB79") was introduced by Senator Scott Wiener and has been making its way through the legislative process. Recently, it passed the State Senate by one vote and now it moves onto the Assembly. SB 79 will first be heard by the Housing and Local Government committee in the Assembly as well as the Appropriations Committee. We believe this will occur in July and August 2025. If SB 79 goes to the Assembly floor, that will likely be in August. SB 79 will need 41 votes to pass in order to be sent to the Governor's office. Calcities has reached out to City Managers throughout the state to let cities know there is still time to weigh in on SB 79. The Calcities opposition letter is provided as Attachment 1 as is the form letter for cities to use if they desire to voice their opposition to SB 79 (Attachment 2).

Analysis

Calcities is leading the charge in opposing SB 79 due to its impact on local governments' land use authority and its one-size-fits-all appropriate to local planning and zoning. SB 79 will establish state mandated zoning standards around train stations and major bus stops for ministerial high-density residential mixed-use projects (with housing). The projects would need to be within 1/4 mile or 1/2 mile of a defined transit-oriented development stop. In South Pasadena this means the light rail station in the downtown. This approach under SB 79 (for those areas in the City that would be impacted) would essentially disregard the City's zoning as well as the City's current efforts related to the implementation of Measure SP that the Planning Commission is thoughtfully undertaking. On land owned by transit agencies, SB 79 authorizes the transit agency to develop land they own or lease, including property beyond transit-adjacent areas, without any regard to the city's land use and zoning laws and without input from the City.

The City is committed to the development of affordable housing as demonstrated by the number of initiatives undertaken by the Community Development Department, including the implementation of Measure SP as well as the City's own senior affordable housing project on El Centro and Mound in partnership with the Related Company. SB 79, however does not

ensure that meaningful affordable housing development will occur in a manner that aligns with our local needs. If authorized to send a letter opposing SB 79, staff will work with the Mayor in drafting a letter to demonstrate the impacts on South Pasadena and encourage our state legislatures to find more effective ways to help cities in these efforts.

Fiscal Impact
There is no fiscal impact if the City authorizes a letter to be sent.

Attachment:
Attachment No. 1 - SB 79 (Wiener) TOD Oppose Letter
Attachment No. 2 - Form of Letter From CalCities - SB 79
Attachment No. 3 - Current Text of SB 79

March 26, 2025

The Honorable Scott Wiener
Senator, California State Senate
1021 O St, Suite 8620
Sacramento, CA 95814

RE: SB 79 (Wiener) Transit-oriented Development
Notice of Opposition

Dear Senator Scott Wiener,

The League of California Cities writes to express our strong opposition to your SB 79 (Wiener), which would disregard state-certified housing elements and bestow land use authority to transit agencies without any requirement that developers build housing, let alone affordable housing.

SB 79 doubles down on the recent trend of the state overriding its own mandated local housing elements. This latest overreaching effort forces cities to approve transit-oriented development projects near specified transit stops — up to seven stories high and a density of 120 homes per acre — without regard to the community's needs, environmental review, or public input.

Most alarmingly, SB 79 defies cities' general plans and provides transit agencies unlimited land use authority on property they own or have a permanent easement, regardless of the distance from a transit stop. Transit agencies would have the power to determine all aspects of the development including height, density, and design, without any regard to local zoning or planning.

This broad new authority applies to both residential and commercial development. Transit agencies could develop 100% commercial projects — even at transit stops — and not provide a single new home, while simultaneously making the argument that more housing must be constructed around transit stops.

Cal Cities appreciates and respects your desire to pursue a housing production proposal. However, as currently drafted, SB 79 will not spur much-needed housing construction in a manner that supports local flexibility, decision-making, and community input. State-driven ministerial or by-right housing approval processes fail to recognize the extensive public engagement associated with developing and adopting zoning ordinances and housing elements.

California will never produce the number of homes needed with an increasingly state-driven, by-right housing approval process. What we really need is a sustainable state investment that matches the scale of this decades-in-the-making crisis. For these reasons, Cal Cities opposes SB 79. Please do not hesitate to contact me to discuss this in greater detail at (916) 658-8264.

Sincerely,

Jason Rhine, Senior Director, Legislative Affairs

FORM OF LETTER FROM CAL CITIES

Attachment No. 2

DATE

The Honorable Scott Wiener
Senator, California State Senate
1021 O St, Suite 8620
Sacramento, CA 95814

RE: <u>SB 79 (Wiener) Transit-oriented Development</u>
Notice of Opposition

Dear Senator Wiener,

The City/Town of _____ writes to express our strong opposition to your SB 79 (Wiener), which would disregard state-certified housing elements and bestow land use authority to transit agencies without any requirement that developers build housing, let alone affordable housing.

SB 79 doubles down on the recent trend of the state overriding its own mandated local housing elements. This latest overreaching effort forces cities to approve transit-oriented development projects near specified transit stops — up to seven stories high and a density of 120 homes per acre — without regard to the community's needs, environmental review, or public input.

Most alarmingly, SB 79 defies cities' general plans and provides transit agencies unlimited land use authority on property they own or have a permanent easement, regardless of the distance from a transit stop. Transit agencies would have the power to determine all aspects of the development including height, density, and design, without any regard to local zoning or planning.

This broad new authority applies to both residential and commercial development. Transit agencies could develop 100% commercial projects — even at transit stops — and not provide a single new home, while simultaneously making the argument that more housing must be constructed around transit stops.

City/Town of _____ appreciates and respects your desire to pursue a housing production proposal. However, as currently drafted, SB 79 will not spur much-needed housing construction in a manner that supports local flexibility, decision-making, and community input. State-driven ministerial or by-right housing approval processes fail to recognize the extensive public engagement associated with developing and adopting zoning ordinances and housing elements.

California will never produce the number of homes needed with an increasingly state-driven, by-right housing approval process. What we really need is a sustainable state investment that matches the scale of this decades-in-the-making crisis. For these reasons, the City/Town of _____ strongly opposes SB 79.

FORM OF LETTER FROM CAL CITIES

Sincerely,

NAME
TITLE
CITY/TOWN of _____

cc. Your Senator & Assembly Member
Your League Regional Public Affairs Manager (via email)
League of California Cities, cityletters@cacities.org

AMENDED IN SENATE MAY 29, 2025

AMENDED IN SENATE MAY 28, 2025

AMENDED IN SENATE MAY 13, 2025

AMENDED IN SENATE APRIL 23, 2025

AMENDED IN SENATE APRIL 9, 2025

AMENDED IN SENATE MARCH 5, 2025

SENATE BILL No. 79

Introduced by Senator Wiener

January 15, 2025

An act to add Chapter 4.1.5 (commencing with Section 65912.155) to Division 1 of Title 7 of the Government Code, and to add Section 21080.26.5 to the Public Resources Code, relating to land use.

LEGISLATIVE COUNSEL'S DIGEST

SB 79, as amended, Wiener. Housing development: transit-oriented development: California Environmental Quality Act: public transit agency land.

(1) Existing law, the Planning and Zoning Law, requires each county and city to adopt a comprehensive, long-term general plan for the physical development of the county or city, and specified land outside its boundaries, that contains certain mandatory elements, including a land use element and a housing element. Existing law requires that the land use element designate the proposed general distribution and general location and extent of the uses of the land, as specified. Existing law requires that the housing element consist of an identification and analysis of existing and projected housing needs and a statement of goals,

policies, quantified objectives, financial resources, and scheduled programs for the preservation, improvement, and development of housing, as specified. Existing law requires that the housing element include, among other things, an assessment of housing needs and an inventory of resources and constraints that are relevant to the meeting of these needs, including an inventory of land suitable for residential development, as provided. Existing law, for the 4th and subsequent revisions of the housing element, requires the Department of Housing and Community Development to determine the existing and projected need for housing for each region, as specified, and requires the appropriate council of local governments, or the department for cities and counties without a council of governments, to adopt a final regional housing need plan that allocates a share of the regional housing need to each locality in the region.

Existing law, the Housing Accountability Act, among other things, requires a local agency that proposes to disapprove a housing development project, as defined, or to impose a condition that the project be developed at a lower density to base its decision on written findings supported by a preponderance of the evidence that specified conditions exist if that project complies with applicable, objective general plan, zoning, and subdivision standards and criteria in effect at the time that the application was deemed complete. The act authorizes the applicant, a person who would be eligible to apply for residency in the housing development project or emergency shelter, or a housing organization to bring an action to enforce the act's provisions, as provided, and provides for penalties if the court finds that the local agency is in violation of specified provisions of the act.

This bill would require that a housing development project, as defined, proposed within a specified distance of a transit-oriented development (TOD) stop, as defined, be an allowed use on any site zoned for residential, mixed, or commercial development, if the development complies with applicable requirements, as specified. The bill would establish requirements concerning height limits, density, and floor area ratio in accordance with a development's proximity to specified tiers of TOD stops, as provided. The bill would provide that, for the purposes of the Housing Accountability Act, a proposed development consistent with the applicable standards of these provisions shall be deemed consistent, compliant, and in conformity with prescribed requirements, as specified. The bill would provide that a local government that denies a project meeting the requirements of these provisions located in a

high-resource area, as defined, would be presumed in violation of the Housing Accountability Act, as specified, and immediately liable for penalties, as provided. The bill would specify that a development proposed pursuant to these provisions is eligible for streamlined, ministerial approval pursuant to specified law, except that the bill would exempt a project under these provisions from specified requirements, and would specify that the project is required to comply with certain affordability requirements, under that law.

This bill would require a proposed development to comply with specified requirements under existing law relating to the demolition of existing residential units and to include housing for lower income households, as specified. The bill would also authorize a transit agency to adopt objective standards for both residential and commercial development proposed pursuant to these provisions if the development would be constructed on land owned by the transit agency or on which the transit agency has a permanent operating easement, if the land is within ½ mile of a TOD stop and the objective standards allow for the same or greater development intensity as allowed by local standards or applicable state law.

This bill would authorize a local government to enact a local TOD alternative plan as an amendment to the housing element and land use element, and would exempt a local government that has enacted a local TOD alternative plan from the above-specified provisions. The bill would require the plan to maintain at least the same total increase in feasible zoned capacity, in terms of both total units and residential floor area, as provided by these provisions across all TOD zones, as defined. The bill would require a local government, except as provided, to submit the draft plan to the department and would require the department to assess the plan and recommend changes to remove unnecessary constraints on housing.

This bill would require the Department of Housing and Community Development to oversee compliance with the bill's provisions, including, but not limited to, promulgating specified standards relating to the inventory of land included within a county's or city's housing element. The bill would authorize the regional council of governments or metropolitan planning organization to create a map of designated TOD stops and zones, which would have a rebuttable presumption of validity. The bill would authorize a local government to enact an ordinance to make its zoning code consistent with these provisions, as provided. The bill would require the local government to submit a copy of this

ordinance to the department within 60 days of enactment and would require the department to review the ordinance for compliance, as specified. If the department finds an ordinance is out of compliance, and the local government does not take specified steps to address compliance, the bill would require the department to notify the local government in writing and authorize the department to notify the Attorney General, as provided.

This bill would define various terms for its purposes and make related findings and declarations.

This bill would include findings that changes proposed by this bill address a matter of statewide concern rather than a municipal affair and, therefore, apply to all cities, including charter cities.

(2) Existing law, the California Environmental Quality Act (CEQA), requires a lead agency, as defined, to prepare, or cause to be prepared, and certify the completion of an environmental impact report on a project that it proposes to carry out or approve that may have a significant effect on the environment or to adopt a negative declaration if it finds that the project will not have that effect. CEQA also requires a lead agency to prepare a mitigated negative declaration for a project that may have a significant effect on the environment if revisions in the project would avoid or mitigate that effect and there is no substantial evidence that the project, as revised, would have a significant effect on the environment. CEQA, until January 1, 2030, exempts from its requirements certain transportation-related projects if specified requirements are met, as provided. CEQA includes within these exempt transportation-related projects a public project for the institution or increase of bus rapid transit, bus, or light rail service, or other passenger rail service, that will be exclusively used by low-emission or zero-emission vehicles, on existing public rights-of-way or existing highway rights-of-way.

This bill would exempt from CEQA a public or private residential, commercial, or mixed-used project that, at the time the project application is filed, is located entirely or principally on land owned by a public transit agency, or fully or partially encumbered by an existing operating easement in favor of a public transit agency, and meets specified requirements. The bill would provide that, for a project that requires the construction of new passenger rail storage and maintenance facilities at a publicly or privately owned offsite location distinct from the principal project site, that project would be considered a wholly

separate project from the project described in these provisions and shall not be exempt from CEQA.

(3) This bill would provide that the provisions of this bill are severable.

(4) By increasing the duties of local officials, this bill would impose a state-mandated local program.

The California Constitution requires the state to reimburse local agencies and school districts for certain costs mandated by the state. Statutory provisions establish procedures for making that reimbursement.

This bill would provide that no reimbursement is required by this act for a specified reason.

Vote: majority. Appropriation: no. Fiscal committee: yes. State-mandated local program: yes.

The people of the State of California do enact as follows:

SECTION 1. Chapter 4.1.5 (commencing with Section 65912.155) is added to Division 1 of Title 7 of the Government Code, to read:

Chapter 4.1.5. Transit-Oriented Development

65912.155. The Legislature finds and declares all of the following:

(a) California faces a housing shortage both acute and chronic, particularly in areas with access to robust public transit infrastructure.

(b) Building more homes near transit access reduces housing and transportation costs for California families, and promotes environmental sustainability, economic growth, and reduced traffic congestion.

(c) Public transit systems require sustainable funding to provide reliable service, especially in areas experiencing increased density and ridership. The state does not invest in public transit service to the same degree as it does in roads, and the state funds a smaller proportion of the state's major transit agencies' operations costs than other states with comparable systems. Transit systems in other countries derive significant revenue from transit-oriented development at and near their stations.

65912.156. For purposes of this chapter, the following definitions apply:

(a) "Adjacent" means sharing a property line with a transit stop, including any parcels that serve a parking or circulation purpose related to the stop.

(b) "Commuter rail" means a rail transit service not meeting the standards for heavy rail or light rail, excluding California High-Speed Rail and Amtrak Long Distance Service.

(c) "Department" means the Department of Housing and Community Development.

(d) "Frequent commuter rail" means a commuter rail service with a total of at least 24 daily trains per weekday across both directions and not meeting the standard for very high or high-frequency commuter rail at any point in the past three years.

(e) "Heavy rail transit" means an electric railway with the capacity for a heavy volume of traffic using high-speed and rapid acceleration passenger rail cars operating singly or in multicar trains on fixed rails, separate rights-of-way from which all other vehicular and foot traffic are excluded, and high platform loading.

(f) "High-frequency commuter rail" means a commuter rail service operating a total of at least 48 trains per day across both directions at any point in the past three years.

(g) "High-resource area" means a highest resource or high-resource neighborhood opportunity area, as used in the opportunity area maps published annually by the California Tax Credit Allocation Committee and the department.

(h) "Housing development project" has the same meaning as defined in Section 65589.5.

(i) "Light rail transit" includes streetcar, trolley, and tramway service.

(j) "Net habitable square footage" means the finished and heated floor area fully enclosed by the inside surface of walls, windows, doors, and partitions, and having a headroom of at least six and one-half feet, including working, living, eating, cooking, sleeping, stair, hall, service, and storage areas, but excluding garages, carports, parking spaces, cellars, half-stories, and unfinished attics and basements.

(k) "Rail transit" has the same meaning as defined in Section 99602 of the Public Utilities Code.

(*l*) "Residential floor area ratio" means the ratio of net habitable square footage dedicated to residential use to the area of the lot.

(m) "Tier 1 transit-oriented development stop" means a transit-oriented development stop within an urban transit county served by heavy rail transit or very high frequency commuter rail.

(n) "Tier 2 transit-oriented development stop" means a transit-oriented development stop within an urban transit county, excluding a Tier 1 transit-oriented development stop, served by light rail transit, by high-frequency commuter rail, or by bus service meeting the standards of paragraph (1) of subdivision (a) of Section 21060.2 of the Public Resources Code.

(o) "Tier 3 transit-oriented development stop" means a transit-oriented development stop within an urban transit county, excluding a Tier 1 or Tier 2 transit-oriented development stop, served by frequent commuter rail service or by ferry service; or any transit-oriented development stop not within an urban transit county; or any major transit stop otherwise so designated by the applicable authority.

(p) "Transit-oriented development stop" means a major transit stop, as defined by Section 21155 of the Public Resources Code, served by heavy rail transit, very high frequency commuter rail, high frequency commuter rail, light rail transit, bus service meeting the standards of paragraph (1) of subdivision (a) of Section 21060.2 of the Public Resources Code, frequent commuter rail service, or ferry service, or otherwise so designated by the applicable authority.

(q) "Urban transit county" means a county with more than 15 rail stations.

(r) "Very high frequency commuter rail" means a commuter rail service with a total of at least 72 trains per day across both directions at any point in the past three years.

65912.157. (a) A housing development project within one-half or one-quarter mile of a transit-oriented development stop shall be an allowed use on any site zoned for residential, mixed, or commercial development, if the development complies with the applicable of all of the following requirements:

(1) For a residential development within one-quarter mile of a Tier 1 transit-oriented development stop, all of the following apply:

(A) A development may be built up to 75 feet high, or up to the local height limit, whichever is greater.

(B) A local government shall not impose any maximum density of less than 120 dwelling units per acre. The development proponent may seek a further increased density in accordance with applicable density bonus law.

(C) A local government shall not enforce any other local development standard or combination of standards that would prevent achieving a residential floor area ratio of up to 3.5.

(D) A development that otherwise meets the eligibility requirements of Section 65915, including, but not limited to, affordability requirements, shall be eligible for three additional concessions pursuant to Section 65915.

(2) For a residential development further than one-quarter mile but within one-half mile of a Tier 1 transit-oriented development stop, all of the following apply:

(A) A development may be built up to 65 feet high, or up to the local height limit, whichever is greater.

(B) A local government shall not impose any maximum density standard of less than 100 dwelling units per acre. The development proponent may seek a further increased density in accordance with applicable density bonus law.

(C) A local government shall not enforce any other local development standard or combination of standards that would prevent achieving a residential floor area ratio of up to 3.

(D) A development that otherwise meets the eligibility requirements of Section 65915, including, but not limited to, affordability requirements, shall be eligible for two additional concessions pursuant to Section 65915.

(3) For a residential development within one-quarter mile of a Tier 2 transit-oriented development stop, all of the following apply:

(A) A development may be built up to 65 feet high, or up to the local height limit, whichever is greater.

(B) A local government shall not impose any maximum density standard of less than 100 dwelling units per acre. The development proponent may seek a further increased density in accordance with applicable density bonus law.

(C) A local government shall not enforce any other local development standard or combination of standards that would prevent achieving a residential floor area ratio of up to 3.

(D) A development that otherwise meets the eligibility requirements of Section 65915, including, but not limited to,

affordability requirements, shall be eligible for two additional concessions pursuant to Section 65915.

(4) For a residential development further than one-quarter mile but within one-half mile of a Tier 2 transit-oriented development stop, all of the following apply:

(A) A development may be built up to 55 feet high, or up to the local height limit, whichever is greater.

(B) A local government shall not impose any maximum density standard of less than 80 dwelling units per acre. The development proponent may seek a further increased density in accordance with applicable density bonus law.

(C) A local government shall not enforce any other local development standard or combination of standards that would prevent achieving a residential floor area ratio of up to 2.5.

(D) A development that otherwise meets the eligibility requirements of Section 65915, including, but not limited to, affordability requirements, shall be eligible for one additional concession pursuant to Section 65915.

(5) For a residential development within one-quarter mile of a Tier 3 transit-oriented development stop, all of the following apply:

(A) A development may be built up to 55 feet high, or up to the local height limit, whichever is greater.

(B) A local government shall not impose any maximum density standard of less than 80 dwelling units per acre. The development proponent may seek a further increased density in accordance with applicable density bonus law.

(C) A local government shall not enforce any other local development standard or combination of standards that would prevent achieving a residential floor area ratio of up to 2.5.

(D) A development that otherwise meets the eligibility requirements of Section 65915, including, but not limited to, affordability requirements, shall be eligible for one additional concession pursuant to Section 65915.

(6) For a residential development further than one-quarter mile but within one-half mile of a Tier 3 transit-oriented development ~~stop within an urban transit county,~~ *stop,* all of the following apply:

(A) A development *within an urban transit county* may be built up to 45 feet high, or up to the local height limit, whichever is greater. *A development not within an urban transit county may be built up to the local height limit.*

(B) A local government shall not impose any maximum density standard of less than 60 dwelling units per acre. The development proponent may seek a further increased density in accordance with applicable density bonus law.

(C) A local government shall not enforce any other local development standard or combination of standards that would prevent achieving a residential floor area ratio of up to 2.

(b) A local government may still enact and enforce standards, including an inclusionary zoning requirement that applies generally within the jurisdiction, that do not, alone or in concert, prevent achieving the applicable development standards of subdivision (a).

(c) If a development proposes a height under this section in excess of the local height limit, then a local government shall not be required to grant a waiver, incentive, or concession pursuant to Section 65915 for additional height beyond that specified in this section, except as provided in subparagraph (D) of paragraph (2) of subdivision (d) of Section 65915.

(d) Notwithstanding any other law, a housing development project that meets any of the eligibility criteria under subdivision (a) and is immediately adjacent to a Tier 1, Tier 2, or Tier 3 transit-oriented development stop shall be eligible for an adjacency intensifier to increase the height limit by an additional 20 feet, the maximum density standard by an additional 40 dwelling units per acre, and the residential floor area ratio by 1.

(e) A development proposed pursuant to this section shall comply with the antidisplacement requirements of Section 66300.6. This subdivision shall apply to any city or county.

(f) A development proposed pursuant to this section shall include housing for lower income households in one of the following ways:

(1) If there is a local inclusionary zoning ordinance or affordable housing fee, it shall comply with the requirements of that ordinance or fee.

(2) (A) If there is no local inclusionary ordinance or affordable housing fee, a development of more than 10 units shall meet the requirements to qualify for a density bonus pursuant to subdivision (b) of Section 65915 or a local ordinance.

(B) This paragraph shall not apply to any development of 10 units or less.

(g) For purposes of subdivision (j) of Section 65589.5, a proposed housing development project that is consistent with the applicable standards from this chapter shall be deemed consistent, compliant, and in conformity with an applicable plan, program, policy, ordinance, standard, requirement, or other similar provision. This subdivision shall not require a ministerial approval process or modify the requirements of Division 13 (commencing with Section 21000) of the Public Resources Code.

(h) A local government that denies a housing development project meeting the requirements of this section that is located in a high-resource area shall be presumed to be in violation of the Housing Accountability Act (Section 65589.5) and immediately liable for penalties pursuant to subparagraph (B) of paragraph (1) of subdivision (k) of Section 65589.5, unless the local government demonstrates, pursuant to the standards in subdivisions (j) and (o) of Section 65589.5, that it has a health, life, or safety reason for denying the project.

65912.158. (a) Notwithstanding any other provision of this chapter, a transit agency may adopt objective standards for both residential and commercial developments proposed to be constructed on land owned by the transit agency or on which the transit agency has a permanent operating easement, if the land is within one-half mile of a transit-oriented development stop and the objective standards allow for the same or greater development intensity as that allowed by local standards or applicable state law.

(b) The board of a transit agency may vote to designate a major transit stop served by the agency as a Tier 3 transit-oriented development stop for the purposes of this section.

65912.159. (a) A housing development project proposed pursuant to Section 65912.157 shall be eligible for streamlined ministerial approval pursuant to Section 65913.4 in accordance with all of the following:

(1) The proposed project shall be exempt from subparagraph (A) of paragraph (4) of, paragraph (5) of, and clause (iv) of subparagraph (A) of paragraph (6) of, subdivision (a) of Section 65913.4.

(2) The proposed project shall comply with the affordability requirements in subclauses (I) to (III), inclusive, of clause (i) of subparagraph (B) of paragraph (4) of subdivision (a) of Section 65913.4.

(3) The proposed project shall comply with all other requirements of Section 65913.4, including, but not limited to, the prohibition against a site that is within a very high fire hazard severity zone, pursuant to subparagraph (D) of paragraph (6) of subdivision (a) of Section 65913.4.

(b) Any housing development proposed pursuant to Section 65912.157 not seeking streamlined approval under Section 65913.4 shall be reviewed according to the jurisdiction's development review process and Section 65589.5, except that any local zoning standard conflicting with the requirements of this chapter shall not apply.

65912.160. (a) The department shall oversee compliance with this chapter, including, but not limited to, promulgating standards on how to account for capacity pursuant to this chapter in a city or county's inventory of land suitable for residential development, pursuant to Section 65583.2.

(b) The regional council of governments or metropolitan planning organization may create a map of transit-oriented development stops and zones designated under this chapter. This map shall have a rebuttable presumption of validity for use by project applicants and local governments.

(c) (1) A local government may enact an ordinance to make its zoning code consistent with the provisions of this chapter, subject to review by the department pursuant to paragraph (3).

(2) The ordinance described in paragraph (1) shall not be considered a project under Division 13 (commencing with Section 21000) of the Public Resources Code.

(3) (A) A local government shall submit a copy of any ordinance enacted pursuant to this section to the department within 60 days of enactment.

(B) Upon receipt of an ordinance pursuant to this paragraph, the department shall review that ordinance and determine whether it complies with this section. If the department determines that the ordinance does not comply with this section, the department shall notify the local government in writing and provide the local government a reasonable time, not to exceed 30 days, to respond before taking further action as authorized by this section.

(C) The local government shall consider any findings made by the department pursuant to subparagraph (B) and shall do one of the following:

(i) Amend the ordinance to comply with this section.

(ii) Enact the ordinance without changes. The local government shall include findings in its resolution adopting the ordinance that explain the reasons the local government believes that the ordinance complies with this section despite the findings of the department.

(D) If the local government does not amend its ordinance in response to the department's findings or does not adopt a resolution with findings explaining the reason the ordinance complies with this section and addressing the department's findings, the department shall notify the local government and may notify the Attorney General that the local government is in violation of this section.

65912.161. (a) A local government may enact a local transit-oriented development alternative plan as an amendment to the housing element and land use element of its general plan, subject to review by the department.

(1) (A) A local transit-oriented development alternative plan shall maintain at least the same total increase in feasible zoned capacity, in terms of both total units and residential floor area, as provided for in this chapter across all transit-oriented development zones within the jurisdiction.

(i) The plan shall not reduce the capacity in any station area, in total units or residential floor area, by more than 50 percent.

(ii) The plan shall not reduce the allowed density for any individual site allowing residential use by more than 50 percent below that permitted under this chapter.

(iii) A site's maximum feasible capacity counted toward the plan shall be not more than 200 percent of the maximum density established under this chapter.

(B) For the purposes of this paragraph, both of the following definitions apply:

(i) "Feasible" means capable of being accomplished in a successful manner within a reasonable period of time, taking into account economic, environmental, social, and technological factors.

(ii) "Transit-oriented development zone" means the eligible area around a qualifying transit-oriented development stop.

(2) A local transit-oriented development alternative plan may designate any other major transit stop or stop along a high-quality transit corridor that is not already identified as a transit-oriented

development stop as a Tier 3 transit-oriented development stop. A local transit-oriented development plan consisting solely of adding additional major transit stops as transit-oriented development stops shall be exempt from the requirements of paragraph (4).

(3) A local transit-oriented development alternative plan may consist of an existing local transit-oriented zoning ordinance, overlay zone, specific plan, or zoning incentive ordinance, provided that it applies to all residential properties within the transit-oriented development area and provides at least the same total feasible capacity for units and floor area as Section 65912.157.

(4) Prior to enacting a local transit-oriented development alternative plan, the local government shall submit the draft plan to the department for review. The submission shall include any amendments to the local zoning ordinances, any applicable objective design standards that would apply to transit-oriented developments, and assessments of the plan's impact on development feasibility and fair housing. The department shall assess whether the plan maintains at least an equal feasible developable housing capacity as the baseline established under this section as well as the plan's effects on fair housing relative to the baseline established under this section, and shall recommend changes to remove unnecessary constraints on housing from the plan.

(b) Section 65912.157 shall not apply within a jurisdiction that has a local transit-oriented alternative plan that has been approved by the department as satisfying the requirements of this section in effect. The department's approval pursuant to this subdivision shall be valid through the jurisdiction's next amendment to the housing element of its general plan.

65912.162. The Legislature finds and declares that the state faces a housing crisis of availability and affordability, in large part due to a severe shortage of housing, and solving the housing crisis therefore requires a multifaceted, statewide approach, including, but not limited to, encouraging an increase in the overall supply of housing, encouraging the development of housing that is affordable to households at all income levels, removing barriers to housing production, expanding homeownership opportunities, and expanding the availability of rental housing, and is a matter of statewide concern and is not a municipal affair as that term is

used in Section 5 of Article XI of the California Constitution. Therefore, this chapter applies to all cities, including charter cities.

SEC. 2. Section 21080.26.5 is added to the Public Resources Code, to read:

21080.26.5. (a) For the purposes of this section, "public project" means a project constructed by either a public agency or private entity, that, upon the completion of the construction, will be operated by a public agency.

(b) This division shall not apply to a public or private residential, commercial, or mixed-use project that, at the time the project application is filed, is located entirely or principally on land owned by a public transit agency, or fully or partially encumbered by an existing operating easement in favor of a public transit agency, and that includes at least one of the following:

(1) A project component identified in paragraphs (1) to (5), inclusive, or paragraph (7) of subdivision (b) of Section 21080.25.

(2) A public project for passenger rail service facilities, other than light rail service eligible under paragraph (5) of subdivision (b) of Section 21080.25, including the construction, reconfiguration, or rehabilitation of stations, terminals, rails, platforms, or existing operations facilities, which will be exclusively used by zero-emission or electric trains. The project shall be located on land owned by a public transit agency, or land fully or partially encumbered by an existing operating easement in favor of a public transit agency, at the time the project application is filed.

(3) An agreement between the project applicant and public transit agency that owns the land or has the permanent operating easement to finance transit capital infrastructure, transit maintenance, or transit operations, including through a proposed public financing district, community financing district, or tax increment generated by the project.

(c) If the project described in paragraph (1) of subdivision (b) is located on land fully or partially encumbered by an existing operating easement in favor of a public transit agency at the time the project application is filed, the transit agency, the grantor of the easement, and all fee owners of the property encumbered by the easement must sponsor or consent to the application. Nothing in this section shall be interpreted to authorize a transit agency to construct a project described in paragraph (1) of subdivision (b)

unless permitted by its operating easement or unless the easement is terminated, in each case prior to the commencement of construction.

(d) If a project described in subdivision (b) requires the construction of new passenger rail storage and maintenance facilities at a publicly or privately owned offsite location distinct from the principal project site, then that project shall be considered a wholly separate project from the project described in subdivision (b) and shall not be exempt from this division. Any required environmental review shall not affect or render invalid the exemption provided in subdivision (b), regardless of whether the project described in subdivision (b) cannot proceed unless the offsite facilities are constructed.

SEC. 3. The provisions of this act are severable. If any provision of this act or its application is held invalid, that invalidity shall not affect other provisions or applications that can be given effect without the invalid provision or application.

SEC. 4. No reimbursement is required by this act pursuant to Section 6 of Article XIII B of the California Constitution because a local government or school district has the authority to levy service charges, fees, or assessments sufficient to pay for the program or level of service mandated by this act, within the meaning of Section 17556 of the Government Code.

O

City Council Agenda Report

ITEM NO. 14

DATE: June 18, 2025

FROM: Todd Hileman, City Manager

PREPARED BY: Roxanne Diaz, City Attorney

SUBJECT: **CONSIDERATION OF AN ORDINANCE OF THE CITY COUNCIL OF THE CITY OF SOUTH PASADENA, CALIFORNIA, AMENDING ARTICLE 7 (DEFINITIONS) OF CHAPTER 36 (ZONING) OF THE SOUTH PASADENA MUNICIPAL CODE TO AMEND THE DEFINITION OF "CITY ENGINEER"**

Recommendation

It is recommended that the City Council introduce the ordinance by title only and waive full reading of the ordinance amending Article 7 (Definitions) of Chapter 36 (Zoning) of the South Pasadena Municipal Code.

Background

The South Pasadena Municipal Code defines the City Engineer as the Public Works Director. There is however no statutory requirement that requires the Public Works Director to be a current licensed engineer. The proposed amendment will revise the definition to define the City Engineer as the person designated by the City to fill that role and allow the City Manager flexibility in the recruitment for a new Public Works Director.

Analysis

California's Business and Professions Code provides that each city shall have at least one licensed engineer that is designated as the person responsible for professional engineer work for each branch of professional engineering practiced in any department of the city. Generally, this person is designed as the City Engineer, however, that person does not need to be the Public Works Director. Cities comply with this requirement in a variety of ways -- namely by designating a public works staff member as the City Engineer or having contract engineering firms take that role when doing work for the City. Revising this definition will allow the City, through the City Manager, to assign the role of City Engineer to one of the professional engineers on staff as appropriate. The proposed ordinance states that the City Engineer is the "person designated by the City as the City Engineer for the City." The proposed revision of this definition aligns with the current recruitment for a Public Works Director which does not require that a candidate be registered with the state as a professional engineer, although it is highly desirable.

Fiscal Impact

There is no fiscal impact in adopting this ordinance.

Attachment:
Attachment No. 1 - Ordinance Updating the Definition of City Engineer

ORDINANCE NO. ____

AN ORDINANCE OF THE CITY COUNCIL OF THE CITY OF SOUTH PASADENA, CALIFORNIA, AMENDING ARTICLE 7 (DEFINITIONS) OF CHAPTER 36 (ZONING) OF THE SOUTH PASADENA MUNICIPAL CODE TO AMEND THE DEFINITION OF "CITY ENGINEER"

THE CITY COUNCIL OF THE CITY OF SOUTH PASADENA DOES ORDAIN AS FOLLOWS:

SECTION 1. Section 36.700.020(C) of Article 7 (Definitions) of Chapter 36 (Zoning) of the South Pasadena Municipal Code is hereby amended to read as follows:

"City Engineer". The person designated by the City as the City Engineer for the City."

SECTION 2. The City Clerk shall certify to the passage of this Ordinance and shall cause the same to be published in the manner prescribed by law, and this Ordinance shall become effective 30 days following its adoption.

PASSED, APPROVED AND ADOPTED on this 16th day of July, 2025.

AYES:

NOES:

ABSENT:

ABSTAIN:

_____
Janet Braun, Mayor

ATTEST:

_____
Hector Gomez, Chief City Clerk

APPROVED AS TO FORM:

_____
Roxanne Diaz, City Attorney

City Council Agenda Report

ITEM NO. 15

DATE: June 18, 2025

FROM: Todd Hileman, City Manager

PREPARED BY: William Castrillon, Budget and Purchasing Manager
Alma Medina, Assistant to the City Manager

SUBJECT: **CONSIDERATION OF APPROVAL OF AN AMENDMENT TO THE PROFESSIONAL SERVICES AGREEMENT WITH ROBERT HALF INTERNATIONAL INC., FOR MUNICIPAL STAFFING SERVICES IN AN AMOUNT NOT-TO-EXCEED $57,000 FOR A NEW TOTAL-NOT-TO-EXCEED AMOUNT OF $168,000 AND TO EXTEND THE AGREEMENT THROUGH DECEMBER 31, 2025**

Recommendation

It is recommended that the City Council consider approval of an Amendment to the Professional Services Agreement with Robert Half International, Inc., to extend the agreement through December 31, 2025, and increase the compensation in the amount of $57,000 and for a new total not -to-exceed amount of $168,000.

Executive Summary

The City has been utilizing the municipal staffing services from Robert Half International Inc., (Robert Half), to temporarily assist the Finance Department due to staff vacancies. Due to the continued turnover of key staff, the department needs assistance with the preparation, processing, and maintenance of financial records, and the review of purchase requests and contracts. The current agreement with Robert Half expires on June 30, 2025. Staff recommends approval of the proposed Amendment to the agreement, in the amount of $57,000 and to extend the agreement through December 31, 2025 to continue providing services to the City.

Background

City Council approval is requested to amend the Professional Services Agreement (PSA) with Robert Half International Inc. (Robert Half) to continue temporary municipal staffing services to the Finance Department. In October 2024, the PSA with Robert Half was executed, to provide municipal staffing services for the Finance Department and was subsequently amended in December 2024 to increase the contract amount. The need for temporary municipal staffing services by Robert Half is critical in support of the backlog of work and high workload within the Department, as it has experienced a mass turnover of key staff. The City's Human Resources Division is actively working to fill vacant positions and address employee turnover.

Since the agreement was approved by City Manager, the use of Robert Half has proven indispensable to the Department, as it provides day-to-day support for purchasing and journal entries. The approval of the proposed amendment will allow the City to continue receiving temporary staffing services for the Finance Department.

Analysis

The initial Robert Half agreement for municipal staffing services has a duration from October 2, 2024, through June 30, 2025, for a maximum amount of $30,000. On December 4, 2024, the City Council approved an amendment to the agreement, in the amount of $81,000, for a new total contract amount of $111,000. Due to the current vacancies in the Finance Department, the required accounts payable needs, and the preparation and processing of financial records, a second amendment to the PSA is recommended. The proposed amendment would increase the contract amount by $57,000, for a new total contract amount of $168,000. Staff recommends the approval of this amendment to continue the operations within the Finance Department as staff is being recruited and onboarded.

Fiscal Impact

The proposed amendment, if approved, will increase the contract amount by $57,000, for a total contract not to exceed $168,000. At this time, no appropriation is required. The amount of $57,000 will be funded from salary savings from the Finance Department's vacant positions.

Attachment:

Attachment No. 1 - Proposed Amendment

Attachment No. 2 - First Amendment

Attachment No. 3 - PSA Robert Half International Inc.

AMENDMENT TO PROFESSIONAL SERVICES AGREEMENT FOR TEMPORARY STAFFING SERVICES

THIS AMENDMENT ("Amendment") is made on this 18th day of June 2025, by and between the CITY OF SOUTH PASADENA ("CITY") and ROBERT HALF INTERNATIONAL INC. ("CONSULTANT').

RECITALS

WHEREAS, on October 2, 2024, the CITY and CONSULTANT entered into an Agreement for PROFESSIONAL SERVICES ("Agreement") for CONSULTANT to perform MUNICIPAL PROFESSIONAL STAFFING services for the City; and

WHEREAS, the original Agreement was in the amount of $30,000, for the Scope of Services; and

WHEREAS, on December 4, 2024, the CITY executed an Amendment to increase the total contract in an amount not to exceed $81,000, for a new aggregate total of Agreement and Amendment sum total of $111,000; and

WHEREAS, the CITY desires to execute an Amendment to increase the total contract in an amount not to exceed $57,000, for a new aggregate total of Agreement and Amendment sum total of $168,000, and extend the agreement term through December 31, 2025; and

NOW THEREFORE, THE CITY AND THE CONSULTANT AGREE AS FOLLOWS:

1. That Section 3.4 "Maximum Amount" of the Agreement is hereby amended to read as follows:
   "Maximum Amount": The highest total compensation and cost payable to CONSULTANT by CITY under this agreement. The Maximum Amount under this Agreement is One Hundred and Sixty-Eight Dollars ($168.000).

2. That Section 3.6 "Termination Date" of the Agreement is hereby amended to read as follows:
   "Termination Date": December 31, 2025

3. All other terms, conditions, and provisions of the Agreement to the extent not modified by this Amendment, shall remain in full force and effect.

"City" City of South Pasadena	"Consultant" Robert Half International Inc.
By:_____ *Signature*	By:_____ *Signature*
Printed: Todd Hileman	Printed: Chriz Garza
Title: City Manager	Title: Senior Vice President
Date:_____	Date:_____

Attest:

By:_____
Hector Gomez, Chief City Clerk

Date:_____

Approved as to form:

By:_____
Roxanne M. Diaz, City Attorney

Date:_____

Docusign Envelope ID: EAB61341-7B13-45CB-A3F7-539FB93F3058

AMENDMENT TO THE PROFESSIONAL SERVICES AGREEMENT FOR MUNICIPAL PROFESSIONAL STAFFING SERVICES

THIS AMENDMENT ("Amendment") is made on this 4th day of December 2024, by and between the CITY OF SOUTH PASADENA ("CITY") and ROBERT HALF INTERNATIONAL INC. ("CONSULTANT').

RECITALS

WHEREAS, on October 2, 2024, the CITY and CONSULTANT entered into an Agreement for PROFESSIONAL SERVICES ("Agreement") for CONSULTANT to perform MUNICIPAL PROFESSIONAL STAFFING services for the City; and

WHEREAS, the original Agreement was in the amount of $30,000 for the Scope of Services; and

WHEREAS, the CITY desires to execute an Amendment to increase the contract in the amount not to exceed $81,000, bringing the aggregate total of the Agreement and Amendment to a sumtotal of $111,000.

NOW THEREFORE, THE CITY AND THE CONSULTANT AGREE AS FOLLOWS:

1. That Section 3.4 "Maximum Amount" of the Agreement is hereby amended to read as follows:
   "Maximum Amount": The highest total compensation and cost payable to CONSULTANT by CITY under this agreement. The Maximum Amount under this Agreement is One Hundred Eleven Thousand Dollars ($111,000).

2. All other terms, conditions, and provisions of the Agreement to the extent not modified by this Amendment, shall remain in full force and effect.

Docusign Envelope ID: EAB61341-7B13-45CB-A3F7-539FB93F3058

"City"
City of South Pasadena

By: Signed by: Donald E. Penman
C9C235A36ABD40C...

Signature

Printed: Donald Penman

Title: Interim City Manager

Date: 12/10/2024

"Consultant"
Robert Half International Inc.

By: DocuSigned by: Chris Garza
1B463DB073F0412...

Signature

Printed: Chris Garza

Title: Senior Vice President

Date: 12/9/2024

Attest:

By: DocuSigned by: Mark Perez
8C28A8A8EFB14A7...
Mark Perez , Deputy City Clerk

Date: 12/10/2024

Approved as to form:

By: DocuSigned by: Roxanne Diaz
A7888E5CA8A241F...
Roxanne M. Diaz, City Attorney

Date: 12/9/2024

Docusign Envelope ID: D4C55326-6A06-463D-B30A-0614AC2616CE

PROFESSIONAL SERVICES AGREEMENT FOR CONSULTANT SERVICES

(City of South Pasadena /Robert Half Inc.)

1. IDENTIFICATION

This PROFESSIONAL SERVICES AGREEMENT ("Agreement") is entered into by and between the City of South Pasadena, a California municipal corporation ("City"), and Robert Half Inc. ("Consultant").

2. RECITALS

2.1. City has determined that it requires the following professional services from a consultant: Municipal Professional Staffing.

2.2. Consultant represents that it is fully qualified to perform such professional services by virtue of its experience and the training, education and expertise of its principals and employees. Consultant further represents that it is willing to accept responsibility for performing such services in accordance with the terms and conditions set forth in this Agreement.

2.3. Consultant represents that it has no known relationships with third parties, City Council members, or employees of City which would (1) present a conflict of interest with the rendering of services under this Agreement under Government Code Section 1090, the Political Reform Act (Government Code Section 81000 *et seq.*), or other applicable law, (2) prevent Consultant from performing the terms of this Agreement, or (3) present a significant opportunity for the disclosure of confidential information.

NOW, THEREFORE, for and in consideration of the mutual covenants and conditions herein contained, City and Consultant agree as follows:

3. DEFINITIONS

3.1. "Scope of Services": Temporary Staffing Services, as indicated in Exhibit A.

3.2. "Agreement Administrator": The Agreement Administrator for this project is Tina Lopez, Human Resources & Risk Manager. The Agreement Administrator shall be the principal point of contact at the City for this project. All services under this Agreement shall be performed at the request of the Agreement Administrator. The Agreement Administrator will establish the timetable for completion of services and any interim milestones. City reserves the right to change this designation upon written notice to Consultant

3.3. "Approved Fee Schedule": Consultant's compensation rates are set forth in the fee schedule attached hereto as Exhibit A and incorporated herein by this reference. This

Docusign Envelope ID: D4C55326-6A06-463D-B30A-0614AC2616CE

fee schedule shall remain in effect for the duration of this Agreement unless modified in writing by mutual agreement of the parties.

3.4. "Maximum Amount": The highest total compensation and costs payable to Consultant by City under this Agreement. The Maximum Amount under this Agreement is Thirty-Thousand Dollars ($30,000). Notwithstanding anything to the contrary in this Agreement, Consultant may at any time, in its sole discretion, discontinue performance of the services once the Maximum Amount has been attained (even if Consultant continued to provide services after the Maximum Amount was reached).

3.5. "Commencement Date": Upon execution of this agreement.

3.6. "Termination Date": June 30, 2025

4. TERM

The term of this Agreement shall commence at 12:00 a.m. on the Commencement Date and shall expire at 11:59 p.m. on the Termination Date unless extended by written agreement of the parties or terminated earlier under Section 18 ("Termination") below. Consultant and City may extend the time to perform the services required hereunder via amendment exe authorized in advance by City in writing and incorporated in written amendments to this Agreement executed by Consultant and City.

5. CONSULTANT'S DUTIES

5.1. **Services**. Consultant shall perform the services identified in the Scope of Services. City shall have the right to request, in writing, changes in the Scope of Services. Any such changes mutually agreed upon by the parties, and any corresponding increase or decrease in compensation, shall be incorporated by written amendment to this Agreement.

5.2. **Coordination with City**. In performing services under this Agreement, Consultant shall coordinate all contact with City through its Agreement Administrator.

5.3. **Budgetary Notification**. Consultant shall notify the Agreement Administrator, in writing, when fees and expenses incurred under this Agreement have reached eighty percent (80%) of the Maximum Amount. Consultant shall concurrently inform the Agreement Administrator, in writing, of Consultant's estimate of total expenditures required to complete its current assignments before proceeding, when the remaining work on such assignments would exceed the Maximum Amount.

5.4. **Business License.** Consultant shall obtain and maintain in force a City business license for the duration of this Agreement.

5.5. **Professional Standards.** Consultant shall perform all work to the standards of Consultant's profession and in a manner reasonably satisfactory to City. Consultant

Docusign Envelope ID: D4C55326-6A06-463D-B30A-0614AC2616CE

shall keep itself fully informed of and in compliance with all local, state, and federal laws, rules, and regulations in any manner affecting the performance of this Agreement, including all Cal/OSHA requirements, the conflict of interest provisions of Government Code § 1090 and the Political Reform Act (Government Code § 81000 et seq.).

5.6. **Avoid Conflicts.** During the term of this Agreement, Consultant shall not perform any work for another person or entity for whom Consultant was not working at the Commencement Date if such work would present a conflict interfering with performance under this Agreement. However, City may consent in writing to Consultant's performance of such work.

5.7. **Appropriate Personnel.** Consultant has, or will secure at its own expense, all personnel required to perform the services identified in the Scope of Services. All such services shall be performed by Consultant, and all personnel engaged in the work shall be qualified to perform such services. Chris Graza, Senior Regional Director of Robert Half Inc., shall be Consultant's project administrator and shall have direct responsibility for management of Consultant's performance under this Agreement. No change shall be made in Consultant's project administrator without City's prior written consent.

5.8. **Substitution of Personnel.** Any persons named in the proposal or Scope of Services constitutes a promise to the City that those persons will perform and coordinate their respective services under this Agreement. Should one or more of such personnel become unavailable, Consultant may substitute other personnel of at least equal competence upon written approval of City. If City and Consultant cannot agree as to the substitution of key personnel, City may terminate this Agreement for cause.

5.9. **Permits and Approvals.** Consultant shall obtain, at its sole cost and expense, all permits and regulatory approvals necessary for Consultant's performance of this Agreement. This includes, but shall not be limited to, professional licenses, encroachment permits and building and safety permits and inspections.

5.10. **Notification of Organizational Changes.** Consultant shall notify the Agreement Administrator, in writing, of any change in name, ownership or control of Consultant's firm or of any subcontractor. Change of ownership or control of Consultant's firm may require an amendment to this Agreement.

5.11. **Records.** Consultant shall maintain any and all ledgers, books of account, invoices, vouchers, canceled checks, and other records or documents evidencing or relating to charges for services or expenditures and disbursements charged to City under this Agreement for a minimum of three (3) years, or for any longer period required by law, from the date of final payment to Consultant under this Agreement. All such documents shall be made available for inspection, audit, and/or copying at any time during regular business hours, upon oral or written request of City. In addition, pursuant to Government Code Section 8546.7, if the amount of public funds expended under this

Docusign Envelope ID: D4C55326-6A06-463D-B30A-0614AC2616CE

Agreement exceeds ten thousand dollars, all such documents and this Agreement shall be subject to the examination and audit of the State Auditor, at the request of City or as part of any audit of City, for a period of three (3) years after final payment under this Agreement. This audit provision shall not apply to confidential information, including but not limited to, Consultant's Assigned Individual's personnel files or the remuneration paid by Consultant to its Assigned Individuals and subcontractors.

6. SUBCONTRACTING

6.1. **General Prohibition.** This Agreement covers professional services of a specific and unique nature. Except as otherwise provided herein, Consultant shall not assign or transfer its interest in this Agreement or subcontract any services to be performed without amending this Agreement.

6.2. **Consultant Responsible.** Consultant shall be responsible to City for all services to be performed under this Agreement.

6.3. **Reserved.**

6.4. **Compensation for Subcontractors.** Consultant shall be liable and accountable for any and all payments, compensation, and federal and state taxes to all subcontractors performing services under this Agreement. City shall not be liable for any payment, compensation, or federal and state taxes for any subcontractors.

7. COMPENSATION

7.1. **General.** City agrees to compensate Consultant for the services provided under this Agreement, and Consultant agrees to accept payment in accordance with the Fee Schedule set forth in Exhibit B as full satisfaction for such services. Compensation shall not exceed the Maximum Amount. Consultant shall not be reimbursed for any expenses unless provided for in this Agreement or authorized in writing by City in advance.

7.2. **Invoices.** Consultant shall submit to City an invoice, on a monthly basis or as otherwise agreed to by the Agreement Administrator, for services performed pursuant to this Agreement. Each invoice shall identify the Maximum Amount, the services rendered during the billing period, the amount due for the invoice, and the total amount previously invoiced. All labor charges shall be itemized by employee name and classification/position with the firm, the corresponding hourly rate, the hours worked, a description of each labor charge, and the total amount due for labor charges.

7.3. **Taxes.** City shall not withhold applicable taxes or other payroll deductions from payments made to Consultant except as otherwise required by law. Consultant shall be solely responsible for calculating, withholding, and paying all taxes.

Docusign Envelope ID: D4C55326-6A06-463D-B30A-0614AC2616CE

7.4. **Disputes.** The parties agree to meet and confer at mutually agreeable times to resolve any disputed amounts contained in an invoice submitted by Consultant.

7.5. **Additional Work.** Consultant shall not be reimbursed for any expenses incurred for work performed outside the Scope of Services unless prior written approval is given by the City through a fully executed written amendment. Consultant shall not undertake any such work without prior written approval of the City.

7.6. **City Satisfaction as Precondition to Payment.** Notwithstanding any other terms of this Agreement, no payments shall be made to Consultant until City is satisfied that the services are satisfactory.

7.7. **Right to Withhold Payments.** If Consultant fails to provide a deposit or promptly satisfy an indemnity obligation described in Section 11, City shall have the right to withhold payments under this Agreement to offset that amount.

8. PREVAILING WAGES

Consultant is aware of the requirements of California Labor Code Section 1720, et seq., and 1770, et seq., as well as California Code of Regulations, Title 8, Section 16000, et seq., ("Prevailing Wage Laws"), which require the payment of prevailing wage rates and the performance of other requirements on certain "public works" and "maintenance" projects. Consultant shall defend, indemnify, and hold the City, tis elected officials, officers, employees, and agents free and harmless form any claim or liability arising out of any failure or alleged failure of Consultant to comply with the Prevailing Wage Laws.

9. OWNERSHIP OF WRITTEN PRODUCTS

All reports, documents or other written material ("written products" herein) developed by the Assigned Individuals for City in the performance of this Agreement shall be and remain the property of City without restriction or limitation upon its use or dissemination by City except as provided by law. Consultant may take and retain copies of such written products as desired, but no such written products shall be the subject of a copyright application by Consultant.

10. RELATIONSHIP OF PARTIES

10.1. **General.** Consultant is, and shall at all times remain as to City, a wholly independent contractor.

10.2. **No Agent Authority.** Consultant shall have no power to incur any debt, obligation, or liability on behalf of City or otherwise to act on behalf of City as an agent. Neither City nor any of its agents shall have control over the conduct of Consultant or any of Consultant's employees, except as set forth in this Agreement. Consultant shall not

Docusign Envelope ID: D4C55326-6A06-463D-B30A-0614AC2616CE

represent that it is, or that any of its agents or employees are, in any manner employees of City.

10.3. **Independent Contractor Status.** Under no circumstances shall Consultant or its employees look to the City as an employer. Consultant shall not be entitled to any benefits. City makes no representation as to the effect of this independent contractor relationship on Consultant's previously earned California Public Employees Retirement System ("CalPERS") retirement benefits, if any, and Consultant specifically assumes the responsibility for making such a determination. Consultant shall be responsible for all reports and obligations including, but not limited to: social security taxes, income tax withholding, unemployment insurance, disability insurance, and workers' compensation, and other applicable federal and state taxes.

10.4. **Indemnification of CalPERS Determination.** In the event that Consultant or any employee, agent, or subcontractor of Consultant providing services under this Agreement claims or is determined by a court of competent jurisdiction or CalPERS to be eligible for enrollment in CalPERS as an employee of the City, Consultant shall indemnify, defend, and hold harmless City for the payment of any employee and/or employer contributions for CalPERS benefits on behalf of Consultant or its employees, agents, or subcontractors, as well as for the payment of any penalties and interest on such contributions, which would otherwise be the responsibility of City.

11. INDEMNIFICATION

11.1 **Definitions.** For purposes of this Section 11, "Consultant" shall include Consultant, its officers, employees, servants, agents, or subcontractors, or anyone directly or indirectly employed by either Consultant or its subcontractors, in the performance of this Agreement. "City" shall include City, its officers, agents, employees and volunteers.

11.2 **Consultant to Indemnify City.** To the fullest extent permitted by law, Consultant shall indemnify, hold harmless, and defend City from and against any and all claims, losses, costs or expenses for any personal injury or property damage arising out of or in connection with Consultant's alleged negligence, recklessness or willful misconduct or other wrongful acts, errors or omissions of Consultant or failure to comply with any provision in this Agreement. Notwithstanding anything to the contrary in this Agreement, Consultant shall not be liable for, or have any duty of defense or indemnification with respect to any acts or omissions of City.

11.3 **Scope of Indemnity.** Personal injury shall include injury or damage due to death or injury to any person, whether physical, emotional, consequential or otherwise, Property damage shall include injury to any personal or real property. Consultant shall not be required to indemnify City for such loss or damage as is caused by the sole active negligence or willful misconduct of the City.

11.4 **Attorneys Fees.** Such costs and expenses shall include reasonable attorneys' fees for counsel of City's choice, expert fees and all other costs and fees of litigation.

Docusign Envelope ID: D4C55326-6A06-463D-B30A-0614AC2616CE

Consultant shall not be entitled to any refund of attorneys' fees, defense costs or expenses in the event that it is adjudicated to have been non-negligent.

11.5 **Defense Deposit.** The City may request a deposit for defense costs from Consultant with respect to a claim. If the City requests a defense deposit, Consultant shall provide it within 15 days of the request.

11.6 **Waiver of Statutory Immunity.** The obligations of Consultant under this Section 11 are not limited by the provisions of any workers' compensation act or similar act. Consultant expressly waives its statutory immunity under such statutes or laws as to City.

11.7 **Indemnification by Subcontractors.** Consultant agrees to obtain executed indemnity agreements with provisions identical to those set forth here in this Section 11 from each and every subcontractor or any other non-employee or entity involved in the performance of this Agreement on Consultant's behalf.

11.8 **Insurance Not a Substitute.** City does not waive any indemnity rights by accepting any insurance policy or certificate required pursuant to this Agreement. Consultant's indemnification obligations apply regardless of whether or not any insurance policies are determined to be applicable to the claim, demand, damage, liability, loss, cost or expense.

12. INSURANCE

12.1. **Insurance Required.** Consultant shall maintain insurance as described in this section and shall require all of its subcontractors, consultants, and other agents to do the same. Approval of the insurance by the City shall not relieve or decrease any liability of Consultant Any requirement for insurance to be maintained after completion of the work shall survive this Agreement.

12.2. **Documentation of Insurance.** City will not execute this agreement until it has received a complete set of all required documentation of insurance coverage. However, failure to obtain the required documents prior to the work beginning shall not waive the Consultant's obligation to provide them. Consultant shall file with City:

- Certificate of Insurance, indicating companies acceptable to City, with a Best's Rating of no less than A-:VII showing. The Certificate of Insurance must include the following reference: Temporary Staffing Services
- Documentation of Best's rating acceptable to the City.
- Original endorsements effecting coverage for all policies required by this Agreement.

12.3. **Coverage Amounts.** Insurance coverage shall be at least in the following minimum amounts:

- Professional Liability Insurance: $2,000,000 per occurrence,

Docusign Envelope ID: D4C55326-6A06-463D-B30A-0614AC2616CE

$2,000,000 aggregate

- General Liability:
  - General Aggregate: $2,000,000
  - Products Comp/Op Aggregate $2,000,000
  - Personal & Advertising Injury $2,000,000
  - Each Occurrence $2,000,000
  - Fire Damage (any one fire) $ 100,000
  - Medical Expense (any 1 person) $ 10,000

- Workers' Compensation:
  - Workers' Compensation Statutory Limits
  - EL Each Accident $1,000,000
  - EL Disease - Policy Limit $1,000,000
  - EL Disease - Each Employee $1,000,000

- Automobile Liability
  - Any vehicle, combined single limit $1,000,000

Any available insurance proceeds broader than or in excess of the specified minimum insurance coverage requirements or limits shall be available to the additional insured. Furthermore, the requirements for coverage and limits shall be the greater of (1) the minimum coverage and limits specified in this Agreement, or (2) the broader coverage and maximum limits of coverage of any insurance policy or proceeds available to the named insured

12.4. **General Liability Insurance.** Commercial General Liability Insurance shall be no less broad than ISO form CG 00 01. Coverage must be on a standard Occurrence form. Claims-Made, modified, limited or restricted Occurrence forms are not acceptable.

12.5. **Worker's Compensation Insurance.** Consultant is aware of the provisions of Section 3700 of the Labor Code which requires every employer to carry Workers' Compensation (or to undertake equivalent self-insurance), and Consultant will comply with such provisions before commencing the performance of the work of this Agreement. If such insurance is underwritten by any agency other than the State Compensation Fund, such agency shall be a company authorized to do business in the State of California.

12.6. **Automobile Liability Insurance.** Covered vehicles shall include owned if any, non-owned, and hired automobiles and, trucks.

12.7. **Professional Liability Insurance or Errors & Omissions Coverage.** The deductible or self-insured retention may not exceed $50,000. If the insurance is on a Claims-Made basis, the retroactive date shall be no later than the commencement of the work. Coverage shall be continued for two years after the completion of the work by one of

Docusign Envelope ID: D4C55326-6A06-463D-B30A-0614AC2616CE

the following: (1) renewal of the existing policy; (2) an extended reporting period endorsement; or (3) replacement insurance with a retroactive date no later than the commencement of the work under this Agreement.

12.8. **Claims-Made Policies.** If any of the required policies provide coverage on a claims-made basis the Retroactive Date must be shown and must be before the date of the contract or the beginning of contract work. Claims-Made Insurance must be maintained and evidence of insurance must be provided for at least five (5) years after completion of the contract of work. If coverage is canceled or non-renewed, and not replaced with another claims-made policy form with a Retroactive Date prior to the contract effective date, the Consultant must purchase "extended reporting" coverage for a minimum of five (5) years after completion of contract work.

12.9. **Additional Insured Endorsements.** The City, its City Council, Commissions, officers, and employees of South Pasadena must be endorsed as an additional insured for each policy required herein, other than Professional Errors and Omissions and Worker's Compensation, for liability arising out of ongoing and completed operations by or on behalf of the Consultant. Consultant's insurance policies shall be primary as respects any claims related to or as the result of the Consultant's work. Any insurance, pooled coverage or self-insurance maintained by the City, its elected or appointed officials, directors, officers, agents, employees, volunteers, or consultants shall be non-contributory. All endorsements shall be signed by a person authorized by the insurer to bind coverage on its behalf. General liability coverage can be provided using an endorsement to the Consultant's insurance at least as broad as ISO Form CG 20 10 11 85 or both CG 20 10 and CG 20 37.

12.10. **Failure to Maintain Coverage.** In the event any policy is canceled prior to the completion of the project and the Consultant does not furnish a new certificate of insurance prior to cancellation, City has the right, but not the duty, to obtain the required insurance and deduct the premium(s) from any amounts due the Consultant under this Agreement. Failure of the Consultant to maintain the insurance required by this Agreement, or to comply with any of the requirements of this section, shall constitute a material breach of this Agreement.

12.11. **Notices.** Contractor shall provide immediate written notice if (1) any of the required insurance policies is terminated; (2) the limits of any of the required policies are reduced; (3) or the deductible or self-insured retention is increased. Consultant shall provide no less than 30 days' notice of any cancellation or material change to policies required by this Agreement. Consultant shall provide proof that cancelled or expired policies of insurance have been renewed or replaced with other policies providing at least the same coverage. Such proof will be furnished at least two weeks prior to the expiration of the coverages. The name and address for Additional Insured Endorsements, Certificates of Insurance and Notices of Cancellation is: City of South

Docusign Envelope ID: D4C55326-6A06-463D-B30A-0614AC2616CE

Pasadena, Attn: Tina Lopez, Human Resources & Risk Manager, South Pasadena, CA 91030.

12.12. **Consultant's Insurance Primary.** The insurance provided by Consultant, including all endorsements, shall be primary to any coverage available to City. Any insurance or self-insurance maintained by City and/or its officers, employees, agents or volunteers, shall be in excess of Consultant's insurance and shall not contribute with it.

12.13. **Waiver of Subrogation.** Consultant hereby waives all rights of subrogation against the City. Consultant shall additionally waive such rights either by endorsement to each policy or provide proof of such waiver in the policy itself.

12.14. **Report of Claims to City.** Consultant shall report to the City, in addition to the Consultant's insurer, any and all insurance claims submitted to Consultant's insurer in connection with the services under this Agreement.

12.15. **Premium Payments and Deductibles.** Consultant must disclose all deductibles and self-insured retention amounts to the City. The City may require the Consultant to provide proof of ability to pay losses and related investigations, claim administration, and defense expenses within retention amounts. Ultimately, City must approve all such amounts prior to execution of this Agreement.

City has no obligation to pay any premiums, assessments, or deductibles under any policy required in this Agreement. Consultant shall be responsible for all premiums and deductibles in all of Consultant's insurance policies. The amount of deductibles for insurance coverage required herein are subject to City's approval.

12.16. **Duty to Defend and Indemnify.** Consultant's duties to defend and indemnify City under this Agreement shall not be limited by the foregoing insurance requirements and shall survive the expiration of this Agreement.

13. MUTUAL COOPERATION

13.1. **City Cooperation in Performance.** City shall provide Consultant with all pertinent data, documents and other requested information as is reasonably available for the proper performance of Consultant's services under this Agreement.

13.2. **Consultant Cooperation in Defense of Claims.** If any claim or action is brought against City relating to Consultant's performance in connection with this Agreement, Consultant shall render any reasonable assistance that City may require in the defense of that claim or action.

14. NOTICES

Docusign Envelope ID: D4C55326-6A06-463D-B30A-0614AC2616CE

Any notices, bills, invoices, or reports required by this Agreement shall be deemed received on: (i) the day of delivery if delivered by hand, facsimile or overnight courier service during Consultant's and City's regular business hours; or (ii) on the third business day following deposit in the United States mail if delivered by mail, postage prepaid, to the addresses listed below (or to such other addresses as the parties may, from time to time, designate in writing).

If to City

Tina Lopez
City of South Pasadena
1414 Mission Street
South Pasadena, CA 91030
Telephone: (626) 403-7230

If to Consultant

Robert Half Inc.
Attn Chris Garza
790 E. Colorado Blvd
Suite 800 Pasadena, CA 91101
Telephone: (626) 463-2030
Facsimile: (626) 683-1217

With courtesy copy to:

Roxanne Diaz
South Pasadena City Attorney
Richards Watson and Gershon
350 South Grand Avenue
37th Floor Los Angeles CA 90071
Telephone: (213) 626-8484

With a copy to:

Robert Half Inc.
Attn Client Contracts Dept.
3001 Bishop Drive, Suite 140
San Ramon, CA 94583

15. SURVIVING COVENANTS

The parties agree that the covenants contained in paragraph 5.11 (Records), paragraph 10.4 (Indemnification of CalPERS Determination), Section 11 (Indemnity), paragraph 12.8 (Claims-Made Policies), paragraph 13.2 (Consultant Cooperation in Defense of Claims), and paragraph 18.1 (Confidentiality) of this Agreement shall survive the expiration or termination of this Agreement, subject to the provisions and limitations of this Agreement and all otherwise applicable statutes of limitations and repose.

16. TERMINATION

16.1. **City Termination.** City may terminate this Agreement for any reason on five calendar days' written notice to Consultant. Consultant agrees to cease all work under this Agreement on or before the effective date of any notice of termination. All City data, documents, objects, materials or other tangible things shall be returned to City upon the termination or expiration of this Agreement.

16.2. **Consultant Termination.** Consultant may terminate this Agreement for a material breach of this Agreement upon 30 days' notice.

Docusign Envelope ID: D4C55326-6A06-463D-B30A-0614AC2616CE

16.3. **Compensation Following Termination.** Upon termination, Consultant shall be paid for all hours worked and verified and any applicable conversion fees. In no event shall Consultant be entitled to receive more than the amount that would be paid to Consultant for the full performance of the services required by this Agreement. The City shall have the benefit of such work as may have been completed up to the time of such termination.

16.4. **Remedies.** City retains any and all available legal and equitable remedies for Consultant's breach of this Agreement.

17. INTERPRETATION OF AGREEMENT

17.1. **Governing Law.** This Agreement shall be governed and construed in accordance with the laws of the State of California.

17.2. **Integration of Exhibits.** All documents referenced as exhibits in this Agreement are hereby incorporated into this Agreement. In the event of any material discrepancy between the express provisions of this Agreement and the provisions of any document incorporated herein by reference, the provisions of this Agreement shall prevail. This instrument contains the entire Agreement between City and Consultant with respect to the transactions contemplated herein. No other prior oral or written agreements are binding upon the parties. Amendments hereto or deviations herefrom shall be effective and binding only if made in writing and executed on by City and Consultant.

17.3. **Headings.** The headings and captions appearing at the commencement of the sections hereof, and in any paragraph thereof, are descriptive only and for convenience in reference to this Agreement. Should there be any conflict between such heading, and the section or paragraph thereof at the head of which it appears, the language of the section or paragraph shall control and govern in the construction of this Agreement.

17.4. **Pronouns.** Masculine or feminine pronouns shall be substituted for the neuter form and vice versa, and the plural shall be substituted for the singular form and vice versa, in any place or places herein in which the context requires such substitution(s).

17.5. **Severability.** If any term or provision of this Agreement or the application thereof to any person or circumstance shall, to any extent, be invalid or unenforceable, then such term or provision shall be amended to, and solely to the extent necessary to, cure such invalidity or unenforceability, and shall be enforceable in its amended form. In such event, the remainder of this Agreement, or the application of such term or provision to persons or circumstances other than those as to which it is held invalid or unenforceable, shall not be affected, and each term and provision of this Agreement shall be valid and be enforced to the fullest extent permitted by law.

Docusign Envelope ID: D4C55326-6A06-463D-B30A-0614AC2616CE

17.6. **No Presumption Against Drafter.** Each party had an opportunity to consult with an attorney in reviewing and drafting this agreement. Any uncertainty or ambiguity shall not be construed for or against any party based on attribution of drafting to any party.

18. GENERAL PROVISIONS

18.1. **Confidentiality.** All data, documents, discussion, or other information developed or received by Consultant for performance of this Agreement are deemed confidential and Consultant shall not disclose it without prior written consent by City. City shall grant such consent if disclosure is legally required. All City data shall be returned to City upon the termination or expiration of this Agreement. Confidential information shall not include (1) information that is in the public domain; (2) information that was known to the receiving party before receipt of the information from the disclosing party; or, (3) information received from a third party having the right to lawfully possess and disclose such information without breaching any promise of confidentiality. In addition, no receiving party shall be in violation of this Agreement if required to disclose such information by a court of competent jurisdiction or governmental agency with power to force disclosure. However, upon receipt of a subpoena or other order to produce Confidential Information, the receiving party shall promptly notify the disclosing party in writing of such disclosure requirement.

18.2. **Conflicts of Interest.** Consultant maintains and warrants that it has not employed nor retained any company or person, other than a bona fide employee working solely for Consultant, to solicit or secure this Agreement. Further, Consultant warrants that it has not paid nor has it agreed to pay any company or person, other than a bona fide employee working solely for Consultant, any fee, commission, percentage, brokerage fee, gift or other consideration contingent upon or resulting from the award or making of this Agreement. Consultant further agrees to file, or shall cause its employees or subcontractor to file, a Statement of Economic Interest with the City's Filing Officer if required under state law in the performance of the services. For breach or violation of this warranty, City shall have the right to rescind this Agreement without liability. For the term of this Agreement, no member, officer, or employee of City, during the term of his or her service with City, shall have any direct interest in this Agreement, or obtain any present or anticipated material benefit arising therefrom.

18.3. **Non-assignment.** Consultant shall not delegate, transfer, subcontract or assign its duties or rights hereunder, either in whole or in part, without City's prior written consent, and any attempt to do so shall be void and of no effect. City shall not be obligated or liable under this Agreement to any party other than Consultant.

18.4. **Binding on Successors.** This Agreement shall be binding on the successors and assigns of the parties.

18.5. **No Third-Party Beneficiaries.** Except as expressly stated herein, there is no intended third-party beneficiary of any right or obligation assumed by the parties.

Docusign Envelope ID: D4C55326-6A06-463D-B30A-0614AC2616CE

18.6. **Time of the Essence.** Time is of the essence for each and every provision of this Agreement.

18.7. **Non-Discrimination.** Consultant shall not discriminate against any employee or applicant for employment because of race, sex (including pregnancy, childbirth, or related medical condition), creed, national origin, color, disability as defined by law, disabled veteran status, Vietnam veteran status, religion, age (40 and above), medical condition (cancer-related), marital status, ancestry, or sexual orientation. Employment actions to which this provision applies shall include, but not be limited to, the following: employment, upgrading, demotion, or transfer; recruitment or recruitment advertising; layoff or termination; rates of pay or other forms of compensation; or in terms, conditions or privileges of employment, and selection for training. Consultant agrees to post in conspicuous places, available to employees and applicants for employment, the provisions of this nondiscrimination clause.

18.8. **Waiver.** No provision, covenant, or condition of this Agreement shall be deemed to have been waived by City or Consultant unless in writing signed by one authorized to bind the party asserted to have consented to the waiver. The waiver by City or Consultant of any breach of any provision, covenant, or condition of this Agreement shall not be deemed to be a waiver of any subsequent breach of the same or any other provision, covenant, or condition.

18.9. **Excused Failure to Perform.** Consultant shall not be liable for any failure to perform if Consultant presents acceptable evidence, in City's sole judgment, that such failure was due to causes beyond the control and without the fault or negligence of Consultant.

18.10. **Remedies Non-Exclusive.** Each right, power and remedy provided for herein or now or hereafter existing at law, in equity, by statute, or otherwise shall be cumulative and shall be in addition to every other right, power, or remedy provided for herein or now or hereafter existing at law, in equity, by statute, or otherwise. The exercise, the commencement of the exercise, or the forbearance from the exercise by any party of any one or more of such rights, powers or remedies shall not preclude the simultaneous or later exercise by such party of any or all of such other rights, powers or remedies.

18.11. **Attorneys' Fees.** If legal action shall be necessary to enforce any term, covenant or condition contained in this Agreement, the prevailing party shall be entitled to an award of reasonable attorneys' fees and costs expended in the action.

18.12. **Venue.** The venue for any litigation shall be Los Angeles County, California and Consultant hereby consents to jurisdiction in Los Angeles County for purposes of resolving any dispute or enforcing any obligation arising under this Agreement.

TO EFFECTUATE THIS AGREEMENT, the parties have caused their duly authorized representatives to execute this Agreement on the dates set forth below.

Docusign Envelope ID: D4C55326-6A06-463D-B30A-0614AC2616CE

"City"
City of South Pasadena

By: Signed by: Donald E. Penman C9C235A36ABD40C...
Signature

Printed: Donald E. Penman

Title: Interim City Manager

Date: 10/2/2024

"Consultant"
Robert Half Inc.EOE

By: DocuSigned by: Chris Garza 4B463DB073F0412...
Signature

Printed: Chriz Garza

Title: Senior Vice President
Date: 10/1/2024

Attest:

By: DocuSigned by: Mark Perez 8C28A8A8EFB14A7...
Mark Perez
Deputy City Clerk

Date: 10/2/2024

Approved as to form:

By: DocuSigned by: Roxanne M. Diaz A7800E5CA8A241F...
Roxanne Diaz, City Attorney

Date: 10/2/2024

Docusign Envelope ID: D4C55326-6A06-463D-B30A-0614AC2616CE

EXHIBIT A: SCOPE OF SERVICES

Consultant shall provide City with temporary staffing services.

Consultant's employees that are temporary assigned to City to provide services shall be referred to herein as Assigned Individuals"

In order to request Consultant provide City services, City will provide Consultant with notice (e.g., via telephone, e-mail, facsimile, or mail) describing the services needed in reasonable detail. Consultant will promptly reply to such request, cooperate with City regarding identifying a suitable Assigned Individual and indicate whether Consultant will or will not provide the requested Services. The parties will execute an engagement letter substantially in the form of Exhibit C starting at minimum the Assigned Individual's name, role, bill rate, overtime rate, and start date ("engagement letter", See form at Exhibit C).

The maximum length of any assignment with the City will be three year fiscal years unless the Assigned Individual is a CalPERS annuitant in which case the maximum length will be 960 hours per fiscal year.

Nothing in this Agreement shall obligate any Robert Half Inc. branch office, other than the administrative & customer support, finance and accounting contract talent, and finance & accounting full-time engagement professional practice groups of the branch office located in Pasadena, California to perform services for City under the terms and conditions contained herein. Notwithstanding the foregoing, Robert Half Inc. shall be responsible for any liability or claim arising out of the performance of the services under the terms of this Agreement.

Consultant shall be the employer of all Assigned Individuals, and shall perform or be responsible for the following:

a) Recruiting, screening, interviewing and hiring employees in accordance with all applicable state and federal laws;
b) Establishing, calculating, paying wages and overtime, and providing any benefits to employees that Robert half offers to them;
c) Paying or withholding all required payroll taxes and insurance premiums for programs that an employer is required by law to provide to its employees;
d) Providing workers' compensation benefits or coverage for its employees in amounts at least equal to what is required by law;
e) Fulfilling the employer's obligations for unemployment compensation;
f) Making legally required employment law disclosures (wage-hour posters, etc.) to its employees;
g) Exercising human resources (i.e., non-operational) supervision of its employees (i.e., orienting, reassigning, counseling, disciplining, and discharging employees in accordance with the law);

Docusign Envelope ID: D4C55326-6A06-463D-B30A-0614AC2616CE

h) Maintaining personnel and payroll records; and
i) Requiring its employees to acknowledge that they will have no right to participate in any employee benefit plans of Client.

If City requires Consultant to perform background checks or other placement screenings of Assigned Individuals, City agrees to notify Consultant prior to the start of services under this Agreement. Consultant will conduct such checks or screenings only if they are described in a signed, written amendment to this Agreement. If City requests a copy of the results of any checks conducted on Consultant's Assigned Individuals, City agrees to keep such results strictly confidential and to use such results in accordance with applicable laws and solely for employment purposes.

It is understood that City has full responsibility for: (i) providing safe working conditions as required by law, including compliance with all public health and occupational safety regulations and guidelines applicable to City's business, and (ii) ensuring that safety plans exist for, and safety related training is provided to, Assigned Individuals working on City's premises.

City shall supervise Assigned Individuals providing services to City. City shall not permit or require Assigned Individuals:
(i) to perform services outside of the scope of Assigned Individual's assignment;
(ii) to sign contracts or statements (including SEC documents);
(iii) to make any management decisions;
(iv) to make any final decisions regarding system design, software development or the acquisition of hardware or software;
(v) to sign, endorse, wire, transport or otherwise convey cash, securities, checks, or any negotiable instruments or valuables;
(vi) to use computers, or other electronic devices, software or network equipment owned or licensed by Assigned Individual;
(vii) to operate machinery (other than office machines) or automotive equipment.

City may request that Consultant permit its Assigned Individuals to provide services to City remotely (i.e., from a location other than City's offices) using City's or Consultant's laptop and/or other computer or telecommunications equipment (the "Equipment"). City acknowledges and agrees that Consultant shall have no control over, and City shall be solely responsible for, (i) the logical and physical performance, reliability and security of the Equipment or related devices, network accessibility and availability, software, services, tools and e-mail accounts (collectively, "Computer Systems") used by the Assigned Individual, and (ii) the security, integrity, and backing up of the data and other information stored therein or transmitted thereby. Moreover, City must not permit Assigned Individual to save or store any of City's files or other data on the Computer Systems provided by Consultant (including, but not limited to, any virtual desktop infrastructure solution). City agrees that Consultant shall not be liable for any loss, damage,

Docusign Envelope ID: D4C55326-6A06-463D-B30A-0614AC2616CE

expense, harm, business interruption or inconvenience resulting from the use of such Computer Systems.

Since Consultant is not a professional accounting firm, City agrees that City will not permit or require Assigned Individual (a) to render an opinion on behalf of Consultant or on City's behalf regarding financial statements; (b) to sign the name of Consultant on any document; or (c) to sign their own names on financial statements or tax returns.

Assigned Individuals shall obey and follow all personnel rules and regulations required of employees of the City.

Docusign Envelope ID: D4C55326-6A06-463D-B30A-0614AC2616CE

EXHIBIT B – COMPENSATION

Hourly rates for all assignments shall be stated in the engagement letter for such Assigned Individual for such assignment. No compensation is contemplated to Contractor outside of the rates stated for the hours worked for Assigned Individuals or as otherwise stated in this Exhibit B.

Notwithstanding section 7.6 of the Agreement, Consultant guarantees City's satisfaction with Consultant's Assigned Individual's services by extending to City an eight (8) hour guarantee period. If, for any reason, City is dissatisfied with the Assigned Individual assigned to City, Consultant will not charge for the first eight (8) hours worked, provided Consultant is allowed to replace the Assigned Individual. Unless City contacts Consultant before the end of the guarantee period, City agrees that Consultant's Assigned Individual is satisfactory for purposes of this guarantee. At any time during the engagement, the City may request that an Assigned Individual be released from engagement by the City and request that a different individual be assigned, pursuant to a renewed engagement request and new engagement letter.

The Assigned Individual will present a time sheet or an electronic time record to City for verification and approval at the end of each week. Assigned Individual shall transmit such time sheet or electronic time record to Consultant. Consultant will bill City monthly for the total hours worked. Consultant's invoices are due within 30 days of receipt, including applicable sales and service taxes all of which are payable by City.

If applicable, overtime will be billed at 1.50 times the normal billing rate. Federal law defines overtime as hours in excess of 40 hours per week, state laws vary. If state law requires double time pay, the double time hours will be billed at 2.00 times the normal billing rate.

Consultant may charge City a fee for the provision of equipment or technology, if City requests that Assigned Individual use equipment or technology provided by Consultant, and such fee is identified in the engagement letter.

Consultant may also increase Consultant’s rates to reflect increases in Consultant’s cost of doing business, including costs associated with higher wages for workers and/or related taxes, benefits or other costs; such increase shall be indicated in an engagement letter reflecting such increase. Any increase in rates will be prospective, starting as of the effective date Consultant specifies in the engagement letter.

In the event City wishes to convert any of Consultant’s Assigned Individuals from the administrative & customer support contract talent or finance & accounting contract talent practice groups, City agrees to pay a conversion fee in accordance with this Section. The conversion fee will equal a percentage of the Assigned Individual's aggregate annual compensation, including bonuses, based on the number of hours billed and paid. City agrees to pay a conversion fee if Consultant's Assigned Individual is hired by an affiliate or other related

Docusign Envelope ID: D4C55326-6A06-463D-B30A-0614AC2616CE

business entity as a result of City's subsequent referral of the Assigned Individual or one of City's customers as a result of Assigned Individual providing services to that customer. The conversion fee is payable if City hires the Assigned Individual, regardless of the job classification, on either a full-time, temporary (including temporary assignments through another agency) or consulting basis within twelve months after the last day of the assignment. The same calculation will be used if City converts Consultant's Assigned Individual on a part-time basis using the full-time equivalent salary; however, the conversion fee will not be less than $1,000.

Hours Billed and Paid	Conversion Fee
0 to 160 hours	30%
161 hours to 320 hours	20%
321 hours to 640 hours	15%
641 hours or more	10%

Consultant's employees from the finance & accounting full-time contract talent practice group ("Full-Time Contract Talent") are full-time, salaried employees of Consultant, and clients are discouraged from directly hiring Consultant Full-Time Contract Talents. City agrees to seek Consultant's permission before City hires Consultant's Full-Time Contract Talent. City also agrees to pay a conversion fee if City hires Consultant's Full-Time Contract Talent, regardless of the employment classification, on either a full-time, temporary (including temporary engagements through another agency) or consulting basis within twelve months after the last day of the engagement. City also agrees to pay a conversion fee if Consultant's Full-Time Contract Talent assigned to City is hired by (i) a subsidiary or other related company or business as a result of City's referral of Consultant's Full-Time Contract Talent to that company or (ii) one of City's customers as a result of Consultant's Full-Time Contract Talent providing services to that customer. The conversion fee will equal 50% of the Full-Time Contract Talent's aggregate annual compensation, including bonuses. The conversion fee will be owed and invoiced upon City's hiring of Consultant's Full-Time Contract Talent, and payment is due upon receipt of this invoice. The same calculation will be used if City converts Consultant's Full-Time Contract Talent on a part-time basis using the full-time equivalent salary.

Robert Half®

Exhibit C

October 3, 2024

Personal & Confidential
WILLIAM CASTRILLON
CITY OF SOUTH PASADENA
1414 MISSION STREET
SOUTH PASADENA, CA 91030

Job Order Number: 00490-0013080237

Dear William,

Thank you for selecting Robert Half to meet your talent solutions needs. Clarissa Koo is scheduled to start with City of South Pasadena as an Accounts Payable Specialist on 10-03-2024. As agreed, we will invoice your firm at the rate of $58.89 per hour. Overtime will be billed at 1.50 times such rate. Please find the enclosed General Conditions of Assignment and Terms of Payment for your review.

Our professional will submit a time report for verification and approval at the end of each week. Your approval thereby will indicate you have read and agree to the enclosed General Conditions of Assignment and Terms of Payment.

Please do not hesitate to contact us if you have any questions or we can be of additional service. We look forward to working with you.

Sincerely,

Robert Half
790 E. Colorado Blvd
Ste 800
Pasadena, CA 91101-2197
(800) 803-8367

© Robert Half Inc. 2024. All rights reserved.

An Equal Opportunity Employer M/F/Disability/Veterans.

GENERAL CONDITIONS OF ASSIGNMENT

Thank you for your confidence in *Robert Half*. The following General Conditions of Assignment and the enclosed Terms of Payment apply to this assignment.

Scope of Assignment	Our professional is only authorized to perform work within the scope of the assignment. It is your responsibility to provide appropriate direction, guidance or oversight to our professional for satisfactory performance on your assignment. You will not permit our professional to use computers or other electronic devices, software, services, tools, e-mail accounts or network equipment owned or licensed by our professional. Since *Robert Half* is not a professional accounting firm, it is expressly understood that our professionals are not authorized to render an opinion on behalf of *Robert Half* or on your behalf on financial statements, nor are our professionals authorized to sign the name of *Robert Half* on any document or to sign their own names on financial statements or tax returns.
Client's Responsibility	**It is understood that you are responsible for implementing and maintaining usual, customary and appropriate internal accounting procedures and controls, internal controls and other appropriate procedures and controls (including information technology, proprietary information, creative designs and trade secret safeguards) for your company and we shall not be responsible for any losses, liabilities or claims arising from the lack of such controls or procedures. Please notify us immediately if you require *Robert Half* to perform background checks or other placement screenings of our professional. We will conduct such checks or screenings for you only if they are described in a signed, written amendment to these General Conditions of Assignment.** ***Cash Handling and Other Financial Transactions and Activities:*** If you permit or allow our professional to sign, endorse, wire, transport or otherwise convey cash, securities, checks, or any negotiable instruments or valuables, or conduct financial transactions or other related activities, you accept sole responsibility for all claims, demands and liability that may arise from permitting these activities. You represent and warrant that to the extent you permit or allow our professional to engage in the activities described in this paragraph, you will not permit or allow our professional to handle more than (i) $1,000 per day if you are a non-profit entity, or (ii) $25,000 per day if you are a for-profit entity. ***Workplace Safety:*** It is understood that you have full responsibility for: (i) providing safe working conditions as required by law, including compliance with all public health and occupational safety regulations and guidelines applicable to your business, and (ii) ensuring that safety plans exist for, and safety related training is provided to, our professional working on your premises. To ensure the safety of potentially vulnerable individuals on your premises, you agree not to permit our professional to have unsupervised or unmonitored contact with (1) minors and (2) adults who are under your care, custody or supervision because of mental health impairments. ***Government Contracts:*** If this assignment is for work to be performed under a government contract or subcontract, you will notify us immediately (1) of any obligations in the government contract or subcontract relating to wages, and (2) if we are legally required to initiate E-Verify verification procedures for our professional. ***Operation of Vehicles and Equipment:*** It is understood that we will not authorize our professional to operate machinery (other than office machines) or vehicles. If you wish to permit our professional to drive for business purposes, you accept sole responsibility for all liability, damages, injuries or other claims that may arise or be incurred as a result of driving. If you require our professional to drive a vehicle owned by you or an employee of your company, you agree to maintain such vehicle in good working condition and maintain all necessary and appropriate insurance for the operation of such vehicle. Under no circumstances will you permit our professional to: make bank deposits; carry cash in excess of $100, negotiable instruments or other valuables while driving; or have passengers in the vehicle. It is agreed that you accept full responsibility for, and that we do not maintain insurance to cover any injury, damage, or loss that may result from your failure to comply with the foregoing. ***Claims:*** It is understood that you are responsible for reporting any claim to us in writing during or within ninety (90) days after the assignment. Under no circumstance will *Robert Half* be responsible for any claim related to the assignment, including but not limited to work performed by our professional, unless you have reported such claim in writing to us within ninety (90) days after termination of the assignment.
Remote Work	You may request that our professional provide services to you remotely (i.e., from a location other than your or your customer's premises) using a laptop and/or other computer or telecommunications equipment provided by you or *Robert Half* (collectively, the "Equipment"). In such case, you acknowledge and agree that *Robert Half* shall have no control over, and you shall be solely responsible for, (i) the logical and physical performance, reliability and security of the Equipment or related devices, network accessibility and availability, software, services, tools and e-mail accounts (collectively, "Computer Systems") used by our professional, and (ii) the security, integrity and backing up, of the data and other information stored therein or transmitted thereby. Moreover, you must not permit our professional to save or store any of your files or other data on the Computer Systems provided by us (including, but not limited to, any virtual desktop infrastructure solution). You agree that we shall not be liable for any loss, damage, expense, harm, business interruption or inconvenience resulting from the use of such Computer Systems.

- CONTINUED ON REVERSE -

TERMS OF PAYMENT

Thank you for your confidence in *Robert Half*. Our professional for this assignment of Accounts Payable Specialist is Clarissa Koo. The assignment will start on 10-03-2024. As agreed or otherwise communicated, we will invoice your firm at the rate of $58.89 per hour. Should you wish to use our professional for other assignments, please let us know. The hourly billing rate may then change to reflect the experience necessary for the assignment. Call *Robert Half* for any changes in the assignment. We request a minimum thirty (30) days' notice prior to ending any assignment.

The following Terms of Payment apply to this assignment:

Guarantee	*Robert Half* guarantees your satisfaction with our professional's services by extending to you a one-day (8 hours) guarantee period. If, for any reason, you are dissatisfied with our professional, *Robert Half* will not charge for the first eight hours of work by the professional, provided that *Robert Half* is allowed to replace the professional. Unless you contact us before the end of the first eight hours guarantee period, you agree that our professional is satisfactory.
Time Report	Our professional will submit a time report for verification and approval at the end of each week. Your approval thereby indicates your acknowledgement of the General Conditions of Assignment and these Terms of Payment. Our compensation to our professional is on a weekly basis, and you will be billed weekly for the total hours of work by the professional, including time spent completing, revising, and/or resubmitting a time report during business hours, and we ask that you respect those guidelines. Because *Robert Half* invoices reflect payroll we have already paid, our invoices are due upon receipt. Applicable sales and service taxes shall be added to these invoices. In the event that you fail to pay the invoice when due, you agree to pay all of our costs of collection, including reasonable attorneys' fees, whether or not legal action is initiated. Additionally, we may, at our option, charge interest on any overdue amounts at a rate of the lesser of 1 1/2% per month or the highest rate allowed by applicable law from the date the amount first became due.
Overtime	Overtime will be billed at 1.50 times the normal billing rate. Overtime applies when hours of work by the professional exceed 40 hours per week (and in California exceed more than 8 hours in a day and as other state laws may require). If state law requires double time pay, the double time hours will be billed at 2.00 times the normal billing rate.
Hiring the Person Referred to You	After you evaluate the performance and potential of our professional, you may wish to employ this person directly. Our professionals represent our pool of skilled professionals and in the event you wish them converted to your employ or another employer to whom you refer them, you agree to pay a conversion fee. The conversion fee is payable if you hire our professional, regardless of the employment classification, on either a full-time, temporary (including temporary assignments through another agency) or consulting basis within twelve months after the last day of the assignment. You also agree to pay a conversion fee if our professional is hired by (i) a subsidiary or other related company or business as a result of your referral of our professional to that company or (ii) one of your customers as a result of our professional providing services to that customer. The conversion fee will equal 35% of the professional's aggregate annual compensation, including bonuses. The conversion fee will be owed and invoiced upon your hiring of our professional, and payment is due upon receipt of this invoice. The same calculation will be used if you convert our professional on a part-time basis using the full-time equivalent salary.
Employment Taxes and Withholdings	*Robert Half* will handle, to the extent applicable, any workers' compensation insurance, federal, state and local withholding taxes and unemployment taxes, as well as social security, state disability insurance or other payroll charges.
General Conditions	*Robert Half* may charge you a technology fee for the provision of equipment or technology, if you request that our professional use equipment or technology provided by us. *Robert Half* may also increase our rates provided under the Terms of Payment to reflect increases in our own costs of doing business, including costs associated with higher wages for workers and/or related tax, benefit and other costs. We will provide written or verbal notice of the technology fees and/or increase in our rates. Any increase in our rates will be prospective, starting as of the effective date *Robert Half* specifies. A copy of the General Conditions of Assignment has been provided to you. We reserve the right to replace our professional.

Job Order: 00490-0013080237 Date: 10-03-2024

City Council Agenda Report

ITEM NO. 16

DATE: June 18, 2025

FROM: Todd Hileman, City Manager

PREPARED BY: William Castrillon, Budget and Purchasing Manager
Alma Medina, Assistant to the City Manager

SUBJECT: **CONSIDERATION OF APPROVAL OF REVISED FISCAL YEAR 2025-2026 BUDGET DEVELOPMENT CALENDAR**

Recommendation
It is recommended that the City Council approve the proposed revised Fiscal Year 2025-2026 Budget Development Calendar.

Attachment:
Attachment No. 1 - Revised Budget Calendar

City of South Pasadena
FY 25-26 Budget Calendar
Rev. 5/12/2025

Operational Budget

May

- **5/08**: Propose New Budget Schedule to Finance Commission
- **5/15:** Community Survey Results via Memo
- **5/21:** Present New Budget Schedule to City Council

June

- **6/02-6/20**: Staff Develops Operational Budget
- **6/23-6/27**: City Manager Reviews Operational Budgets
- **6/30-7/02**: Budget Book Production

July

- **7/07-7/15**: Staff Review Draft Budget
- **7/16**: Release the Draft Budget to City Council and Finance Commission
- **7/24:** Present Operational Budget for Review to the Finance Commission
- **7/30:** City Council Study Session #1: Operational Budget

August

- **8/1-8/08**: Incorporate City Council Feedback
- **8/06:** Community Budget Meeting
- **8/10:** Notice of Public Hearing
- **8/13:** Joint City Council and Finance Commission Study Session #2: Operational Budget
- **8/20**: Present Budget for Adoption to City Council

CIP Budget

May

- **5/08**: Propose New Budget Schedule to the Finance Commission
- **5/12-5/30**: Develop Preliminary 5-Year CIP Budget
- **5/13**: Meet with City Manager to Review 5-year CIP Budget
- **5/21:** Present New Budget Schedule to City Council

June

- **6/04**: Joint City Council and Finance Commission Study Session: CIP Budget
- **6/08**: Notice of Public Hearing
- **6/11:** Public Works Commission CIP Budget Review
- **6/18**: Present CIP Budget for Adoption to City Council. Not a Joint Meeting Needed.

City Council Agenda Report

ITEM NO. 17

DATE: June 18, 2025

FROM: Todd Hileman, City Manager

PREPARED BY: William Castrillon, Budget and Purchasing Manager
Alma Medina, Assistant to the City Manager

SUBJECT: **CONSIDERATION TO APPROVE THE FIRST AMENDMENT TO THE PROFESSIONAL SERVICES AGREEMENT WITH LAKEVIEW CONSULTING, LLC., FOR TEMPORARY STAFFING SERVICES, AT A COST OF $18,000 FOR A NEW TOTAL NOT-TO-EXCEED AMOUNT OF $48,000, AND EXTENDING THE AGREEMENT THROUGH JULY 31, 2025**

Recommendation

It is recommended that the City Council consider approving the proposed First Amendment to the Professional Services Agreement with Lakeview Consulting, LLC., in the amount of $18,000, for continued temporary staffing services, for a new total not-to-exceed compensation amount of $48,000, and extending the agreement through July 31, 2025.

Executive Summary

The Finance Department continues to experience staffing vacancies in key leadership positions. To maintain operational stability and compliance with financial reporting requirements, the City has engaged Lakeview Consulting, LLC., to provide Interim Accounting Manager/Controller services. Staff is recommending approval of an amendment to the existing agreement to extend these services through July 31, 2025, and to increase the total compensation by $18,000. This will ensure uninterrupted financial oversight while recruitment for permanent staff continues. Recruitments are currently underway for Senior Accountant (2) and Controller.

Background

The City entered into an agreement with Lakeview Consulting, LLC., to provide interim Accounting Manager/Controller services following the departure of key staff in the Finance Department. These services have been essential in maintaining the City's financial operations, including oversight of accounting functions, audit coordination, and preparation of financial statements. Due to ongoing vacancies in the department, continued interim support is necessary to ensure operational continuity and compliance with financial regulations and reporting requirements. Staff recommends the approval of the proposed amendment to extend the agreement through July 31, 2025, in an amount not to exceed of $18,000, for a new total contract amount of $48,000.

Analysis
Lakeview Consulting has delivered consistent, high-quality interim support to the Finance Department. The existing agreement is set to expire before permanent staff are expected to be hired. To avoid a gap in critical financial leadership, staff recommends extending the term of the agreement through July 31, 2025. The amendment would also increase the contract amount by $18,000, which is projected to be sufficient to cover continued services based on current usage levels.

Retaining a known and effective consultant during this transitional period reduces the risk of operational delays and ensures that the City's financial responsibilities, including upcoming audit and budget processes, are met in a timely and professional manner.

Fiscal Impact
The proposed amendment will be funded from the Department's salary savings from the currently vacant Accounting Manager- Controller position.

Attachment:
Attachment No. 1 - Proposed First Amendment
Attachment No. 2 - Professional Services Agreement

FIRST AMENDMENT TO PROFESSIONAL SERVICES AGREEMENT FOR CONSULTANT SERVICES

THIS AMENDMENT ("Amendment") is made on this 18th day of June 2025, by and between the CITY OF SOUTH PASADENA ("CITY") and LAKEVIEW CONSULTING, LLC. ("CONSULTANT').

RECITALS

WHEREAS, on May 19, 2025, the CITY and CONSULTANT entered into an Agreement for PROFESSIONAL SERVICES ("Agreement") for CONSULTANT to perform Interim Accounting Manager-Controller services for the City; and

WHEREAS, the original Agreement was in the amount of $30,000, for the Scope of Services; and

WHEREAS, the CITY desires to execute an Amendment to increase the total contract in an amount not to exceed $18,000 and extend the term of the agreement through July 31, 2025. The aggregate total of Agreement and this Amendment is a sum total of $48,000; and

NOW THEREFORE, THE CITY AND THE CONSULTANT AGREE AS FOLLOWS:

1. That Section 3.4 "Maximum Amount" of the Agreement is hereby amended to read as follows:
   "Maximum Amount": The highest total compensation and cost payable to CONSULTANT by CITY under this agreement. The Maximum Amount under this Agreement is Forty-Eight Thousand Dollars ($48,000).

2. That Section 3.6 "Termination Date" of the Agreement is hereby amended to read as follows:
   "Termination Date": July 31, 2025

3. All other terms, conditions, and provisions of the Agreement to the extent not modified by this Amendment, shall remain in full force and effect.

"City" City of South Pasadena	"Consultant" Lakeview Consulting, LLC.
By:_____ *Signature*	By:_____ *Signature*
Printed: Todd Hileman	Printed: Jonathon Davis
Title: City Manager	Title: Director of Business Services
Date:_____	Date:_____

Attest:

By:_____
Hector Gomez, Chief City Clerk

Date:_____

Approved as to form:

By:_____
Roxanne M. Diaz, City Attorney

Date:_____

Docusign Envelope ID: 927345B5-C52C-49E4-A0AB-0C2790DCFE73

PROFESSIONAL SERVICES AGREEMENT FOR CONSULTANT SERVICES

(City of South Pasadena / Lakeview Consulting, LLC.)

1. IDENTIFICATION

This PROFESSIONAL SERVICES AGREEMENT ("Agreement") is entered into by and between the City of South Pasadena, a California municipal corporation ("City"), and Lakeview Consulting, LLC. ("Consultant").

2. RECITALS

2.1. City has determined that it requires the following professional services from a consultant: Interim Accounting Manager-Controller

2.2. Consultant represents that it is fully qualified to perform such professional services by virtue of its experience and the training, education and expertise of its principals and employees. Consultant further represents that it is willing to accept responsibility for performing such services in accordance with the terms and conditions set forth in this Agreement.

2.3. Consultant represents that it has no known relationships with third parties, City Council members, or employees of City which would (1) present a conflict of interest with the rendering of services under this Agreement under Government Code Section 1090, the Political Reform Act (Government Code Section 81000 *et seq.*), or other applicable law, (2) prevent Consultant from performing the terms of this Agreement, or (3) present a significant opportunity for the disclosure of confidential information.

NOW, THEREFORE, for and in consideration of the mutual covenants and conditions herein contained, City and Consultant agree as follows:

3. DEFINITIONS

3.1. "Scope of Services": See Exhibit A

3.2. "Agreement Administrator": The Agreement Administrator for this project is Todd Hileman, City Manager. The Agreement Administrator shall be the principal point of contact at the City for this project. All services under this Agreement shall be performed at the request of the Agreement Administrator. The Agreement Administrator will establish the timetable for completion of services and any interim milestones. The City reserves the right to change this designation upon written notice to Consultant.

Docusign Envelope ID: 927345B5-C52C-49E4-A0AB-0C2790DCFE73

3.3. "Approved Fee Schedule": Consultant's compensation rates are set forth in the fee schedule attached hereto as Exhibit B and incorporated herein by this reference. This fee schedule shall remain in effect for the duration of this Agreement unless modified in writing by mutual agreement of the parties.

3.4. "Maximum Amount": The highest total compensation and costs payable to Consultant by City under this Agreement. The Maximum Amount under this Agreement is Thirty Thousand Dollars ($30,000.00).

3.5. "Commencement Date": May 19, 2025

3.6. "Termination Date": June 30, 2025

4. TERM

The term of this Agreement shall commence at 12:00 a.m. on the Commencement Date and shall expire at 11:59 p.m. on the Termination Date unless extended by written agreement of the parties or terminated earlier under Section 18 ("Termination") below. Consultant may request extensions of time to perform the services required hereunder. Such extensions shall be effective if authorized in advance by City in writing and incorporated in written amendments to this Agreement.

5. CONSULTANT'S DUTIES

5.1. **Services**. Consultant shall perform the services identified in the Scope of Services. The City shall have the right to request, in writing, changes in the Scope of Services. Any such changes mutually agreed upon by the parties, and any corresponding increase or decrease in compensation, shall be incorporated by written amendment to this Agreement.

5.2. **Coordination with City**. In performing services under this Agreement, Consultant shall coordinate all contact with City through its Agreement Administrator.

5.3. **Budgetary Notification**. Consultant shall notify the Agreement Administrator, in writing, when fees and expenses incurred under this Agreement have reached eighty percent (80%) of the Maximum Amount. Consultant shall concurrently inform the Agreement Administrator, in writing, of Consultant's estimate of total expenditures required to complete its current assignments before proceeding, when the remaining work on such assignments would exceed the Maximum Amount.

5.4. **Business License.** Consultant shall obtain and maintain in force a City business license for the duration of this Agreement.

Docusign Envelope ID: 927345B5-C52C-49E4-A0AB-0C2790DCFE73

5.5. **Professional Standards.** Consultant shall perform all work to the standards of Consultant's profession and in a manner reasonably satisfactory to City. Consultant shall keep itself fully informed of and in compliance with all local, state, and federal laws, rules, and regulations in any manner affecting the performance of this Agreement, including all Cal/OSHA requirements, the conflict-of-interest provisions of Government Code § 1090 and the Political Reform Act (Government Code § 81000 et seq.).

5.6. **Avoid Conflicts.** During the term of this Agreement, Consultant shall not perform any work for another person or entity for whom Consultant was not working at the Commencement Date if such work would present a conflict interfering with performance under this Agreement. However, City may consent in writing to Consultant's performance of such work.

5.7. **Appropriate Personnel.** Consultant has, or will secure at its own expense, all personnel required to perform the services identified in the Scope of Services. All such services shall be performed by Consultant or under its supervision, and all personnel engaged in the work shall be qualified to perform such services. Josette Reina-Luken shall be Consultant's project administrator and shall have direct responsibility for management of Consultant's performance under this Agreement. No change shall be made in Consultant's project administrator without City's prior written consent.

5.8. **Substitution of Personnel.** Any persons named in the proposal or Scope of Services constitutes a promise to the City that those persons will perform and coordinate their respective services under this Agreement. Should one or more such personnel become unavailable, Consultant may substitute other personnel of at least equal competence upon written approval of the City. If the City and Consultant cannot agree to the substitution of key personnel, the City may terminate this Agreement for cause.

5.9. **Permits and Approvals.** Consultant shall obtain, at its sole cost and expense, all permits and regulatory approvals necessary for Consultant's performance of this Agreement. This includes, but shall not be limited to, professional licenses, encroachment permits and building and safety permits and inspections.

5.10. **Notification of Organizational Changes.** Consultant shall notify the Agreement Administrator, in writing, of any change in name, ownership or control of Consultant's firm or of any subcontractor. Change of ownership or control of Consultant's firm may require an amendment to this Agreement.

5.11. **Records.** Consultant shall maintain all ledgers, books of account, invoices, vouchers, canceled checks, and other records or documents evidencing or relating to charges for services or expenditures and disbursements charged to City under this Agreement for a minimum of three (3) years, or for any longer period required by law, from the date of final payment to Consultant under this Agreement. All such documents shall be made available for inspection, audit, and/or copying at any time during regular business hours, upon oral or written requests of the City. In addition, pursuant to Government

Docusign Envelope ID: 927345B5-C52C-49E4-A0AB-0C2790DCFE73

Code Section 8546.7, if the amount of public funds expended under this Agreement exceeds ten thousand dollars, all such documents and this Agreement shall be subject to the examination and audit of the State Auditor, at the request of City or as part of any audit of City, for a period of three (3) years after final payment under this Agreement.

6. SUBCONTRACTING

6.1. **General Prohibition.** This Agreement covers professional services of a specific and unique nature. Except as otherwise provided herein, Consultant shall not assign or transfer its interest in this Agreement or subcontract any services to be performed without amending this Agreement.

6.2. **Consultant Responsible.** Consultant shall be responsible to City for all services to be performed under this Agreement.

6.3. **Identification in Fee Schedule.** All subcontractors shall be specifically listed and their billing rates identified in the Approved Fee Schedule, Exhibit B. Any changes must be approved by the Agreement Administrator in writing as an amendment to this Agreement.

6.4. **Compensation for Subcontractors.** City shall pay Consultant for work performed by its subcontractors, if any, only at Consultant's actual cost plus an approved mark-up as set forth in the Approved Fee Schedule, Exhibit B. Consultant shall be liable and accountable for all payments, compensation, and federal and state taxes to all subcontractors performing services under this Agreement. The City shall not be liable for any payment, compensation, or federal and state taxes for any subcontractors.

7. COMPENSATION

7.1. **General.** City agrees to compensate Consultant for the services provided under this Agreement, and Consultant agrees to accept payment in accordance with the Fee Schedule in full satisfaction for such services. Compensation shall not exceed the Maximum Amount. Consultant shall not be reimbursed for any expenses unless provided for in this Agreement or authorized in writing by City in advance.

7.2. **Invoices.** Consultant shall submit to City an invoice, monthly or as otherwise agreed to by the Agreement Administrator, for services performed pursuant to this Agreement. Each invoice shall identify the Maximum Amount, the services rendered during the billing period, the amount due for the invoice, and the total amount previously invoiced. All labor charges shall be itemized by employee name and classification/position with the firm, the corresponding hourly rate, the hours worked, a description of each labor charge, and the total amount due for labor charges.

Docusign Envelope ID: 927345B5-C52C-49E4-A0AB-0C2790DCFE73

7.3. **Taxes.** City shall not withhold applicable taxes or other payroll deductions from payments made to Consultant except as otherwise required by law. The consultant shall be solely responsible for calculating, withholding, and paying all taxes.

7.4. **Disputes.** The parties agree to meet and confer at mutually agreeable times to resolve any disputed amounts contained in an invoice submitted by the Consultant.

7.5. **Additional Work.** Consultant shall not be reimbursed for any expenses incurred for work performed outside the Scope of Services unless prior written approval is given by the City through a fully executed written amendment. Consultant shall not undertake any such work without prior written approval of the City.

7.6. **City Satisfaction as Precondition to Payment.** Notwithstanding any other terms of this Agreement, no payments shall be made to Consultant until City is satisfied that the services are satisfactory.

7.7. **Right to Withhold Payments.** If Consultant fails to provide a deposit or promptly satisfy an indemnity obligation described in Section 11, City shall have the right to withhold payments under this Agreement to offset that amount.

8. PREVAILING WAGES

Consultant is aware of the requirements of California Labor Code Section 1720, et seq., and 1770, et seq., as well as California Code of Regulations, Title 8, Section 16000, et seq., ("Prevailing Wage Laws"), which require the payment of prevailing wage rates and the performance of other requirements on certain "public works" and "maintenance" projects. Consultant shall defend, indemnify, and hold the City, tis elected officials, officers, employees, and agents free and harmless form any claim or liability arising out of any failure or alleged failure of Consultant to comply with the Prevailing Wage Laws.

9. OWNERSHIP OF WRITTEN PRODUCTS

All reports, documents or other written material ("written products" herein) developed by Consultant in the performance of this Agreement shall be and remain the property of City without restriction or limitation upon its use or dissemination by City except as provided by law. Consultant may take and retain copies of such written products as desired, but no such written products shall be the subject of a copyright application by Consultant.

10. RELATIONSHIP OF PARTIES

10.1. **General.** Consultant is, and shall at all times remain as to City, a wholly independent contractor.

Docusign Envelope ID: 927345B5-C52C-49E4-A0AB-0C2790DCFE73

10.2. **No Agent Authority.** Consultant shall have no power to incur any debt, obligation, or liability on behalf of the City or otherwise to act on behalf of City as an agent. Neither City nor any of its agents shall have control over the conduct of Consultant or any of Consultant's employees, except as set forth in this Agreement. Consultant shall not represent that it is, or that any of its agents or employees are, in any manner employees of City.

10.3. **Independent Contractor Status.** Under no circumstances shall Consultant or its employees look to the City as an employer. Consultant shall not be entitled to any benefits. City makes no representation as to the effect of this independent contractor relationship on Consultant's previously earned California Public Employees Retirement System ("CalPERS") retirement benefits, if any, and Consultant specifically assumes the responsibility for making such a determination. Consultant shall be responsible for all reports and obligations including, but not limited to social security taxes, income tax withholding, unemployment insurance, disability insurance, and workers' compensation, and other applicable federal and state taxes.

10.4. **Indemnification of CalPERS Determination.** In the event that Consultant or any employee, agent, or subcontractor of Consultant providing services under this Agreement claims or is determined by a court of competent jurisdiction or CalPERS to be eligible for enrollment in CalPERS as an employee of the City, Consultant shall indemnify, defend, and hold harmless City for the payment of any employee and/or employer contributions for CalPERS benefits on behalf of Consultant or its employees, agents, or subcontractors, as well as for the payment of any penalties and interest on such contributions, which would otherwise be the responsibility of City.

11. INDEMNIFICATION

11.1 **Definitions.** For purposes of this Section 11, "Consultant" shall include Consultant, its officers, employees, servants, agents, or subcontractors, or anyone directly or indirectly employed by either Consultant or its subcontractors, in the performance of this Agreement. "City" shall include City, its officers, agents, employees and volunteers.

11.2 **Consultant to Indemnify City.** To the fullest extent permitted by law, Consultant shall indemnify, hold harmless, and defend City from and against any and all claims, losses, costs or expenses for any personal injury or property damage arising out of or in connection with Consultant's alleged negligence, recklessness or willful misconduct or other wrongful acts, errors or omissions of Consultant or failure to comply with any provision in this Agreement.

11.3 **Scope of Indemnity.** Personal injury shall include injury or damage due to death or injury to any person, whether physical, emotional, consequential or otherwise, Property damage shall include injury to any personal or real property. Consultant shall not be required to indemnify City for such loss or damage as is caused by the sole active negligence or willful misconduct of the City.

Docusign Envelope ID: 927345B5-C52C-49E4-A0AB-0C2790DCFE73

11.4 **Attorneys Fees.** Such costs and expenses shall include reasonable attorneys' fees for counsel of City's choice, expert fees and all other costs and fees of litigation. Consultant shall not be entitled to any refund of attorneys' fees, defense costs or expenses in the event that it is adjudicated to have been non-negligent.

11.5 **Defense Deposit.** The City may request a deposit for defense costs from Consultant with respect to a claim. If the City requests a defense deposit, the Consultant shall provide it within 15 days of the request.

11.6 **Waiver of Statutory Immunity.** The obligations of Consultant under this Section 11 are not limited by the provisions of any workers' compensation act or similar act. Consultant expressly waives its statutory immunity under such statutes or laws as to City.

11.7 **Indemnification by Subcontractors.** Consultant agrees to obtain executed indemnity agreements with provisions identical to those set forth here in this Section 11 from each and every subcontractor or any other person or entity involved in the performance of this Agreement on Consultant's behalf.

11.8 **Insurance Not a Substitute.** City does not waive any indemnity rights by accepting any insurance policy or certificate required pursuant to this Agreement. Consultant's indemnification obligations apply regardless of whether or not any insurance policies are determined to be applicable to the claim, demand, damage, liability, loss, cost or expense.

12. INSURANCE

12.1. **Insurance Required.** Consultant shall maintain insurance as described in this section and shall require all of its subcontractors, consultants, and other agents to do the same. Approval of the insurance by the City shall not relieve or decrease any liability of Consultant Any requirement for insurance to be maintained after completion of the work shall survive this Agreement.

12.2. **Documentation of Insurance.** The City will not execute this agreement until it has received a complete set of all required documentation of insurance coverage. However, failure to obtain the required documents prior to the work beginning shall not waive the Consultant's obligation to provide them. Consultant shall file with City:

- Certificate of Insurance, indicating companies acceptable to City, with a Best's Rating of no less than A:VII showing. The Certificate of Insurance must include the following reference: Interim Accounting-Manager-Controller.
- Documentation of Best's rating acceptable to the City.
- Original endorsements effecting coverage for all policies required by this Agreement.

Docusign Envelope ID: 927345B5-C52C-49E4-A0AB-0C2790DCFE73

- City reserves the right to obtain a full certified copy of any Insurance policy and endorsements. Failure to exercise this right shall not constitute a waiver of the right to exercise later.

12.3. **Coverage Amounts.** Insurance coverage shall be at least in the following minimum amounts:

• Professional Liability Insurance:	$1,000,000 per occurrence, $2,000,000 aggregate
• General Liability:	
• General Aggregate:	$2,000,000
• Products Comp/Op Aggregate	$2,000,000
• Personal & Advertising Injury	$1,000,000
• Each Occurrence	$1,000,000
• Fire Damage (any one fire)	$ 100,000
• Medical Expense (any 1 person)	$ 10,000
• Workers' Compensation:	
• Workers' Compensation	Statutory Limits
• EL Each Accident	$1,000,000
• EL Disease - Policy Limit	$1,000,000
• EL Disease - Each Employee	$1,000,000
• Automobile Liability	
• Any vehicle, combined single limit	$1,000,000

Any available insurance proceeds broader than or in excess of the specified minimum insurance coverage requirements or limits shall be available to the additional insured. Furthermore, the requirements for coverage and limits shall be the greater of (1) the minimum coverage and limits specified in this Agreement, or (2) the broader coverage and maximum limits of coverage of any insurance policy or proceeds available to the named insured

12.4. **General Liability Insurance.** Commercial General Liability Insurance shall be no less broad than ISO form CG 00 01. Coverage must be on a standard Occurrence form. Claims-Made, modified, limited or restricted Occurrence forms are not acceptable.

12.5. **Worker's Compensation Insurance.** Consultant is aware of the provisions of Section 3700 of the Labor Code which requires every employer to carry Workers' Compensation (or to undertake equivalent self-insurance), and Consultant will comply with such provisions before commencing the performance of the work of this Agreement. If such insurance is underwritten by any agency other than the State Compensation Fund, such agency shall be a company authorized to do business in the State of California. If Consultant has no employees while performing services under

Docusign Envelope ID: 927345B5-C52C-49E4-A0AB-0C2790DCFE73

this Agreement, workers' compensation policy is not required, but Consultant shall execute a declaration that it has no employees.

12.6. **Professional Liability Insurance or Errors & Omissions Coverage.** The deductible or self-insured retention may not exceed $50,000. If the insurance is on a Claims-Made basis, the retroactive date shall be no later than the commencement of the work. Coverage shall be continued for two years after the completion of the work by one of the following: (1) renewal of the existing policy; (2) an extended reporting period endorsement; or (3) replacement insurance with a retroactive date no later than the commencement of the work under this Agreement.

12.7. **Claims-Made Policies.** If any of the required policies provide coverage on a claims-made basis the Retroactive Date must be shown and must be before the date of the contract or the beginning of contract work. Claims-Made Insurance must be maintained, and evidence of insurance must be provided for at least five (5) years after completion of the contract of work. If coverage is canceled or non-renewed and not replaced with another claims-made policy form with a Retroactive Date prior to the contract effective date, the Consultant must purchase "extended reporting" coverage for a minimum of five (5) years after completion of contract work.

12.8. **Additional Insured Endorsements.** The City, its City Council, Commissions, officers, and employees of South Pasadena must be endorsed as an additional insured for each policy required herein, other than Professional Errors and Omissions and Worker's Compensation, for liability arising out of ongoing and completed operations by or on behalf of the Consultant. Consultant's insurance policies shall be primary as respects any claims related to or as the result of the Consultant's work. Any insurance, pooled coverage or self-insurance maintained by the City, its elected or appointed officials, directors, officers, agents, employees, volunteers, or consultants shall be non-contributory. All endorsements shall be signed by a person authorized by the insurer to bind coverage on its behalf. General liability coverage can be provided using an endorsement to the Consultant's insurance at least as broad as ISO Form CG 20 10 11 85 or both CG 20 10 and CG 20 37.

12.9. **Failure to Maintain Coverage.** In the event any policy is canceled prior to the completion of the project and the Consultant does not furnish a new certificate of insurance prior to cancellation, City has the right, but not the duty, to obtain the required insurance and deduct the premium(s) from any amounts due the Consultant under this Agreement. Failure of the Consultant to maintain the insurance required by this Agreement, or to comply with any of the requirements of this section, shall constitute a material breach of this Agreement.

12.10. **Notices.** Contractor shall provide immediate written notice if (1) any of the required insurance policies is terminated; (2) the limits of any of the required policies are reduced; (3) or the deductible or self-insured retention is increased. Consultant shall provide no less than 30 days' notice of any cancellation or material change to policies required by this Agreement. The consultant shall provide proof that cancelled or expired policies of insurance have been renewed or replaced with other policies

Docusign Envelope ID: 927345B5-C52C-49E4-A0AB-0C2790DCFE73

providing at least the same coverage. Such proof will be furnished at least two weeks prior to the expiration of the coverages. The name and address for Additional Insured Endorsements, Certificates of Insurance and Notices of Cancellation is City of South Pasadena, Attn: Tina Lopez, Human Resources & Risk Manager, South Pasadena, CA 91030.

12.11. **Consultant's Insurance Primary.** The insurance provided by Consultant, including all endorsements, shall be primary to any coverage available to City. Any insurance or self-insurance maintained by the City and/or its officers, employees, agents or volunteers, shall be in excess of Consultant's insurance and shall not contribute with it.

12.12. **Waiver of Subrogation.** Consultant hereby waives all rights of subrogation against the City. Consultant shall additionally waive such rights either by endorsement to each policy or provide proof of such waiver in the policy itself.

12.13. **Report of Claims to City.** Consultant shall report to the City, in addition to the Consultant's insurer, any and all insurance claims submitted to Consultant's insurer in connection with the services under this Agreement.

12.14. **Premium Payments and Deductibles.** Consultant must disclose all deductibles and self-insured retention amounts to the City. The City may require the Consultant to provide proof of ability to pay losses and related investigations, claim administration, and defense expenses within retention amounts. Ultimately, City must approve all such amounts prior to execution of this Agreement.

City has no obligation to pay any premiums, assessments, or deductibles under any policy required in this Agreement. Consultant shall be responsible for all premiums and deductibles in all of Consultant's insurance policies. The amount of deductibles for insurance coverage required herein are subject to City's approval.

12.15. **Duty to Defend and Indemnify.** Consultant's duties to defend and indemnify City under this Agreement shall not be limited by the foregoing insurance requirements and shall survive the expiration of this Agreement.

13. MUTUAL COOPERATION

13.1. **City Cooperation in Performance.** City shall provide Consultant with all pertinent data, documents and other requested information as is reasonably available for the proper performance of Consultant's services under this Agreement.

13.2. **Consultant Cooperation in Defense of Claims.** If any claim or action is brought against City relating to Consultant's performance in connection with this Agreement,

Docusign Envelope ID: 927345B5-C52C-49E4-A0AB-0C2790DCFE73

Consultant shall render any reasonable assistance that City may require in the defense of that claim or action.

14. NOTICES

Any notices, bills, invoices, or reports required by this Agreement shall be deemed received on: (i) the day of delivery if delivered by hand, facsimile or overnight courier service during Consultant's and City's regular business hours; or (ii) on the third business day following deposit in the United States mail if delivered by mail, postage prepaid, to the addresses listed below (or to such other addresses as the parties may, from time to time, designate in writing).

If to City

Todd Hileman, City Manager
City of South Pasadena
1414 Mission Street
South Pasadena, CA 91030
Telephone: (626) 403-7212
Facsimile: (626) 403-7241

If to Consultant

Jonathon Davis
Director of Business Services
Lakeview Consulting

3855 Collins St.
West Sacramento, CA 95691
Telephone: (415) 794-5353

With courtesy copy to:

Roxanne Diaz
South Pasadena City Attorney
Richards Watson Gershon
350 South Grand Ave., 37th Floor
Telephone: (213) 626-8484

15. SURVIVING COVENANTS

The parties agree that the covenants contained in paragraph 5.11 (Records), paragraph 10.4 (Indemnification of CalPERS Determination), Section 11 (Indemnity), paragraph 12.8 (Claims-Made Policies), paragraph 13.2 (Consultant Cooperation in Defense of Claims), and paragraph 18.1 (Confidentiality) of this Agreement shall survive the expiration or termination of this Agreement, subject to the provisions and limitations of this Agreement and all otherwise applicable statutes of limitations and repose.

16. TERMINATION

16.1. **City Termination.** City may terminate this Agreement for any reason on fifteen (15) calendar days' written notice to Consultant. Consultant agrees to cease all work under this Agreement on or before the effective date of any notice of termination. All City

Docusign Envelope ID: 927345B5-C52C-49E4-A0AB-0C2790DCFE73

data, documents, objects, materials or other tangible things shall be returned to City upon the termination or expiration of this Agreement.

16.2. **Consultant Termination.** Consultant may terminate this Agreement for a material breach of this Agreement upon fifteen (15) days' notice.

16.3. **Compensation Following Termination.** Upon termination, Consultant shall be paid based on the work satisfactorily performed at the time of termination. In no event shall Consultant be entitled to receive more than the amount that would be paid to Consultant for the full performance of the services required by this Agreement. The City shall have the benefit of such work as may have been completed up to the time of such termination.

16.4. **Remedies.** City retains any and all available legal and equitable remedies for Consultant's breach of this Agreement.

17. INTERPRETATION OF AGREEMENT

17.1. **Governing Law.** This Agreement shall be governed and construed in accordance with the laws of the State of California.

17.2. **Integration of Exhibits.** All documents referenced as exhibits in this Agreement are hereby incorporated into this Agreement. In the event of any material discrepancy between the express provisions of this Agreement and the provisions of any document incorporated herein by reference, the provisions of this Agreement shall prevail. This instrument contains the entire Agreement between City and Consultant with respect to the transactions contemplated herein. No other prior oral or written agreements are binding upon the parties. Amendments hereto or deviations here from shall be effective and binding only if made in writing and executed on by City and Consultant.

17.3. **Headings.** The headings and captions appearing at the commencement of the sections hereof, and in any paragraph thereof, are descriptive only and for convenience in reference to this Agreement. Should there be any conflict between such heading, and the section or paragraph thereof at the head of which it appears, the language of the section or paragraph shall control and govern in the construction of this Agreement.

17.4. **Pronouns.** Masculine or feminine pronouns shall be substituted for the neuter form and vice versa, and the plural shall be substituted for the singular form and vice versa, in any place or places herein in which the context requires such substitution(s).

17.5. **Severability.** If any term or provision of this Agreement or the application thereof to any person or circumstance shall, to any extent, be invalid or unenforceable, then such term or provision shall be amended to, and solely to the extent necessary to, cure such invalidity or unenforceability, and shall be enforceable in its amended form. In such event, the remainder of this Agreement, or the application of such term or provision to persons or circumstances other than those as to which it is held invalid or

Docusign Envelope ID: 927345B5-C52C-49E4-A0AB-0C2790DCFE73

unenforceable, shall not be affected, and each term and provision of this Agreement shall be valid and be enforced to the fullest extent permitted by law.

17.6. **No Presumption Against Drafter.** Each party had an opportunity to consult with an attorney in reviewing and drafting this agreement. Any uncertainty or ambiguity shall not be construed for or against any party based on attribution of drafting to any party.

18. GENERAL PROVISIONS

18.1. **Confidentiality.** All data, documents, discussion, or other information developed or received by the Consultant for performance of this Agreement are deemed confidential and Consultant shall not disclose it without prior written consent by City. The City shall grant such consent if disclosure is legally required. All City data shall be returned to City upon the termination or expiration of this Agreement.

18.2. **Conflicts of Interest.** Consultant maintains and warrants that it has not employed nor retained any company or person, other than a bona fide employee working solely for Consultant, to solicit or secure this Agreement. Further, Consultant warrants that it has not paid, nor has it agreed to pay any company or person, other than a bona fide employee working solely for Consultant, any fee, commission, percentage, brokerage fee, gift or other consideration contingent upon or resulting from the award or making of this Agreement. The consultant further agrees to file, or shall cause its employees or subcontractor to file, a Statement of Economic Interest with the City's Filing Officer if required under state law in the performance of the services. For breach or violation of this warranty, City shall have the right to rescind this Agreement without liability. For the term of this Agreement, no member, officer, or employee of City, during the term of his or her service with City, shall have any direct interest in this Agreement, or obtain any present or anticipated material benefit arising therefrom.

18.3. **Non-assignment.** Consultant shall not delegate, transfer, subcontract or assign its duties or rights hereunder, either in whole or in part, without City's prior written consent, and any attempt to do so shall be void and of no effect. City shall not be obligated or liable under this Agreement to any party other than Consultant.

18.4. **Binding on Successors.** This Agreement shall be binding on the successors and assigns of the parties.

18.5. **No Third-Party Beneficiaries.** Except as expressly stated herein, there is no intended third-party beneficiary of any right or obligation assumed by the parties.

18.6. **Time of the Essence.** Time is of the essence for each and every provision of this Agreement.

Docusign Envelope ID: 927345B5-C52C-49E4-A0AB-0C2790DCFE73

18.7. **Non-Discrimination.** Consultant shall not discriminate against any employee or applicant for employment because of race, sex (including pregnancy, childbirth, or related medical condition), creed, national origin, color, disability as defined by law, disabled veteran status, Vietnam veteran status, religion, age (40 and above), medical condition (cancer-related), marital status, ancestry, or sexual orientation. Employment actions to which this provision applies shall include, but not be limited to, the following: employment, upgrading, demotion, or transfer; recruitment or recruitment advertising; layoff or termination; rates of pay or other forms of compensation; or in terms, conditions or privileges of employment, and selection for training. The consultant agrees to post in conspicuous places, available to employees and applicants for employment, the provisions of this nondiscrimination clause.

18.8. **Waiver.** No provision, covenant, or condition of this Agreement shall be deemed to have been waived by City or Consultant unless in writing signed by one authorized to bind the party asserted to have consented to the waiver. The waiver by City or Consultant of any breach of any provision, covenant, or condition of this Agreement shall not be deemed to be a waiver of any subsequent breach of the same or any other provision, covenant, or condition.

18.9. **Excused Failure to Perform.** Consultant shall not be liable for any failure to perform if Consultant presents acceptable evidence, in City's sole judgment, that such failure was due to causes beyond the control and without the fault or negligence of Consultant.

18.10. **Remedies Non-Exclusive.** Each right, power and remedy provided for herein or now or hereafter existing at law, in equity, by statute, or otherwise shall be cumulative and shall be in addition to every other right, power, or remedy provided for herein or now or hereafter existing at law, in equity, by statute, or otherwise. The exercise, the commencement of the exercise, or the forbearance from the exercise by any party of any one or more of such rights, powers or remedies shall not preclude the simultaneous or later exercise by such party of any or all of such other rights, powers or remedies.

18.11. **Attorneys' Fees.** If legal action shall be necessary to enforce any term, covenant or condition contained in this Agreement, the prevailing party shall be entitled to an award of reasonable attorneys' fees and costs expended in the action.

18.12. **Venue.** The venue for any litigation shall be Los Angeles County, California and Consultant hereby consents to jurisdiction in Los Angeles County for purposes of resolving any dispute or enforcing any obligation arising under this Agreement.

TO EFFECTUATE THIS AGREEMENT, the parties have caused their duly authorized representatives to execute this Agreement on the dates set forth below.

SIGNATURES ON THE FOLLOWING PAGE

Docusign Envelope ID: 927345B5-C52C-49E4-A0AB-0C2790DCFE73

"City"
City of South Pasadena

By: _____
Signature

Printed: Todd Hileman

Title: City Manager

Date: 5/19/2025

"Consultant"
Lakeview Consulting, LLC.

By: _____
Signature

Printed: Jonathon Davis

Title: Director of Business Services

Date: May 14, 2025

Attest:

By: DocuSigned by: Mark Perez 8C28A8A8EFB14A7...
Mark Perez
Deputy City Clerk

Date: 5/19/2025

Approved as to form:

By: DocuSigned by: Roxanne Diaz A7800E5CA8A241F...
Roxanne Diaz, City Attorney

Date: 5/19/2025

Docusign Envelope ID: 927345B5-C52C-49E4-A0AB-0C2790DCFE73

Docusign Envelope ID: 927345B5-C52C-49E4-A0AB-0C2790DCFE73

Exhibit A

Scope of Services

Serve as and fulfill the duties of the Interim Accounting Manager-Controller with emphasis on timely completion of the FY2024-25 journal entries, bank reconciliation and year-end close, lead the Book of Fees update study, and oversee the sewer and water rate studies. This position will have oversight of assigned lower-level staff during the absence of the primary Finance supervisor.

All services shall be provided onsite. Remote work may be scheduled in advance with approval of the City; the City works on a 4/10 workweek schedule (Monday-Thursday, 10 hours per day). Consultant may work less than 40 hours per week depending on the workload.

Docusign Envelope ID: 927345B5-C52C-49E4-A0AB-0C2790DCFE73

Exhibit B

Fee Schedule

Billable hourly rate of $150 per hour for offsite work and/or $200 per hour for onsite work (travel expenses included in the onsite rate).

City Council Agenda Report

ITEM NO. 18

DATE: June 18, 2025

FROM: Todd Hileman, City Manager

PREPARED BY: William Castrillon, Budget and Purchasing Manager

SUBJECT: **CONSIDER THE ADOPTION OF A RESOLUTION APPROVING A NEW FUND BALANCE POLICY IN ACCORDANCE WITH GOVERNMENTAL ACCOUNTING STANDARDS BOARD STATEMENT NO. 54**

Recommendation

It is recommended that the City Council review and adopt the resolution approving a new Fund Balance Policy in accordance with Governmental Accounting Standards Board Statement No. 54

Executive Summary

This Fund Balance Policy establishes guidelines and procedures for allocating and reporting fund balance in the financial statements in accordance with Governmental Accounting Standards Board (GASB) Statement No. 54, Fund Balance Reporting and Governmental Fund Type Definitions. Additionally, the policy aims to establish a minimum level at which fund balance is to be maintained to ensure long-term fiscal stability by mitigating the economic and operational disruptions caused by unanticipated circumstances and events.

Background

The City currently has a Fund Balance Policy for the General Fund as follows:

General Fund Reserves:

General Fund Reserves are described as:

- Unassigned Fund Balance - These reserves are in spendable form and may become either restricted, committed, or assigned. The City strives to attain a General Fund unrestricted fund balance equal to a minimum 30% of General Fund revenues at year end.
- Assigned Fund Balance – These reserves are set aside or earmarked for particular purposes, and the authority to designate these reserves can be delegated and may take less formal action to limit how the reserves are used.
- Restricted Fund Balance – These reserves are subject to restrictions that are legally enforceable by outside parties, such as bondholders.
- Committed Fund Balance – These reserves are designated by the City Council, and are designated for specific purposes, through formal action.

Committed balances can be modified by the City Council taking formal action. Committed (Designated) Reserves shall be reviewed and designated annually by the City Council prior to Budget adoption. Upon designation of a reserve for a specific purpose, the Council will ensure the following:

- The purpose of the reserve will be specified at the time of designation.
- The City Council will also identify whether the designation is a one-time designation or whether an amount specified by the City Council will be added to the designated reserve on an annual basis.
- Nothing limits the City Council's authority to un-designate, or re-designate any General Fund Designated Reserve for another governmental purpose, pursuant to formal City Council action

Analysis
The City currently references General Fund reserves within its broader Budget Policy. However, a standalone Fund Balance Policy aligned with GASB 54 is necessary to redefine fund balance classifications and include formal policies for committed and assigned fund balances. Additionally, adoption of a policy brings in best practices and financial transparency.

This policy also will provide guidance to:

- The minimum unassigned fund balance is 25% of General Fund budgeted operating revenues for the upcoming year. The 25% (three months) supports operations during the three-month lull in property tax disbursements and is above GFOA's two-month minimum (16.7%)
- Committed to Declared Disasters & Emergencies is triggered by the City Council resolution declaring an emergency and set as a minimum of $2,000,000
- Committed to Economic Contingency is triggered by a 10% drop in sales or utility tax (key revenue sources that are more volatile) and set as a minimum of $1,000,000
- Capital Appropriations accounts for the unspent CIP appropriate by the City Council and will vary.

Fiscal Impact
The proposed change will align the policy with GASB 54 and reduce the policy for the General Fund from 30% to 25% and will provide greater clarity on how the reserves will be held. No direct fiscal cost to implementation of this policy will be incurred other than staff time to reclassify balances as proposed.

Attachment:
Attachment No. 1 - Proposed Resolution

RESOLUTION NO.

A RESOLUTION OF THE CITY COUNCIL OF THE CITY OF SOUTH PASADENA, CALIFORNIA APPROVING THE FUND BALANCE POLICY IN ACCORDANCE WITH GOVERNMENTAL ACCOUNTING STANDARDS BOARD STATEMENT NO. 54

WHEREAS, the Governmental Accounting Standards Board ("GASB") issued Statement No. 54 - Fund Balance Reporting and Governmental Fund Type Definitions, which changes the terminology used for fund balance reporting on balance sheets of governmental funds;

WHEREAS, the City of South Pasadena desires to adopt a "Fund Balance Policy" that complies with GASB Statement No. 54 as set forth in Exhibit A to this Resolution ("Fund Balance Policy");

WHEREAS, the Fund Balance Policy aims to establish a minimum level at which fund balance is to be maintained to ensure long-term fiscal stability by mitigating the economic and operational disruptions caused by unanticipated circumstances and events;

WHEREAS, the Fund Balance Policy focuses on the unassigned, committed, and assigned fund balances categories and aligns with GASB Statement No. 54;

WHEREAS, the Fund Balance Policy provides that the City Council may commit funds for specific purposes by taking formal action and when such action is taken, these committed amounts cannot be used for any other purpose unless the City Council removes or changes the specific use through the same formal action that established the commitment;

WHEREAS, the Fund Balance Policy delegates to the City Manager the authority to assign unrestricted (assigned or unassigned) fund balance amounts where the City's intent is for those amounts to be used for specific purposes. This delegation of authority is for the sole purpose of reporting these amounts in the annual financial statements; and

WHEREAS, the City Council desires at this time and deems it to be in the best public interest to amend the current fund balance policy and establish a general fund target reserve balance of 25 percent of general fund operating revenues as set forth in the Fund Balance Policy.

NOW, THEREFORE, THE CITY COUNCIL OF THE CITY OF SOUTH PASADENA, CALIFORNIA, DOES HEREBY RESOLVE, DECLARE, DETERMINE AND ORDER AS FOLLOWS:

SECTION 1. The foregoing recitals are true and correct and incorporated herein by this reference as if set forth in full.

SECTION 2. The City Council hereby adopts the Fund Balance Policy as set forth in Exhibit "A," attached to this Resolution and incorporated herein by reference.

SECTION 3. Any previously adopted fund balance policy or any other policy on the same subject as set forth in Exhibit A, whether informally or formally adopted, by the City Council, or any officer or department head of the City, is hereby repealed in their entirety and shall be superseded by the Fund Balance Policy contained herein.

SECTION 4. This Resolution shall become effective immediately upon its adoption.

SECTION 5. The City Clerk shall certify to the adoption of this resolution.

PASSED, APPROVED AND ADOPTED on this 18th day of June, 2025.

_____
Janet Braun, Mayor

ATTEST:

_____
Hector Gomez, Chief City Clerk

APPROVED AS TO FORM:

_____
Roxanne Diaz, City Attorney

State of California)
County of Los Angeles)
City of South Pasadena)

I HEREBY CERTIFY the foregoing Resolution was duly adopted by the City Council of the City of South Pasadena, California, at a regular City Council Meeting held on the 18th day of June, 2025, by the following vote:

AYES:

NOES:

ABSENT:

ABSTAIN:

_____
Hector Gomez, Chief City Clerk

EXHIBIT A

FUND BALANCE POLICY

FUND BALANCE POLICY

Purpose

This Fund Balance Policy establishes guidelines and procedures for allocating and reporting fund balance in the financial statements in accordance with Governmental Accounting Standards Board (GASB) Statement No. 54, Fund Balance Reporting and Governmental Fund Type Definitions. Additionally, the policy aims to establish a minimum level at which fund balance is to be maintained to ensure long-term fiscal stability by mitigating the economic and operational disruptions caused by unanticipated circumstances and events.

Fund Balance Classifications

Fund balance consists of nonspendable, restricted, committed, assigned and unassigned funds.

- Nonspendable fund balance includes amounts that cannot be spent because they are either not in spendable form (such as prepaids or inventory) or legally or contractually required to be maintained intact (such as endowments).
- Restricted fund balance includes amounts that can be spent only for specific purposes specified by constitution, external resource providers, or through enabling legislation.
- Committed fund balance includes amounts that may be used only for specific purposes as determined by formal action of the City Council, such as adoption of a resolution or ordinance. These constraints are self-imposed by the governing body and can only be modified or removed by the same level of formal action that established them.
- Assigned fund balance includes amounts that are designated or expressed by the City Council, but does not require a formal action like a resolution or ordinance. The City Council delegates the responsibility to establish, modify, or rescind a fund balance assignment to the City Manager.
- Unassigned fund balance includes the residual balance for the City's General Fund and includes all spendable amounts not contained in other classifications.

Order of Spending

In order to preserve maximum flexibility, when an expenditure is incurred for purposes for which both restricted and unrestricted fund balance is available, it is presumed that restricted funds are spent first.

Similarly, when an expenditure is incurred for purposes for which amounts in any unrestricted fund balances could be used, it is presumed that the committed amounts are spent first, then the assigned amounts, then the unassigned amounts.

Upon recommendation of the City Manager or the Finance Director, the City Council may authorize a different order of spending in specific cases.

Fund Balance Targets

This policy focuses on the unassigned, committed, and assigned fund balance categories since nonspendable and restricted Fund Balance are not addressed due to the nature of their restrictions.

Minimum Unassigned Fund Balance Requirement: The City shall maintain an unassigned fund balance of no less than three months (approximately 25%) of budgeted operating revenues in the upcoming fiscal year. This serves to mitigate revenue volatility, ensure liquidity, and sustain uninterrupted service delivery during periods when property taxes are not collected.

Committed Fund Balance: Committed fund balance shall be established by formal action of the City Council and may be used only for their designated purpose. The following categories of committed fund balance are established:

- Declared Disasters and Emergency – This amount is committed for declared disasters or emergencies that threaten public health and safety of the City, such as earthquakes, major unanticipated infrastructure failures and terrorist events. This may only be utilized by resolution of the City Council declaring a disaster or emergency. The minimum amount shall be set at $2,000,000.
- Economic Contingency – This amount is committed for periods of economic instability causing a projected decline of 10% or more in sales tax and utility users tax. The minimum amount shall be set at $1,000,000.
- Capital Projects – Appropriations approved in the annual Capital Improvement Program that remain unspent at the end of the fiscal year.

Assigned Fund Balance: The City Council delegates the authority to assign fund balance to the City Manager, for intended specific purposes. The following assignments are established and may be modified and amounts determined by the City Manager as deemed appropriate.

- Public Building and Infrastructure Replacement/Maintenance – Assigned for future building and infrastructure replacement and maintenance projects
- Legal Contingency – Assigned for legal costs based on ongoing litigation.
- Compensated Absences - assigned for unused vacation and other leave hours earned by City employees at the employees' hourly rate that are due at the end of each fiscal year.

Excess Fund Balance: If unassigned fund balance exceeds the minimum fund balance policy amount, the surplus may be considered for:

- One-time capital investments
- Contributions to reduce unfunded liabilities
- Additional assigned or committed fund balances

Recurring operational expenses shall not be funded with one-time surplus balances.

Replenishment of Minimum Unassigned Fund Balance: If unassigned fund balance falls below the Minimum Unassigned Fund Balance Requirement, the City shall adopt a plan within 90 days to restore the balance within one to three fiscal years.

Annual Review and Reporting

Prior to completion of the City's Annual Comprehensive Financial Report, the Finance Department shall prepare a Fund Balance Summary Report. Additionally, the City Council shall review and affirm or amend this policy annually during the budget adoption process.

City Council Agenda Report

ITEM NO. 19

DATE: June 18, 2025

FROM: Todd Hileman, City Manager

PREPARED BY: Cathy Billings, Library Director

SUBJECT: **CONSIDERATION OF APPROVAL OF AN AMENDMENT TO THE AGREEMENT WITH CALIFORNIA METRO PATROL FOR SECURITY GUARD SERVICES TO EXTEND THE AGREEMENT TERM TO SEPTEMBER 30, 2025**

Recommendation

It is recommended that the City Council consider approving the amendment to the agreement with California Metro Patrol for security guard services to extend the agreement term to September 30, 2025.

Executive Summary

The City Council is requested to consider approving an amendment to the Agreement with California Metro Patrol ("CMP") that would extend the term by three months, to September 30, 2025. The City first entered into the Agreement with CMP in March 2023, and two subsequent amendments extended the term of the Agreement to June 30, 2025 and increased the aggregate total of the Agreement to $218,196.60. Funds appropriated in Fiscal Year 2024-2025 are adequate to cover costs if the Agreement is extended to September 30, 2025. No additional funding is being requested with this Amendment.

Background

In March 2023, the City of South Pasadena entered into an agreement with California Metro Patrol to initiate a pilot program aimed at enhancing security at City Hall. The concierge security services provided by California Metro Patrol were designed to assist with managing foot traffic, improving service efficiency, and enhancing customer interactions. These services also contributed to a heightened sense of safety for staff and visitors at the facility.

In October 2024 the City Council approved shifting the 40 hours per week of concierge security services from City Hall to the Library, where the need for assistance with security and customer behavior management was greater. Guards began reporting for duty in January 2025, and have been providing services for 40 of the 58 hours per week that the Library is open to the public.

The proposed amendment will extend the agreement and provision of security services at the Library through September 30, 2025. The funds appropriated in Fiscal Year 2024-2025 for California Metro Patrol's concierge security services are adequate to cover the expenses associated with extending the term of the agreement through September 30, 2025.

The Library's proposed budget for Fiscal Year 2025-2026 includes a request for funding for continued concierge security services. If that request is approved in the Fiscal Year 2025-2026 budget that the City Council adopts, the City would seek to enter into a new agreement for concierge security services at the Library consistent with the allocated funding, effective October 1, 2025.

Analysis
The partnership with California Metro Patrol has proven highly beneficial for the City. When located at City Hall, concierge security services enhanced the efficiency of City operations by allowing staff to focus on their core responsibilities rather than redirecting visitors or handling security-related incidents.

Since January, the Library has experienced the same benefits. Both quantitatively and anecdotally, the services have had a significant positive impact. During the hours the guards are on duty the number of incidents taking place has declined, staff are relieved of a portion of the burden of managing customer behavior, which has improved their well-being and morale, and in general the Library is a more welcoming public space.

The concierge security service is part of a multi-pronged approach to addressing security and safety at the Library. Other efforts include the implementation of Savannah, an incident tracking and management software designed specifically for libraries, and facility improvements that are in progress, like the installation of an electronic key card access system and security cameras.

California Metro Patrol's experience working in similar settings with similar clientele, including the Pasadena School District, the City of Azusa Public Library, and the Pasadena Salvation Army, make them a good partner for the City and the Library.

California Metro Patrol has been a responsive and reliable partner and has been able to understand the unique needs of a public library, and to tailor services accordingly. The proposed Amendment will allow for continued collaboration and continuity in the period between the end of Fiscal Year 2024-2025 and the adoption by the City Council of a Fiscal Year 2025-2026 budget.

Fiscal Impact
The total contract amount is $218,196.60, and no appropriation is requested at this time for this amendment. The previously approved increase to the contract provides sufficient funding to cover the projected expenses of concierge security services at the Library over the three months (July, August, September) that this Amendment will add to the term of the Agreement.

A request for funding to continue security guard services at the Library after September 30, 2025 will be included in the proposed Fiscal Year 2025-2026 budget, for the City Council's consideration.

Attachment:
Attachment 1 - Proposed Amendment to California Metro Patrol Agreement
Attachment 2 - Second Amendment to California Metro Patrol Agreement (October 2, 2024)
Attachment 3 - First Amendment to California Metro Patrol Agreement (October 4, 2023)
Attachment 4 - Original Agreement with California Metro Patrol (March 27, 2023)

AMENDMENT TO
AGREEMENT WITH CALIFORNIA METRO PATROL FOR SECURITY GUARD CONCIERGE SERVICES

THIS AMENDMENT ("Amendment") is entered into as of June 18, 2025 by and between the CITY OF SOUTH PASADENA ("CITY") and CALIFORNIA METRO PATROL. ("VENDOR").

RECITALS

WHEREAS, on March 27, 2023, the CITY and VENDOR entered into an Agreement for SECURITY GUARD CONCIERGE SERVICES ("Agreement") for VENDOR to perform SECURITY GUARD CONCIERGE services for the City; and

WHEREAS, the original Agreement was in the amount of $23,021.60; and

WHEREAS, on October 4, 2023 Amendment No. 1 was approved by the City Council to increase the compensation in an amount not to exceed $84,600 and extend the term for up to an additional twelve months, as needed, to June 30, 2024, bringing the aggregate total of Agreement and Amendments to $107,621.60; and

WHEREAS, on October 2, 2024 Amendment No. 2 was approved by the City Council to transfer the concierge security services to the Library, consolidate services being rendered to the Community Development Department, extend the term to June 30, 2025, and increase the compensation in an amount not to exceed $110,575, bringing the aggregate total of Agreement and Amendments to $218,196.60; and

WHEREAS, the City desires to execute a third amendment to the agreement to extend the term to September 30, 2025, with no change to the compensation or the aggregate total of Agreement and Amendments.

NOW THEREFORE, THE CITY AND THE VENDOR AGREE AS FOLLOWS:

Section 1. The term of the Agreement as described on the first page of the Agreement is hereby revised as follows: "Service Start Date": March 27, 2023 through September 30, 2025, as needed and determined by the City ("Term")."

Section 2. Except as expressly modified by this Amendment, all other provisions of the Agreement shall remain in full force and effect. In the event of a conflict between the provisions of this Amendment and the provisions of the Agreement, the provisions of this Amendment shall control.

"City" City of South Pasadena	"Vendor" California Metro Patrol
By: _____	By: _____
Date: _____	Date: _____
Printed: Todd Hileman	Printed: _____
Title: City Manager	Title: _____

Attest:

By: _____
Hector Gomez, Chief City Clerk

Approved as to form:

By: _____
Roxanne M. Diaz, City Attorney

Docusign Envelope ID: A9592EBE-D16B-4561-9496-8C46DA00CA3B

AMENDMENT TO AGREEMENT WITH CALIFORNIA METRO PATROL FOR SECURITY GUARD CONCIERGE SERVICES

THIS AMENDMENT ("Amendment") is entered into as of October 2nd, 2024 by and between the CITY OF SOUTH PASADENA ("CITY") and CALIFORNIA METRO PATROL. ("VENDOR").

RECITALS

WHEREAS, on March 27, 2023, the CITY and VENDOR entered into an Agreement for SECURITY GUARD CONCIERGE SERVICES ("Agreement") for VENDOR to perform SECURITY GUARD CONCIERGE services for the City; and

WHEREAS, the original Agreement was in the amount of $23,021.60; and

WHEREAS, on October 4, 2023 Amendment No. 1 was approved by the City Council to increase the compensation in an amount not to exceed of $84,600 and extend the term for up to an additional twelve months, as needed, to June 30, 2024, bringing the aggregate total of Agreement and Amendments a sum total of $107,621.60; and

WHEREAS, the City desires to execute an Amendment to increase the contract in an amount not to exceed $110,575, consolidating services being rendered to the Community Development Department, and transferring the current concierge security services being rendered at City Hall, to the Library and extend the term to June 30, 2025. The aggregate total of Agreement and this Amendment is a sum total of $218,196.

NOW THEREFORE, THE CITY AND THE VENDOR AGREE AS FOLLOWS:

Section 1. The term of the Agreement as described on the first page of the Agreement is hereby revised as follows: "Service Start Date": March 27, 2023 through June 30, 2025, as needed and determined by the City ("Term")."

Section 2. The Agreement is amended to incorporate the following provision: The City shall compensate Vendor for the services provided to the City at the hourly rate set forth in the Agreement. However, in no event shall Vendor be paid more than $218,196 during the Term for the services.

Section 3. The Agreement is amended to incorporate the following provision: The City may terminate this Agreement at any time for any reason or no reason after giving written notice to Vendor at least ten calendar days before the termination is to be effective. Vendor shall cease all work under this Agreement on the effective date of

Docusign Envelope ID: A9592EBE-D16B-4561-9496-8C46DA00CA3B

termination specified in the notice. In the event of termination by the City, due to no fault of Vendor, Vendor shall be paid based on the services performed through the date of termination. Vendor shall have no other claim against by the City by reason of such termination.

Section 4. Except as expressly modified by this Amendment, all other provisions of the Agreement shall remain in full force and effect. In the event of a conflict between the provisions of this Amendment and the provisions of the Agreement, the provisions of this Amendment shall control.

"City"
City of South Pasadena

Signed by:
By: Donald E. Penman 11/4/2024
C9C235A36ABD40C...
Signature

Printed: Donald E. Penman

Title: Interim City Manager

"Vendor"
California Metro Patrol

DocuSigned by:
By: Joseph A. Perez 10/31/2024
08E950CBC061498...
Signature

Printed: Joseph A. Perez

Title: Operations Chief

Attest:

DocuSigned by:
By: Mark Perez 11/4/2024
8C28A8A8EFB14A7...
Mark Perez , Deputy City Clerk

Approved as to form:

DocuSigned by:
By: Roxanne M. Diaz 11/4/2024
A7800E5CA8A241F...
Roxanne M. Diaz, City Attorney

Docusign Envelope ID: A9592EBE-D16B-4561-9496-8C46DA00CA3B

AMENDMENT TO AGREEMENT WITH CALIFORNIA METRO PATROL FOR SECURITY GUARD CONCIERGE SERVICES

THIS AMENDMENT ("Amendment") is entered into as of June 30, 2023 by and between the CITY OF SOUTH PASADENA ("CITY") and CALIFORNIA METRO PATROL. ("VENDOR").

RECITALS

WHEREAS, on March 27, 2023, the CITY and VENDOR entered into an Agreement for SECURITY GUARD CONCIERGE SERVICES ("Agreement") for VENDOR to perform SECURITY GUARD CONCIERGE services for the City; and

WHEREAS, the original Agreement was in the amount of $23,021.60; and

WHEREAS, the CITY desires to execute an amendment to increase the compensation in an amount not to exceed of $84,600 and extend the term for up to an additional twelve months, as needed, to June 30, 2024. The aggregate total of Agreement and this Amendments is a sum total of $107,621.60; and

NOW THEREFORE, THE CITY AND THE VENDOR AGREE AS FOLLOWS:

Section 1. The term of the Agreement as described on the first page of the Agreement is hereby revised as follows: "Service Start Date": March 27, 2023 through June 30, 2024, as needed and determined by the City ("Term")."

Section 2. The Agreement is amended to incorporate the following provision: The City shall compensate Vendor for the services provided to the City at the hourly rate set forth in the Agreement. However, in no event shall Vendor be paid more than $107,621 during the Term for the services.

Section 3. The Agreement is amended to incorporate the following provision: The City may terminate this Agreement at any time for any reason or no reason after giving written notice to Vendor at least ten calendar days before the termination is to be effective. Vendor shall cease all work under this Agreement on the effective date of termination specified in the notice. In the event of termination by the City, due to no fault of Vendor, Vendor shall be paid based on the services performed through the date of termination. Vendor shall have no other claim against by the City by reason of such termination.

Section 4. Except as expressly modified by this Amendment, all other provisions of the Agreement shall remain in full force and effect. In the event of a conflict between the provisions of this Amendment and the provisions of the Agreement, the provisions of this Amendment shall control.

Docusign Envelope ID: A9592EBE-D16B-4561-9496-8C46DA00CA3B

"City"
City of South Pasadena

By: DocuSigned by: Armine Chaparyan B6F60358A0F24D7... 10/12/2023
Signature

Printed: Arminé Chaparyan

Title: City Manager

"Vendor"
California Metro Patrol

By: DocuSigned by: Joseph A. Perez 88E050CBC061498...
Signature

Printed: Joseph A. Perez

Title: Operations Chief

Attest:

By: DocuSigned by: Mark Perez 8C28A8A8EEB14A7... 10/12/2023
Mark Perez , Deputy City Clerk

Approved as to form:

By: DocuSigned by: Roxanne Diaz A7800E5CA8A241F... 10/11/2023
Roxanne M. Diaz, City Attorney

DocuSign Envelope ID: 0BC1E947-B2A2-4491-BD21-63BA1FE1192E

METRO PATROL
1308 East Colorado Boulevard #588
Pasadena, California 91106
PPO 17588 - (888) 788 - 0813

SECURITY SERVICES AGREEMENT

THIS AGREEMENT is entered into as of this _ 27th _ day of _ MARCH _, _ 2023 _, by and between CALIFORNIA METRO PATROL & EMS, INC, DBA: CALIFORNIA METRO PRIVATE SECURITY PATROL, DBA: CALIFORNIA METRO PATROL, DBA: CMP (hereinafter "Service Provider") and: ACT # SPAS 1414 MS

Client: _____City of South Pasadena – City Hall _____	Contact: ___ Police – Front Desk (626) 403 – 7270 ___
Address: _____ 1414 Mission Street _____	___ City Hall Main Desk (626) 403 – 7230___
City: ___ *South Pasadena* ___ State: __ *California* __ Zip Code: __ *91030* __	Client/Billing e-mail: [Tamra Binns] _ tbinns@southpasadenaca.gov _

Service Start Date: _March 27st, 2023 thru June 30th, 2023_ CLIENT/Billing e-mail: _ dmegerdichian@southpasadenaca.gov _ [Domenica Megerdichian]

Type of Service:	Rate:	Coverage:
☒ Daily Patrol	_See Addendum_	CMP Officers assigned 4 Days a week as described in the ADDENDUM. Officers posted & visibility present at the FRONT ENTRY of CITY HALL as a Concierge for Greeting and Customer Service to work in Conjunction with Staff will assist in VERIFING Visitors when entering. Report or Address Crimes in Progress at the Property, remain visible & vigilant while assigned to ensure a safe & secure environment. Officers will be observant to unwanted persons Damaging/Entering/Burglarizing the property.
☐ RAPID ALARM Response	_FREE - San Marino_	
☒ Posted UN-ARMED Officer IF Needed for Special Events or Posted ARMED Officer	_See Addendum_ $ Monthly and/or Hourly rate is based on NEW TEMPORARY Services.	
☐ NO Trespassing Signs		
☒ Property Walk		

*** Other Terms: CMP & City of South Pasadena will evaluate this Agreement for renewal of reserves with option of reoccurring services.

**** California Metro Patrol Officers that are Registered and Qualified for "Armed" service with California Bureau of Security and Investigative Services ****

Client has requested CMP to provide & CMP agrees to provide services checked above & described herein in accordance with the terms of this agreement.

1. PAYMENT AND TERMS

A. THE TOTAL MONTHLY FEE FOR SERVICES WILL BE BILLED AND PAYABLE TO: California Metro Patrol

☒ MONTHLY – Billed 10 days PRIOR to END of Period (*For Services*) Invoicing e-mail: accounting@californiametropatrol.com

☐ _____ ALARM COMPANY – For Other Alarm Companies – Billed at Additional $ 185.00/Month.

☐ RAPID ALARM Response – INCLUDED FREE clients with SAN MARINO SECURITY with CMP Patrol Services __

CLIENT HAS REQUESTED BILLING AND PAYABLE TERMS CHECKED ABOVE AND DESCRIBED HEREIN IN ACCORDANCE WITH THE TERMS OF THIS AGREEMENT. PAYMENT IS DUE UPON RECEIPT OF AN INVOICE. IN ADDITION, THE CLIENT WILL PAY THE PRO-RATE FEE FOR THE MONTH IN WHICH SERVICE BEGINS.

B. THE ORIGINAL TERM OF THIS AGREEMENT FOR SERVICES SHALL BE THREE (3) MONTHS AND NO RENEW FOR ANY ADDITIONAL PERIOD UNLESS EITHER PARTY GIVES THE OTHER ATLEAST THIRTY (30) DAYS PRIOR WRITTEN NOTICE OF ITS INTENTION TO CONTINUE THE TEMPORARY AGREEMENT. SERVICE PROVIDER MAY INCREASE THE SERVICE FEE AT ANY TIME AFTER THE ORIGINAL TERM OF THIS AGREEMENT BY GIVING THE CLIENT THIRTY (30) DAYS PRIOR WRITTEN NOTICE. IF CLIENT IS UNWILLING TO PAY THE INCREASED SERVICE FEE, CLIENT MAY TERMINATE THIS AGREEMENT BY GIVING SERVICE PROVIDER WRITTEN NOTICE WITHIN THIRTY (30) DAYS FROM THE EFFECTIVE DATE OF THE INCREASE. IF THE CLIENT GIVES THE SERVICE PROVIDER WRITTEN NOTICE TO CANCEL THIS AGREEMENT, CLIENT MUST OBTAIN WRITTEN CONFIRMATION OF RECEIPT OF CANCELLATION NOTICE FROM THE SERVICE PROVIDER IN ORDER FOR THE CANCELLATION OF THIS AGREEMENT TO TAKE EFFECT, IF CLIENT HAS MADE PAYMENTS FOR SERVICES IN ADVANCE TO SERVICE PROVIDER, SERVICE PROVIDER WILL REFUND ADVANCED PAYMENT TO CLIENT WITH THE PRO-RATA FEE FOR THE MONTH IN WHICH SERVICE ENDS. THIS REFUND WILL BE DUE WITHIN THIRTY (30) DAYS OF THE DATE OF CANCELLATION OF THIS AGREEMENT. THIS RATE & TERM IS A SPECIAL OFFERING BASED ON PROFESSIONAL RELATIONSHIP WITH CITY of SOUTH PASADENA & IS NOT TRANSFERRABLE.

GENERAL TERMS APPLICABLE TO ALL OPTIONS:

CLIENT ACKNOWLEDGES THAT THE SERVICE FEE IS BASED UPON EXISTING FEDERAL, STATE AND LOCAL TAXES AND CHARGES. SERVICE PROVIDER SHALL HAVE THE RIGHT, AT ANY TIME, TO INCREASE THE SERVICE FEE TO REFLECT ANY ADDITIONAL OR INCREASED TAXES, LICENSES, PERMITS OR FEES WHICH MAY BE CHARGED TO SERVICE PROVIDER BY ANY UTILITY OR GOVERNMENTAL AGENCY RELATING TO THE SERVICES PROVIDED HEREUNDER, AND CLIENT AGREES TO PAY THE SAME. SPECIAL SERVICES IS NOT INCLUDED IN THE MONTHLY FEE. THERE IS NO FINANCE CHARGE OF COST OF CREDIT ASSOCIATED WITH THIS AGREEMENT.

2. ACKNOWLEDGMENT; RECEIPT OF COPY: CLIENT ACKNOWLEDGES THAT PRIOR TO SIGNING THIS AGREEMENT, CLIENT RECEIVED, READ AND UNDERSTOOD A LEGIBLE EXACT AND COMPLETELY FILLED IN COPY OF THIS AGREEMENT.

3. SERVICE PROVIDER'S LIMITED LIABILITY: WE DO NOT REPRESENT OR WARRANT THAT THE SERVICE WILL PREVENT ANY LOSS BY BURGALRY, HOLDUP, FIRE OR OTHERWISE, OR THAT THE SERVICE WILL IN ALL CASES PROVIDE THE PROTECTION FOR WHICH IT IS INTENDED. YOU ACKNOWLDGE AND AGREE THAT (A) WE HAVE MADE NO REPRESENTATIONS OR WARRANTIES, EXPRESS OR IMPLIED AS TO THE SERVICE, NOR HAVE YOU RELIED ON ANY REPRESENTATIONS OR WARRANTIES, EXPRESS OR IMPLIED; (B) YOU ASSUME ALL RISK OF LOSS OR DAMAGE TO YOUR PREMISES OR TO THE CONTENTS EREOF, YOU ACKNOWLEDGE THAT YOU HAVE READ AND UNDERSTOOD ALL OF THIS AGREEMENT, PARTICULARLY PARAGRAPH 10 IN THE EVENT OF ANY LOSS OR DAMAGE TO YOU OR ANYONE ELSE.

ALL OF THE TERMS ON PAGE TWO AND ON ALL ATTACHMENTS ARE PART OF THIS AGREEMENT. READ THEM BEFORE SIGNING BELOW. YOU, THE CLIENT, MAY CANCEL THIS AGREEMENT AT ANY TIME, BY GIVING THIRTY DAYS WRITTEN NOTICE, EFFECTIVLY MAKING THIS AGREEMENT A MONTH TO MONTH AGREEMENT.

CALIFORNIA METRO PATROL & EMS, INC.	CLIENT
By: _____ Joseph Perez _____ Date; _3 - 21 - 2023_	By: Armenical Megerdichian for AC Date; _3 - 27 - 2023_
Printed Name: _ Joseph Perez _ Title: _ Operations Chief _	Printed Name: ___ ~~Armine' Chaparyan~~ ___ Title: _ City Manager __ Domenica Megerdichian, Deputy

THIS AGREEMENT WILL NOT BE BINDING UPON CALIFORNIA METRO PATROL & EMS, INC. UNTIL EITHER (1) SIGNED BY ONE OF CALIFORNIA METRO PATROL & EMS, INC'S OWNERS/MANAGERS, OR (2) CALIFORNIA METROL PATROL & EMS, INC. STARTS THE SERVICES. IN THE EVENT OF DISAPPROVAL, CALIFORNIA METRO PATROL & EMS, INC. SHALL ONLY BE OBLIGATED TO REFUND ANY PAYMENTS PREVIOUSLY MADE TO CALIFORNIA METRO PATROL & EMS, INC. AS AN ADVANCE AGAINST SERVICES DESIRED HEREUNDER.

4. **DESCRIPTION OF SERVICE:**
Client authorized Service Provider (if applicable) to enforce Client's property rules and regulations and to cause the arrest of any person or persons on or around Client's location who are unauthorized by Client to be on Client's property and to hold such person or persons until released by Client, his known representative or law enforcement. If Service Provider's personnel observe criminal activity or other threats to Client's premises, Service provider's personnel will take appropriate prudent action, and if Service Provider deems necessary Service Provider will notify the proper law enforcement, emergency personnel and/or the first available person on the Client's emergency call list. CLIENT UNDERSTANDS AND AGREES THAT SERVICE PROVIDERS PERSONNEL, INCLUDING BUT NOT LIMITED TO, PATROL OFFICERS AND DISPATCHERS DO NOT HAVE SPECIAL ARREST OR LAW ENFORCEMENT POWERS AND MAY ONLY ACT AS ORDINARY CITIZENS. Client hereby authorizes Service Provider to cause the tow of any unauthorized vehicles on or around client's premises. In the event that Service Provider should be requested or required to tow a vehicle, it is understood and agreed to, that Service Provider is to be held harmless, from any and all costs and actions surrounded by said tows. Client may request to increase coverage of services subscribed or decrease coverage, or subscribe to other or additional services Service Provider offers by verbal and or written notice under the terms of this Agreement. It is agreed to and understood that Service Provider may supply Client with written report, but Service Provider's failure to do so does not constitute a reduction in service or a breach hereunder. Client in no event shall make any deductions from invoices as a result of any security officer's failure to leave and provide reports. Client shall pay Service Provider at the rate of $65.00 per hour, with a minimum of four (4) hours, for any and all time spent by Service Provider or Service Provider's personnel in connection with any legal court action originated on the Client's location in connection with any assigned duties hereunder.

   A. **PATROL SERVICE:** Patrol service shall consist of uniformed Patrol Officers in marked Service Provider vehicles patrolling Client's premises by vehicle and or on foot on a random and or scheduled number of patrols basis. In the event a Patrol Officer(s) is required to be stationed at the location for more than sixty minutes, an hourly charge of $118.00 per hour **MAY APPLY**, with a minimum of two hours. The charge shall be due and payable upon Client's receipt of Service Provider's invoice for such charge. The Client and Service Provider agree that in the event of an emergency, or in the event a patrol officer is engaged at another location or incident, or in the event Service Provider may be short staffed, it may not be possible for Service Provider to provide the random and/or scheduled number of patrols on a given day. Client agrees to hold Service Provider harmless from any liability resulting therefrom. **ALL COSTS SUPERCEIDED BY: Posted ARMED Officer COST in ADDENDUM Page**.

   B. **RAPID ALARM RESPONSE:** If Client has elected to subscribe to patrol response service, Service Provider shall dispatch a Patrol Officer as a result of receiving a call from Client, persons authorized by Client (e.g., monitored alarm systems from third party providers) or others who have reason to believe that a crime is occurring or is about to occur on Client's premises. Service Provider **MAY CHARGE** Client for a response over their allotted amount and if in the event a Patrol Officer is required to be stationed at the location for more than sixty minutes, an hourly charge of $118.00 per hour **MAY APPLY** with a minimum of one (1) hour. The charge shall be due and payable upon Client's receipt of Service Provider's invoice for such charges. **ALL COSTS SUPERCEIDED BY: Posted ARMED Officer COST in ADDENDUM Page**.

   C. **RAPID ALARM SERVICE:** CMP will respond to the client's home alarm. CMP Officers will respond to client's premises on a requested dispatch responses. **CMP reserves the right to Not Respond and Revert the Alarm Response back to Local Law Enforcement for Alarm Response if the client fails to compensate EITHER Service Provider (CMP -or- Alarm Company)**. Client agrees to hold EITHER Service Provider harmless from any liability resulting therefrom. Testing Alarm/Response is prohibited unless there is ONE (1) Day prior notice to BOTH CMP and the clients alarm company. In the event that CMP Officers are required to maintain a presence at the location for more than thirty minutes, an hourly charge of $118.00 per hour **MAY APPLY**, with a minimum of one hour. The charge shall be due and payable upon client's receipt of Service Provider's invoice for such charge. Client and Service Provider agree that in the event of an emergency or in the event Service Provider's personnel is engaged monitoring another incident, or in the event Service Provider may be short staffed, it may not be possible for Service provider to provide the response. Client agrees to hold Service Provider harmless from any liability resulting therefrom. **ALL COSTS SUPERCEIDED BY: Posted ARMED Officer COST in ADDENDUM Page**.

   D. **POSTED OFFICER SERVICE: Posted Officer** service is agreed to upon Client's request to Service Provider. Posted Officer shall consist of uniformed Patrol/Standing Officers in marked uniform(s) of the Service Provider that will execute the above agreed to specifications, during the pre-arraigned shifts, and will remain on the premises as agreed. This service to be charged for prevailing agreed to rate. The charge shall be due and payable upon two-week Client's receipt of Service Provider's invoice for such charges.

5. **SERVICE PROVIDER'S DUTIES:** Patrol officers and dispatchers while on duty shall be completely outfitted with a uniform and all necessary equipment and all supplies necessary to accomplish the assigned duties as determined by Client and Service Provider. The services provided for by this Agreement shall be performed by qualified, efficient and dedicated personnel in strict accordance with the recognized and best practices and with the standards and special instructions issued by Client. All personnel are the sole responsibility of Service Provider and at all times subject to the direct supervision and control of Service Provider. Service provider will have the sole responsibility for paying all salaries and taxes and all other expenses related to all personnel in the employ of Service Provider.

6. **CLIENT'S DUTIES:** In the case of a Client with a System or Cameras, Client will instruct Client's employees, family members and other who may use the system or Cameras on its proper use. Client will obtain and keep in effect all permits and licenses that may be required for the installation and operation of the System or Cameras. Client will pay all usage fees imposed by any governmental agency. Client will provide an emergency call list which will include the name, telephone number and position of each person Service provider may call in the event Service Provider believes there is an emergency at Client's premises and other emergency information Service provider may request. Client will provide written notice of any changes in information such as Client's emergency call list, service instructions and procedures. Client agrees that Service Provider may provide the information in Client's call list to any governmental agency having jurisdiction over Service Provider.

   Client agrees that it will not either during the terms of this Agreement or for a period of two (2) years following the termination, hire or cause to be hired for its own employment any of the personnel of Service Provider who may or may not have performed services at any time in connection with the carrying out of the terms of this Agreement. It is further agreed that Service Provider is neither an employment agency nor a clearinghouse for people, and the personnel it furnishes are made possible only by a substantial investment in advertising, recruiting, testing and training its personnel. In consideration of the above mentioned time and expense invested in personnel, in the event Client hires or causes to be hired for its use and benefit any of Service Provider's personnel, Client agrees to pay Service Provider a replacement fee of three thousand five hundred ($3,500.00) dollars, or the actual costs incurred by Service Provider, according to proof, whichever is higher, for each and every employee.

7. **FALSE ALARMS:** Client agrees that Client or others using or having control over the System (including, but not limited to Client's alarm dealer or Monitoring Facility) will use it carefully so as to avoid causing false alarms. False alarms can be caused by severe weather or other forces beyond Service Provider's control. If Service Provider receives too many false alarms or dispatch requests where no emergency exists, Service Provider **MAY CHARGE** for or Cancel response services. If false alarm fines or penalties are charged to Client or Service Provider by any governmental agency, Client will pay the charge or repay Service Provider for the charge as the case may be.

8. **SUSPENSION OR CANCELLATION OF THIS AGREEMENT; DELINQUENCY CHARGE:** Client understands that Service Provider may stop or suspend services if, (a) severe weather, earthquake, natural disasters, or "Acts of God" affect the operation of Client's premises or damage Client's premises such that continuing service would be impractical, (b) Service Provider is unable to provide service because of some action or ruling by any governmental authority, (c) Service is terminated or suspended for any reason, (d) Client becomes a debtor in a bankruptcy proceeding, or Client does not pay the service fee, after Service Provider has given Client notice that Service Provider is cancelling service because of non-payment. Service Provider may charge a service re-establishment fee if service is suspended for non-payment. If Client fails to make any payment when due Service Provider may discontinue service, terminate this Agreement and recover all damages to which Service Provider is entitled including the value of the service performed and all amounts to Service Provider for the unexpired term of the Agreement. In addition, Service Provider may impose a late charge on all payment made more than thirty (30) days past due in the maximum amount permitted by California law.

9. **ASSIGNEES AND SUBCONTRACTORS:** Service Provider may not transfer or assign this Agreement to any other alarm, patrol or response company or financing institution without notice to Client. Client may not transfer this Agreement to someone else (including someone who purchases or rents Client's Premises) unless Service Provider pre-approves the transfer in writing. If Service Provider uses subcontractors to provide service, this Agreement and particularly paragraph 10 shall apply to them and the work they perform and protect them in the same manner as it applied to and protects Service Provider.

10. **SERVICE PROVIDER IS NOT AN INSURER; LIMITATION OF LIABILITY:** CLIENT UNDERSTANDS THAT (a) SERVICE PROVIDER IS NOT AN INSURER OF CLIENT'S PROPERTY OR THE PERSONAL SAFETY OF PERSONS IN CLIENT'S PREMISES, (b) THE AMOUNT CLIENT PAYS TO SERVICE PROVIDER IS BASED ONLY ON THE VALUE OF THE SERVICE THAT SERVICE PROVIDER IS PROVIDING HEREUNDER, (c) THE SERVICE THAT SERVICE PROVIDER MAY PROVIDE MAY NOT ALWAYS OPERATE PROPERLY FOR VARIOUS REASONS, (d) IT IS DIFFICULT TO DETERMINE IN ADVANCE THE VALUE OF CLIENT'S OR ANY OTHER PERSONS' PROPERTY THAT MIGHT BE LOST, STOLEN OR DESTROYED IF THE SERVICE FAILS TO OPERATE PROPERLY, (e) IT IS TO DETERMINE IN ADVANCE HOW FAST THE POLICE OR FIRE DEPARTMENT OR OTHERS WOULD RESPOND TO A REQUEST FOR HELP, (f) SERVICE PROVIDER SHALL NOT HE HELD LIABLE OR RESPONSIBLE FOR LOSS AND/OR DAMAGE TO PERSONS OR PROPERTY CAUSED DIRECTLY OR INDIRECTLY BY THE PERFORMANCE, OR LACK OF PERFORMANCE, OF THE OBLIGATIONS IMPOSED BY THIS AGREEMENT.

11. **LIMITATION ON LAWSUITS; WAIVER; SEVERABILITY; GOVERNING LAW:** Both Service Provider and Client agree that no demand for arbitration, lawsuit or any other legal proceeding connected with this Agreement shall be brought or filed more than one year after the incident giving rise to the claim. A waiver by Client or Service Provider of any term or condition of this Agreement in any instance shall not be deemed or construed to be a waiver of such term or condition in the future, or any subsequent breach thereof. If any provision of this Agreement as applied to either Client or Service Provider or any circumstance shall be adjudged by a court to be void and unenforceable, such shall in no way affect any other provision of this Agreement, the application of such provision in any other circumstance, or the validity or enforceability of this Agreement. This Agreement shall be construed in accordance with the laws of the State of California applicable to agreements which are executed and fully performed within said state without regard to California's conflicts of interest rules.

12. **ENTIRE AGREEMENT:** Except as expressly set forth herein, this Agreement (and any Exhibits or Schedules attached hereto) is the sole and entire agreement between Client and Service Provider and supersedes all prior representations, negotiations, promises, understanding or agreements, whether oral or written, between Client and Service Provider with respect to the subject matter hereof.

13. **SERVICE PROVIDER LICENSE:** PRIVATE PATROL OPERATORS ARE LICENSED AND REGULATED BY THE BUREAU OF SECURITY AND INVESTIGATIVE SERVICE, CALIFORNIA STATE DEPARTMENT OF CONSUMER AFFAIRS, SACRAMENTO, CALIFORNIA, 95814, www.bsis.ca.gov.

DocuSign Envelope ID: 0BC1E947-B2A2-4491-BD21-63BA1FE1192E

California METRO PATROL

Law Enforement Founded Armed Patrol
Since 2007

SECURITY SERVICES – ADDENDUM

Prepared for: City of South Pasadena – City Hall
1414 Mission Street, South Pasadena, CA 91030
Attn: City of South Pasadena – City Hall Main (626) 403-7230
Police Department Main (626) 403-7270

March 21st, 2023

Accepted By: Domenica Megerdichian
Signed

Printed Name: Domenica Megerdichian Date: 03/29/2023
Deputy City Manager

DocuSign Envelope ID: 0BC1E947-B2A2-4491-BD21-63BA1FE1192E

California METRO PATROL

Law Enforcement Founded Armed Patrol
Since 2007

ADDENDUM – Posted CONCIERGE (Plain Clothes Security Officer)

California Metro Patrol is pleased to provide the following services to **City of South Pasadena City Hall / Police Department**, for Concierge plain clothes security officer inside the City Hall facility. CMP is grateful for the opportunity to fulfil security services to meet security needs of **City Hall and Police Department**.

CONCIERGE SECURITY INCLUDES:

CMP will provide and support our clientele to mitigate security incidents the following:

- Entry area visibility and entry verification of patrons to City Hall
- Armed/Un-Armed escorts with qualified and trained officers for City Personnel
- Requested Additional venues for city sanctioned events and special events

ARMED PATROL OFFICERS

All of CMP's armed security officers receive regular firearms training with a veteran range master, Phil Rapagna (Retired Pasadena Police Department)

Budget

SERVICE	BUDGET
Unarmed Concierge plain clothes security officer	**$ 41.11 / Hour**
Posted Concierge plain clothes security officer primary responsibility of greeting and welcoming city visitors and staff at City Hall and Police Department. Concierge focuses on keeping the public informed and a safe environment for city visitors and city employees. Additionally being available to the city council members for escorts and personal attention for their needs.	

Initials: MM

DocuSign Envelope ID: 0BC1E947-B2A2-4491-BD21-63BA1FE1192E

California METRO PATROL

Law Enforcement Founded Armed Patrol
Since 2007

Security Summary

This California Metro Patrol ADDENDUM covers on-site Concierge plain clothes security detail of **1414 Mission Street, South Pasadena CA 91030**. The City of South Pasadena falls in the geographic boundaries of CMP's regular service and patrol area.

ADDITIONAL Patrols can be or that are requested will be performed randomly through the shift to increase effectiveness of service.
Concierge security services are to cover the following schedule:

Required set days per week 10 hours a day (8am -to- 6pm):

1. Monday -thru- Thursday 4 days

**The set schedule times are determined by the City of South Pasadena:*

- Scheduled by city hall staff or assigned Police Department designee
- Police Officers may be summoned for additional response during the day

Additional Security Detail

For added security or a scheduled event, in an Emergency Situation or at "Cities Request", If necessary, a detail of one (1) to three (3) security officers, with a 4-hour minimum and up to 8-hour maximum per shift for events or requested service in a time of need. These additional CMP Officers can be assigned for such events as city sanctioned public events if the need arises for additional staffing.

Patrol Response

During the assigned detail, CMP offers added Patrol Officers to respond and enhance the assigned Concierge plain clothes Officer, which increases the layered security service during the day and times of service, If a situation requires additional CMP resources in such instances as a crowd control up-rising where need oversight by security is requested.

Initials:

DocuSign Envelope ID: 0BC1E947-B2A2-4491-BD21-63BA1FE1192E

BILLING CYCLE

Invoicing for a specialized Posted & Patrol Security officer detail and Patrol response:

- Issued Monthly
- Payment due 21-day net after electronic e-mail receipt

DETAIL

CMP Concierge plain clothes officer will provide the City Hall / Police Department with a welcoming and customer service based greeter with the ability to address immediate security needs as a buffer until South Pasadena Police personnel can arrive on-scene to address and resolve a security need or breach in the safety of the City Hall facility.
This detail will focus on areas of concerns:

- Greeting the general public and assisting with directions around City Hall
- Integrity of the property, surroundings, perimeter and pathways around City Hall; maintaining high visibility to deter unwanted activity or potential theft or threat
- Assigned on-call patrol supervisor for the account to ensure compliance of the assigned officer and supplemental resource should the need arise

Other Budget Coverage

HOLIDAY COVERAGE

Billed at Holiday Rate $98.88/hr (***ONLY if Requested by the City of South Pasadena***)
CMP requests a 1-month advanced notice of scheduling Officers for Holiday coverage. In the event that we do not receive a 1-month advance notice, the hours will be billed at double rate time.

COURT TIME

Billed at $118.00/hr (***Only if the Officer is NOT with-in regularly assigned hours***), with a 4-hour minimum for morning and afternoon sessions, should an officer be called to testify in a criminal/civil case related to a city incident, court time is billed accordingly.

Initials: DVM

DocuSign Envelope ID: 0BC1E947-B2A2-4491-BD21-63BA1FE1192E

California
METRO PATROL
Law Enforcement Founded Armed Patrol
Since 2007

California Metro Patrol Team

CMP's management team has a combined 114 years of law enforcement and civil service experience and diverse expertise in security and protection. Along with our proven safety experience, we are customer-focused and emphasize building trusted relationships through client satisfaction. The team is headed by Joseph Perez and supported by a cadre of retired law enforcement and civil service members.

On behalf of Chief Joseph Perez and the California Metro Patrol team, thank you for your ACCEPTANCE of this executed Concierge security services plan. Please feel free to contact us with any questions you might have. We strive to meet the needs and the security strategy set fourth for the **City of South Pasadena – 1414 Mission Street, South Pasadena, CA 91030**.

Very Sincerely,

Joseph A. Perez
Operations Chief
jperez@californiametropatrol.com | (562) 888-3788

Initials:

DocuSign Envelope ID: 0BC1E947-B2A2-4491-BD21-63BA1FE1192E

Certificate of Liability

DocuSign Envelope ID: 0BC1E947-B2A2-4491-BD21-63BA1FE1192E

ACORD®

CERTIFICATE OF LIABILITY INSURANCE

DATE (MM/DD/YYYY): 3/24/2023

THIS CERTIFICATE IS ISSUED AS A MATTER OF INFORMATION ONLY AND CONFERS NO RIGHTS UPON THE CERTIFICATE HOLDER. THIS CERTIFICATE DOES NOT AFFIRMATIVELY OR NEGATIVELY AMEND, EXTEND OR ALTER THE COVERAGE AFFORDED BY THE POLICIES BELOW. THIS CERTIFICATE OF INSURANCE DOES NOT CONSTITUTE A CONTRACT BETWEEN THE ISSUING INSURER(S), AUTHORIZED REPRESENTATIVE OR PRODUCER, AND THE CERTIFICATE HOLDER.

IMPORTANT: If the certificate holder is an ADDITIONAL INSURED, the policy(ies) must be endorsed. If SUBROGATION IS WAIVED, subject to the terms and conditions of the policy, certain policies may require an endorsement. A statement on this certificate does not confer rights to the certificate holder in lieu of such endorsement(s).

PRODUCER	CONTACT NAME: Betty Baldivia
El Dorado Insurance Agency, Inc. El Dorado Sec Srvs Ins Agy 3673 Westcenter Drive Houston TX 77042	PHONE (A/C, No, Ext): (713) 521-9251 FAX (A/C, No): (713) 521-0125 E-MAIL ADDRESS: bbaldivia@eldoradoinsurance.com

INSURED	INSURER(S) AFFORDING COVERAGE	NAIC #
California Metro Private Security Patrol 1308 East Colorado Blvd., #588 Pasadena CA 91106	INSURER A: Certain Underwriters at Lloyd's London	32727
	INSURER B: Progressive Insurance	29203
	INSURER C: Kinsale Insurance Company	38920
	INSURER D: Norguard Insurance Company	31470
	INSURER E:	
	INSURER F:	

COVERAGES **CERTIFICATE NUMBER:** Special 12/22 **REVISION NUMBER:**

THIS IS TO CERTIFY THAT THE POLICIES OF INSURANCE LISTED BELOW HAVE BEEN ISSUED TO THE INSURED NAMED ABOVE FOR THE POLICY PERIOD INDICATED. NOTWITHSTANDING ANY REQUIREMENT, TERM OR CONDITION OF ANY CONTRACT OR OTHER DOCUMENT WITH RESPECT TO WHICH THIS CERTIFICATE MAY BE ISSUED OR MAY PERTAIN, THE INSURANCE AFFORDED BY THE POLICIES DESCRIBED HEREIN IS SUBJECT TO ALL THE TERMS, EXCLUSIONS AND CONDITIONS OF SUCH POLICIES. LIMITS SHOWN MAY HAVE BEEN REDUCED BY PAID CLAIMS.

INSR LTR	TYPE OF INSURANCE	ADDL INSD	SUBR WVD	POLICY NUMBER	POLICY EFF (MM/DD/YYYY)	POLICY EXP (MM/DD/YYYY)	LIMITS	
A	X COMMERCIAL GENERAL LIABILITY CLAIMS-MADE X OCCUR X Professional Liability GEN'L AGGREGATE LIMIT APPLIES PER: X POLICY PRO-JECT LOC OTHER:			MPL4014449.22	12/11/2022	12/11/2023	EACH OCCURRENCE DAMAGE TO RENTED PREMISES (Ea occurrence) MED EXP (Any one person) PERSONAL & ADV INJURY GENERAL AGGREGATE PRODUCTS - COMP/OP AGG	$ 1,000,000 $ 50,000 $ 5,000 $ 1,000,000 $ 2,000,000 $ 1,000,000
B	AUTOMOBILE LIABILITY X ANY AUTO ALL OWNED AUTOS SCHEDULED AUTOS HIRED AUTOS NON-OWNED AUTOS			00541921-0	11/18/2022	5/18/2023	COMBINED SINGLE LIMIT (Ea accident) BODILY INJURY (Per person) BODILY INJURY (Per accident) PROPERTY DAMAGE (Per accident)	$ 1,000,000 $ $ $
C	UMBRELLA LIAB X OCCUR X EXCESS LIAB CLAIMS-MADE DED RETENTION $			0100109956-3	12/11/2022	12/11/2023	EACH OCCURRENCE AGGREGATE	$ 3,000,000 $ 3,000,000
D	WORKERS COMPENSATION AND EMPLOYERS' LIABILITY ANY PROPRIETOR/PARTNER/EXECUTIVE OFFICER/MEMBER EXCLUDED? Y/N (Mandatory in NH) If yes, describe under DESCRIPTION OF OPERATIONS below	N/A		CAWC332302	12/2/2022	12/2/2023	X PER STATUTE OTH-ER E.L. EACH ACCIDENT E.L. DISEASE - EA EMPLOYEE E.L. DISEASE - POLICY LIMIT	$ 1,000,000 $ 1,000,000 $ 1,000,000

DESCRIPTION OF OPERATIONS / LOCATIONS / VEHICLES (ACORD 101, Additional Remarks Schedule, may be attached if more space is required)

The General Liability policy includes a blanket automatic additional insured endorsement that provides additional insured status to the certificate holder only when there is a written contract between the named insured and the certificate holder that requires such status. The General Liability policy includes a blanket automatic waiver of subrogation endorsement that provides this feature only when there is a written contract between the named insured and the certificate holder that requires it. $250,000 Assault & Battery limits included The Workers' Compensation policy includes a blanket automatic waiver of subrogation endorsement that provides this feature only when there is a written contract between the

CERTIFICATE HOLDER

Stage & Standup Production, Inc.
24 North Mentor
Pasadena, CA 91106

CANCELLATION

SHOULD ANY OF THE ABOVE DESCRIBED POLICIES BE CANCELLED BEFORE THE EXPIRATION DATE THEREOF, NOTICE WILL BE DELIVERED IN ACCORDANCE WITH THE POLICY PROVISIONS.

AUTHORIZED REPRESENTATIVE

R.L. Ring, Jr./BETTY

© 1988-2014 ACORD CORPORATION. All rights reserved.

DocuSign Envelope ID: 0BC1E947-B2A2-4491-BD21-63BA1FE1192E

COMMENTS/REMARKS

named insured and the certificate holder that requires it.

COPYRIGHT 2000, AMS SERVICES INC.

DocuSign Envelope ID: 0BC1E947-B2A2-4491-BD21-63BA1FE1192E

C.	Limited liability companies	If **you** are a duly organized limited liability company, **your** members and their spouses are **insureds**, but only with respect to the conduct of **your** business. **Your** managers are also **insureds**, but only with respect to their duties as **your** managers.
D.	Other organizations	If **you** are an organization (including a professional corporation) other than a partnership, joint venture, or limited liability company, **your** directors and **officers** are **insureds**, but only with respect to their duties as **your** directors or **officers**. **Your** stockholders and their spouses are also **insureds**, but only with respect to their liability as **your** stockholders.
E.	Trusts	If **you** are a trust, **your** trustees are **insureds**, but only with respect to their duties as **your** trustees.
F.	Employees	**Your employees** are **insureds**, but only while in the course and scope of their employment by **you** or while performing duties related to the conduct of **your** business.
G.	Volunteer workers	**Your volunteer workers** are **insureds**, but only while in the course and scope of their activities related to the conduct of **your** business performed on **your** behalf or at **your** direction.
H.	Real estate managers	Persons (other than **your employees**) or organizations acting as **your** real estate managers are **insureds**, but only with respect to their duties as **your** real estate managers.
I.	Amateur athletic participants	Any person representing **you** while participating in an amateur athletic activity **you** sponsor is an **insured**. However, no such person is an **insured** for: 1. **bodily injury** to: a. a co-participant, **your employee**, or **your volunteer worker** while also participating in the amateur athletic activity **you** sponsor; or b. **you** or any of **your** partners, members, or **officers**; or 2. **property damage** to property owned, occupied, or used by; rented to; or in the care, custody, or control of: a. a co-participant in the amateur athletic activity **you** sponsor, **your employee**, or **your volunteer worker**; or b. **you** or any of **your** partners, members, or **officers**.
J.	Newly acquired or formed organizations	If there is no other similar insurance available, any organization **you** acquire or form during the **policy period**, and in which **you** have majority ownership or interest at the time of an **occurrence** or offense covered by this Coverage Part, will qualify as an **insured**. This coverage is effective on the date of acquisition or formation and is afforded only until the 180th day after **you** acquire or form the organization, or the end of the **policy period**, whichever is earlier. There is no coverage for the acquired or formed organization for: 1. **bodily injury** or **property damage** that occurred; or 2. **personal or advertising injury** arising out of an offense that was committed, before **you** acquired or formed the organization. The acquired or formed organization is an **insured** only with respect to the conduct of **your** business.
K.	Additional insureds	If **you** have agreed in a written contract or agreement to add them as an additional insured to a policy providing the type of coverage afforded by this Coverage Part, the following persons or organizations are **insureds**: 1. Any person or organization from whom **you** lease any premises, but only with respect to liability arising out of the ownership, maintenance, or use of that part of the premises leased to **you**. However, there is no coverage for such additional insureds for any structural alterations, new construction, or demolition operations performed by or on behalf of the additional insured.

Includes copyrighted material of Insurance Services Offices, Inc., with its permission

DocuSign Envelope ID: 0BC1E947-B2A2-4491-BD21-63BA1FE1192E

WAIVER OF OUR RIGHT TO RECOVER FROM OTHERS ENDORSEMENT–CALIFORNIA

We have the right to recover our payments from anyone liable for an injury covered by this policy. We will not enforce our right against the person or organization named in the Schedule. (This agreement applies only to the extent that you perform work under a written contract that requires you to obtain this agreement from us.)

You must maintain payroll records accurately segregating the remuneration of your employees while engaged in the work described in the Schedule.

The additional premium for this endorsement shall be 1.05 % of the California workers' compensation premium otherwise due on such remuneration.

Schedule

Person or Organization	Job Description
Alliance Residential, LLC	Patrol serices @ 289 N Elmoline Ave, Pasadena CA 91101
WinnResidential	Walking Patrol of property
City of Pasadena	Security at 1020 N Fair Oaks Avenue, Pasadena, CA

This endorsement changes the policy to which it is attached and is effective on the date issued unless otherwise stated.
(The information below is required only when this endorsement is issued subsequent to preparation of the policy.)

Endorsement Effective
Insured

Policy No. **CAWC332302**
Insurance Company

Endorsement No.

Countersigned By _____

©1998 by the Workers' Compensation Insurance Rating Bureau of California. All rights reserved.

City Council Agenda Report

ITEM NO. 20

DATE: June 18, 2025

FROM: Todd Hileman, City Manager

PREPARED BY: Michael Vartanians, Principal Engineer

SUBJECT: **CONSIDER APPROVAL OF A TASK ORDER WITH NV5 FOR CAPITAL IMPROVEMENT PROGRAM STAFF AUGMENTATION SERVICES FOR DESIGN AND PROJECT MANAGEMENT SERVICES IN THE AMOUNT NOT TO EXCEED $380,000.**

Recommendation

It is recommended that the City Council approve the Task Order under a Master On-Call Professional Services Agreement with NV5,in the final form approved by the City Attorney, to provide civil engineer design and project management services for the City's Fiscal Year 25-26 Street Improvement Project in the not-to-exceed amount of $380,000.

Executive Summary

The City's Fiscal Year (FY) 2025-2026 Capital Improvement Program (CIP) includes the design of the Fremont Avenue & Huntington Drive Corridor Project, the North-South Corridor (Fair Oaks) ITS Deployment project, the Indiana & Pasadena Street Improvement Project and the Orange Zone Street Improvement Project. City Staff is requesting approval of a task order to provide a dedicated project manager through a preapproved on-call professional services consultants to ensure the design of these four infrastructure projects can progress efficiently through the design stage and into the construction stage in Fiscal Year 2026-2027. This item proposes the approval of a task order with NV5 for professional services to manage civil engineering design and project management of these four projects.

Background

The City's Public Works Department is responsible for developing and implementing the City's CIP, including improvement of the City's roadway infrastructure. City Council recently reviewed the proposed Fiscal Year 2025-2026 Capital Improvement Program (CIP) which outlined various projects that staff intends to deliver over the next five fiscal years. In order to deliver these projects additional staffing resources are required. In an effort to prevent delays to these four CIP projects, city staff will need to augment its staffing abilities through the use of on-call consultants to assist with management of design consultants working to prepare plans, specifications and cost estimates for these four projects allowing the projects to enter into the project advertisement stage. Once these projects enter the construction stage it is anticipates that city staff will require construction management and inspection services similar to other CIP projects that the City has been awarding.

Analysis

On July 27, 2022, the City Council authorized the approval of multiple Master Service

Agreements with professional services consultants for Public Works related on-call assignments. NV5 is one of the consultants approved by the City Council, having submitted a proposal to provide civil engineering design and project management services. NV5 is well qualified to complete the scope of work required. NV5's scope of work, under this task order, includes providing civil engineering design and project management design services utilizing one dedicated project manager staff member.

For Fiscal Year 2025-2026, the project manager has been programmed for 2,000 hours at $185 per hour. The project managers responsibilities will be focused on project management services for the Fremont Avenue & Huntington Drive Corridor Project, the North-South Corridor (Fair Oaks) ITS Deployment project, the Indiana & Pasadena Street Improvement Project and the Orange Zone Street Improvement Project.

The Master Service Agreements for each on-call consultant includes 'Task Order' exhibits that are executed based on the specific scope for each specific task or project. To ensure that use of these on-call professional services follows City Council's adopted procurement policy, Task Orders above the City Manager's spending authority, such as this item's proposed work, are brought to Council for approval.

Fiscal Impact
Funding for this task order will be available in the Fiscal Year 2025-2026 budget under the Transportation Fremont Avenue & Huntington Drive Corridor CIP Project, the Transportation North-South Corridor (Fair Oaks) ITS Deployment CIP Project, the Streets & Sidewalk Indiana & Pasadena Reconstruction CIP Project and the Streets & Sidewalk Orange Zone Reconstruction CIP Project. A new CIP project account no. 400-9000-9008-9xxx-000 will be created for the Orange Zone Reconstruction Project. Funding of this task order would be as follows.

A transfer of $100,000 to the Fremont Avenue & Huntington Drive Corridor Project (400-9000-9010-9103-000) from Fund 233 Measure R Local Return Account.

A transfer of $90,000 to the North-South corridor (Fair Oaks) ITS Deployment Project (400-9000-9010-9161-000) from Fund 205 Proposition A Location Return Account.

A transfer of $90,000 to the North-South Corridor (Fair Oaks) ITS Deployment Project (400-9000-9010-9161-000) from Fund 207 Proposition C Location Return Account.

A transfer of $25,000 to the Indiana & Pasadena Reconstruction Project (400-9000-9008-9204-000) from Fund 233 Measure R Local Return Account.

A transfer of $25,000 to the Indiana & Pasadena Reconstruction Project (400-9000-9008-9204-000) from Fund 236 Measure M Local Return Account.

A transfer of $13,000 to the Orange Zone Reconstruction Project (400-9000-9008-9xxx-000) from Fund 233 Measure R Local Return Account.

A transfer of $13,000 to the Orange Zone Reconstruction Project (400-9000-9008-9xxx-000) from Fund 236 Measure M Local Return Account.

A transfer of $24,000 to the Orange Zone Reconstruction Project (400-9000-9008-9xxx-000)

from Fund 500 Water Enterprise Fund Account.

Key Performance Indicators and Strategic Plan
This item is related to the street improvement goals in the City Council's 2025 compilation of priorities, number 2(a).

Commission Review and Recommendation
The Capital Improvement Program has been discussed at multiple meetings of the Mobility and Infrastructure Transportation Commission, Public Works Commission and the Public Works Infrastructure Commission.

Public Notification
The public was made aware that this item was to be considered this evening by virtue of its inclusion on the legally publicly noticed agenda, posting of the same agenda and reports on the City's website.

Attachment:
Attachment No. 1 - Proposed Task Order
Attachment No. 2 - Master On-Call Professional Services Agreement

TASK ORDER NO. [NV5R9266-004]

TO MASTER PROFESSIONAL SERVICES AGREEMENT (2024-206)

This Task Order No. **[NV5R9266-004]** ("Task Order") is made and entered into by and between the City of South Pasadena, a municipal corporation ("City"), and [NV5] ("Consultant").

RECITAL

A. City and Consultant entered into an agreement entitled Master On-Call Professional Services Agreement ("Agreement") dated **December 4, 2024** by which the Consultant agreed to perform **Civil Design Engineering Services** in accordance with Task Orders issued by the City.

NOW, THEREFORE, THE PARTIES HEREBY AGREE AS FOLLOWS:

1. **INCORPORATION BY REFERENCE.** This Task Order hereby incorporates by reference all terms and conditions set forth in the Agreement.

2. **SCOPE OF TASK ORDER.** Consultant shall perform the following services in accordance with the terms and conditions of the Agreement:

FY 25-26 Staff Augmentation

Consultant shall provide Staff Augmentation Services to the City for the FY 25-26. Consultant shall provide a City Project Manager role to manage progress of the City's Capital Improvement Projects. Consultant shall provide a full-time staff member for 2,000 hours to serve as the City's dedicated Project Manager.

- Provide grant management for the federally funded projects, ensuring that grant paperwork is passed down to the City's selected design engineer and the City's construction contractor. Ensure that grant paperwork is completed and filed on time.
- Provide City Project Management from RFP preparation for CIP projects to secure the design consultant, management of the design consultant including plan check and plan review of CIP projects, bid and award recommendation, and management of the Construction Contractor through final project close-out.
- Participate in and oversee staff assigned to the Public Works Permitting Administration processes involving work activities to be conducted in the Right-of-Way (ROW) for the CIP projects.
- Develop scope of work, bid component breakdown items, and special provisions in RFP format for CIP projects.
- Manage RFIs, notice of delays, change orders, and schedules for recommendations to the City's Principal Engineer.

- Prepare City Invitation for Bid (IFB) packages and work with Public Works administrative staff and CIP Analyst on issuance.
- Review and process invoices for CIP projects, annual contractor assignments, and design consultants.
- File and submit contractor and design consultant invoices for reimbursements.
- Conduct field investigations to assist the City's designer or City's construction contractor on solving requests for information to verify existing infrastructure conditions in the City for CIP projects.
- Assist the City's designer in constructability reviews and review City designer's cost estimates for CIP projects.
- Perform other duties as assigned.
- Consultant's staff shall use City forms whenever possible and shall have access to City computers to file appropriate documentation on the City server. Consultant shall have access to a laptop and cellphone. Other software, including CMIS, can be made available to the City at no additional charge for any CIP project where the Consultant's staff is working on.

3. **TASK ORDER ADMINISTRATOR.** Consultant shall designate a principal point of contact for this task order:

   Luanne Bean, P.E.
   Director of Program and Construction Management
   NV5
   163 Technology Drive, Suite 100
   Irvine, CA 92618
   Office Telephone: (949) 585-0477
   Mobile Telephone: (951) 377-1566
   Email: Luanne.Bean@nv5.com

4. **SCHEDULE.** Consultant shall complete the Task Order by the date listed below, or, if specified, in accordance with the required schedule of milestones listed below:
   All scope items listed in this task order shall be completed as directed by the City of Public Works Director.

5. **PAYMENT.** For services performed by Consultant in accordance with this Task Order, City will compensate Consultant in accordance with the terms and conditions of the Agreement based on the Fee Schedule set forth below. The total cost of this project is to be no more than **Three-Hundred and Eighty-Thousand Dollars ($380,000)**, based on the rates in the Fee Schedule set forth below. Payments shall be made on an hourly basis, and shall be invoiced by the Consultant upon approval by the City, in accordance with the below costs.

   Invoices shall be submitted electronically to PWAP@southpasadenaca.gov

Table 1: NV5 Tasks and Assigned Personnel with Hourly Rates ($ / hr)			
Task	**Project Manager** **$ 185 / hr**	**ODCs***	**Task Fee**
1	2,000 hrs $370,000	$1,000	2,000 hours $380,000
Total	2,000 hrs $370,000	$1,000	2,000 hours $380,000

*ODCs are reimbursable expenses such as on-the-job mileage, postage and printing and will be billed in accordance with our rate sheet

6. **SIGNATURES.** The individuals executing this Task Order represent and warrant that they have the right, power, legal capacity, and authority to enter into and to execute this Task Order on behalf of the respective legal entities of the Consultant and the City.

IN WITNESS WHEREOF, the City and Consultant do hereby agree to the full performance of the terms set forth herein.

"City"	"Consultant"
City of South Pasadena	**NV5**
By:_____	By:_____
Signature	*Signature*
Printed:_____	Printed:_____
Title:_____	Title:_____
Date:_____	Date:_____

Attest:

By:_____
Hector Gomez, Chief City Clerk

Date:_____

Approved as to form:

By:_____
Roxanne Diaz, City Attorney

Date:_____

MASTER ON-CALL PROFESSIONAL SERVICES AGREEMENT FOR CONSULTANT SERVICES

(City of South Pasadena /NV5, Inc.)

1. IDENTIFICATION

This PROFESSIONAL SERVICES AGREEMENT ("Agreement") is entered into by and between the City of South Pasadena, a California municipal corporation ("City"), and **NV5, Inc.** ("Consultant").

2. RECITALS

2.1. City has determined that it requires the following professional services from a consultant:

- **Civil Design Engineering Services**
- **Structural Design Engineering Services**
- **Facility Design Engineering Services**
- **Public Works and Development Land Use, Subdivision Control, Map and Plan Check Services**
- **Traffic/Transportation Engineering Services**
- **Geographic Information Systems (GIS) Support Services**
- **Computer Aided Drafting (CAD) Design Services**
- **Surveying Services**
- **Environmental Consulting and Document Services**
- **Environmental Monitoring Services**
- **Sustainability, Electrical, Solar, and Energy Design and Assessment Services**
- **Construction Management Services**
- **Inspection Services**
- **Seismic and Structural Examination Services**
- **Material Testing and Geotechnical Engineering Services**
- **Stormwater, Flood Plain, and Hydrogeological Engineering Services**
- **Building and Facility Assessment Services**
- **Assessment District Services**

2.2. Consultant represents that it is fully qualified to perform such professional services by virtue of its experience and the training, education and expertise of its principals and employees. Consultant further represents that it is willing to accept responsibility for performing such services in accordance with the terms and conditions set forth in this Agreement.

2.3. Consultant represents that it has no known relationships with third parties, City Council members, or employees of City which would (1) present a conflict of interest with the rendering of services under this Agreement under Government Code Section 1090, the Political Reform Act (Government Code Section 81000 *et seq.*), or other applicable

law, (2) prevent Consultant from performing the terms of this Agreement, or (3) present a significant opportunity for the disclosure of confidential information.

NOW, THEREFORE, for and in consideration of the mutual covenants and conditions herein contained, City and Consultant agree as follows:

3. DEFINITIONS

3.1. "Scope of Services": Such professional services as are set forth in Exhibit A. Specific scope of work for specific project assignments shall be identified through executed Task Orders, which shall incorporate by reference the terms of this Master Agreement.

3.2. "Agreement Administrator": The Agreement Administrator for this project is **H. Ted Gerber, Public Works Director**. The Agreement Administrator shall be the principal point of contact at the City for this project. All services under this Agreement shall be performed at the request of the Agreement Administrator. The Agreement Administrator will establish the timetable for completion of services and any interim milestones. City reserves the right to change this designation upon written notice to Consultant

3.3. "Approved Fee Schedule": Consultant's compensation rates are set forth in the fee schedule attached hereto as Exhibit B and incorporated herein by this reference. This fee schedule shall remain in effect for the duration of this Agreement unless modified in writing by mutual agreement of the parties.

3.4. "Design Professional": A Design Professional is any individual satisfying one or more of the following: (1) licensed as an architect pursuant to Business and Professions Code 5500 et seq., (2) licensed as a landscape architect pursuant to Business and Professions Code 5615 et seq., (3) licensed as a professional land surveyor pursuant to Business and Professions Code 8700 et seq., or (4) registered as a professional engineer pursuant to Business and Professions Code 6700 et seq.

3.5. "Commencement Date": **December 4, 2024**.

3.6. "Termination Date": **June 30, 2025**.

4. TERM

The term of this Agreement shall commence at 12:00 a.m. on the Commencement Date and shall expire at 11:59 p.m. on the Termination Date unless extended by written agreement of the parties or terminated earlier under Section 18 ("Termination") below. Consultant may request extensions of time to perform the services required hereunder. Such extensions shall be effective if authorized in advance by City in writing and incorporated in written amendments to this Agreement.

5. IDENTIFICATION OF PROJECTS

5.1. When City determines a need exists for any of the services specified in Exhibit A to this Agreement, City and Consultant may execute a "Task Order" detailing the specific services needed, the applicable fees therefor in accordance with Exhibit B to this Agreement, and the time for completion of such services by Consultant. Each Task Order shall incorporate by reference the terms of this Agreement and shall be sequentially-identified. Consultant shall only perform services under this Agreement and be paid for work performed pursuant to a Task Order approved and executed by the City.

6. CONSULTANT'S DUTIES

6.1. **Services**. Consultant shall perform the services identified in the Task Order. City shall have the right to request, in writing, changes to the Task Order. Any such changes mutually agreed upon by the parties, and any corresponding increase or decrease in compensation, shall be incorporated by written amendment to the Task Order or this Agreement.

6.2. **Coordination with City**. In performing services under this Agreement, Consultant shall coordinate all contact with City through its Agreement Administrator.

6.3. **Budgetary Notification**. Consultant shall notify the Agreement Administrator, in writing, when fees and expenses incurred under this Agreement have reached eighty percent (80%) of the Maximum Amount. Consultant shall concurrently inform the Agreement Administrator, in writing, of Consultant's estimate of total expenditures required to complete its current assignments before proceeding, when the remaining work on such assignments would exceed the Maximum Amount.

6.4. **Business License.** Consultant shall obtain and maintain in force a City business license for the duration of this Agreement.

6.5. **Professional Standards.** Consultant shall perform all work to the standards of Consultant's profession and in a manner reasonably satisfactory to City. Consultant shall keep itself fully informed of and in compliance with all local, state, and federal laws, rules, and regulations in any manner affecting the performance of this Agreement, including all Cal/OSHA requirements, the conflict of interest provisions of Government Code § 1090 and the Political Reform Act (Government Code § 81000 et seq.).

6.6. **Avoid Conflicts.** During the term of this Agreement, Consultant shall not perform any work for another person or entity for whom Consultant was not working at the Commencement Date if such work would present a conflict interfering with performance under this Agreement. However, City may consent in writing to Consultant's performance of such work.

6.7. **Appropriate Personnel.** Consultant has, or will secure at its own expense, all personnel required to perform the services identified in the Task Order. All such services shall be performed by Consultant or under its supervision, and all personnel engaged in the work shall be qualified to perform such services. **David Niknafs** shall be Consultant's project administrator and shall have direct responsibility for management of Consultant's performance under this Agreement. No change shall be made in Consultant's project administrator without City's prior written consent.

6.8. **Substitution of Personnel.** Any persons named in the proposal or Task Order constitutes a promise to the City that those persons will perform and coordinate their respective services under this Agreement. Should one or more of such personnel become unavailable, Consultant may substitute other personnel of at least equal competence upon written approval of City. If City and Consultant cannot agree as to the substitution of key personnel, City may terminate this Agreement for cause.

6.9. **Unauthorized Delay.** Consultant shall complete all services associated with the Task Order within the time period specified therein, or within seven (7) work days after execution thereof if no time is specified, as directed by the Agreement Administrator.

6.10. **Unforeseeable Delay.** Consultant shall not be deemed in breach of this Agreement or any Task Order, and no forfeiture due to delay shall be made, because of any delays in the completion of a Task Order due to unforeseeable causes beyond the control and without the fault or negligence of Consultant provided Consultant requests from the Agreement Administrator an extension of time in writing. Unforeseeable causes of delay beyond the control of Consultant shall include acts of God, acts of a public enemy, acts of the government, acts of City, or acts of another consultant or contractor in the performance of a contract with City, fires, floods, epidemics, quarantine restrictions, strikes, freight embargoes, and weather, or delays of sub-consultants due to such causes, or delays caused by failure of the owner of a utility to provide for removal or relocation of existing utility facilities. Delays caused by actions or negligence of Consultant or its agents, servants, employees, officers, sub-consultants, directors, or of any party contracting to perform part of all of the Scope of Services or to supply any equipment or materials shall not be unforeseeable delays. Unforeseeable delays (those beyond Consultant's control) shall not entitle Consultant to any additional compensation beyond the Maximum Amount. The sole recourse of Consultant shall be to seek an extension of time from the Agreement Administrator.

6.11. **Defective Work.** All work which is defective in its construction or deficient in any of the requirements set by City Reference Specifications shall be remedied or replaced by Consultant in an acceptable manner at its own expense. Defective work shall not entitle Consultant to any additional compensation beyond the Maximum Amount.

6.12. **Permits and Approvals.** Consultant shall obtain, at its sole cost and expense, all permits and regulatory approvals necessary for Consultant's performance of this Agreement. This includes, but shall not be limited to, professional licenses, encroachment permits and building and safety permits and inspections.

6.13. **Notification of Organizational Changes.** Consultant shall notify the Agreement Administrator, in writing, of any change in name, ownership or control of Consultant's firm or of any sub-consultant. Change of ownership or control of Consultant's firm may require an amendment to this Agreement.

6.14. **Records.** Consultant shall maintain any and all ledgers, books of account, invoices, vouchers, canceled checks, and other records or documents evidencing or relating to charges for services or expenditures and disbursements charged to City under this Agreement for a minimum of three (3) years, or for any longer period required by law, from the date of final payment to Consultant under this Agreement. All such documents shall be made available for inspection, audit, and/or copying at any time during regular business hours, upon oral or written request of City. In addition, pursuant to Government Code Section 8546.7, if the amount of public funds expended under this Agreement exceeds ten thousand dollars, all such documents and this Agreement shall be -ject to the examination and audit of the State Auditor, at the request of City or as part of any audit of City, for a period of three (3) years after final payment under this Agreement.

7. SUBCONTRACTING

7.1. **General Prohibition.** This Agreement covers professional services of a specific and unique nature. Except as otherwise provided herein, Consultant shall not assign or transfer its interest in this Agreement or subcontract any services to be performed without amending this Agreement.

7.2. **Consultant Responsible.** Consultant shall be responsible to City for all services to be performed under this Agreement.

7.3. **Subcontracting.** Consultant shall not subcontract any portion of the performance contemplated and provided for herein including any Task Order unless (1) such subcontracting is specifically described in the proposal attached hereto or (2) the City provides prior written approval. In any event, Consultant shall supervise all work subcontracted by Consultant in performing the Services and shall be responsible for all work performed by a sub-consultant as if Consultant itself had performed such work. The subcontracting of any work shall not relieve Consultant from any of its obligations under this Agreement with respect to any Task Order. Consultant is obligated to ensure that any and all sub-consultants performing any services shall be fully insured in all respects and to the same extent as set forth under Section 13, to City's satisfaction.

7.4. **Identification in Fee Schedule.** All sub-consultants shall be specifically listed and their billing rates identified in the Approved Fee Schedule, Exhibit B. Any changes must be approved by the Agreement Administrator in writing as an amendment to this Agreement.

7.5. **Compensation for Sub-consultants.** City shall pay Consultant for work performed by its sub-consultants, if any, only at Consultant's actual cost plus an approved mark-up as set forth in the Approved Fee Schedule, Exhibit B. Consultant shall be liable and accountable for any and all payments, compensation, and federal and state taxes to all sub-consultants performing services under this Agreement. City shall not be liable for any payment, compensation, or federal and state taxes for any sub-consultants.

8. COMPENSATION

8.1. **General.** City agrees to compensate Consultant for the services provided under this Agreement, and Consultant agrees to accept payment in accordance with the Fee Schedule in full satisfaction for such services. Compensation shall not exceed the Maximum Amount stated in the specific Task Order issued for performance of work. Consultant shall not be reimbursed for any expenses unless provided for in this Agreement or authorized in writing in the Task Order. Task Orders over $25,000 shall not be effective unless approved by the City Council.

8.2. **Invoices.** Consultant shall submit to City an invoice, on a monthly basis or as otherwise agreed to by the Agreement Administrator, for services performed pursuant to this Agreement. Each invoice shall identify the Maximum Amount, the services rendered during the billing period, the amount due for the invoice, and the total amount previously invoiced. All labor charges shall be itemized by employee name and classification/position with the firm, the corresponding hourly rate, the hours worked, a description of each labor charge, and the total amount due for labor charges.

8.3. **Taxes.** City shall not withhold applicable taxes or other payroll deductions from payments made to Consultant except as otherwise required by law. Consultant shall be solely responsible for calculating, withholding, and paying all taxes.

8.4. **Disputes.** The parties agree to meet and confer at mutually agreeable times to resolve any disputed amounts contained in an invoice submitted by Consultant.

8.5. **Additional Work.** Consultant shall not be reimbursed for any expenses incurred for work performed outside the Task Order unless prior written approval is given by the City on a time-and-materials basis pursuant to a new or amended Task Order. Consultant shall not undertake any such work without prior written approval of the City. A new or amended Task Order shall be in accordance with the fees identified in Exhibit B to this Agreement.

8.6. **City Satisfaction as Precondition to Payment.** Notwithstanding any other terms of this Agreement, no payments shall be made to Consultant until City is satisfied that the services are satisfactory.

8.7. **Right to Withhold Payments.** If Consultant fails to provide a deposit or promptly satisfy an indemnity obligation described in Section 11, City shall have the right to withhold payments under this Agreement to offset that amount.

9. PREVAILING WAGES

Consultant is aware of the requirements of California Labor Code Section 1720, et seq., and 1770, et seq., as well as California Code of Regulations, Title 8, Section 16000, et seq., ("Prevailing Wage Laws"), which require the payment of prevailing wage rates and the performance of other requirements on certain "public works" and "maintenance" projects. Consultant shall defend, indemnify, and hold the City, tis elected officials, officers, employees, and agents free and harmless form any claim or liability arising out of any failure or alleged failure of Consultant to comply with the Prevailing Wage Laws.

10. OWNERSHIP OF WRITTEN PRODUCTS

All reports, documents or other written material, and all electronic files, including computer-aided design files, developed by Consultant in the performance of this Agreement (such written material and electronic files are collectively known as "written products") shall be and remain the property of City without restriction or limitation upon its use or dissemination by City except as provided by law. Consultant may take and retain copies of such written products as desired, but no such written products shall be the subject of a copyright application by Consultant.

11. RELATIONSHIP OF PARTIES

11.1. **General.** Consultant is, and shall at all times remain as to City, a wholly independent contractor.

11.2. **No Agent Authority.** Consultant shall have no power to incur any debt, obligation, or liability on behalf of City or otherwise to act on behalf of City as an agent. Neither City nor any of its agents shall have control over the conduct of Consultant or any of Consultant's employees, except as set forth in this Agreement. Consultant shall not represent that it is, or that any of its agents or employees are, in any manner employees of City.

11.3. **Independent Contractor Status.** Under no circumstances shall Consultant or its employees look to the City as an employer. Consultant shall not be entitled to any benefits. City makes no representation as to the effect of this independent contractor relationship on Consultant's previously earned California Public Employees Retirement System ("CalPERS") retirement benefits, if any, and Consultant specifically assumes the responsibility for making such a determination. Consultant shall be responsible for all reports and obligations including, but not limited to: social security taxes, income tax withholding, unemployment insurance, disability insurance, and workers' compensation, and other applicable federal and state taxes.

11.4. **Indemnification of CalPERS Determination.** In the event that Consultant or any employee, agent, or subcontractor of Consultant providing services under this Agreement claims or is determined by a court of competent jurisdiction or CalPERS to

be eligible for enrollment in CalPERS as an employee of the City, Consultant shall indemnify, defend, and hold harmless City for the payment of any employee and/or employer contributions for CalPERS benefits on behalf of Consultant or its employees, agents, or subcontractor, as well as for the payment of any penalties and interest on such contributions, which would otherwise be the responsibility of City.

12. INDEMNIFICATION

12.1. **Definitions.** For purposes of this Section 11, "Consultant" shall include Consultant, its officers, employees, servants, agents, or sub-consultants, or anyone directly or indirectly employed by either Consultant or its sub-consultants, in the performance of this Agreement. "City" shall include City, its officers, agents, employees and volunteers.

12.2. **Consultant to Indemnify City.** To the fullest extent permitted by law, Consultant shall indemnify, hold harmless, and defend City from and against any and all claims, losses, costs or expenses for any personal injury or property damage arising out of or in connection with Consultant's alleged negligence, recklessness or willful misconduct or other wrongful acts, errors or omissions of Consultant or failure to comply with any provision in this Agreement.

12.3. **Scope of Indemnity.** Personal injury shall include injury or damage due to death or injury to any person, whether physical, emotional, consequential or otherwise, Property damage shall include injury to any personal or real property. Consultant shall not be required to indemnify City for such loss or damage as is caused by the sole active negligence or willful misconduct of the City.

12.4. **Attorneys Fees.** Such costs and expenses shall include reasonable attorneys' fees for counsel of City's choice, expert fees and all other costs and fees of litigation. Consultant shall not be entitled to any refund of attorneys' fees, defense costs or expenses in the event that it is adjudicated to have been non-negligent.

12.5. **Defense Deposit.** The City may request a deposit for defense costs from Consultant with respect to a claim. If the City requests a defense deposit, Consultant shall provide it within 15 days of the request.

12.6. **Waiver of Statutory Immunity.** The obligations of Consultant under this Section 11 are not limited by the provisions of any workers' compensation act or similar act. Consultant expressly waives its statutory immunity under such statutes or laws as to City.

12.7. **Indemnification by Subcontractors.** Consultant agrees to obtain executed indemnity agreements with provisions identical to those set forth here in this Section 11 from each and every subcontractor or any other person or entity involved in the performance of this Agreement on Consultant's behalf.

12.8. **Insurance Not a Substitute.** City does not waive any indemnity rights by accepting any insurance policy or certificate required pursuant to this Agreement. Consultant's indemnification obligations apply regardless of whether or not any insurance policies are determined to be applicable to the claim, demand, damage, liability, loss, cost or expense.

12.9. **Civil Code.** For Design Professionals, the parties are aware of the provisions of Civil Code 2782.8 relating to the indemnification and the duty and the cost to defend a public agency by a Design Professional and agree that this Section 12 complies therewith.

13. INSURANCE

13.1. **Insurance Required.** Consultant shall maintain insurance as described in this section and shall require all of its subcontractors, sub-consultants, and other agents to do the same. Approval of the insurance by the City shall not relieve or decrease any liability of Consultant Any requirement for insurance to be maintained after completion of the work shall survive this Agreement.

13.2. **Documentation of Insurance.** City will not execute this agreement until it has received a complete set of all required documentation of insurance coverage. However, failure to obtain the required documents prior to the work beginning shall not waive the Consultant's obligation to provide them. Consultant shall file with City:

- Certificate of Insurance, indicating companies acceptable to City, with a Best's Rating of no less than A:VII showing. The Certificate of Insurance must include reference to the scope of work and this Master Agreement.
- Documentation of Best's rating acceptable to the City.
- Original endorsements effecting coverage for all policies required by this Agreement.
- City reserves the right to obtain a full certified copy of any Insurance policy and endorsements. Failure to exercise this right shall not constitute a waiver of the right to exercise later.

13.3. **Coverage Amounts.** Insurance coverage shall be at least in the following minimum amounts:

• Professional Liability Insurance:	$2,000,000 per occurrence, $2,000,000 aggregate
• General Liability:	
• General Aggregate:	$2,000,000
• Products Comp/Op Aggregate	$2,000,000
• Personal & Advertising Injury	$2,000,000
• Each Occurrence	$2,000,000
• Fire Damage (any one fire)	$ 100,000
• Medical Expense (any 1 person)	$ 10,000

- Workers' Compensation:
  - Workers' Compensation — Statutory Limits
  - EL Each Accident — $1,000,000
  - EL Disease - Policy Limit — $1,000,000
  - EL Disease - Each Employee — $1,000,000

- Automobile Liability
  - Any vehicle, combined single limit — $1,000,000

Any available insurance proceeds broader than or in excess of the specified minimum insurance coverage requirements or limits shall be available to the City as additional insured. Furthermore, the requirements for coverage and limits shall be the greater of (1) the minimum coverage and limits specified in this Agreement, or (2) the broader coverage and maximum limits of coverage of any insurance policy or proceeds available to the named insured.

13.4. **General Liability Insurance.** Commercial General Liability Insurance shall be no less broad than ISO form CG 00 01. Coverage must be on a standard Occurrence form. Claims-Made, modified, limited or restricted Occurrence forms are not acceptable.

13.5. **Worker's Compensation Insurance.** Consultant is aware of the provisions of Section 3700 of the Labor Code which requires every employer to carry Workers' Compensation (or to undertake equivalent self-insurance), and Consultant will comply with such provisions before commencing the performance of the work of this Agreement. If such insurance is underwritten by any agency other than the State Compensation Fund, such agency shall be a company authorized to do business in the State of California.

13.6. **Automobile Liability Insurance.** Covered vehicles shall include owned if any, non-owned, and hired automobiles and, trucks.

13.7. P**rofessional Liability Insurance or Errors & Omissions Coverage.** If the Consultant is performing any surveying, engineering, architectural, or other design work for the project, Consultant shall provide proof of Professional Liability insurance in the amounts described above. The deductible or self-insured retention may not exceed $50,000, unless written approval is granted by the City for another amount. If the insurance is on a Claims-Made basis, the retroactive date shall be no later than the commencement of the work. Coverage shall be continued for two years after the completion of the work by one of the following: (1) renewal of the existing policy; (2) an extended reporting period endorsement; or (3) replacement insurance with a retroactive date no later than the commencement of the work under this Agreement.

13.8. **Claims-Made Policies.** If any of the required policies provide coverage on a claims-made basis the Retroactive Date must be shown and must be before the date of the contract or the beginning of contract work. Claims-Made Insurance must be maintained and evidence of insurance must be provided for at least five (5) years after completion

of the contract of work. If coverage is canceled or non-renewed, and not replaced with another claims-made policy form with a Retroactive Date prior to the contract effective date, the Consultant must purchase "extended reporting" coverage for a minimum of five (5) years after completion of contract work.

13.9. **Additional Insured Endorsements.** The City, its City Council, Commissions, officers, and employees of South Pasadena must be endorsed as an additional insured for each policy required herein, other than Professional Errors and Omissions and Worker's Compensation, for liability arising out of ongoing and completed operations by or on behalf of the Consultant. Consultant's insurance policies shall be primary as respects any claims related to or as the result of the Consultant's work. Any insurance, pooled coverage or self-insurance maintained by the City, its elected or appointed officials, directors, officers, agents, employees, volunteers, or consultants shall be non-contributory. All endorsements shall be signed by a person authorized by the insurer to bind coverage on its behalf. General liability coverage can be provided using an endorsement to the Consultant's insurance at least as broad as ISO Form CG 20 10 11 85 or both CG 20 10 and CG 20 37.

13.10. **Failure to Maintain Coverage.** In the event any policy is canceled prior to the completion of the project and the Consultant does not furnish a new certificate of insurance prior to cancellation, City has the right, but not the duty, to obtain the required insurance and deduct the premium(s) from any amounts due the Consultant under this Agreement. Failure of the Consultant to maintain the insurance required by this Agreement, or to comply with any of the requirements of this section, shall constitute a material breach of this Agreement.

13.11. **Notices.** Consultant shall provide immediate written notice if (1) any of the required insurance policies is terminated; (2) the limits of any of the required policies are reduced; (3) or the deductible or self-insured retention is increased. Consultant shall provide no less than 30 days' notice of any cancellation or material change to policies required by this Agreement. Consultant shall provide proof that cancelled or expired policies of insurance have been renewed or replaced with other policies providing at least the same coverage. Such proof will be furnished at least two weeks prior to the expiration of the coverages. The name and address for Additional Insured Endorsements, Certificates of Insurance and Notices of Cancellation is: City of South Pasadena, Attn: Risk Management, 1414 Mission Street, South Pasadena, CA 91030. Phone: (626) 403-7230.

13.12. **Consultant's Insurance Primary.** The insurance provided by Consultant, including all endorsements, shall be primary to any coverage available to City. Any insurance or self-insurance maintained by City and/or its officers, employees, agents or volunteers, shall be in excess of Consultant's insurance and shall not contribute with it.

13.13. **Waiver of Subrogation.** Consultant hereby waives all rights of subrogation against the City. Consultant shall additionally waive such rights either by endorsement to each policy or provide proof of such waiver in the policy itself.

13.14. **Report of Claims to City.** Consultant shall report to the City, in addition to the Consultant's insurer, any and all insurance claims submitted to Consultant's insurer in connection with the services under this Agreement.

13.15. **Premium Payments and Deductibles.** Consultant must disclose all deductibles and self-insured retention amounts to the City. The City may require the Consultant to provide proof of ability to pay losses and related investigations, claim administration, and defense expenses within retention amounts. Ultimately, City must approve all such amounts prior to execution of this Agreement.

City has no obligation to pay any premiums, assessments, or deductibles under any policy required in this Agreement. Consultant shall be responsible for all premiums and deductibles in all of Consultant's insurance policies. The amount of deductibles for insurance coverage required herein are subject to City's approval.

13.16. **Duty to Defend and Indemnify.** Consultant's duties to defend and indemnify City under this Agreement shall not be limited by the foregoing insurance requirements and shall survive the expiration of this Agreement.

14. MUTUAL COOPERATION

14.1. **City Cooperation in Performance.** City shall provide Consultant with all pertinent data, documents and other requested information as is reasonably available for the proper performance of Consultant's services under this Agreement.

14.2. **Consultant Cooperation in Defense of Claims.** If any claim or action is brought against City relating to Consultant's performance in connection with this Agreement, Consultant shall render any reasonable assistance that City may require in the defense of that claim or action.

15. NOTICES

Any notices, bills, invoices, or reports required by this Agreement shall be deemed received on: (i) the day of delivery if delivered by hand, facsimile or overnight courier service during Consultant's and City's regular business hours; or (ii) on the third business day following deposit in the United States mail if delivered by mail, postage prepaid, to the addresses listed below (or to such other addresses as the parties may, from time to time, designate in writing).

If to City	If to Consultant
H. Ted Gerber	David Niknafs, PE
City of South Pasadena	NV5, Inc.

1414 Mission Street
South Pasadena, CA 91030
Telephone: (626) 403-7240
Facsimile: (626) 403-7241

163 Technology Drive Suite 100
Irvine, CA 92618
Telephone: (949) 585-0477
Facsimile:

With courtesy copy to:

Roxanne Diaz, Esq.
South Pasadena City Attorney
Richards, Watson & Gershon
350 South Grand Avenue, 37th Floor
Los Angeles, California 90071
Telephone: (213) 626-8484
Facsimile: (213) 626-0078

16. SURVIVING COVENANTS

The parties agree that the covenants contained in paragraph 5.11 (Records), paragraph 10.4 (Indemnification of CalPERS Determination), Section 11 (Indemnity), paragraph 12.8 (Claims-Made Policies), paragraph 13.2 (Consultant Cooperation in Defense of Claims), and paragraph 18.1 (Confidentiality) of this Agreement shall survive the expiration or termination of this Agreement, subject to the provisions and limitations of this Agreement and all otherwise applicable statutes of limitations and repose.

17. TERMINATION

17.1. **City Termination.** City may terminate this Agreement for any reason on five calendar days' written notice to Consultant. Consultant agrees to cease all work under this Agreement on or before the effective date of any notice of termination. All City data, documents, objects, materials or other tangible things shall be returned to City upon the termination or expiration of this Agreement.

17.2. **Consultant Termination.** Consultant may terminate this Agreement for a material breach of this Agreement upon 30 days' notice.

17.3. **Compensation Following Termination.** Upon termination, Consultant shall be paid based on the work satisfactorily performed at the time of termination. In no event shall Consultant be entitled to receive more than the amount that would be paid to Consultant for the full performance of the services required by this Agreement. The City shall have the benefit of such work as may have been completed up to the time of such termination.

17.4. **Remedies.** City retains any and all available legal and equitable remedies for Consultant's breach of this Agreement.

18. INTERPRETATION OF AGREEMENT

18.1. **Governing Law.** This Agreement shall be governed and construed in accordance with the laws of the State of California.

18.2. **Integration of Exhibits.** All documents referenced as exhibits in this Agreement are hereby incorporated into this Agreement. In the event of any material discrepancy between the express provisions of this Agreement and the provisions of any document incorporated herein by reference, the provisions of this Agreement shall prevail. This instrument contains the entire Agreement between City and Consultant with respect to the transactions contemplated herein. No other prior oral or written agreements are binding upon the parties. Amendments hereto or deviations herefrom shall be effective and binding only if made in writing and executed on by City and Consultant.

18.3. **Headings.** The headings and captions appearing at the commencement of the sections hereof, and in any paragraph thereof, are descriptive only and for convenience in reference to this Agreement. Should there be any conflict between such heading, and the section or paragraph thereof at the head of which it appears, the language of the section or paragraph shall control and govern in the construction of this Agreement.

18.4. **Pronouns.** Masculine or feminine pronouns shall be substituted for the neuter form and vice versa, and the plural shall be substituted for the singular form and vice versa, in any place or places herein in which the context requires such substitution(s).

18.5. **Severability.** If any term or provision of this Agreement or the application thereof to any person or circumstance shall, to any extent, be invalid or unenforceable, then such term or provision shall be amended to, and solely to the extent necessary to, cure such invalidity or unenforceability, and shall be enforceable in its amended form. In such event, the remainder of this Agreement, or the application of such term or provision to persons or circumstances other than those as to which it is held invalid or unenforceable, shall not be affected, and each term and provision of this Agreement shall be valid and be enforced to the fullest extent permitted by law.

18.6. **No Presumption Against Drafter.** Each party had an opportunity to consult with an attorney in reviewing and drafting this agreement. Any uncertainty or ambiguity shall not be construed for or against any party based on attribution of drafting to any party.

19. GENERAL PROVISIONS

19.1. **Confidentiality.** All data, documents, discussion, or other information developed or received by Consultant for performance of this Agreement are deemed confidential and Consultant shall not disclose it without prior written consent by City. City shall grant such consent if disclosure is legally required. All City data shall be returned to City upon the termination or expiration of this Agreement.

19.2. **Conflicts of Interest.** Consultant maintains and warrants that it has not employed nor retained any company or person, other than a bona fide employee working solely for Consultant, to solicit or secure this Agreement. Further, Consultant warrants that it has not paid nor has it agreed to pay any company or person, other than a bona fide employee working solely for Consultant, any fee, commission, percentage, brokerage fee, gift or other consideration contingent upon or resulting from the award or making of this Agreement. Consultant further agrees to file, or shall cause its employees or sub-consultant to file, a Statement of Economic Interest with the City's Filing Officer if required under state law in the performance of the services. For breach or violation of this warranty, City shall have the right to rescind this Agreement without liability. For the term of this Agreement, no member, officer, or employee of City, during the term of his or her service with City, shall have any direct interest in this Agreement, or obtain any present or anticipated material benefit arising therefrom.

19.3. **Non-assignment.** Consultant shall not delegate, transfer, subcontract or assign its duties or rights hereunder, either in whole or in part, without City's prior written consent, and any attempt to do so shall be void and of no effect. City shall not be obligated or liable under this Agreement to any party other than Consultant.

19.4. **Binding on Successors.** This Agreement shall be binding on the successors and assigns of the parties.

19.5. **No Third-Party Beneficiaries.** Except as expressly stated herein, there is no intended third-party beneficiary of any right or obligation assumed by the parties.

19.6. **Time of the Essence.** Time is of the essence for each and every provision of this Agreement.

19.7. **Non-Discrimination.** Consultant shall not discriminate against any employee or applicant for employment because of race, sex (including pregnancy, childbirth, or related medical condition), creed, national origin, color, disability as defined by law, disabled veteran status, Vietnam veteran status, religion, age (40 and above), medical condition (cancer-related), marital status, ancestry, or sexual orientation. Employment actions to which this provision applies shall include, but not be limited to, the following: employment, upgrading, demotion, or transfer; recruitment or recruitment advertising; layoff or termination; rates of pay or other forms of compensation; or in terms, conditions or privileges of employment, and selection for training. Consultant agrees to post in conspicuous places, available to employees and applicants for employment, the provisions of this nondiscrimination clause.

19.8. **Waiver.** No provision, covenant, or condition of this Agreement shall be deemed to have been waived by City or Consultant unless in writing signed by one authorized to bind the party asserted to have consented to the waiver. The waiver by City or Consultant of any breach of any provision, covenant, or condition of this Agreement shall not be deemed to be a waiver of any subsequent breach of the same or any other provision, covenant, or condition.

19.9. **Excused Failure to Perform.** Consultant shall not be liable for any failure to perform if Consultant presents acceptable evidence, in City's sole judgment, that such failure was due to causes beyond the control and without the fault or negligence of Consultant.

19.10. **Remedies Non-Exclusive.** Each right, power and remedy provided for herein or now or hereafter existing at law, in equity, by statute, or otherwise shall be cumulative and shall be in addition to every other right, power, or remedy provided for herein or now or hereafter existing at law, in equity, by statute, or otherwise. The exercise, the commencement of the exercise, or the forbearance from the exercise by any party of any one or more of such rights, powers or remedies shall not preclude the simultaneous or later exercise by such party of any or all of such other rights, powers or remedies.

19.11. **Attorneys' Fees.** If legal action shall be necessary to enforce any term, covenant or condition contained in this Agreement, the prevailing party shall be entitled to an award of reasonable attorneys' fees and costs expended in the action.

19.12. **Venue.** The venue for any litigation shall be Los Angeles County, California and Consultant hereby consents to jurisdiction in Los Angeles County for purposes of resolving any dispute or enforcing any obligation arising under this Agreement.

TO EFFECTUATE THIS AGREEMENT, the parties have caused their duly authorized representatives to execute this Agreement on the dates set forth below.

"City"	"Consultant"
City of South Pasadena	**NV5, Inc.**
By:_____	By:_____
Signature	*Signature*
Printed:_____	Printed: Jeffrey M. Cooper
Title:_____	Title: EVP/COO

Date:_____ Date: 01/06/2025

Attest:

By:_____
Mark Perez, Deputy City Clerk

Date:_____

Approved as to form:

By:_____
Roxanne Diaz, City Attorney

Date:_____

EXHIBIT A

"Scope of Services"

Consultant: NV5, Inc.

Sub-Consultant: Pacific Resources Services (PRS)

Scope:

Civil Design Engineering Services

a. Perform civil engineering services signed and stamped by a registered Professional Civil Engineer in the State of California, for the stated services on an "on-call as needed" basis for various civil engineering projects in the public right-of-way such as street, water, sewer, storm drain, streetlight, buildings and facilities, parks or other projects as assigned by the City.
b. Perform design work for repair, rehabilitation, or other related street improvements, including plan preparation, geometric design, drainage design, pavement delineation, surveying, stormwater pollution prevention plan (SWPPP), and signage and striping plans for street, highways, minor structures, and other public infrastructure.
c. Provide design services for City projects to prepare plans and specifications for City projects, including but not limited to streets, buildings and facilities, trails, landscaping, park design, traffic signal installations or modifications, water systems, storm drain and sewer improvements, upgrades, modifications, extensions, repair or rehabilitation, and other related improvements.
d. Prepare project technical provisions and detailed cost estimates.
e. Provide engineering support services construction assistance.
f. See also: (5) Public Works and Development Land Use, Subdivision Control, Map and Plan Check Services, (6) Traffic/Transportation Engineering Services, (9) Computer Aided Drafting (CAD) Design Services, and (11) Program & Project Management Services.

Structural Design Engineering Services

a. Structural engineering design services include bridges, walls, storm drains, and other Public Works structural facilities, where seismic analysis, structural calculations, design, plan, evaluation of structural components and structural systems to ensure the safety and comfort of users or occupants is conducted.
b. Consultant must be registered in the State of California as a professional structural engineer for work requiring a structural engineer's seal, and provide experienced personnel, equipment and facilities to perform tasks. Civil

engineers registered in the State of California may perform structural engineering work allowed by the California Business and Professions Code.

c. Assess structural stability and load bearing capacity of existing structures including areas proposed to be modified or used for additional loads.
d. Provide structural design for new structures or modifications of existing structures.
e. Provide alternative structural layouts or options that can be applied to project requirements.
f. Provide technical memorandum on assessment of structures.
g. Provide complex structural analyses using computer programs for complex projects.
h. Provide technical specifications for selection of materials and methods.
i. Provide seismic and wind design review of existing structures.
j. Provide detail design of concrete slabs, retaining wall, foundations, floor plans, roofing and framing plans, and pipe and equipment support and anchorage, for operation, maintenance, and administrative facilities.
k. Participate in peer review and value engineering of structural design completed by other consultants.
l. Prepare construction cost estimates.
m. Provide structural engineering support during bidding and construction of projects.
n. Provide record drawings.
o. See also: (19) Seismic and Structural Examination Services.

Facility Design Engineering Services

a. Perform mechanical, electrical, and plumbing engineering design services signed and stamped by a qualified registered Professional Engineer, including design for repair, remodeling, or upgrading City's facilities such as Library, Senior Center, Police Station, Fire Station, Recreation/Community Service Buildings, Corporate Yards, City Hall, Parks, or other facilities per City request in compliance with current applicable building codes:
    i. Mechanical engineering design services include HVAC system, heating, cooling, ventilation, smoke control and exhaust system.
    ii. Electrical engineering design services include solar power, power supplies, distribution, conduit/wiring, back-up generators, batteries, electric vehicle chargers, switches, transformers, appliances, lighting, fire alarms, signal systems, arc flash studies, electrical calculations for short circuits, voltage drop, etc.
    iii. Plumbing engineering design services include hot and cold water systems, water heaters, fire suppression systems, and wastewater systems.

b. Design services include: performing concept and feasibility studies of project alternatives; preparing preliminary design reports; preparing plans, specifications, estimates (opinions of construction cost) and other design related documents; providing drafting and computer aided drafting support; preparing and processing permit applications for building, various regulatory, and environmental permits.; performing record drawing, utility, or other searches; performing field investigations; performing engineering design services; reviewing and recommending award of construction contracts; utility coordination; providing design services during construction, including periodic site visits, review of shop drawings, and preparing responses to contractor's requests for information (RFIs), preparing record ("as built") drawings; and attending project or coordination meetings as necessary.

Public Works and Development Land Use, Subdivision Control, Map and Plan Check Services

a. Coordinate the intake and processing of development project plans, specifications, tentative maps, final maps, land use applications, and other development related submittals, and review for completeness.
b. Manage, coordinate, and schedule with City staff, consultants, utilities, and private and public entities to perform required reviews.
c. Review, assess, document, and organize all existing active development projects by location, project type, and project status.
d. Review, check and make recommendations regarding land use applications.
e. Perform review of parcel maps, tract maps, tentative maps, final maps, easements, lot line adjustments, and parcel mergers.
f. Perform review of studies and reports such as sewer, drainage, and Water Quality Management Plans (WQMP) utilizing commonly used software programs and Los Angeles County Hydrology and Local Drainage Manuals.
g. Perform mapping and prepare legal descriptions for right-of-way acquisitions, easements, and vacations.
h. Perform review of engineering quantity estimates and costs, rough and precise grading improvement plans, erosion control, geological and geotechnical reports, storm drain improvement plans, hydrology and hydraulics reports, landscape plans, federally and state mandated reports required under National Pollutant Discharge Elimination System (NPDES) and Air Quality Management District (AQMD) guidelines, utility plans, (including domestic and sanitary sewer improvements), street improvement plans, signing and striping plans, traffic signal plans, and traffic studies and reports.

i. Review tentative maps and other developments and provide recommendations related to engineering and water pollution reduction.
j. Review plans for consistency with other planned developments.
k. Prepare plan check comments in concise and understandable manner.
l. Recommend, draft, and issue conditions of approval and plan reviews for development, including off-site improvements and financial obligations.
m. Application of requirements related to the City's Southwest Monterey Hills Construction Regulations.
n. Establish bond amounts, determine financial obligations and other development fees within the proper sequence of development reviews;
o. Perform additional functions, including, but not limited to, the preparation of general correspondence and staff reports, and coordination with developers, engineers, staff, and the general public related to the engineering review of private developments.
p. Assist with development of engineering design standards and guidelines to assist with the plan checking process
q. Prepare Staff reports for City Council, and attend City Council and other city meetings as required.
r. Prepare and update policies and procedures for land development project reviews.
s. Provide public works and development land use, subdivision control, map and plan check services signing and stamping by a registered Professional Civil Engineer in the State of California.

Traffic/Transportation Engineering Services

a. Provide consulting services related to parking management, traffic counts, traffic modeling, signal timing, development and review of traffic studies, development and review of traffic impact analysis reports (utilizing City's traffic impact analysis methodology), and preparation of reports and/or scopes of work.
b. Provide consulting services related to development and review of level of service (LOS) analyses and vehicle miles traveled (VMT) analyses.
c. Provide consulting services related to engineering studies of traffic conditions, pedestrian characteristics, and physical characteristics related to the installation of a traffic control signals or other traffic/pedestrian devices.
d. Provide traffic engineering and transportation design support for the preparation of preliminary and final plans and specifications for all types of traffic and intelligent transportation system (ITS) projects, signed and stamped by a registered Professional Traffic Engineer or Civil Engineer in the State of California, including but not limited to: traffic signals (LED displays, mast

arm designs, etc.), vehicle detection system (video, loop, microwave, radar, ultrasonic, etc.), interconnect systems (hardware, phone, cellular phone, spread spectrum, radio, etc.), pavement markings (tape, thermoplastic, water based, etc.), sign and sign support systems (wood, metal and composite systems), intelligent transportation systems devices (variable message boards, closed circuit television, fiber optics and other communications media etc.), intersection designs (simple lane additions, signalizations, continuous flow intersections, diverging diamonds, and round-a-bouts), preliminary surveys for designs, sign layouts, guardrail designs, roadway re-striping and roadway design, calculation of quantities and estimates for plans, fiber optic networking drawings and fiber optics splicing plans, ITS Network plans for interconnection to Traffic Management Centers, and ITS Network Support Plans.

e. Prepare construction and maintenance related signing plans and schedules.
f. Conduct accident analyses needed for consideration of safety measures in the designs and planning of transportation projects.
g. Perform individual signal timing plans, corridor signal timing progression plans and optimization plans.
h. Provide miscellaneous services regarding traffic operations to assist with the City's day to day operations, including advisement and recommendations on traffic and transportation related matters.
i. Develop conceptual phased construction plans considering geometric design, capacity analysis, construction signing, temporary guide signing, temporary pavement markings, temporary signal design, and optimization of traffic flow.
j. Prepare freeway guide signing plans consistent with the Federal Highway Administration Manual on Uniform Traffic Control Devices (MUTCD) and the City's policies. Prepare sign bridge plans, specialized sign support details, sign plans and sign layouts.
k. Provide railroad crossing design and coordination services.
l. Provide technical assistance and reports related to traffic engineering and ITS issues, including assisting the City in procuring ITS telecommunications/network related hardware, software and pertinent materials.
m. Develop plans and specifications for City ITS and telecommunications/network related projects or tasks including developing network, software and hardware design and procurement, fiber assignments, fiber design and all pertinent studies, reports, drawings, diagrams, specifications, and manuals both in hard and electronic formats.
n. Provide corridor-planning analysis for future fiber optic backbone implementations including determining future node points for ITS elements,

number of fiber strands required for future implementations, and best practices to facilitate private/public partnerships to build the fiber backbone.

o. Train City personnel on use of specialized traffic, transportation engineering and telecommunications/network related software in addition to any training requested.
p. Provide structural inspection and report of Traffic Signal poles and mast arms, ITS structures and sign structures.
q. Provide construction management, inspection and completion of appropriate City documents as required, including ITS construction and field management.
r. Conduct traffic signal and traffic device needs studies and develop reports, related to speed, progression, congestion, incidents, removal of vehicles, etc.
s. Conduct vehicular and pedestrian/bicyclist traffic volume count studies and develop reports as needed for design and operations analysis.
t. Collect, analyze, and summarize transportation related field observations and data from reporting sources, including but not limited to City collision/incident data, California Statewide Integrated Traffic Records System (SWITRS), etc.
u. Conduct traffic signal warrant analyses and develop reports.
v. Provide technical support and training on various travel demand and traffic operations models including, but not limited to VISSIM, CORSIM, SYNCHRO, and HCS.
w. Provide Active Transportation Program consulting and design services that promote pedestrian, biking/cycling, and transit travel, placemaking, sustainability, community economic benefits, and promote healthy lifestyles.
x. Provide transportation modeling services, including level of service (LOS), vehicle miles traveled (VMT), and other progressive modeling techniques.
y. Provide consulting service on street and transportation design, transportation networks, placemaking, modeling, transit, and other transportation related concepts.
z. Provide traffic and transportation public engagement and outreach services. Attend meetings as instructed, prepare visual aids for meetings as needed, and prepare letters of correspondence and meeting minutes.

Geographic Information Systems (GIS) Support Services

a. Maintain and edit GIS datasets/layers.
b. Create new datasets and GIS maps.
c. Create, update, and print GIS maps
d. Assist City with in house production of map documents.
e. Advise the City on matters relating to GIS projects and software.
f. Maintain and keep records of GIS-related software and software licenses.

g. Create, customize, and maintain GIS related web pages.
h. Create, customize, and maintain databases.
i. Work with Los Angeles County to acquire GIS and Assessor updates.
j. Print large format maps.
k. Obtain GIS data as needed from other sources.
l. Provide customized solutions for special projects as requested.
m. Providing GIS technical assistance and training to staff.

Computer Aided Drafting (CAD) Design Services

a. Develop concept designs.
b. Prepare construction documents including plans, specifications, and estimates.
c. Assist with required state and federal documentation for design work associated with state or federal funded construction projects.
d. Provide plan check and/or peer review per City standard details and specifications.
e. Prepare project drawings in CAD.
f. Provide constructability reviews.
g. Provide construction services.
h. Anticipated project types include, but not limited: street improvement projects, bike and pedestrian facilities (bike lanes, pedestrian paths, multipurpose trails), preliminary engineering in support of grant applications, traffic related projects including traffic signal design, signage and marking, MUTCD compliance, street light design, drainage Improvement projects: alternate drainage, reclaimed water pipeline, recycled water related planning and design, etc., intersection modifications, and sidewalk improvement projects (ADA compliance).

Surveying Services

a. Perform surveys conforming to the requirements of the Land Surveyors Act and Caltrans Survey manual.
b. Provide design, construction, and as-built surveys, preparation of legal description and plat maps, monument preservation/recordation and other surveying services.
c. Establish horizontal and vertical control bases using benchmarks and datum that is common for Los Angeles County Cities.
d. Perform aerial photogrammetry.
e. Use aerial photogrammetry or field survey data to prepare base maps.
f. Prepare topographic maps with elevations contours and spot elevations shown.

g. Research and provide on maps and surveys street centerlines and right-of-way boundaries.
h. Survey and prepare plats and legal descriptions with sketches for easement and property acquisition and lot line adjustments.
i. Provide surveys to support geotechnical investigations, utility locating, and the design of water, reclaimed water, water reclamation, streets, site developments, and electrical systems.
j. Reset survey monuments disturbed or removed during construction and identify the hours separately on work performed.
k. Provide field staking and cut sheets for construction projects.

Environmental Consulting and Document Services

a. Provide consulting and document development services for environmental feasibility studies, CEQA & NEPA documents, development applications, mitigation monitoring preparation and compliance.
b. Provide agency coordination, team management, quality assurance reviews, and public engagement and outreach.
c. Provide complete environmental planning and document preparation in accordance with CEQA and NEPA requirements, special studies such as but not limited to noise, socioeconomic, biological, cultural, air quality, Phase I site assessments, hazardous waste, archaeological, historical, and tribal consultation, as needed on a project specific basis as required by the City and/or Caltrans. Typical project to include CIP projects, road widening, new construction, rehabilitation projects, storm drain, signal installations, reservoirs, booster stations, projects in Caltrans right-of-way, and water and sewer installations.
d. Provide environmental document development services including but not limited to preparation of: maps for environmental evaluation, public and agency scoping, noise studies, noise abatement reports, air quality studies and reports, initial site assessments, natural environmental study reports, cultural resource studies, potential effect identification reports, Native American consultation reports, visual/aesthetic evaluation reports, community impacts assessment reports, climate change analysis/assessment reports, cumulative impacts analysis reports, location hydraulic/flood plain reports, paleontology studies, draft environmental documents, responses to review comments, final environmental documents, and environmental commitments records.

Environmental Monitoring Services

a. Noise sampling collection;
b. Ambient air samples collection;
c. Storm water sampling and laboratory analysis;
d. Surface water sampling and laboratory analysis;
e. Groundwater sampling and laboratory analysis;
f. Potable water sampling and laboratory analysis;
g. Soil fertility, soil ecology, and flora ecology sampling and analysis; and
h. Preparation of reports describing in detail the sampling efforts, laboratory results, data, quality assurance/quality control, and results.

Sustainability, Electrical, Solar, and Energy Design and Assessment Services

a. Provide consulting services in energy conservation measures.
b. Provide consulting services on heating ventilation & air conditioning (HVAC) system optimization, retrofit, upgrade or replacement.
c. Provide consulting services on interior and exterior lighting retrofit or replacement.
d. Provide consulting services on outside, street, and area lighting retrofit or replacement.
e. Provide consulting services on open standards wireless platform and applications to control, dim, monitor, and help maintain street lighting LED retrofit investments, and enable a platform for future City applications such as parking, automated meter reading, charging stations, traffic, etc.
f. Provide consulting services Building Automation System (BAS) installation, upgrade, or expansion leveraging existing technology.
g. Provide consulting services building envelope upgrades.
h. Provide consulting services infrastructure improvements that reduce energy and/or reduce operating costs.
i. Provide consulting services on project, design, installation, purchase, and construction financing sources and solutions.

j. Provide consulting services on electrical vehicle (EV) and EV charging solutions, including, but not limited to, use and site assessment, rebate and financial planning, owner agreements, EV purchase and use, EV supply equipment (EVSE) purchase and installation.
k. Provide consulting services on EV charging infrastructure design, equipment selection, installation, construction, operation, maintenance, network infrastructure, equipment applications, mobile applications, payment

gateways, administration, power management, energy rate requirements and selection, station management, customer management, site management, driver management, radio-frequency identification (RFID) fob management, access control roles, pricing management, and EV fleet management.

l. Analyze energy interval data, examine load profiles and seasonal variations to identify potential storage capacity and energy values.
m. Analyze potential load impacts from EV charging, and provide recommendations.
n. Develop solar modeling and rendering using a software (e.g. Helioscope), and build energy model to test and evaluate scenarios, pricing, storage amounts, and rate options.
o. Provide site assessment services verifying solar array, meter, and backup battery storage locations, assessing shading construction impacts, switchgear and other solar, electrical and/or battery backup equipment.
p. Provide other training, remote monitoring services, or other related support services.
q. Perform comprehensive investment-grade audits of City facilities and infrastructure, identifying and analyzing all opportunities for water and energy cost savings, including, but not limited to, buildings, parks, water facilities, and city-owned streetlights.
r. Perform comprehensive feasibility analyses of distributed generation opportunities for City facilities, including solar photovoltaics (PV) and solar arrays, and any other economically and environmentally viable distributed generation (DG) solutions.
s. Analyze and report on energy efficiency (electricity and natural gas) and water usage at all City facilities, providing an analysis of building systems, equipment, operations, and operational procedures for optimal performance, include the following thorough assessments: existing equipment; equipment replacement, repair, or rehabilitation; potential alternative processes; proposed energy and water efficiency and conservation projects; equipment controls; lighting (internal/external for buildings/parks and remaining non-LED street lights); HVAC equipment; well equipment; automation; space utilization and programming; pumps; non-computerized irrigation systems controllers; building envelope performance with evaluation for cooling/heat gain or loss, transmission and leakage, and solar potential, alternative fuel sources, and identifying facility or occupancy changes that could affect energy/water use.
t. Review historical data of existing energy usage, meet with the facilities' staff, tour the facilities, and identify all major lighting, HVAC equipment and systems, determining occupancy schedules, energy use patterns, etc.

u. Prepare reports, present findings and address questions for City and at public meetings.

Construction Management, Administration, and Monitoring Services

a. Provide services from a construction manager with a minimum of five (5) years of experience managing public works construction and private construction, including construction of streets, sidewalks, curb and gutter, underground and aboveground utilities, storm drains, buildings, and other projects.
b. Provide services from a resident engineer by a registered Professional Civil Engineer in the State of California, for the stated services on an "on-call as needed" basis for various civil engineering projects as assigned by the City.
c. Provide complete construction management, construction administration, inspection services and labor compliance for Capital Improvement Program (CIP) projects and private land development projects, including but not limited to project scheduling, project controls, project management, collaboration and claims resolution, daily reports and capturing photos, Contractor's labor force compliance monitoring, inspection/monitoring of traffic control procedures and traffic control plan, conducting progress meetings and preparing meeting minutes, coordinating with agencies and stakeholders, monitoring the project schedule, verifying quantities, and assuring quality control, and site safety.
d. Maintain complete and accurate project records, including monthly progress pay estimates, daily construction reports, extra work reports, contract change orders, labor and equipment records, correspondence, personnel records, records verifying stormwater pollution prevention plan (SWPPP) compliance, processing submittals of requests for information (RFIs), weekly statement of working days, change orders, punch-lists, and as-builts.
e. Maintain compliance of project records in compliance with the Caltrans manual, safety-related activities, implementing security procedures, coordinating survey and materials testing, as well as processing control documents, submittals, RFIs, weekly statement of working days, change orders, work change directives, , and compliance with NPDES and Caltrans encroachment permit requirements, if required
f. Attend pre-construction meetings, project progress meetings, and provide assistance in responding to all questions in timely manner.
g. Assist City in conducting and coordinating field meetings with contractors and act as the City's liaison for coordination and communication with other agencies, engineers, and architects as needed. Coordinate with design

engineers and project managers on design issues encountered during construction.

h. Review project contract documents and perform constructability reviews.
i. Review contractor's submittals in accordance with the requirements of project specifications and the City's requirements prior to final approval.
j. Review, negotiate, process and monitor contract change orders with the City's approval. Review extra work invoices.
k. Review and respond to RFIs in a timely manner.
l. Comply with grant requirements for local, state, and federal funded projects.
m. Provide labor compliance monitoring.
n. Provide construction inspection and quality control services.
o. Provide construction material testing and compaction testing.
p. Developing solutions to problems identified in the field with City approval.
q. Maintain all records and meet reporting requirements.
r. Provide community outreach and public outreach services as required.
s. Provide project status and overall condition of construction projects, including cost, budget, and schedule.
t. Identify and issue notice to contractor of safety concerns and violations.
u. Review and approve punch lists.
v. Participate and assist in conducting final inspection, testing and release of facilities.
w. Review and approve record drawings at project completion.
x. Assist in preparation of daily pay estimates in accordance with the inspection daily report, and assist in preparation of contractors monthly pay estimates.
y. Report all unresolved issues and potential claims to the City's representative in writing on a daily basis.
z. Other construction management duties as necessary to support City projects in construction.

Inspection Services

a. Provide inspection services from an inspector with a minimum of five (5) years of experience inspecting public works construction and private construction, including construction inspection of streets, sidewalks, curb and gutter, underground and aboveground utilities, storm drains, buildings, and other projects.
b. Review plans and specifications, and provide construction inspection/ observations for development projects related to the public right-of-way.
c. Observe construction of improvements by developers and/or contractors and make recommendations regarding completion and acceptance of the work.

d. Provide construction observations associated with work performed by developers on City streets, medians, slopes, parks, and other areas to ensure compliance with approved plans, specifications, permits, and City guidelines and standards.
e. Inspect plants and trees and make recommendations on acceptance of the plant materials.
f. Inspect landscape and irrigation improvements for compliance with approved plans.
g. Ensure that materials and completed work comply with plans, specifications, and design criteria.
h. Provide inspection services from an inspector with a minimum of five (5) years of experience inspecting public and private construction, and certification as a Qualified Stormwater Practitioner (QSP).
i. Inspect and provide recommendations for the installed Best Management Practices (BMP) for water quality.
j. Inspect street and storm drain improvement for compliance with approved plans.
k. Inspect approved work and installed water quality measures.
l. Prepare general correspondence and daily construction inspection reports, and coordinate with developers, engineers, staff, and the public.

Seismic and Structural Examination Services

a. Conducted by a Structural Engineer licensed by the State of California.
b. Provide detailed analysis accompanied by calculations, and an evaluation of mitigating alternatives.
c. Provide detailed structural and seismic analysis, based on the collected documentation, examination findings, geotechnical evaluation, demand and capacity calculations, and any other reviewed or collected data and information.
d. Provide analysis including a conclusive evaluation of repair, rehabilitation, and replacement alternatives for subject structure including inspected internal and external components, as well as alternative prioritization and recommendations (considering a short-term, mid-term, and long-term asset improvement life cycle).
e. Perform supporting structural and seismic design and capacity calculations.
f. Perform load to capacity calculations.

Material Testing and Geotechnical Engineering Services

a. Perform sub-surface exploration and material testing in accordance with City standards and/or Caltrans standards for street, facility, and other capital improvements.
b. Conduct geotechnical examinations of selected sites, based on data and observations collected from soil boring(s), including an evaluation of subsurface conditions, soil classification and relevant attributes (moisture content, compressive strength, etc.), settlement, bearing capacity / resistance, seismic considerations, and any other related concerns.
c. Provide comprehensive geotechnical reports including calculations and analysis of the subsurface profile and its impact on the seismic stability and structural integrity of the reservoir.
d. Perform building materials testing including welding on structural steel elements in accordance with current building standards and provide geotechnical services for all projects.
e. Perform source inspection of miscellaneous items and fabricated products such as steel girders, concrete girders and welded sign structures used on the State highway system.
f. Review material submittals for compliance with project specifications and applicable standards and regulations.
g. Perform background review of sites based on published and unpublished groundwater and geologic information.
h. Provide preliminary evaluation of seismic hazards and design parameters using fault maps and current building code.
i. Provide field exploration including drilling, sampling, and logging of test borings.
j. Perform geologic field mapping.
k. Perform soil analysis, soil classification, and site-specific soil characterization.
l. Provide recommendations on soil improvement.
m. Perform ground water investigation and control.
n. Provide design parameters for: Grading; Remedial measures; Shoring; Excavation; Backfill; Compaction; Slope stability; Soil bearing pressure; Foundation design, Lateral earth pressures for design of retaining walls; Groundwater dewatering.
o. Provide settlement evaluation and analyze potential for expansion.
p. Provide soil corrosivity testing and analysis, Evaluate imported earth materials to be used for fill.

q. Provide laboratory testing per City and Caltrans standards to determine maximum dry density and optimum moisture content for fill and backfill, and sand equivalent of all bedding material.
r. Perform laboratory tests on pipe bedding material and aggregate base material to verify their compliance with the project specifications.
s. Evaluate over-excavation, backfill, and compaction procedures.
t. Evaluate field procedures, progress, and testing results.
u. Observe site grading and fill placements, including in-place soil density testing of compacted fill, optimum soil moisture density test and relative compaction per project specifications.
v. Provide foundation engineering and inspection for structures; Inspect and evaluate earth-retaining structures and excavations.
w. Perform sieve analysis; Determine R-value; Pavement inspection and testing including preparation of pavement structural section based upon laboratory R-value, sieve analysis, and sand equivalent testing;
x. Perform concrete inspection and testing including air content and slump testing; Prepare standard test cylinders for concrete and provide laboratory compressive strength testing;
y. Attend meetings throughout the duration of the project as needed to provide technical advice on issues, project schedule, cost control and other related matters.
z. Prepare reports to include: description of field procedures, tabulation of daily field compaction test data, laboratory data, conclusions and recommendations. Provide reports bearing the Registered Professional Engineer Seal with the signature and license number of the geotechnical engineer responsible for preparation of the report.

Stormwater, Flood Plain, and Hydrogeological Engineering Services

a. Planning and design of water resources projects related but not limited to: the capture, retention and direct use of stormwater and surface water; groundwater recharge; multi-purpose watershed management facilities; low impact development (LID) measures; engineered wetlands for stormwater treatment; landscaping that utilizes native and other plant species for stormwater treatment and carbon sequestration; and stream and upland habitat creation and restoration.
b. Engineering assistance with construction, monitoring, and operations and maintenance.
c. Engineering assistance with National Pollutant Discharge Elimination System (NPDES) related programs.
d. Preparation of hydrology and hydraulic analysis and reports.

e. Preparation of Water Quality Management Plans (WQMP), Stormwater Pollution Prevention Plans (SWPPP), or related NPDES documents/reports.

Building and Facility Assessment Services

a. Prepare comprehensive facility assessment studies that include survey, inspection, inventory of building components, assessment of the existing conditions, corrective recommendations, preventative maintenance recommendations, budget estimates and timeline for all corrective work and preventative maintenance for all City Facilities.
b. Assess and provide recommendations on building envelopes, including condition of the outer shell of the building including walls, doors, windows and roofs.
c. Assess and provide recommendations on structural integrity, including walls and foundations.
d. Assess and provide recommendations on interior walls, ceilings, signage, paint, wall coverings, flooring and casework.
e. Assess and provide recommendations on mechanical systems, HVAC, exhaust, ventilation and controls.
f. Assess and provide recommendations on electrical systems, both interior and exterior, including distribution and lighting.
g. Assess and provide recommendations on plumbing systems, both interior and exterior.
h. Assess and provide recommendations on elevator systems.
i. Assess and provide recommendations on life safety and security systems, including adequacy of security for intended uses.
i. Assess and provide recommendations on Americans with Disabilities Act (ADA) Accessibility, both interior and exterior.
j. Assess and provide recommendations on preventative maintenance programs, requirements, or recommendations.
k. Assess and provide recommendations on sustainability components such as solar and alternative energy.
l. Assess and provide recommendations on space planning and present/future functional use of facilities.
m. Assess and provide recommendations on energy usage, perform energy audits.

n. Provide recommendations for environmental abatement, including, but not limited to lead/asbestos.
o. Assess and provide recommendations on in accordance with the latest versions of the California Building Standards Code.

p. Assess and provide recommendations on in accordance with the requirements of the Secretary of the Interior Design Standards and local Historic Preservation Guidelines.

Assessment District Services

a. Obtain all available information from the City regarding the district, including the current assessment databases, electronic map files from the City, a listing of projected expenditures and revenues and any additional information. Update the current database files with the latest Assessor's parcel numbers and land use information.
b. Review district budgets and confirm schedule; attend the City Council meetings considering the Resolutions of Intention and the public hearing, and provide technical support and answer questions.
c. Prepare the assessment report setting the annual assessment rates for the next fiscal year based on budget estimates from City. Furnish electronic copies of the draft reports and preliminary assessment rolls for review and comment.
d. Prepare assessment Rolls in electronic format, as required by the County Auditor-Controller for inclusion of assessments on the property tax bills. Submit the rolls to the County and, after receipt of the County's exception report, make any required corrections.

EXHIBIT B

"Approved Fee Schedule"

FEE PROPOSAL/SCHEDULE

Fee Schedule

Rates are effective through the initial term of the contract. After this time, NV5 may request a rate increase not to exceed the current Consumer Price Index (CPI).

NV5

ENGINEERING SERVICES (CATEGORIES 1, 2, 5, 6, 9, 19)	HOURLY RATE**
Principal	$230
Senior Project Manager	$205
Project Manager	$185
Quality Assurance Manager	$185
Senior Engineer	$165
Project Engineer	$140
Assistant Engineer	$130
Traffic Engineer	$225
Designer	$120
Plan Check Engineer III	$185
Plan Check Engineer II	$165
Plan Check I	$135
Engineering Technician	$90
CADD Drafter	$90
Administration	$90
CONSTRUCTION SERVICES (CATEGORIES 16, 17)	**HOURLY RATE****
Senior Construction Manager	$185
Construction Manager	$165
Senior Office Engineer	$140
Office Engineer	$120
Senior Construction Inspector (Prevailing Wage)*	**$159**
Construction Administration	$90
SURVEY TECHNICAL SERVICES (CATEGORIES 8, 10)	**HOURLY RATE****
Engineering Aide/Planning Aide	$89
Project Assistant	$95
Project Administrator	$110
CADD Technician I	$115
CADD Technician II	$126
CADD Technician III	$149
Sr. CADD Technician/Designer	$160
Design Supervisor	$163
GIS Technician I	$110
GIS Analyst	$149

Fee Schedule

Rates are effective through the initial term of the contract. After this time, NV5 may request a rate increase not to exceed the current Consumer Price Index (CPI).

SURVEY PROFESSIONAL SERVICES (CATEGORIES 8, 10)	HOURLY RATE**
Junior Engineer/Planner/Scientist/Surveyor	$131
Assistant Engineer/Planner/Scientist/Surveyor	$149
Associate Engineer/Planner/Scientist/Surveyor	$168
Senior Engineer/Planner/Scientist/Surveyor	$184
Manager	$236
Associate	$247
Principal	$275
FIELD SURVEY (CATEGORIES 8, 10)	**HOURLY RATE****
1-Person Survey Crew*	$185
2-Person Survey Crew*	$315
3-Person Survey Crew*	$385
AUDIOVISUAL, ELECTRICAL, FIRE PROTECTION, MECHANICAL, PLUMBING, SECURITY CONSULTING AND DESIGN SERVICES (CATEGORIES 3, 15, 24)	**HOURLY RATE****
Sr. Principals	$300
Principals	$275
Directors	$250
Associate Directors	$225
Sr. Managers	$200
Sr. Engineer/Manager	$175
Sr. Project Manager/Sr. Consultant	$160
Project Manager/Engineer/Consultant	$130
Sr. Designer/Sr. Engineer Assistant	$100
Designers/Engineer Assistant	$90
Sr. Drafter/CADD Operator	$85
Drafter/CADD Operator	$65
Administrative	$65
ENVIRONMENTAL - GEOLOGISTS, HYDROGEOLOGISTS, ENGINEERS, INDUSTRIAL HYGIENISTS, SCIENTISTS + SUPPORT PERSONNEL (CATEGORIES 12, 13, 21)	**HOURLY RATE****
Senior Principal	$240
Principal	$230
Senior III	$205
Senior II	$195
Senior I	$185

Fee Schedule

Rates are effective through the initial term of the contract. After this time, NV5 may request a rate increase not to exceed the current Consumer Price Index (CPI).

Staff III	$170
Staff II	$165
Staff I	$155
Associate III	$145
Associate II	$135
Associate I	$125
Specialist III	$105
Specialist II	$95
Specialist I	$80
Project Scientist	$62
Financial Analyst II	$115
Administrative I	$75
PUBLIC OUTREACH (CATEGORY 16)	**HOURLY RATE****
Project Manager	$235
Strategic Adviser	$235
Assistant Project Manager	$205
Integrated Marketing Specialist	$170
Media Relations Specialist	$155
Graphic Designer	$145
Project Coordinator	$130
ASSESSMENT DISTRICT SERVICES (CATEGORY 26)	**HOURLY RATE****
Principal/Assessment Engineer	$250
Senior CAD Technician	$135
Project Administration	$105
REIMBURSABLE EXPENSES	**COST**
Reproduction	Cost
Consultant Services	Cost + 15%
Automobile Transportation	per IRS standard
Delivery, Freight, Courier	Cost
Agency Fees	Cost
Commercial Travel	Cost

* Assumes prevailing wages are applicable for field work.

** Rates for Technical Staff are based on an 8-hour workday, Monday through Friday. Work in excess of eight (8) hours in one day will be charged a premium of 1.5 times the quoted rates. Work over 40 hours in one week will be charged at 1.5 times the quoted rate. Work over 12 hours in one day or over eight (8) hours on the seventh consecutive day or worked holidays will be charged at 2.0 times the quoted rates.

D

FEE PROPOSAL/SCHEDULE

GEOTECHNICAL SERVICES – CATEGORIES 16, 20	
PROFESSIONAL STAFF	
Personnel	
Senior Principal Engineer / Geologist	$245.00/hr.
Principal Engineer / Geologist	$225.00/hr.
Associate Engineer / Geologist	$205.00/hr.
Senior Engineer / Geologist	$185.00/hr.
Project Engineer / Geologist	$155.00/hr.
Senior Staff Engineer / Geologist	$135.00/hr.
Staff Engineer / Geologist	$120.00/hr.
Senior CQA Manager	$170.00/hr.
Project Manager	$150.00/hr.
Field Supervisor	$150.00/hr.
Administration Staff	$75.00/hr.
FIELD STAFF	
	Prevailing Wage*
Soil / ACI Technician I	$122.00/hr.
- Vehicle Charge	$50.00/day
- Equipment Charge	$5.00/hr.
ICC Special Inspector I (Concrete, Masonry, Steel, Bolt, Fireproofing)	$125.00/hr.
Certified Welding Inspector I	$125.00/hr.
NDT Technician	$128.00/hr.
Laboratory Technician	$80.00/hr.
Ground Penetrating Radar (Technician and Equipment)	$198.00/hr.
Coring Equipment Fee	$70.00/hr.
Torque/Pull Testing (Technician and Equipment)	$130.00/hr.
"Wildcat", 35-lb hammer Dynamic Cone Penetrometer (DCP) with tech	$400.00/hr.
Lightweight 5-lb Gas Dynamic Cone Penetrometer (DCP) equip with tech	$180.00/hr.
Seismic Refraction Survey Using Geode 24-Channel Seismodule	$3,150.00
Fall of Potential Ground Testing (Ground Rod Test) - Initial Test	$975.00
Fall of Potential Ground Testing (Ground Rod Test) - Subsequent Test	$585.00
Pick-Up	$80.00/hr.
LABORATORY FEE SCHEDULE	
Asphalt Concrete	
Asphalt Mix Design Review	$375.00/ea.
Hveem Stability	$215.00/ea.
Hveem Unit Weight Sample Requiring Compaction	$200.00/ea.
Marshall Stability, Flow & Unit Weight	210.00/ea. (per test specimen)
Maximum Theoretical Unit Weight (Rice)	$210.00/ea.
Extraction - Ignition Oven (including gradation)	$245.00/ea.
Percent Swell	$160.00/ea.
Unit Wt Compacted Sample (Specific Gravity)	$95.00/ea.
Aggregates	
Absorption Test, Coarse Aggregate	$54.00/ea.
LABORATORY FEE SCHEDULE (CONTINUED)	
Absorption Test, Fine Aggregate	$54.00/ea.

FEE PROPOSAL/SCHEDULE

Clay Lumps & Friable Particles	$135.00/ea.
Cleanness Value	$160.00/ea.
Crushed Particles, Percent	$205.00/ea.
Durability Index, Coarse Aggregate	$130.00/ea.
Durability Index, Fine Aggregate	$130.00/ea.
Abrasion Resistance by LA Rattler	$205.00/ea.
Organic Impurities in Sand	$80.00/ea.
Sieve Analysis Coarse Aggregate	$100.00/ea.
Sieve Analysis Coarse & Fine Aggregate (includes Wash)	$140.00/ea.
Sodium Sulfate Soundness (5 cycle test per primary size)	$390.00/ea.
Specific Gravity, Fine Aggregate	$95.00/ea.
Specific Gravity, Coarse Aggregate	$85.00/ea.
Unit Weight (per cubic foot) Voids in Aggregate	$75.00/ea.
Rock Core (Compressive Strength)	$95.00/ea.
Structural/Reinforcing Steel	
Headed Rebar Tensile Test - No. 8 Bar and Smaller <	$115.00/ea.
Headed Rebar Tensile Test - No. 9 Bar to No. 11	$140.00/ea.
H. S. Bolt Conformance– Bolt, Nut & Washer (DSA)	$480.00/ea.
Mechanically Spliced Reinforcing Steel - No. 8 Bar and Smaller <	$200.00/ea.
Mechanically Spliced Reinforcing Steel - No. 9 Bar to No. 11	$215.00/ea.
Mechanically Spliced Reinforcing Steel - No. 14	$235.00/ea.
Mechanically Spliced Reinforcing Steel - Slippage	$42.00/ea.
Mechanical Tests, Hardness Test, Rockwell	$118.00/ea.
Prestressed Steel, Tensile Test, Strand (7-wire Coated)	$235.00/ea.
Prestressed Steel, Tensile Test, Strand (7-wire Uncoated)	$275.00/ea.
Reinforcing Steel, Tensile Test – No. 8 Bar and Smaller <	$95.00/ea.
Reinforcing Steel, Tensile Test – No. 9 Bar to No. 11	$108.00/ea.
Reinforcing Steel, Tensile Test – No. 11 Bar and Greater >	Quote
Reinforcing Steel, Bend Test	$75.00/ea.
Spray-applied Fireproofing Density Tests	$110.00/ea.
Structural Steel, Tensile – Up to 200,000 lbs.	$160.00/ea.
Structural Steel, Bend Test	$105.00/ea.
Welded Specimens, Tensile Test	$135.00/ea.
Chemical Analysis	Quote
Machining Costs If Required	$80.00/hr.
Masonry	
Absorption Test, Brick	$65.00/ea.
Compression Test, Composite Prism	$185.00/ea.
Compression Test, Brick	$55.00/ea.
Compression Test, Blocks	$95.00/ea.
Compression Test, Cores (does not include Coring for samples)	$80.00/ea.
Compression Test, Grout / Mortar	$37.00/ea.
Masonry Block Conformance (Does not include shrinkage)	$480.00/ea.
LABORATORY FEE SCHEDULE (CONTINUED)	

FEE PROPOSAL/SCHEDULE

Modulus of Rupture, Brick	$55.00/ea.
Moisture as Received, Brick	$55.00/ea.
Saturation Coefficient Brick	$55.00/ea.
Unit Weight & Absorption, Block	$80.00/ea.
Efflorescence, Block or Brick Only	$80.00/ea.
Linear Shrinkage	$270.00/ea.
Masonry Core Shear Test	$130.00/ea.
Soils	
Soil Processing Fee (per sample)	$22.00/ea.
Chloride Content of Soil	$85.00/ea.
Consolidation (up to 9 loads)	$295.00/ea.
Direct Shear (undisturbed ring specimens)	$270.00/ea.
Direct Shear (remolded specimens)	$315.00/ea.
Expansion Index	$170.00/ea.
Proctor (per curve) - 4-inch mold	$210.00/ea.
Proctor (per curve) - 6-inch mold	$275.00/ea.
Rock Correction (if required)	$75.00/ea.
Moisture Content / Dry Density	$42.00/ea.
Organic Matter	$80.00/ea.
Plasticity Index/Liquid Limit (Atterberg Limit)	$160.00/ea.
R-value (minimum 3 points)	$340.00/ea.
Resistivity & pH of Soil	$180.00/ea.
Sand Equivalent	$100.00/ea.
Sieve Analysis	$135.00/ea.
Sieve Analysis, with Hydrometer	$270.00/ea.
No. 200 Mesh Wash Particle Size Gradation	$95.00/ea.
Sulfate Content of Soil	$85.00/ea.
Thermal Resistivity of Soil (including 1 proctor curve)	$1300.00/ea.
Concrete	
Compression Test, 4x8 Cylinder	$32.00/ea.
Compression Test, 6x12 Cylinder	$34.00/ea.
Compression Test Gunite / Shotcrete (3 Cores/Panel, Coring Included)	$420.00/ea.
Compression Test, Core (incl sample prep)	$80.00/ea.
Compression Test, Lightweight Concrete Fill	$53.00/ea.
Compression Test, Non-shrink Grout Cubes	$53.00/ea.
Concrete Flexural Test	$95.00/ea.
Concrete Mix Design (revision or review)	$375.00/ea.
Drying Shrinkage (3 specimens – 28 days)	$375.00/ea.
Modulus of Elasticity, Static	$270.00/ea.
Splitting Tensile Strength	$105.00/ea.
Thermal Resistivity Testing of Concrete / FTB	$485.00/ea.
Unit Weight, Lightweight Concrete Fill	$80.00/ea.

FEE PROPOSAL/SCHEDULE

Category 16

PACIFIC RESOURCES SERVICES

PACIFIC RESOURCES SERVICES LABOR RATES FROM 1/1/2022 THROUGH 12/31/2022 *		
Staff		**Hourly Rate**
Benjamin Ocasio	Lead Labor Compliance Analyst	$146.80
Open	Labor Compliance Analyst	$124.21
Monica Mendez	Lead Site Visits	$101.63
Morita Capili	Office Support	$79.05

*Rates will remain fixed during the duration of the agreement.

All hourly costs are fully burdened. There are no additional costs (such as mileage, communication, etc.) to our client.

EXHIBIT C

TASK ORDER NO. [NUMBER]

TO MASTER PROFESSIONAL SERVICES AGREEMENT (2022-###)

This Task Order No. **[###]** ("Task Order") is made and entered into by and between the City of South Pasadena, a municipal corporation ("City"), and [Consultant] ("Consultant").

RECITAL

A. City and Consultant entered into an agreement entitled Master On-Call Professional Services Agreement ("Agreement") dated **[DATE]** by which the Consultant agreed to perform **[SERVICE DESCRIPTION]** services in accordance with Task Orders issued by the City.

NOW, THEREFORE, THE PARTIES HEREBY AGREE AS FOLLOWS:

1. **INCORPORATION BY REFERENCE.** This Task Order hereby incorporates by reference all terms and conditions set forth in the Agreement.

2. **SCOPE OF TASK ORDER.** Consultant shall perform the following services in accordance with the terms and conditions of the Agreement:
   [INSERT DESCRIPTION OF SPECIFIC WORK HERE OR INCLUDE ATTACHMENT TO TASK ORDER]

3. **TASK ORDER ADMINISTRATOR.** Consultant shall designate a principal point of contact for this task order:
   [INSERT NAME AND CONTACT INFORMATION OF CONSULTANT TASK ORDER ADMINISTRATOR]

4. **SCHEDULE.** Consultant shall complete the Task Order by the date listed below, or, if specified, in accordance with the required schedule of milestones listed below:
   [INSERT COMPLETION DATE OR SCHEDULE OF MILESTONES AS ATTACHMENT]

5. **PAYMENT.** For services performed by Consultant in accordance with this Task Order, City will compensate Consultant in accordance with the terms and conditions of the Agreement based on the Fee Schedule set forth below. The total cost of this project is to be no more than **[MAXIMUM AMOUNT]**, based on the rates in the Fee Schedule set forth below, and the timing of such payment as stated in the Scope of Task Order.

6. **SIGNATURES.** The individuals executing this Task Order represent and warrant that they have the right, power, legal capacity, and authority to enter into and to execute this Task Order on behalf of the respective legal entities of the Consultant and the City.

IN WITNESS WHEREOF, the City and Consultant do hereby agree to the full performance of the terms set forth herein.

"City"
City of South Pasadena

By:_____
Signature

Printed:_____

Title:_____

Date:_____

"Consultant"
[COMPANY]

By:_____
Signature

Printed:_____

Title:_____

Date:_____

Approved as to form:

By:_____
Roxanne Diaz, City Attorney

Date:_____

City Council Agenda Report

ITEM NO. 21

DATE: June 18, 2025

FROM: Todd Hileman, City Manager

PREPARED BY: Alma Medina, Assistant to the City Manager

SUBJECT: **CONSIDERATION OF APPROVAL OF AN AMENDMENT TO THE AGREEMENT WITH ACORN TECHNOLOGY SERVICES FOR INFORMATION TECHNOLOGY SUPPORT SERVICES TO EXTEND THE TERM TO SEPTEMBER 30, 2025**

Recommendation

It is recommended that the City Council consider the approval of an amendment to the agreement with Acorn Technology Services, extending the term to September 30, 2025.

Executive Summary

Since 2015, the City has contracted with Acorn Technology Services (Acorn) to provide full-service technology management services. Aside from day to day services, Acorn also provides technology project management and implementation across departments citywide. The proposed amendment will extend the current contract term, which ends at end of June 2025, to September 30, 2025. Staff is working on an assessment of the City's current agreement and requires the extension period time to complete review of the agreement and to work with Acorn to ensure the City's information technology infrastructure needs aligns with the scope of work.

Background

The City of South Pasadena has a professional services agreement with Acorn Technology Corporation (Acorn) for Information Technology (IT) services. While the City's relationship with Acorn began in 2014, the current agreement for ongoing IT services—including 24/7/365 help desk support, desktop technician support, network administration, system administration, and maintenance—commenced on July 1, 2021, and is set to expire at the end of June 2025.

The agreement was amended in May 2023 to reflect an increase in the annual contract amount. Additionally, in February 2024, the agreement was further amended to incorporate additional services for network upgrade initiatives and a third amendment was approve in June 2024 to extend the term through June 30, 2025.

The proposed amendment will extend the term of the agreement through September 30, 2025, to allow staff time to continue assessing the current agreement to ensure it aligns with the City's information technology infrastructure needs. Staff has engaged a consultant to assist in this assessment and projects that the assessment will be complete at the end of June.

Analysis
The annual cost for Acorn to provide comprehensive IT support services for the City is $306,808 annually. Staff is satisfied with the customer service and expertise provided by Acorn, but understands that there is a need to assess the current services being provided to ensure the City's IT needs are met.

The City engaged a consultant to review and assess its current IT outsourcing agreement with Acorn to ensure it continues to meet the evolving needs of all departments and supports long-term, cost-effective decision-making for software and IT services. As part of the assessment, the consultant was tasked with conducting a thorough review of the existing IT agreement ahead of its renewal, evaluating current staffing, roles, and operations at a high level. The objective is to provide the City with actionable insights and recommendations to optimize the agreement for future needs, identify any service or role gaps, and ensure alignment with the City's strategic goals. This assessment will also support the City in making better-informed budgetary decisions by providing a clearer understanding of current costs, future needs, and potential areas for efficiency.

Fiscal Impact
No additional appropriation is required for this contract amendment. For Fiscal Year 2025-2026, the City Manager's budget will include sufficient funds in the Information Technology Account (101-2010-2032-8170) for these professional services.

Attachment:
Attachment No. 1 - Proposed Amendment
Attachment No. 2 - Amendment No. 3
Attachment No. 3 - Amendment No. 2
Attachment No. 4 - Amendment No. 1
Attachment No. 5 - Professional Services Agreement

FOURTH AMENDMENT TO THE PROFESSIONAL SERVICES AGREEMENT WITH ACORN TECHNOLOGY SERVICES FOR ADDITIONAL SERVICES

THIS FOURTH AMENDMENT ("Amendment") is made on this 18th day of June 2025, by and between the CITY OF SOUTH PASADENA ("CITY") and ACORN TECHNOLOGY SERVICES. ("CONSULTANT').

RECITALS

WHEREAS, on April 21, 2021, the CITY and CONSULTANT entered into a Professional Services Agreement ("Agreement") for CONSULTANT to perform management of information technology services and support; and

WHEREAS, on May 17, 2023, the Agreement was amended to properly reflect the costs incurred by the City from the Consultant and therefore the total annual amount was modified to an amount not to exceed $306,808 annually for information technology services and support (collectively "Agreement"); and

WHEREAS, on February 7, 2024, the Agreement was amended to obtain additional services from Consultant for certain network hardware upgrade projects in order to implement and complete the City's IT initiatives ("Additional Services") in an amount not to exceed $354,400; and

WHEREAS, on June 27, 2024, the Agreement was amended to extend the term through June 30, 2025;and

WHEREAS, the City desires to extend the term of the agreement to September 30, 2025;

NOW THEREFORE, THE CITY AND THE CONSULTANT AGREE AS FOLLOWS:

Section 1. Section 3.6 of the Agreement entitled "Termination Date" is hereby amended to read as follows:

""Termination Date": September 30, 2025.

Section 2. All other terms, conditions, and provisions of the Agreement to the extent not modified by this Amendment, shall remain in full force and effect.

"City" City of South Pasadena	"Consultant" Acorn Technology Services
By:_____ *Signature*	By:_____ *Signature*
Printed: Todd Hileman	Printed: Craig Wolynez
Title: City Manager	Title: Consultant

Attest:

By:_____
Hector Gomez, Chief City Clerk

Approved as to form:

By:_____
Roxanne Diaz, City Attorney

Docusign Envelope ID: D6762ED5-985B-4B03-A324-E2D356D944C1

THIRD AMENDMENT TO THE PROFESSIONAL SERVICES AGREEMENT WITH ACORN TECHNOLOGY SERVICES FOR ADDITIONAL SERVICES

THIS THIRD AMENDMENT ("Amendment") is made on this 27th day of June 2024, by and between the CITY OF SOUTH PASADENA ("CITY") and ACORN TECHNOLOGY SERVICES. ("CONSULTANT').

RECITALS

WHEREAS, on April 21, 2021, the CITY and CONSULTANT entered into a Professional Services Agreement ("Agreement") for CONSULTANT to perform management of information technology services and support; and

WHEREAS, on May 17, 2023, the Agreement was amended to properly reflect the costs incurred by the City from the Consultant and therefore the total annual amount was modified to an amount not to exceed $306,808 annually for information technology services and support (collectively "Agreement"); and

WHEREAS, on February 7, 2024, the Agreement was amended to obtain additional services from Consultant for certain network hardware upgrade projects in order to implement and complete the City's IT initiatives ("Additional Services") in an amount not to exceed $354,400;

WHEREAS, the City desires to extend the term of the agreement to June 30, 2025;

NOW THEREFORE, THE CITY AND THE CONSULTANT AGREE AS FOLLOWS:

Section 1. Section 3.6 of the Agreement entitled "Termination Date" is hereby amended to read as follows:

""Termination Date": June 30, 2025.

Section 2. All other terms, conditions, and provisions of the Agreement to the extent not modified by this Amendment, shall remain in full force and effect.

"City"
City of South Pasadena

By: _____
Signature

Printed: Arminé Chaparyan

Title: City Manager

"Consultant"
Acorn Technology Services

By: _____
Signature

Printed: Craig Wolynez

Title: Consultant

Attest:

By: _____
Mark Perez , Deputy City Clerk

Amber Tardif, for Deputy City Clerk

~~For~~

Approved as to form:

By: _____
Roxanne Diaz, City Attorney

DocuSign Envelope ID: 64001B7F-3CDE-4FDE-A447-5FBABC664FE8

AMENDMENT TO PROFESSIONAL SERVICES AGREEMENT WITH ACORN TECHNOLOGY SERVICES FOR INFORMATION TECHNOLOGY SERVICES

THIS AMENDMENT ("Amendment") is made on this 17th day of May 2023, by and between the CITY OF SOUTH PASADENA ("CITY") and ACORN TECHNOLOGY SERVICES. ("CONSULTANT').

RECITALS

WHEREAS, on April 21, 2021, the CITY and CONSULTANT entered into an Agreement for PROFESSIONAL SERVICES ("Agreement") for CONSULTANT to perform management of information technology services and support; and

WHEREAS, the original Agreement was in the annual amount of $269,700 annually for the Scope of Services; and

WHEREAS, the CITY desires to execute an Amendment to properly reflect the costs incurred through the consultant, as items under support have been added and therefore modified the total annual amount, in an amount not to exceed $306,808 annually; and

NOW THEREFORE, THE CITY AND THE CONSULTANT AGREE AS FOLLOWS:

1. That Section 3.4 "Compensation" of the Agreement is hereby amended to read as follows:

   "Compensation": The total annual compensation and costs payable to Consultant by City for the Services rendered pursuant to this Agreement, shall be in the amount not to exceed of Three Hundred Six Thousand Eight Hundred and Eight Dollars $306,808 annually.

2. All other terms, conditions, and provisions of the Agreement to the extent not modified by this Amendment, shall remain in full force and effect.

DocuSign Envelope ID: 64001B7F-3CDE-4FDE-A447-5FBABC664FE8

"City"
City of South Pasadena

By:_____
Signature

Printed: Arminé Chaparyan

Title: City Manager

Date: 5/17/23

"Consultant"
Acorn Technology Services

By: DocuSigned by: Craig Wolynez
Signature

Printed: Craig Wolynez

Title: Consultant

Date: 5/17/2023

Attest:

By: DocuSigned by: Mark Perez
Mark Perez , Deputy City Clerk

Date: 5/18/2023

Approved as to form:

By: DocuSigned by: Andrew Jared
Andrew L. Jared, City Attorney

Date: 5/18/2023

DocuSign Envelope ID: 64001B7F-3CDE-4FDE-A447-5FBABC664FE8

AMENDMENT TO PROFESSIONAL SERVICES AGREEMENT WITH ACORN TECHNOLOGY SERVICES FOR INFORMATION TECHNOLOGY SERVICES

THIS AMENDMENT ("Amendment") is made on this 17th day of May 2023, by and between the CITY OF SOUTH PASADENA ("CITY") and ACORN TECHNOLOGY SERVICES. ("CONSULTANT').

RECITALS

WHEREAS, on April 21, 2021, the CITY and CONSULTANT entered into an Agreement for PROFESSIONAL SERVICES ("Agreement") for CONSULTANT to perform management of information technology services and support; and

WHEREAS, the original Agreement was in the annual amount of $269,700 annually for the Scope of Services; and

WHEREAS, the CITY desires to execute an Amendment to properly reflect the costs incurred through the consultant, as items under support have been added and therefore modified the total annual amount, in an amount not to exceed $306,808 annually; and

NOW THEREFORE, THE CITY AND THE CONSULTANT AGREE AS FOLLOWS:

1. That Section 3.4 "Compensation" of the Agreement is hereby amended to read as follows:

   "Compensation": The total annual compensation and costs payable to Consultant by City for the Services rendered pursuant to this Agreement, shall be in the amount not to exceed of Three Hundred Six Thousand Eight Hundred and Eight Dollars $306,808 annually.

2. All other terms, conditions, and provisions of the Agreement to the extent not modified by this Amendment, shall remain in full force and effect.

DocuSign Envelope ID: 64001B7F-3CDE-4FDE-A447-5FBABC664FE8

"City"
City of South Pasadena

By:_____
Signature

Printed: Arminé Chaparyan

Title: City Manager

Date: 5/17/23

"Consultant"
Acorn Technology Services

By: DocuSigned by: Craig Wolynez
Signature

Printed: Craig Wolynez

Title: Consultant

Date: 5/17/2023

Attest:

By: DocuSigned by: Mark Perez
Mark Perez , Deputy City Clerk

Date: 5/18/2023

Approved as to form:

By: DocuSigned by: Andrew Jared
Andrew L. Jared, City Attorney

Date: 5/18/2023

DocuSign Envelope ID: B97B43EF-4F14-4BBE-8A33-EB6EE773556F

Contract No. 2021-019

PROFESSIONAL SERVICES AGREEMENT FOR CONSULTANT SERVICES

(City of South Pasadena / *Acorn Technology Services*)

1. IDENTIFICATION

This PROFESSIONAL SERVICES AGREEMENT ("Agreement") is entered into by and between the City of South Pasadena, a California municipal corporation ("City"), and Acorn Technology Services, a California Corporation ("Consultant").

2. RECITALS

2.1. City has determined that it requires the following professional services from a consultant: Managed Information Technology Services.

2.2. Consultant represents that it is fully qualified to perform such professional services by virtue of its experience and the training, education and expertise of its principals and employees. Consultant further represents that it is willing to accept responsibility for performing such services in accordance with the terms and conditions set forth in this Agreement.

2.3. Consultant represents that it has no known relationships with third parties, City Council members, or employees of City that would (1) present a conflict of interest with the rendering of services under this Agreement under Government Code Section 1090, the Political Reform Act (Government Code Section 81000 *et seq.*), or other applicable law, (2) prevent Consultant from performing the terms of this Agreement, or (3) present a significant opportunity for the disclosure of confidential information.

NOW, THEREFORE, for and in consideration of the mutual covenants and conditions herein contained, City and Consultant agree as follows:

3. DEFINITIONS

3.1. "Scope of Services": Such professional services as are set forth in Consultant's proposal to City attached hereto as Exhibit A and incorporated herein by this reference.

3.2. "Agreement Administrator": The Agreement Administrator for this project is Lucy Demirjian, Assistant to the City Manager. The Agreement Administrator shall be the principal point of contact at the City for this project. All services under this Agreement shall be performed at the request of the Agreement Administrator. The Agreement Administrator will establish the timetable for completion of services and any interim milestones. City reserves the right to change this designation upon written notice to Consultant

3.3. "Approved Fee Schedule": Consultant's compensation rates are set forth in the fee schedule attached hereto as Exhibit B and incorporated herein by this reference. This

DocuSign Envelope ID: B97B43EF-4F14-4BBE-8A33-EB6EE773556F

fee schedule shall remain in effect for the duration of this Agreement unless modified in writing by mutual agreement of the parties.

3.4. "Compensation": The total compensation and costs payable to Consultant by City for the Services rendered pursuant to this Agreement, shall be in accordance with "Exhibit B" (the "Compensation Schedule"). The Monthly Recurring Charges under this Agreement are Twenty Two Thousand, Four Hundred Seventy Five Dollars ($22,475) for the initial three year term. For Years 4 and 5, the pricing will be adjusted by 5%.

3.5. "Commencement Date": July 1, 2021.

3.6. "Termination Date": June 30, 2024, unless renewed for 2 additional years.

4. TERM

The term of this Agreement shall commence at 12:00 a.m. on the Commencement Date and shall expire at 11:59 p.m. on the Termination Date unless extended by written agreement of the parties or terminated earlier under Section 18 ("Termination") below. Consultant may request extensions of time to perform the services required hereunder. Such extensions shall be effective if authorized in advance by City in writing and incorporated in written amendments to this Agreement.

5. CONSULTANT'S DUTIES

5.1. **Services**. Consultant shall perform the services identified in the Scope of Services. City shall have the right to request, in writing, changes in the Scope of Services. Any such changes mutually agreed upon by the parties, and any corresponding increase or decrease in compensation, shall be incorporated by written amendment to this Agreement.

5.2. **Coordination with City**. In performing services under this Agreement, Consultant shall coordinate all contact with City through its Agreement Administrator.

5.3. **Intentionally Deleted.**

5.4. **Business License.** Consultant shall obtain and maintain in force a City business license for the duration of this Agreement.

5.5. **Professional Standards.** Consultant shall perform all work to the standards of Consultant's profession and in a manner reasonably satisfactory to City. Consultant shall keep itself fully informed of and in compliance with all local, state, and federal laws, rules, and regulations in any manner affecting the performance of this Agreement, including all Cal/OSHA requirements, the conflict of interest provisions of Government Code § 1090 and the Political Reform Act (Government Code § 81000 et seq.).

DocuSign Envelope ID: B97B43EF-4F14-4BBE-8A33-EB6EE773556F

5.6. **Avoid Conflicts.** During the term of this Agreement, Consultant shall not perform any work for another person or entity for whom Consultant was not working at the Commencement Date if such work would present a conflict interfering with performance under this Agreement. However, City may consent in writing to Consultant's performance of such work.

5.7. **Appropriate Personnel.** Consultant has, or will secure at its own expense, all personnel required to perform the services identified in the Scope of Services. All such services shall be performed by Consultant or under its supervision, and all personnel engaged in the work shall be qualified to perform such services. Lucy Demirjian shall be Consultant's project administrator and shall have direct responsibility for management of Consultant's performance under this Agreement. No change shall be made in Consultant's project administrator without City's prior written consent.

5.8. **Substitution of Personnel.** Any persons named in the proposal or Scope of Services constitutes a promise to the City that those persons will perform and coordinate their respective services under this Agreement. Should one or more of such personnel become unavailable, Consultant may substitute other personnel of at least equal competence upon written approval of City. If City and Consultant cannot agree as to the substitution of key personnel, City may terminate this Agreement for cause.

5.9. **Permits and Approvals.** Consultant shall obtain, at its sole cost and expense, all permits and regulatory approvals necessary for Consultant's performance of this Agreement. This includes, but shall not be limited to, professional licenses, encroachment permits and building and safety permits and inspections.

5.10. **Notification of Organizational Changes.** Consultant shall notify the Agreement Administrator, in writing, of any change in name, ownership or control of Consultant's firm or of any subcontractor. Change of ownership or control of Consultant's firm may require an amendment to this Agreement.

5.11. **Records.** Consultant shall maintain any and all ledgers, books of account, invoices, vouchers, canceled checks, and other records or documents evidencing or relating to charges for services or expenditures and disbursements charged to City under this Agreement for a minimum of three (3) years, or for any longer period required by law, from the date of final payment to Consultant under this Agreement. All such documents shall be made available for inspection, audit, and/or copying at any time during regular business hours, upon oral or written request of City. In addition, pursuant to Government Code Section 8546.7, if the amount of public funds expended under this Agreement exceeds ten thousand dollars, all such documents and this Agreement shall be subject to the examination and audit of the State Auditor, at the request of City or as part of any audit of City, for a period of three (3) years after final payment under this Agreement.

6. SUBCONTRACTING

DocuSign Envelope ID: B97B43EF-4F14-4BBE-8A33-EB6EE773556F

6.1. **General Prohibition.** This Agreement covers professional services of a specific and unique nature. Except as otherwise provided herein, Consultant shall not assign or transfer its interest in this Agreement or subcontract any services to be performed without amending this Agreement.

6.2. **Consultant Responsible.** Consultant shall be responsible to City for all services to be performed under this Agreement.

6.3. **Identification in Fee Schedule.** All subcontractors shall be specifically listed and their billing rates identified in the Approved Compensation Schedule, Exhibit B. Any changes must be approved by the Agreement Administrator in writing as an amendment to this Agreement.

6.4. **Compensation for Subcontractors.** City shall pay Consultant for work performed by its subcontractors, if any, only at Consultant's actual cost plus an approved mark-up as set forth in the Approved Compensation Schedule, Exhibit B. Consultant shall be liable and accountable for any and all payments, compensation, and federal and state taxes to all subcontractors performing services under this Agreement. City shall not be liable for any payment, compensation, or federal and state taxes for any subcontractors.

7. COMPENSATION

7.1. **General.** City agrees to compensate Consultant for the services provided under this Agreement, and Consultant agrees to accept payment in accordance with the Fee Schedule in full satisfaction for such services. Compensation shall not exceed the Maximum Amount. Consultant shall not be reimbursed for any expenses unless provided for in this Agreement or authorized in writing by City in advance.

7.2. **Invoices.** Consultant shall submit to City an invoice, on a monthly basis or as otherwise agreed to by the Agreement Administrator, for services performed pursuant to this Agreement. Each invoice shall identify the Maximum Amount, the services rendered during the billing period, the amount due for the invoice, and the total amount previously invoiced.

7.3. **Taxes.** City shall not withhold applicable taxes or other payroll deductions from payments made to Consultant except as otherwise required by law. Consultant shall be solely responsible for calculating, withholding, and paying all taxes.

7.4. **Disputes.** The parties agree to meet and confer at mutually agreeable times to resolve any disputed amounts contained in an invoice submitted by Consultant.

7.5. **Additional Work.** Consultant shall not be reimbursed for any expenses incurred for work performed outside the Scope of Services unless prior written approval is given by the City through a fully executed written amendment. Consultant shall not undertake any such work without prior written approval of the City.

DocuSign Envelope ID: B97B43EF-4F14-4BBE-8A33-EB6EE773556F

7.6. **City Satisfaction as Precondition to Payment.** Notwithstanding any other terms of this Agreement, no payments shall be made to Consultant until City is satisfied that the services are satisfactory.

7.7. **Right to Withhold Payments.** If Consultant fails to provide a deposit or promptly satisfy an indemnity obligation described in Section 11, City shall have the right to withhold payments under this Agreement to offset that amount.

8. PREVAILING WAGES

Consultant is aware of the requirements of California Labor Code Section 1720, et seq., and 1770, et seq., as well as California Code of Regulations, Title 8, Section 16000, et seq., ("Prevailing Wage Laws"), which require the payment of prevailing wage rates and the performance of other requirements on certain "public works" and "maintenance" projects. Consultant shall defend, indemnify, and hold the City, tis elected officials, officers, employees, and agents free and harmless form any claim or liability arising out of any failure or alleged failure of Consultant to comply with the Prevailing Wage Laws.

9. OWNERSHIP OF WRITTEN PRODUCTS

All reports, documents or other written material ("written products" herein) developed by Consultant in the performance of this Agreement shall be and remain the property of City without restriction or limitation upon its use or dissemination by City except as provided by law. Consultant may take and retain copies of such written products as desired, but no such written products shall be the subject of a copyright application by Consultant.

10. RELATIONSHIP OF PARTIES

10.1. **General.** Consultant is, and shall at all times remain as to City, a wholly independent contractor.

10.2. **No Agent Authority.** Consultant shall have no power to incur any debt, obligation, or liability on behalf of City or otherwise to act on behalf of City as an agent. Neither City nor any of its agents shall have control over the conduct of Consultant or any of Consultant's employees, except as set forth in this Agreement. Consultant shall not represent that it is, or that any of its agents or employees are, in any manner employees of City.

10.3. **Independent Contractor Status.** Under no circumstances shall Consultant or its employees look to the City as an employer. Consultant shall not be entitled to any benefits. City makes no representation as to the effect of this independent contractor relationship on Consultant's previously earned California Public Employees Retirement System ("CalPERS") retirement benefits, if any, and Consultant specifically assumes the responsibility for making such a determination. Consultant

DocuSign Envelope ID: B97B43EF-4F14-4BBE-8A33-EB6EE773556F

shall be responsible for all reports and obligations including, but not limited to: social security taxes, income tax withholding, unemployment insurance, disability insurance, and workers' compensation, and other applicable federal and state taxes.

10.4. **Indemnification of CalPERS Determination.** In the event that Consultant or any employee, agent, or subcontractor of Consultant providing services under this Agreement claims or is determined by a court of competent jurisdiction or CalPERS to be eligible for enrollment in CalPERS as an employee of the City, Consultant shall indemnify, defend, and hold harmless City for the payment of any employee and/or employer contributions for CalPERS benefits on behalf of Consultant or its employees, agents, or subcontractors, as well as for the payment of any penalties and interest on such contributions, which would otherwise be the responsibility of City.

11. INDEMNIFICATION

11.1 **Definitions.** For purposes of this Section 11, "Consultant" shall include Consultant, its officers, employees, servants, agents, or subcontractors, or anyone directly or indirectly employed by either Consultant or its subcontractors, in the performance of this Agreement. "City" shall include City, its officers, agents, employees and volunteers.

11.2 **Consultant to Indemnify City.** To the fullest extent permitted by law, Consultant shall indemnify, hold harmless, and defend City from and against any and all claims, losses, costs or expenses for any personal injury or property damage arising out of or in connection with Consultant's alleged negligence, recklessness or willful misconduct or other wrongful acts, errors or omissions of Consultant or failure to comply with any provision in this Agreement.

11.3 **Scope of Indemnity.** Personal injury shall include injury or damage due to death or injury to any person, whether physical, emotional, consequential or otherwise, Property damage shall include injury to any personal or real property. Consultant shall not be required to indemnify City for such loss or damage as is caused by the sole active negligence or willful misconduct of the City.

11.4 **Attorneys Fees.** Such costs and expenses shall include reasonable attorneys' fees for counsel of City's choice, expert fees and all other costs and fees of litigation. Consultant shall not be entitled to any refund of attorneys' fees, defense costs or expenses in the event that it is adjudicated to have been non-negligent.

11.5 **Defense Deposit.** The City may request a deposit for defense costs from Consultant with respect to a claim. If the City requests a defense deposit, Consultant shall provide it within 15 days of the request.

11.6 **Waiver of Statutory Immunity.** The obligations of Consultant under this Section 11 are not limited by the provisions of any workers' compensation act or similar act. Consultant expressly waives its statutory immunity under such statutes or laws as to City.

DocuSign Envelope ID: B97B43EF-4F14-4BBE-8A33-EB6EE773556F

11.7 **Indemnification by Subcontractors.** Consultant agrees to obtain executed indemnity agreements with provisions identical to those set forth here in this Section 11 from each and every subcontractor or any other person or entity involved in the performance of this Agreement on Consultant's behalf.

11.8 **Insurance Not a Substitute.** City does not waive any indemnity rights by accepting any insurance policy or certificate required pursuant to this Agreement. Consultant's indemnification obligations apply regardless of whether or not any insurance policies are determined to be applicable to the claim, demand, damage, liability, loss, cost or expense.

12. INSURANCE

12.1. **Insurance Required.** Consultant shall maintain insurance as described in this section and shall require all of its subcontractors, consultants, and other agents to do the same. Approval of the insurance by the City shall not relieve or decrease any liability of Consultant Any requirement for insurance to be maintained after completion of the work shall survive this Agreement.

12.2. **Documentation of Insurance.** City will not execute this agreement until it has received a complete set of all required documentation of insurance coverage. However, failure to obtain the required documents prior to the work beginning shall not waive the Consultant's obligation to provide them. Consultant shall file with City:

- Certificate of Insurance, indicating companies acceptable to City, with a Best's Rating of no less than A:VII showing. The Certificate of Insurance must include the following reference: Managed IT Services.
- Documentation of Best's rating acceptable to the City.
- Original endorsements effecting coverage for all policies required by this Agreement.
- City reserves the right to obtain a full certified copy of any Insurance policy and endorsements. Failure to exercise this right shall not constitute a waiver of the right to exercise later.

12.3. **Coverage Amounts.** Insurance coverage shall be at least in the following minimum amounts:

- Professional Liability Insurance: $2,000,000 per occurrence, $4,000,000 aggregate

- General Liability:
  - General Aggregate: $4,000,000
  - Products Comp/Op Aggregate $4,000,000
  - Personal & Advertising Injury $2,000,000
  - Each Occurrence $2,000,000
  - Fire Damage (any one fire) $ 100,000

DocuSign Envelope ID: B97B43EF-4F14-4BBE-8A33-EB6EE773556F

- Medical Expense (any 1 person) $ 10,000

- Workers' Compensation:
  - Workers' Compensation Statutory Limits
  - EL Each Accident $1,000,000
  - EL Disease - Policy Limit $1,000,000
  - EL Disease - Each Employee $1,000,000

- Automobile Liability
  - Any vehicle, combined single limit $1,000,000

Any available insurance proceeds broader than or in excess of the specified minimum insurance coverage requirements or limits shall be available to the additional insured. Furthermore, the requirements for coverage and limits shall be the greater of (1) the minimum coverage and limits specified in this Agreement, or (2) the broader coverage and maximum limits of coverage of any insurance policy or proceeds available to the named insured

12.4. **General Liability Insurance.** Commercial General Liability Insurance shall be no less broad than ISO form CG 00 01. Coverage must be on a standard Occurrence form. Claims-Made, modified, limited or restricted Occurrence forms are not acceptable.

12.5. **Worker's Compensation Insurance.** Consultant is aware of the provisions of Section 3700 of the Labor Code which requires every employer to carry Workers' Compensation (or to undertake equivalent self-insurance), and Consultant will comply with such provisions before commencing the performance of the work of this Agreement. If such insurance is underwritten by any agency other than the State Compensation Fund, such agency shall be a company authorized to do business in the State of California.

12.6. **Automobile Liability Insurance.** Covered vehicles shall include owned if any, non-owned, and hired automobiles and, trucks.

12.7. Pr**ofessional Liability Insurance or Errors & Omissions Coverage.** The deductible or self-insured retention may not exceed $50,000. If the insurance is on a Claims-Made basis, the retroactive date shall be no later than the commencement of the work. Coverage shall be continued for two years after the completion of the work by one of the following: (1) renewal of the existing policy; (2) an extended reporting period endorsement; or (3) replacement insurance with a retroactive date no later than the commencement of the work under this Agreement.

12.8. **Claims-Made Policies.** If any of the required policies provide coverage on a claims-made basis the Retroactive Date must be shown and must be before the date of the contract or the beginning of contract work. Claims-Made Insurance must be maintained and evidence of insurance must be provided for at least five (5) years after completion of the contract of work. If coverage is canceled or non-renewed, and not replaced with

DocuSign Envelope ID: B97B43EF-4F14-4BBE-8A33-EB6EE773556F

another claims-made policy form with a Retroactive Date prior to the contract effective date, the Consultant must purchase "extended reporting" coverage for a minimum of five (5) years after completion of contract work.

12.9. **Additional Insured Endorsements.** The City, its City Council, Commissions, officers, and employees of South Pasadena must be endorsed as an additional insured for each policy required herein, other than Professional Errors and Omissions and Worker's Compensation, for liability arising out of ongoing and completed operations by or on behalf of the Consultant. Consultant's insurance policies shall be primary as respects any claims related to or as the result of the Consultant's work. Any insurance, pooled coverage or self-insurance maintained by the City, its elected or appointed officials, directors, officers, agents, employees, volunteers, or consultants shall be non-contributory. All endorsements shall be signed by a person authorized by the insurer to bind coverage on its behalf. General liability coverage can be provided using an endorsement to the Consultant's insurance at least as broad as ISO Form CG 20 10 11 85 or both CG 20 10 and CG 20 37.

12.10. **Failure to Maintain Coverage.** In the event any policy is canceled prior to the completion of the project and the Consultant does not furnish a new certificate of insurance prior to cancellation, City has the right, but not the duty, to obtain the required insurance and deduct the premium(s) from any amounts due the Consultant under this Agreement. Failure of the Consultant to maintain the insurance required by this Agreement, or to comply with any of the requirements of this section, shall constitute a material breach of this Agreement.

12.11. **Notices.** Contractor shall provide immediate written notice if (1) any of the required insurance policies is terminated; (2) the limits of any of the required policies are reduced; (3) or the deductible or self-insured retention is increased. Consultant shall provide no less than 30 days' notice of any cancellation or material change to policies required by this Agreement. Consultant shall provide proof that cancelled or expired policies of insurance have been renewed or replaced with other policies providing at least the same coverage. Such proof will be furnished at least two weeks prior to the expiration of the coverages. The name and address for Additional Insured Endorsements, Certificates of Insurance and Notices of Cancellation is: City of South Pasadena, Attn: Lucy Demirjian, South Pasadena, CA 95945.

12.12. **Consultant's Insurance Primary.** The insurance provided by Consultant, including all endorsements, shall be primary to any coverage available to City. Any insurance or self-insurance maintained by City and/or its officers, employees, agents or volunteers, shall be in excess of Consultant's insurance and shall not contribute with it.

12.13. **Waiver of Subrogation.** Consultant hereby waives all rights of subrogation against the City. Consultant shall additionally waive such rights either by endorsement to each policy or provide proof of such waiver in the policy itself.

DocuSign Envelope ID: B97B43EF-4F14-4BBE-8A33-EB6EE773556F

12.14. **Report of Claims to City.** Consultant shall report to the City, in addition to the Consultant's insurer, any and all insurance claims submitted to Consultant's insurer in connection with the services under this Agreement.

12.15. **Premium Payments and Deductibles.** Consultant must disclose all deductibles and self-insured retention amounts to the City. The City may require the Consultant to provide proof of ability to pay losses and related investigations, claim administration, and defense expenses within retention amounts. Ultimately, City must approve all such amounts prior to execution of this Agreement.

City has no obligation to pay any premiums, assessments, or deductibles under any policy required in this Agreement. Consultant shall be responsible for all premiums and deductibles in all of Consultant's insurance policies. The amount of deductibles for insurance coverage required herein are subject to City's approval.

12.16. **Duty to Defend and Indemnify.** Consultant's duties to defend and indemnify City under this Agreement shall not be limited by the foregoing insurance requirements and shall survive the expiration of this Agreement.

13. MUTUAL COOPERATION

13.1. **City Cooperation in Performance.** City shall provide Consultant with all pertinent data, documents and other requested information as is reasonably available for the proper performance of Consultant's services under this Agreement.

13.2. **Consultant Cooperation in Defense of Claims.** If any claim or action is brought against City relating to Consultant's performance in connection with this Agreement, Consultant shall render any reasonable assistance that City may require in the defense of that claim or action.

14. NOTICES

Any notices, bills, invoices, or reports required by this Agreement shall be deemed received on: (i) the day of delivery if delivered by hand, facsimile or overnight courier service during Consultant's and City's regular business hours; or (ii) on the third business day following deposit in the United States mail if delivered by mail, postage prepaid, to the addresses listed below (or to such other addresses as the parties may, from time to time, designate in writing).

If to City	If to Consultant
Lucy Demirjian City of South Pasadena Management Services Department 1414 Mission Street South Pasadena, CA 91030	Mickey McGuire Acorn Technology Services 1960 Chicago Ave, Ste E9 Riverside, CA 92507

DocuSign Envelope ID: B97B43EF-4F14-4BBE-8A33-EB6EE773556F

Telephone: (626) 403-7210
Facsimile: (626) 403-7211

951.784.3500 (office)
951.320.7066 (fax)
www.acorntechservices.com

With courtesy copy to:

Teresa L. Highsmith, Esq.
South Pasadena City Attorney
Colantuono, Highsmith & Whatley, PC
790 E. Colorado Blvd. Ste. 850
Pasadena, CA 91101
Telephone: (213) 542-5700
Facsimile: (213) 542-5710

15. SURVIVING COVENANTS

The parties agree that the covenants contained in paragraph 5.11 (Records), paragraph 10.4 (Indemnification of CalPERS Determination), Section 11 (Indemnity), paragraph 12.8 (Claims-Made Policies), paragraph 13.2 (Consultant Cooperation in Defense of Claims), and paragraph 18.1 (Confidentiality) of this Agreement shall survive the expiration or termination of this Agreement, subject to the provisions and limitations of this Agreement and all otherwise applicable statutes of limitations and repose.

16. TERMINATION

16.1. **City Termination.** City may terminate this Agreement for any reason on 60 calendar days' written notice to Consultant. Consultant agrees to cease all work under this Agreement on or before the effective date of any notice of termination. All City data, documents, objects, materials or other tangible things shall be returned to City upon the termination or expiration of this Agreement.

16.2. **Consultant Termination.** Consultant may terminate this Agreement for a material breach of this Agreement upon 60 days' notice.

16.3. **Compensation Following Termination.** Upon termination, Consultant shall be paid based on the work satisfactorily performed at the time of termination. In no event shall Consultant be entitled to receive more than the amount that would be paid to Consultant for the full performance of the services required by this Agreement. The City shall have the benefit of such work as may have been completed up to the time of such termination.

16.4. **Remedies.** City retains any and all available legal and equitable remedies for Consultant's breach of this Agreement.

17. INTERPRETATION OF AGREEMENT

DocuSign Envelope ID: B97B43EF-4F14-4BBE-8A33-EB6EE773556F

17.1. **Governing Law.** This Agreement shall be governed and construed in accordance with the laws of the State of California.

17.2. **Integration of Exhibits.** All documents referenced as exhibits in this Agreement are hereby incorporated into this Agreement. In the event of any material discrepancy between the express provisions of this Agreement and the provisions of any document incorporated herein by reference, the provisions of this Agreement shall prevail. This instrument contains the entire Agreement between City and Consultant with respect to the transactions contemplated herein. No other prior oral or written agreements are binding upon the parties. Amendments hereto or deviations herefrom shall be effective and binding only if made in writing and executed on by City and Consultant.

17.3. **Headings.** The headings and captions appearing at the commencement of the sections hereof, and in any paragraph thereof, are descriptive only and for convenience in reference to this Agreement. Should there be any conflict between such heading, and the section or paragraph thereof at the head of which it appears, the language of the section or paragraph shall control and govern in the construction of this Agreement.

17.4. **Pronouns.** Masculine or feminine pronouns shall be substituted for the neuter form and vice versa, and the plural shall be substituted for the singular form and vice versa, in any place or places herein in which the context requires such substitution(s).

17.5. **Severability.** If any term or provision of this Agreement or the application thereof to any person or circumstance shall, to any extent, be invalid or unenforceable, then such term or provision shall be amended to, and solely to the extent necessary to, cure such invalidity or unenforceability, and shall be enforceable in its amended form. In such event, the remainder of this Agreement, or the application of such term or provision to persons or circumstances other than those as to which it is held invalid or unenforceable, shall not be affected, and each term and provision of this Agreement shall be valid and be enforced to the fullest extent permitted by law.

17.6. **No Presumption Against Drafter.** Each party had an opportunity to consult with an attorney in reviewing and drafting this agreement. Any uncertainty or ambiguity shall not be construed for or against any party based on attribution of drafting to any party.

18. GENERAL PROVISIONS

18.1. **Confidentiality.** All data, documents, discussion, or other information developed or received by Consultant for performance of this Agreement are deemed confidential and Consultant shall not disclose it without prior written consent by City. City shall grant such consent if disclosure is legally required. All City data shall be returned to City upon the termination or expiration of this Agreement.

18.2. **Conflicts of Interest.** Consultant maintains and warrants that it has not employed nor retained any company or person, other than a bona fide employee working solely for Consultant, to solicit or secure this Agreement. Further, Consultant warrants that it has not paid nor has it agreed to pay any company or person, other than a bona fide

DocuSign Envelope ID: B97B43EF-4F14-4BBE-8A33-EB6EE773556F

employee working solely for Consultant, any fee, commission, percentage, brokerage fee, gift or other consideration contingent upon or resulting from the award or making of this Agreement. Consultant further agrees to file, or shall cause its employees or subcontractor to file, a Statement of Economic Interest with the City's Filing Officer if required under state law in the performance of the services. For breach or violation of this warranty, City shall have the right to rescind this Agreement without liability. For the term of this Agreement, no member, officer, or employee of City, during the term of his or her service with City, shall have any direct interest in this Agreement, or obtain any present or anticipated material benefit arising therefrom.

18.3. **Non-assignment.** Consultant shall not delegate, transfer, subcontract or assign its duties or rights hereunder, either in whole or in part, without City's prior written consent, and any attempt to do so shall be void and of no effect. City shall not be obligated or liable under this Agreement to any party other than Consultant.

18.4. **Binding on Successors.** This Agreement shall be binding on the successors and assigns of the parties.

18.5. **No Third-Party Beneficiaries.** Except as expressly stated herein, there is no intended third-party beneficiary of any right or obligation assumed by the parties.

18.6. **Time of the Essence.** Time is of the essence for each and every provision of this Agreement.

18.7. **Non-Discrimination.** Consultant shall not discriminate against any employee or applicant for employment because of race, sex (including pregnancy, childbirth, or related medical condition), creed, national origin, color, disability as defined by law, disabled veteran status, Vietnam veteran status, religion, age (40 and above), medical condition (cancer-related), marital status, ancestry, or sexual orientation. Employment actions to which this provision applies shall include, but not be limited to, the following: employment, upgrading, demotion, or transfer; recruitment or recruitment advertising; layoff or termination; rates of pay or other forms of compensation; or in terms, conditions or privileges of employment, and selection for training. Consultant agrees to post in conspicuous places, available to employees and applicants for employment, the provisions of this nondiscrimination clause.

18.8. **Waiver.** No provision, covenant, or condition of this Agreement shall be deemed to have been waived by City or Consultant unless in writing signed by one authorized to bind the party asserted to have consented to the waiver. The waiver by City or Consultant of any breach of any provision, covenant, or condition of this Agreement shall not be deemed to be a waiver of any subsequent breach of the same or any other provision, covenant, or condition.

18.9. **Excused Failure to Perform.** Consultant shall not be liable for any failure to perform if Consultant presents acceptable evidence, in City's sole judgment, that such failure was due to causes beyond the control and without the fault or negligence of Consultant.

DocuSign Envelope ID: B97B43EF-4F14-4BBE-8A33-EB6EE773556F

18.10. **Remedies Non-Exclusive.** Each right, power and remedy provided for herein or now or hereafter existing at law, in equity, by statute, or otherwise shall be cumulative and shall be in addition to every other right, power, or remedy provided for herein or now or hereafter existing at law, in equity, by statute, or otherwise. The exercise, the commencement of the exercise, or the forbearance from the exercise by any party of any one or more of such rights, powers or remedies shall not preclude the simultaneous or later exercise by such party of any or all of such other rights, powers or remedies.

18.11. **Attorneys' Fees.** If legal action shall be necessary to enforce any term, covenant or condition contained in this Agreement, the prevailing party shall be entitled to an award of reasonable attorneys' fees and costs expended in the action.

18.12. **Venue.** The venue for any litigation shall be Los Angeles County, California and Consultant hereby consents to jurisdiction in Los Angeles County for purposes of resolving any dispute or enforcing any obligation arising under this Agreement.

TO EFFECTUATE THIS AGREEMENT, the parties have caused their duly authorized representatives to execute this Agreement on the dates set forth below.

"City"
City of South Pasadena

DocuSigned by:
By: Sean Joyce
0D867796FCFE42A...
Signature

Printed: Sean Joyce

Title: Interim City Manager

Date: 4/28/2021

"Consultant"
Acorn Technology Services

DocuSigned by:
By: Mickey McGuire
15408797DAF64E8...
Signature

Printed: Mickey McGuire

Title: CEO

Date: 4/28/2021

Attest:

DocuSigned by:
By: Linda Thai
781DBEA3DC52477...
Linda Thai, Deputy City Clerk

Date: 4/28/2021

Approved as to form:

DocuSigned by:
By: Teresa Highsmith
3657EFA936854DF...
Teresa L. Highsmith, City Attorney

Date: 4/28/2021

DocuSign Envelope ID: B97B43EF-4F14-4BBE-8A33-EB6EE773556F

EXHIBIT A

Scope of Services- General Support

1) Managed IT Services

- Monitoring services
- Maintaining operational knowledge base for city specific systems
- Performance tuning and monitoring
- Perform routine maintenance tasks as noted below in Section 7
- Manage updates, patches/ hotfixes, antivirus/anti-malware definitions
- Change Requests, such new users, passwords, permissions, etc.
- Configuration Management for different user groups
- Server Administration
- Network Administration
- Hardware/Software Asset Management with recommended replacement schedules
- Record completion of work via ticketing system
- Training on general use of the systems

A. ***Help Desk***

- Maintain appropriate procedures to receive and respond to client calls
- Maintain data for the purpose to track, manage and report incidents and requests for service
- Provide the appropriate expert level of assistance
- Manage call escalation and resolution
- Manage the root cause analysis (RCA)
- Installation of Remote Management and Monitoring software
- Maintain proper security procedures when responding to client calls

B. ***Security***

- Implement the applicable procedures to provide the appropriate level of protective and compliancy measures to assets, data and information-handling systems to ensure the Confidentiality, Integrity and Availability of the system.
- This is applied, but not limited to:
  (1) Password policies and procedures
  (2) Authentication
  (3) Authorization/Access controls (ACL)
  (4) Security incident reporting and management
- Managed the customer's Secureworks software package – does not include forensic investigation or compromise remediation

C. ***End-user Satisfaction***

- Obtain feedback from users regarding satisfaction with the services provided
- Communicate identified issues with services
- Ensures appropriate action is implemented to correct any identified issues

DocuSign Envelope ID: B97B43EF-4F14-4BBE-8A33-EB6EE773556F

Approach

Acorn's success is based on its flexibility to shape its services to meet the customer's needs. Acorn fully recognizes that the City of South Pasadena's needs may vary, and Acorn will adjust our services as needed.

In general terms Acorn believes the best approach to support and maintenance is through proactive monitoring, patching, and protection. The Acorn team takes great pains to ensure security patches are tested and deployed, malware is kept out of the systems, SPAM is mitigated, and monitoring of all critical systems are watched closely by live Acorn team members 24/7/365. However, even with the most proactive methods in place, support and repairs are still needed.

Detailed below, in more specific terms, is Acorn's approach to providing the IT support that meets the City's needs, including an on-site IT Analyst technician along with Acorn's 24/7 remote desktop support.

1. ***Staffing***

   A. **Remote Support:** Acorn provides a team of technicians that are available 24/7/365 to provide remote technical support for the City's staff in the event the on-site personnel are unable to handle the need for technical support. The remote support technicians provide desktop support, server administration, network administration, and system monitoring.

   B. **Onsite Support:** In conjunction with the remote technical staff located at Acorn's headquarters, Acorn will provide one technicians to work at the City of South Pasadena delivering service to users as needed at all City locations. The technicians will be on-site for a standard work week of 40 hours a week 52 weeks a year, except for recognized City holidays. This staff members will maintain an IT work program that establishes priorities and balances the needs of all City Departments. From time to time, Acorn may alternate the on-site technicians in an effort to have a greater number of staff trained on the City's systems, thus, allowing Acorn to offer more redundant trained staffing support.

2. ***Ticket Generation & Tracking***
   Acorn Technology utilizes Autotask as its primary Helpdesk ticket management system. It consists of queues for Helpdesk, lab, and site where tickets are created and queued from the following sources:
   A. Incoming support calls
   B. Email sent to Helpdesk@acorntechcorp.com
   C. Monitoring (Internal monitoring system)
   D. CentraStage monitoring (RMM software)
   E. Internal requests

   All generated tickets are initially maintained and tracked in the Helpdesk queue. The Helpdesk Manager's responsibility is to monitor the queue and assign resources as necessary to ensure work is handled accurately and timely. Additionally, technicians are instructed to go into the queue as they complete tickets to work on the next ticket within the queue.

3. ***Call Handling***
   An incoming support call is answered and logged into Acorn's ticketing system. The technician will then work to resolve the caller's issue. Acorn will implement a policy whereby if the onsite

DocuSign Envelope ID: B97B43EF-4F14-4BBE-8A33-EB6EE773556F

technician is unavailable, the call can be routed to Acorn's 24/7/365 Helpdesk where a technician can remotely address the user's needs.

4. ***Lab Process & Repair***
When a PC or Server is brought into the lab, it is racked into a KVM (if available). Before any work or diagnosis is performed, machines are imaged (Full Backup). Once the backup image is confirmed, the ticket is reviewed and diagnostics/work is performed. If a hardware failure is diagnosed, the technician will determine if the equipment is under warranty. If the equipment is under warranty, the technician will contact the supporting vendor to arrange repair. If the equipment is not under warranty, the technician will contact the Account Manager to determine the next course of action. This may include researching and finding a replacement piece of equipment or pulling a spare from on-site inventory. Once work is complete, the ticket is updated with the work performed then audited by a different technician. When configuring new equipment for deployment, a ticket and install sheet are created. The install sheet contains a list of configurations and/or software requirements for the device. A technician checks off the items on the sheet as they are completed. When finished, notes are entered into the ticket and the sheet is audited by another technician.

5. ***Ticket Resolution***
Helpdesk technicians are required to monitor the Helpdesk queue for all non-call generated tickets. Our goal is to minimize down time and restore service operation as soon as possible. Tickets are handled in FIFO order, by priority with high priority tickets handled first. The Helpdesk Manager may increase priorities of tickets based on severity and user impact. Once a technician is working on an issue (call generated or not), they are required to follow the escalation procedure outlined below. Once the issue is resolved (and the user is satisfied), time, work performed and notes are entered into the ticket, and the ticket is closed.

6. ***Escalation Process***
Initial incoming calls are fielded by the next available technician and if that technician is unable to resolve an issue in an adequate amount of time or has not made progress towards a solution after 15 minutes, the technician will work to escalate the issue to the next level of support. If the next level of technical support is unable to resolve the issue in a timely manner, then the issue will be directed to Helpdesk Manager, who will determine the best way to handle the issue. Most likely this involves moving the issue to Acorn's special project team. The escalation process is closely monitored by the customer service representative.

7. ***General Monitoring/Maintenance Plan***
For all current City of South Pasadena inventory and any subsequent computers added to the System, Acorn will create and maintain the following systems, and perform the following activities per the following schedule:

   A. **Apply Windows Update Patches**
   Customer may use some software that may be negatively affected by Windows™ updates. Acorn shall evaluate the updates and if performance is acceptable, shall roll out patches across computers and servers. Roll out should occur within two weeks of the release of an update. Acorn will use its WSUS server to manage and monitor the successful deployment of updates.

   B. **Maintain Antivirus Definitions and Scan**
   Acorn shall create and maintain a suitable anti-virus strategy, which will include

DocuSign Envelope ID: B97B43EF-4F14-4BBE-8A33-EB6EE773556F

installation and updates of new antivirus definitions and a weekly scan of the entire hard drive. Cost of software, if any, is additional and shall be borne by Customer following Customer approval. Antivirus software shall monitor all servers, client machines, and e-mail. Acorn will use the server side interface of the customer's antivirus software along with CentraStage to manage and monitor the successful deployment of antivirus definitions and system scans.

C. **Maintain SPAM control**

Acorn shall create and maintain a strategy for controlling unsolicited commercial e-mail (SPAM). SPAM control must extend to both local and remote users, and must allow for rescuing messages incorrectly categorized as SPAM. If the customer does not have an adequate solution in place, Acorn will use its Barracuda Spam filtering appliances to manage and monitor spam filtering for the customer. The City currently uses the Barracuda software and is responsible for the annual licensing costs (approximately $3,000).

D. **Data Back Up for Disaster Recovery Strategy**

Acorn will use off-the-shelf products for managing and monitoring data backup. Acorn would be responsible for creating and deploying a comprehensive data back-up strategy with the following attributes:

- Comprehensive: Back up strategy includes full images from all servers. Back up strategy will be designed to retain data on a sufficient basis to protect against a catastrophic system-wide failure. Currently, this strategy includes daily back-ups for seven (7) days; weekly back-ups for four (4) weeks for an on-going basis. Additional retention can be put into place based upon customer storage availability.
- Automated: Backups occur automatically with no user intervention, and little or no administrative intervention.
- Off-Site: Backups are stored off Customer's primary site by direct network backup to the customer's secondary site. Acorn will work with the customer on a plan to store the backups in a data center that is disconnected from the customer's network. Additional costs for off-site storage, typically with a third party, will be the customer's responsibility.
- Easily Restored: Backups are stored so that they are easily restored.
- Back Up Schedule:
    1. Complete image backup of all servers: No less than daily and more frequently based up on server functionality and criticality.

E. **Disaster Recovery Solution**

Acorn recommends that it develop, provide and implement a Disaster Recovery Solution to provide a viable solution to minimize downtime should any problems arise with the customer's current server configuration; however, this service is not included in this proposal and would be part of a separate agreement which would require a one-time setup fee and a monthly lease for the required space in the data center.

F. **Domain Management**

Acorn Technology can provide domain management for the City's domains, within the scope of this agreement, which would include timely renewals and appropriate record management to ensure proper delivery of e-mail and website access.

DocuSign Envelope ID: B97B43EF-4F14-4BBE-8A33-EB6EE773556F

G. **Training**
Upon initial set up and as required for new users, Acorn will provide basic training on the proper use of the System. As requested by Customer, Acorn will have the on-site technician develop and provide training programs on application usage.

H. **Network Monitoring**
Acorn will maintain a 24/7 monitoring system using a combination of proprietary and third party monitoring software. Customer Service Representatives and Technical Service Representatives are on call 24/7 and utilize the monitoring system to assure that Customer's connectivity, latency and usage are within expected and acceptable tolerances.

8. ***Response Schedule***
Acorn shall be prepared to provide ongoing support for Customer's System implementation and maintenance, including remote access, telephone, and on-site help when necessary, per the following schedule:

Response Schedule	
Remote access assistance from qualified technician logging into Network, computer or server:	
Business Hours (7am-7pm)	**30 minutes**
All other times	**60 minutes**

9. **Number of Users/Devices**

Acorn shall provide complete ongoing technical assistance and system management on the following:

Quantity	*Devices*
TBD	Users
240	Desktop/Laptop Windows Computers
0	Mac OS devices
26	Servers (Physical and Virtual)
4	LAN Infrastructure
3	Routers
27	Wireless Access Points
19	Switches
58	Virtual Private Network (VPN)
0	Networked Copiers/Printers – Supported by a 3rd party
0	Phones – Supported by a 3rd party

DocuSign Envelope ID: B97B43EF-4F14-4BBE-8A33-EB6EE773556F

10. **Asset Cataloging, Tracking, and Replacement Plan Projection**

1. Acorn will maintain and deliver a catalog of the System, including equipment and software. The inventory list shall be updated on an "as needed" basis, and shall include all enterprise components attached to the networks within the City, including servers, workstations, firewalls, remote storage devices, core network switches, routers, and modems.
2. Acorn will work in conjunction with City to prepare and publish a catalog of enterprise software systems, in order to ensure compliance with CA Government Code Section 6270.5.
3. Acorn will work in conjunction with City to prepare and maintain a projection of the technology replacement needs of the City in the next five (5) years, (e.g., workstations, servers, switches, and any other equipment) and an upgrade schedule that includes any applications and systems.

DocuSign Envelope ID: B97B43EF-4F14-4BBE-8A33-EB6EE773556F

EXHIBIT B

Compensation Schedule

Monthly Recurring Charges (MRC)	
Term	*MRC*
3 Years	$ 22,475

If the City is interested in a 5 year agreement, the 3 year MRC rate would apply and then year 4 and year 5 pricing would increase by 5% over the year 3 rate to $23,600 per month.

Additional devices can be added to the support agreement at the following rates:

1.	MRC per Computer:	$ 50.00
2.	MRC per Server:	$ 150.00
3.	MRC per Network:	$ 100.00
5.	MRC per Phone:	$ 5.00

Additional projects outside the scope of the proposal:

The following are flat rate charges for other services not performed by an on-site technician.

1.	Deployment of New Computers:	$ 300.00
2.	Deployment of New Servers:	$ 2,500.00

The following are hourly rate charges for other services not performed by an on-site technician that are not covered in the flat rate services noted above.

1.	Tier 1 Technician (TSR1)	$ 90.00/hour
2.	Tier 2 Technician (TSR2)	$ 110.00/hour
3.	Tier 3 Technician (TSR3)	$ 125.00/hour

City Council Agenda Report

ITEM NO. 22

DATE: June 18, 2025

FROM: Todd Hileman, City Manager

PREPARED BY: Alma Medina, Assistant to the City Manager

SUBJECT: **CONSIDERATION OF APPROVAL OF AN AMENDMENT TO THE PROFESSIONAL SERVICES AGREEMENT WITH WBCP INC., FOR RECRUITMENT SEARCH SERVICES, IN THE AMOUNT NOT TO EXCEED OF $30,200, FOR A NEW TOTAL CONTRACT AMOUNT OF $45,600**

Recommendation

It is recommended that the City Council consider approval of the proposed amendment to the professional services agreement with WBCP Inc., to amend the compensation for recruitment search services for the Accounting Manager-Controller and two engineering positions in an amount not to exceed of $30,200, for a new total contract amount of $45,600.

Executive Summary

Staff is recommending approval of an amendment to the professional services agreement with WBCP, Inc., for recruitment search services, in the amount not to exceed of $30,200 for a new total contract amount of $45,600. The City is currently working with the firm for the recruitment of a Public Affairs Manager and has coordinated with the firm for the proposed additional recruitments of an Accounting Manager-Controller and two Engineering positions. Staff requests approval to this amendment to be able to recruit for the vacant positions as soon as possible and make payment to the firm.

Background

The City has several important vacancies and has been proactive in retaining recruitment firms to pursue qualified candidates for these positions. On April 2025, the City entered into a professional services agreement with WBCP, Inc., to conduct the recruitment search for the Public Affairs Manager position, in the amount not to exceed of $15,400. Since entering into this agreement, staff has worked with WBCP to prepare for the recruitments of an Accounting Manager- Controller and two engineer positions. There is an urgent need to begin recruitment efforts immediately to avoid any prolonged vacancy that could disrupt critical city operations. The firm has demonstrated an understanding of our needs and is well-positioned to identify and attract high-caliber candidates. Staff is recommending approval of the proposed amendment to add to the scope of work to add to the Accounting Manager- Controller and engineering positions recruitments, in the amount not to exceed of $30,200, for a new total contract amount of $45,600.

Analysis

Accounting Manager- Controller

The City is currently experiencing a gap in financial leadership due to the vacant Accounting Manager-Controller position. This role is vital to maintaining fiscal accountability, preparing for audits, overseeing financial reporting, and supporting budget development. Without a qualified professional in this position, the City risks delays in financial processes and increased exposure to compliance risks. Currently, the City has a consultant filling in this role, and that agreement is expected to expire on July 31, 2025.

Engineering Positions

The City is also facing a critical need for engineering expertise, specifically in the Public Works and Capital Improvement Programs. Several key infrastructure and development projects are underway or planned, including road reconstruction, utility upgrades, and stormwater improvements. The recruitment of two engineering professionals—either Engineering Assistant, Associate Civil Engineer or Senior Civil Engineer—will provide the technical capacity required to meet project timelines, ensure regulatory compliance, and reduce reliance on costly consultants.

Given current market conditions, these positions are proving difficult to fill through conventional recruitment efforts. Partnering with WBCP, Inc. for these recruitments will enable the City to access a broader and more qualified pool of candidates through targeted outreach and specialized vetting.

Given the scope and significance of these positions, it is imperative to initiate a professional and comprehensive recruitment process as soon as possible. The City does not have internal resources available to manage a recruitment of this scale within the necessary timeframe.

WBCP, Inc., has already been engaged with the City and is familiar with our organizational culture and leadership needs. Amending the existing contract to include the additional recruitments will allow us to streamline efforts, reduce onboarding time for the firm, and ensure an efficient and coordinated approach to filling both critical vacancies.

Alternatives

The City Council does have the option to not approve the proposed amendment. If not approved, the recruitment efforts would have to be undertaken by City Staff, which will take longer than if done with a firm, as we do not have such expertise within the agency at the moment.

Fiscal Impact

There is currently no fiscal impact to the general fund and no appropriation is being requested at this time. There are sufficient funds within the current budget to be able to fund this proposed amendment in the amount of $30,200.

Attachment:

Attachment No. 1 - Proposed Amendment

Attachment No. 2 - Professional Services Agreement

FIRST AMENDMENT TO PROFESSIONAL SERVICES AGREEMENT FOR RECRUITMENT SEARCH SERVICES

THIS AMENDMENT ("Amendment") is made on this 18TH day of June 2025, by and between the CITY OF SOUTH PASADENA ("CITY") and WBCP, INC. ("CONSULTANT').

RECITALS

WHEREAS, on April 21, 2025, the CITY and CONSULTANT entered into an Agreement for PROFESSIONAL SERVICES ("Agreement") for CONSULTANT to perform Recruitment Services for a Public Affairs Manager for the City; and

WHEREAS, the original Agreement was in the amount of $15,400, for Recruitment Services for a Public Affairs Manager; and

WHEREAS, the CITY desires to execute an Amendment to increase the total contract in an amount not to exceed $30,200, for a new aggregate total of Agreement and Amendments sum total of $45,600, and amend the scope of work to include Recruitment Services for a Accounting Manager- Controller and two engineering positions; and

NOW THEREFORE, THE CITY AND THE CONSULTANT AGREE AS FOLLOWS:

1. That Section 1 "Services " is amended to include Accounting Manager-Controller and Two Engineer Positions, and include the attached Proposals, Exhibit A .

2. That Section 2 "Payment" of the Agreement is hereby amended to read as follows:
   "The amount of the contract shall not exceed $45,600."

3. All other terms, conditions, and provisions of the Agreement to the extent not modified by this Amendment, shall remain in full force and effect.

"City" City of South Pasadena	"Consultant" WBCP, Inc.
By:_____ *Signature*	By:_____ *Signature*
Printed: Todd Hileman	Printed: Wendi Brown
Title: City Manager	Title: President
Date:_____	Date:_____

Attest:

By:_____
Hector Gomez, Chief City Clerk

Date:_____

Approved as to form:

By:_____
Roxanne M. Diaz, City Attorney

Date:_____

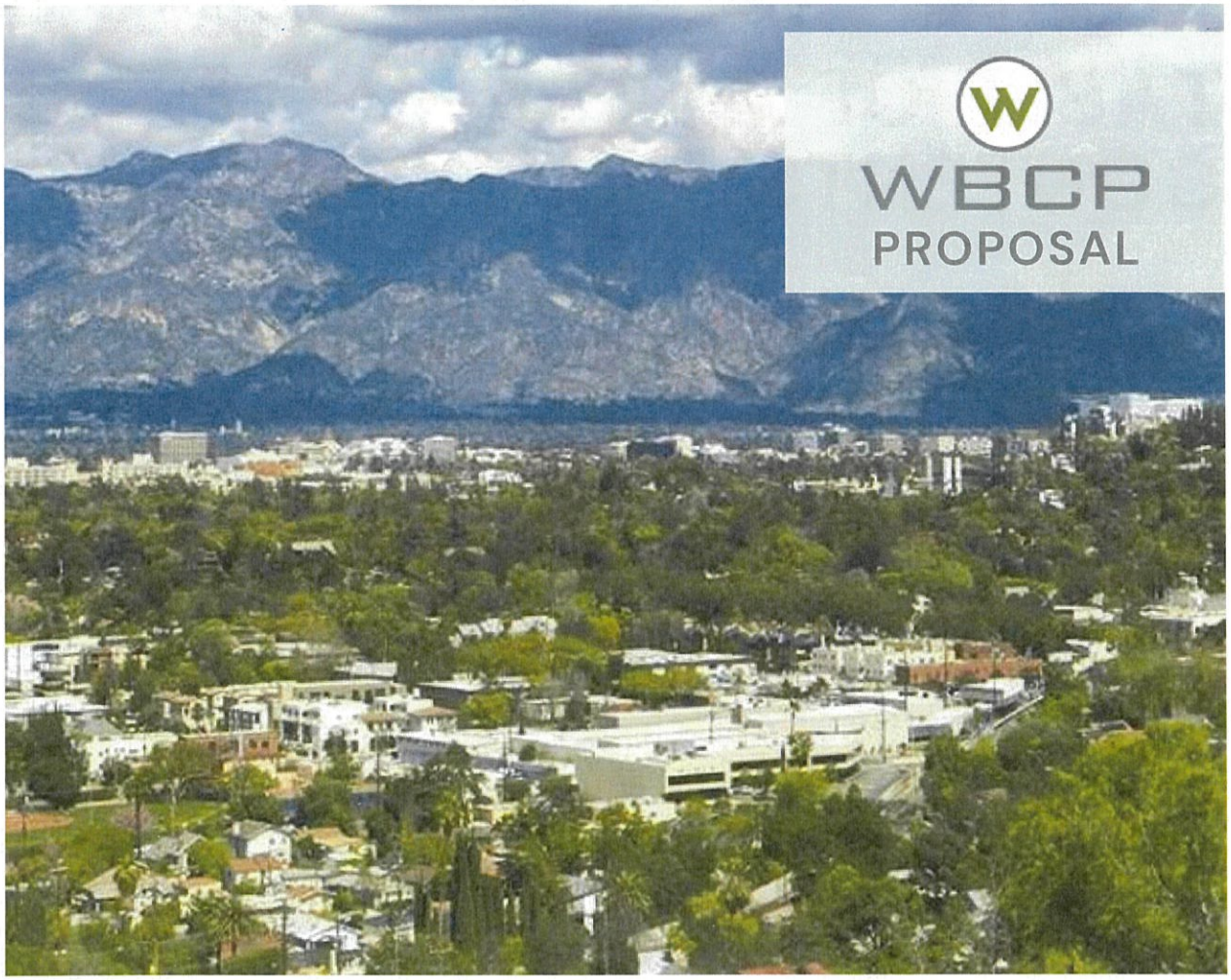

RECRUITMENT SERVICES

City of SOUTH PASADENA

ACCOUNTING MANAGER-CONTROLLER
OPTION 1: ADVERTISING & HEADHUNTING

MAY 13, 2025

TABLE OF CONTENTS

SUBJECT		PAGE
I.	COVER LETTER	1 - 2
II.	BACKGROUND/QUALIFICATIONS	3 - 8
III.	ORGANIZATIONAL CHART	9
IV.	WBCP KEY STAFF	10 - 12
V.	RECRUITMENT STRATEGY / PHASES	13
VI.	SCOPE OF WORK	14
VII.	RECRUITMENT TIMELINE	15
VIII.	REFERENCES	16
IX.	MARKETING MATERIAL EXAMPLES	16
X.	COST SHEET / TIMELINE POLICY	17
XI.	OTHER	18

I. COVER LETTER

MAY 13, 2025

1414 Mission St,
South Pasadena,
CA 91030

RE: City of South Pasadena - Accounting Manager-Controller Recruiting Services

It is our pleasure to submit this proposal for recruitment services to secure your ideal candidate to serve as the Accounting Manager-Controller of the City of South Pasadena. **WBCP has worked on many similar recruitments, and we look forward to the opportunity to partner with your organization on this critical position!**

We trust our proposal will showcase our client-focused recruitment process and will act as a testament that we are passionate about what we do to make our clients happy.

Exciting news! WBCP has partnered with the National Association of Counties (NACo) and its Public Promise Procurement (PPP) Program to offer a game-changing solution. With our new streamlined service, you can piggyback on the County of San Diego's Master Service Cooperative Agreement, saving you time, money, and effort. This opportunity is available nationwide for cities, counties, special districts, nonprofits, state agencies, and educational institutions. If this is something that is of interest for this or future procurement processes, please visit our site at: **https://wbcpinc.com/naco/**

It has been proven that great employees are looking for great employers, not just a paycheck. WBCP provides a broader perspective to recruitment services – going beyond securing the ideal candidate – we brand your organization as an employer of choice. We use eye-catching marketing materials, innovative search practices, and responsive and respectful communications with your applicants and stakeholders.

WBCP is talented at working with you to identify the strengths, challenges, and opportunities of this job, the ideal candidate, and your community and organizational culture. WBCP will work with your stakeholders to design a recruitment strategy that will include a customized engagement process. We will have a series of meetings, discussions, stakeholder interviews, and survey(s) to get to know you, the organization, the community, the culture, and the applicable staff.

My team and I know the California candidate marketplace and have many clients in your region, such as **the County of Los Angeles, County of Orange, County of San Bernardino, City of Pasadena, City of Riverside, City of Long Beach, and City of Culver City (just to name a few).** We have exceptional experience successfully recruiting for similar positions, with several recent notable recruitments including, but not limited to:

- **Internal Audit Manager, City of Pasadena, CA (active)**
- **Assistant Auditor-Controller, County of Monterey, CA (active)**
- **Division Chief - Auditor Controller, County of San Joaquin, CA**
- **City Auditor, City of Sacramento, CA**
- **Audit Supervisor, County of Santa Barbara, CA**
- **Lead Internal Auditor, County of Santa Barbara, CA**
- **Accountant-Auditor, County of Santa Barbara, CA**

To see a full list of our clients and successful recruitments, visit: https://tinyurl.com/3j9bdd79

We have over two decades of experience in public sector executive search services and have provided direct search services through WBCP since 2004. WBCP's executive recruiters are all highly personable and have unique backgrounds that make them well-equipped to take on your recruitments, as you will read their biographies in this proposal. WBCP now has offices in California, Oregon, Washington, and Texas.

I. COVER LETTER

Recruiting top talent has become the number-one topic among administrators. New and innovative recruitment strategies are critical to identifying and securing candidates with a deep understanding of how to assess and meet community needs and address future challenges. WBCP understands the complexity of community leadership, and we are prepared to provide a thorough, complete, and fair recruitment process to provide a diverse applicant pool. **Upon our 2024 year-end review, we found that over the last three years 63% of our placed candidates came from diverse backgrounds.** In fact, we are often selected and told that we bring a larger, more qualified and diverse groups of candidates than they have ever received from past professional recruiters.

Clients also choose our firm over others because of our ability to work with your support staff and stakeholder group (including boards, appointed/elected officials, and engaged constituents), manage all details of a recruitment process, and secure great candidates. Our dedication and commitment to the client are complemented by our deep understanding and ability to effectively navigate challenging political climates.

DIVERSITY

63%

of WBCP candidates placed in positions come from a diverse background

Our clients have great things to say about the quality of the service we provide and the amazing candidates we find them, In fact, many of our clients are return customers. Please feel comfortable reaching out to these organizations to get their feedback directly.

Lastly, we love what we do, and we are passionate about finding exceptional candidates who are also passionate about serving others. WBCP's staff are driven and desire to exceed client expectations. I appreciate your consideration in retaining our services and hope to have an opportunity to work with you in the future.

Best Regards,



Wendi Brown | Founder/President, WBCP, INC.
wendi@wbcpinc.com | 541-664-0376
www.wbcpinc.com

II. BACKGROUND & QUALIFICATIONS

Principal: Wendi Brown, President

Company Legal Name: WBCP, Inc. (W. Brown Creative Partners)

Tax ID: 81-5454037

Website: www.wbcpinc.com

Phone: 866-929-WBCP (9227) / 541-664-0376

Address:

- **Oregon (3 offices including WBCP, Inc. Headquarters):** 213 E Main St., Rogue River, OR, 97537; City of Grants Pass and City of Tigard
- **California (5 offices):** San Jose, Gilroy, Roseville, Los Angeles and Santa Barbara
- **Washington:** City of Seattle
- **Texas:** City of Dallas



WOMEN OWNED

WBCP is a 100% women-owned business, an S Corporation, not part of a parent company, and is a registered small business through the US Small Business Administration (SBA). WBCP is registered to do business in all states we serve, and files and pays California S Corporation and personal income tax to the State of California.

BUSINESS HISTORY

WBCP, Inc. has been in business since 2004, and serves nonprofit and public sector organizations. WBCP offers a variety of services, including: partial and full service search services for individual contributor, supervisor, management and executive management positions; human resources consulting: organizational development, training, classification and compensation studies, analysis and assessments, etc.

II. BACKGROUND QUALIFICATIONS

WBCP has over 20 years of experience providing search services for public sector and non-profit organizations. We have successfully secured professionals and provided other consulting services in **California, Arizona, Colorado, Idaho, Nevada, New York, Oregon, Texas, Utah, and Washington.**

Cities of: Anaheim (CA), Arcata (CA), Ashland (OR), Astoria (CA), Atwater (CA), Berkeley (CA), Boulder City (NV), Calistoga (CA), Central Point (OR), Ceres (CA), Chandler (AZ), Colfax (CA), Corte Madera (CA), Culver City (CA), Davis (CA), Dunsmuir (CA), Duvall (WA), Fort Worth (TX), Fremont (CA), Fresno (CA), Garibaldi (OR), Gold Hill (OR), Grants Pass (OR), Hemet (CA), Hubbard (OR), Independence (OR), Irvine (CA), Laguna Beach (CA), Larkspur (CA), Lincoln (CA), Livermore (CA), Livingston (CA), Long Beach (CA), Medford (OR), Milpitas (CA), Napa (CA), Novato (CA), Oakland (CA), Orinda (CA), Oxnard (CA), Palo Alto (CA), Park City (UT), Pasadena (CA), Petaluma (CA), Phoenix (AZ), Phoenix (OR), Pismo Beach (CA), Port Hueneme (CA), Portola Valley (CA), Redding (CA), Riverside (CA), Rochester (NY), Rocklin (CA), Rogue River (OR), Roseville (CA), Sacramento (CA), San Francisco (CA), San Rafael (CA), Santa Maria (CA), Santa Monica (CA), Santa Paula (CA), Santa Rosa (CA), Solvang (CA), Sonoma (CA), South Pasadena (CA), Sutter Creek (CA), Talent (OR), Truckee (CA), Ventura (CA), Vernon (CA), Victorville (CA), West Hollywood (CA), Windsor (CA).

Counties of: Alameda (CA), Colusa (CA), Contra Costa (CA), Del Norte (CA), El Paso (CO), Fresno (CA), Humboldt (CA), Jackson (OR), King (WA), Lake (CA), Lane (OR), Los Angeles (CA), Marin (CA), Mariposa (CA), Mendocino (CA), Merced (CA), Mono (CA), Napa (CA), Nevada (CA), Orange (CA), Placer (CA), Riverside (CA), Sacramento (CA), San Benito (CA), San Bernardino (CA), San Diego (CA), San Francisco (CA), San Joaquin (CA), San Luis Obispo (CA), San Mateo (CA), Santa Barbara (CA), Santa Clara (CA), Santa Cruz (CA), Shasta (CA), Solano (CA), Sonoma (CA), Stanislaus (CA), Tehama (CA), Tuolumne (CA), Yolo (CA), Yuba (CA).

Local and National Councils, Boards, and Districts: Bear Valley Community Services District, Boulder Creek Fire Protection District, California Prison Industry Authority (CALPIA), Cosumnes Community Services District, Hass Avocado Board (HAB), Jackson County Fire District 5, Los Angeles County Employees Retirement Association (LACERA), Mendocino County Air Quality Management District, Metropolitan Transportation Commission (MTC), Modesto Irrigation District, Monterey One Water, Nevada Irrigation District, Newark Chamber of Commerce, North American Blueberry Council/U.S. Highbush Blueberry Council (NABC/USHBC), Oakland Housing Authority, Olivehurst Public Utility District, Orange County Employees Retirement System (OCERS), Placer County Transportation Planning Agency (PCTPA), Port of Long Beach (CA), Rogue Valley Sewer Services, Sacramento Area Flood Control Agency (SAFCA), Sacramento Area Sewer District, Sacramento Employment & Training Agency (SETA), Sacramento Public Library Authority, Sacramento Suburban Water District, San Benito Council of Governments, San Benito County Water District, San Joaquin County Employees' Retirement Association (SJCERA), San Joaquin Tributaries Authority, San Rafael Sanitation District (SRSD), San Ramon Valley Fire Protection District, Sonoma County Library, South Coast Air Quality Management District, Tri-City Mental Health Authority (TCMHA), Truckee-Donner Public Utility District (TDPUD), Tuolumne Utilities District, Valley Water, West Basin Municipal Water District.

Nonprofit and Joint Powers Authorities (JPAs): California Corrections, California Municipal Utilities Association (CMUA), Center Point, Central California Legal Services (CCLS), Community Food Bank, Community Works, Dogs for Better Lives/Dogs for the Deaf, Downtown Streets Team, East Bay Regional Communications Systems Authority, First 5 (Alameda County, California Association, Fresno, Santa Barbara County, San Mateo), Futures Without Violence (Family Violence Protect Fund), Gold Coast Health, Greater Richmond Interfaith Program (GRIP), LA Public Media, Latino Public Broadcasting, Los Angeles Unified School District (LAUSD), Northern Valley Catholic Social Service (NVCSS), Options Recovery, Radio Bilingüe, Sacramento County Superior Court, Sacramento Public Library Authority (SPLA), Santa Barbara Superior Court, Santa Cruz County Animal Services Authority, Teton County Joint Housing Authority (TCJHA), Transitions-Mental Health Association, Valley Consortium for Medical Education (VCME), Water Forum, West Angeles Church of God in Christ.

Private Organizations: CDS Publications, Central California Truck and Trailer, Morton & Pitalo, NAVA, SWEED, Tekmanagement, Touchstone Accounting.

Consulting services (classification and compensation services, competency modeling, job description development, job family development, job analysis): City of Fremont (CA), City of Medford (OR), City of Santa Maria (CA), City of Santa Paula (CA), County of Humboldt (CA), County of Mariposa (CA), County of Santa Barbara (CA), and County of San Luis Obispo (CA).

II. BACKGROUND & QUALIFICATIONS

INDUSTRIES

- Organizational Leadership
- Economic Development
- Facilities & Operations
- Financial, Administrative Services, Accounting, Auditing
- Health & Human Services, Housing, Unhoused
- HR, Risk, Labor/Employee Relations
- Information Technology
- Legal, Counsel, Clerk
- Library
- Marketing, Communications, PR
- Parks & Rec, Community Services, Arts
- Planning, Environmental, Community Development, Building, Transit
- Public Safety
- Public Works, Transportation, Engineering

BELOW IS A LIST OF SIMILAR RECRUITMENTS WBCP HAS MANAGED:

FINANCIAL, ADMINISTRATIVE SERVICES, ACCOUNTING, AUDITING

- Chief Financial Officer, County of Marin Employees Retirement Agency, CA
- Chief Financial Officer, Social Services Department, County of Santa Barbara, CA
- Chief Financial Officer, Superior Court of California, County of Santa Barbara, CA
- Chief Financial Officer, West Basin Municipal Water District, CA
- Chief Financial Officer, City of West Hollywood, CA
- Chief Financial Officer, Chief of Admin II, Fire Protection District, County of Contra Costa, CA
- Division Chief - Auditor Controller, County of San Joaquin, CA
- Vice President of Finance and Administration, North American Blueberry Council, CA
- Director of Administrative Services and Finance, City of Ashland, OR
- Director of Administrative Services and Finance, City of Solvang, CA
- Director of Administrative Services, City of Irvine, CA
- Director of Contracts and Procurement, Valley Water, CA
- Director of Finance and Technology Services, City of Laguna Beach, CA
- Director of Finance, City of Ashland, OR
- Director of Finance, City of Duvall, WA
- Director of Finance, City of Grants Pass, OR
- Director of Finance, City of Laguna Beach, CA
- Director of Finance, City of Lincoln, CA
- Director of Finance, City of Sacramento, CA
- Director of Finance, City of Sonoma, CA
- Director of Finance, City of Victorville, CA
- Director of Finance, Community Food Bank, CA
- Director of Finance, County of Jackson, OR
- Director of Finance, County of Marin, CA
- Director of Finance, Monterey One Water, CA
- Director of Finance, Nevada Irrigation District, Grass Valley, CA
- Director of Finance, Transitions Mental Health Association, San Luis Obispo, CA
- Director of Finance, Tuolumne Utilities District, CA
- Director of Finance, West Angeles Church of God in Christ, CA

II. BACKGROUND & QUALIFICATIONS

FINANCIAL, ADMINISTRATIVE SERVICES, ACCOUNTING, AUDITING (CON'T)

- Director of Finance/Financial Controller, North American Blueberry Council/USHBC, CA
- Director of Financial Services, San Diego Port Authority, CA
- Assistant Director of Finance, City of Roseville, CA
- Finance and Compliance Manager, NABC/USHBC, Folsom, CA
- Finance Manager, City of Milpitas, CA
- Finance Manager, County of Santa Barbara, Department of Behavioral Wellness, CA
- Finance Manager, Town of Truckee, CA
- Financial and Administrative Services Manager, First 5 Fresno, CA
- Procurement and Contracts Manager, Valley Water, CA
- Controller, Monterey One Water, CA
- Controller, Nevada Irrigation District, CA
- Senior Accountant, Town of Truckee, CA
- Senior Financial Systems Analyst, County of Santa Barbara, CA
- Senior Principal Accountant, City of San Rafael, CA
- Senior Tax Accountant, Touchstone Accounting, OR
- Internal Audit Chief, County of Santa Barbara, CA
- Audit Supervisor, County of Santa Barbara, CA
- Lead Internal Auditor, County of Santa Barbara, CA
- Financial Systems Analyst I, County of Santa Barbara, CA
- Financial Systems Analyst I/II, County of Santa Barbara, CA
- Accounting & Finance/Treasury Managers, County of Marin, CA
- Purchasing Agent, City of Milpitas, CA
- Payroll Supervisor, County of Santa Barbara, CA
- Accountant Auditor I/II, County of Santa Barbara, CA
- Administrative Technician, Sacramento Area Flood Control Agency (SAFCA), CA
- Secretary, Sacramento Area Flood Control Agency (SAFCA), CA

Check out our full list of recruitments here: https://tinyurl.com/3j9bdd79

II. BACKGROUND & QUALIFICATIONS.....

RECRUITING WITH DIVERSITY IN MIND

Since partnering with the country's largest network of diversity job boards, ***we have seen a 21% increase in diverse applicants and a 13% increase*** *in diverse candidates placed in positions with our clients. This demonstrates WBCP's dedication to expanding outreach and removing barriers to apply, ensuring access to a highly qualified and diverse applicant pool.*

600 Diversity Job Boards:

When you post a job with WBCP, it is automatically shared across 600 diversity job boards, maximizing reach and ensuring access to a wide and inclusive pool of talent. We also utilize the largest diversity database with over 160 million resumes and 15,000 community based organization contacts to expand our search.

LinkedIn:

As LinkedIn recruiters, we have access to over 1 Billion profiles, allowing us to evaluate candidates' backgrounds, education, experience, licensure, and more.

AI:

WBCP also leverages AI tools to gather additional information to effectively reach future applicants and candidates contact information for emails and phone numbers.

WBCP understands the complexities of meeting the needs of a diverse community, and we provide a thorough, complete, and fair recruitment process.

WBCP

Streamline and Satisfy the RFP Process to receive recruiting on demand. Reach out to WBCP today for more information.

PUBLIC PROMISE PROCUREMENT Powered by NACo

COUNTY OF SAN DIEGO

Scan to learn more!

II. BACKGROUND & QUALIFICATIONS.....

WHY CHOOSE WBCP

Proven Expertise:

- **Over 20 Years in Business and 100+ Years of Experience:** With over a century of combined experience, our recruitment professionals excel in public service sectors, including cities, counties, utilities, special districts, joint powers authorities, and non-profits. Our proven track record ensures expertise tailored to your needs.

- **100% Success Rate:** In 2024, we achieved a 100% success rate, successfully filling every position we managed including partial and full scope services from engineering, planning, finance, health and human services, legal, legislative, hard-to-fill civil service positions, and many more! We deliver results no matter what the challenge.

Employer Recognition: WBCP has been recognized as Oregon's TOP 100 EMPLOYERS.

HR Teams Trust Us: We simplify the recruitment process, managing every detail so HR teams can focus on other priorities. From sourcing candidates to scheduling interviews and providing updates, our seamless approach saves time, reduces stress, and ensures results.

Strategic Marketing and Advertising: Our marketing team designs targeted campaigns using diverse, cost-effective channels powered by AI. These campaigns maximize reach while staying within budget and include:

- Diverse Applicant Pools: Access to over 600 diversity-focused job boards, 15,000 diversity affiliations, and 120 million resumes ensures diversity is integral to our process.
- LinkedIn Recruiter Expertise: With access to 230 million U.S. profiles, we connect you with top-tier talent.
- AI-Driven Talent Acquisition: Advanced AI strategies enhance efficiency and uncover new candidate engagement opportunities.

Trusted Partners and Culture Cultivators: We go beyond finding candidates by building trust with your team and stakeholders. Our tailored strategies align top talent with your organizational culture, ensuring a collaborative and thoughtful recruitment process.

Recruiting with Competencies: Ensures a fair, measurable, and effective hiring process. This strategic approach helps identify the client's needs and then assesses candidates on the critical skills and behaviors for success.

Benefits:

- Fairness: Focuses on role-specific competencies.
- Measurability: Provides objective evaluation criteria.
- Better Matches: Aligns talent with organizational and cultural needs.
- Equitable: Reduces bias with standardized assessments.

Recruiting with competencies delivers high-quality, measurable solutions that ensure the best candidates for your team's success and cultural alignment.

Timely and effective background and Reference Checks: WBCP partners with a trusted third party for thorough background checks and relies on a 30-year public safety veteran, retired as a police chief, and an expert in employee investigations, to conduct expert reference verifications. This ensures accuracy, professionalism, and confidence in every hiring decision.

Guaranteed Satisfaction: We stand behind our work with a 12-24 month guarantee. If the initial placement doesn't work out, we will conduct a replacement search at no additional consulting fee, ensuring lasting value for your investment.

III. BACKGROUND & QUALIFICATIONS

EXECUTIVE LEADERSHIP

WENDI BROWN
President/Sr. Recruiter

RICHARD KUHNS, Psy.D
Vice President of Recruitment & Culture

HEATHER JACK
Director of Finance & Operations

MANAGEMENT/RECRUITERS

JOSETTE REINA-LUKEN
Executive Recruiter

TERI MAUS-NISICH
Sr. Executive Recruiter

LEVI KUHLMAN
Executive Recruiter

LAUREN GERSON
Executive Recruiter

DD GRISSOM
Talent Acquisition Manager

MAGGIE ALEXANDRE
Executive Search Associate

STEPHANIE LAWSON
Recruitment Manager

KARLEE BECKSTEAD
Marketing & Communications Manager

ADMINISTRATIVE PROFESSIONALS

LEAH MURPHY
Project Manager

NAOMI ORR
Project Manager

LANE NOLAN
Project Manager

SHANI PEARCE
Project Manager

MARTHA CHAVARRIA
Talent Acquisition Specialist

SOFIA QURAISHI
Talent Acquisition Specialist

RYAN BROWN
IT Technician II

ANGELA EDWARDS
Talent Acquisition Specialist

MADDY SCHWARZ
Marketing & Events Coordinator

ALEX LE
Copywriter

AIMEE KUHLMAN
Operations Assistant

JAMI GILMAN
Marketing Assistant

JAYCE HERBOLD
Recruitment Assistant

KATIE GARROTTO
Recruitment Assistant

CREATIVE PARTNERS / SENIOR ADVISORS

BRUCE GRIFFITHS
Organizational Development/ IO Psychologist

STEVE BROWN
National Account Manager

BILL LANDIS
Public Safety Investigator

ALAN ROSEN
Executive Recruiter/ Sr. Facilitator

BERNIE LICATA
Organizational Development Consultant

SCOTT BECKSTEAD, JD
Sr. Advisor

MIKE LUKEN
Sr. Facilitator

WILLIAM RACOWSCHI
Fire/Public Safety

CHRISTY WURSTER
Sr. Facilitator

RIVKAH SASS
Retired Library Director/Sr. Facilitator

WBCP STATISTICS

WBCP is a 100% woman-owned business. Staff and consultants are a diverse mix of gender/ethnicity
Age ranges from 24 - 70+



IV. WBCP KEY STAFF

WENDI BROWN
Lead Consultant/ Sr. Executive Recruiter



I am the President of WBCP, with over 20 years of experience in marketing and advertising and combine this with my background in recruiting to successfully place hard-to-fill, management, and executive positions. My team and I are passionate about helping organizations improve their recruitment services, place great talent, conduct department assessments, redesign antiquated processes, revise job descriptions, conduct salary and benchmark studies, and more. I have worked in various industries – advertising and public relations, national real estate franchisor, global manufacturing – and I have worked with nonprofit and public sector organizations since 1999. Formerly, I was an internal Human Resources Consultant for the County of Orange, California, providing countywide communications, human resources, executive search, and recruiter training services to the Assistant Chief Executive Office/Human Resources Director and, at that time, 25 decentralized departments, with 17,000 employees, serving a community of 300,000. I have a Bachelor's of Science in Business Administration with an emphasis in Marketing from Colorado Technical University; have earned several certificates in Project Management, Global Business, Marketing, and Human Resources; and working toward a Master's in Management at Southern Oregon University

RICHARD KUHNS
Vice President of Recruiting & Culture



Richard Kuhns is a retired County Administrative Officer with over 28 years of experience in the Public Sector. He is currently the VP of Recruiting and Organizational Culture for WBPC. Richard began his career in Law Enforcement, transferring his focus to Administration where he served as the Director of Housing and Community Action, Behavioral Health, General Services, and Solid Waste. Richard has a "find a way, to find a way" mentality. With his vast knowledge and experience in the Public Sector he has an intuitive understanding of working with government leaders, policy makers, and the public. Richard achieved a Bachelor of Science in Business Management, a Master of Arts in Behavioral Science with an emphasis in Conflict Resolution and Negotiations, and a Doctorate in Clinical Psychology. For the past three years Richard has worked as an Executive Recruiter and Behavioral Health Consultant. As a Consultant, he worked with several Northern California Counties creating and implementing the newly state mandated 24/7 Mobile Crisis. He has now focused his time and efforts on assisting WBCP clients in finding and securing the top candidate for your organization.

IV. WBCP KEY STAFF

TERRI MAUS-NISICH
Sr. Executive Recruiter



Terri Maus-Nisich holds a pivotal role as one of our Senior Executive Recruiters, leveraging her extensive background as a distinguished leader in local government. With a local government career spanning over 40 years, Terri's journey includes transformative roles within the County of Santa Barbara, where she ascended from Parks Director to Assistant County Executive Officer, overseeing vital municipal and health/human service departments. Her remarkable impact encompasses leadership in Homeless Services, Communications, and Emergency Management, driving community engagement, disaster recovery, and support for vulnerable populations. Before her tenure in Santa Barbara, Terri spent 15 years with the City of Santa Clarita in roles ranging from analyst to Deputy City Manager. Throughout her remarkable career, Terri prioritized strategic planning, organizational development, and innovative problem-solving, garnering numerous awards. She holds a Bachelor's Degree from UC Santa Barbara, a Masters of Public Administration from Cal State Northridge, and a graduate certificate from Harvard University's JFK School of Government.

LAUREN GERSON
Executive Recruiter



Lauren Gerson is a seasoned Executive Recruiter at WBCP, where she draws on over 15 years of experience in career services, customer relations, and operations. Her recruiting expertise extends across various industries, with notable success in health and human services, utilities, and finance. Lauren has helped organizations across multiple states fill hard-to-hire positions at every level, from individual contributors to executives. Lauren's diverse professional journey began in operations and events management, where she honed her expertise in human resources, business management, and regulatory compliance. She later transitioned to career services, and prior to joining WBCP, worked with a career coaching company helping job-seekers better leverage their skills and overcome barriers to employment. Lauren holds a Bachelor's degree in Philosophy from Whittier College. She brings a unique perspective to her role, and is committed to making a positive impact both professionally and personally. With her unwavering dedication and client-centric focus, Lauren continues to drive success and excellence in executive recruitment at WBCP.

IV. WBCP KEY STAFF

LEVI KUHLMAN
Executive Recruiter



Levi Kuhlman is an Executive Recruiter at WBCP, and an experienced professional with a multifaceted career spanning across executive recruitment, real estate, and entrepreneurship. He has worked extensively with local municipalities, special districts, and not-for-profit organizations across the Western region, with a focus in California, Oregon, and Idaho. Levi has conducted many successful recruitments in various industries including planning, rent stabilization and housing, engineering, finance, city management, transportation and transit, community development, building and safety, public safety, risk management, and information technology. Levi serves as a skilled and diplomatic liaison, earning a reputation for his personalized approach to recruiting. Before joining the ranks of WBCP, he advocated on behalf of tenants, landlord, and clients. With a diverse skill set and a commitment to excellence, Levi continues to make significant contributions to WBCP, his clients, and broadening the professional community one recruitment at a time.

REVIEW OTHER EMPLOYEES & CONSULTANT PARTNERS ON OUR WEBSITE: WWW.WBCPINC.COM/WBCP-TEAM

V. RECRUITMENT STRATEGY / PHASES

WBCP knows how to customize your search strategy to meet your unique recruitment needs. We customize your recruitment based on the specific needs, target audience, and challenges for each recruitment; however, below is a baseline approach for most recruitments.

PHASE I

CLIENT & STAKEHOLDER MEETINGS

We require the Client and/or Search Committee, and other stakeholders identified by the Client, be involved in the initial and final phases of this recruitment. These are critical phases to ensure we obtain a clear sense of the priorities and the successful hire of the right candidate. WBCP will meet with various stakeholders as warranted by the Client and the level of the position in the organization. These meetings will allow us an opportunity to gather information and gain knowledge about the organization, community, and unique aspects of the recruitment to design the ideal candidate professional profile, advertising materials, and strategic approach

FEEDBACK OUTCOME / TIMELINE DEVELOPMENT

Following the Client/stakeholder meetings, we will develop a detailed timeline for the recruitment along with a proposed advertising plan for approval.

CREATIVE DEVELOPMENT

Immediately following the client feedback activities, we will draft the competencies for the recruitment and advertising material/recruitment brochure for the Client's review. This information will summarize what was learned from Client-related interviews and will be used to advertise the opening.

PHASE II

MARKETING STRATEGY & IMPLEMENTATION

WBCP will execute a customized marketing/ad plan once the job announcement is created. An ad plan could include the following (based on assumptions), and will be customized based on information gathered in Phase I:

DIGITAL ADVERTISING WITH DIVERSITY IN MIND

WBCP utilizes digital advertising to obtain diverse applicant pools, leveraging local and national job boards, associations, and social media. In partnership with a diversity platform, our postings reach up to 600 local employment and diversity websites, connecting across 15,000+ community organizations and niche sites, tapping into a job bank of 2 million resumes. Upon our 2024 year-end review, we found that over the last three years 63% of our placed candidates came from diverse backgrounds.

EMAIL & DIRECT MAIL ADVERTISING

In addition to tapping into WBCP's existing pool of potential applicants, we have the capability to access various professional lists. We actively seek out additional lists through associations, contacts, and other strategic channels.

SOURCING/HEADHUNTING

WBCP employs a proactive approach by reaching out to targeted individuals and cultivating new connections through referrals from reputable sources. As a LinkedIn recruiter, we harness the power of over 350 million profiles to identify and engage with ideal candidates. Additionally, WBCP utilizes cutting-edge AI tools for precise Boolean searches, enabling us to uncover niche candidates effectively.

COMMUNICATION WITH CLIENT

We will provide weekly updates on the progress of this search unless the client prefers more or less frequent communications. We tailor our communications in accordance with our Client's needs.

VI. SCOPE OF WORK

- Facilitate initial kick-off meeting with Client and other meetings that may include Executive Leadership, staff, community, and other stakeholders to assist with identifying the ideal candidate profile.
- Assist Client hiring authority/stakeholders in modifying the job description (as needed), and develop a recruitment announcement, marketing materials, and advertising plan for the recruitment.
- Attend all other meetings and engagements as needed or identified by the Client.
- Implement advertising plan including: publication, sourcing/headhunting, direct mail, and other online and email marketing efforts.
- Provide timely updates and progress reports to the client regarding search services; every two weeks or as Client identifies is needed.

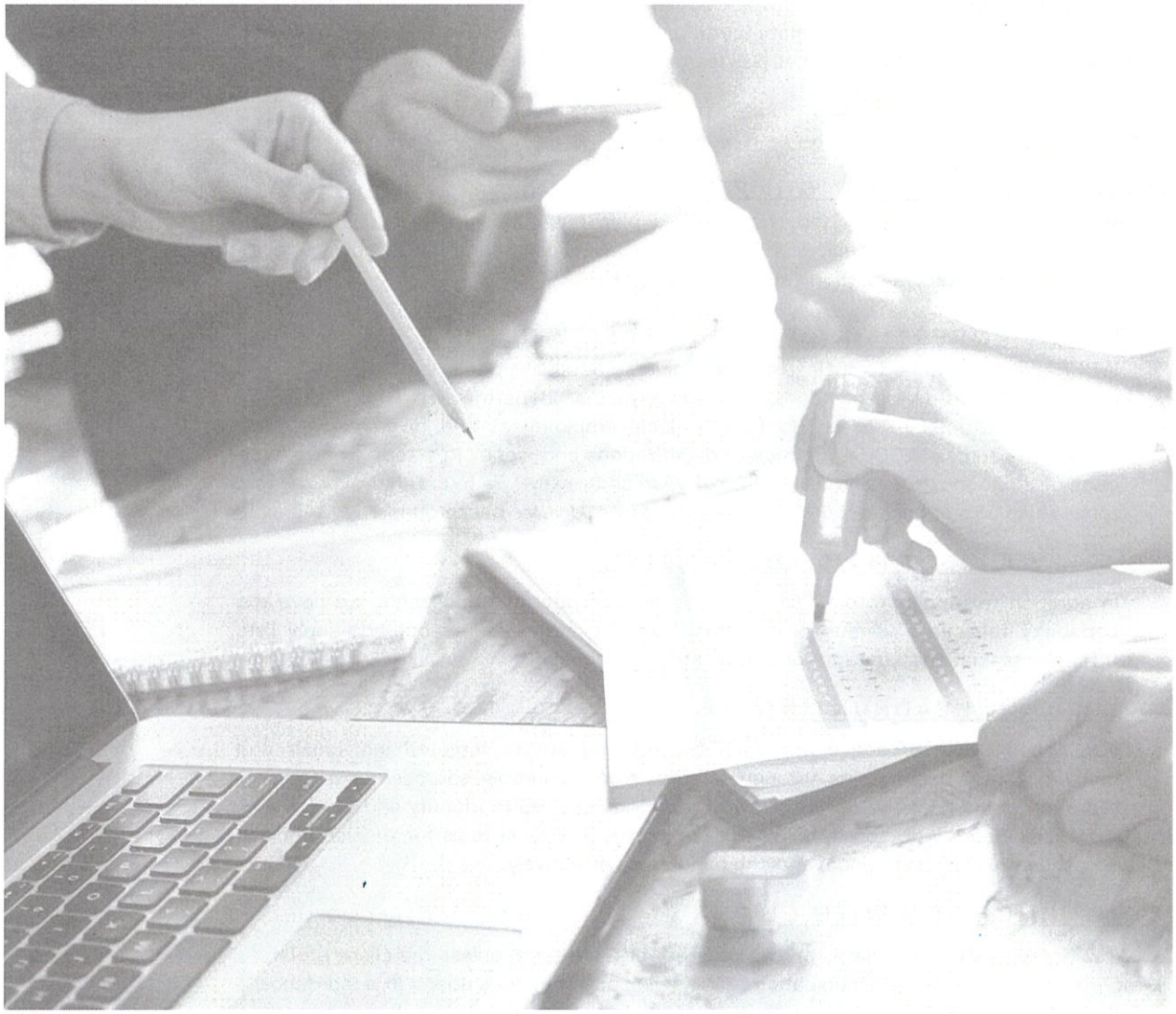

VII. RECRUITMENT TIMELINE

BELOW IS A SAMPLE OF AN EXECUTIVE SEARCH TIMELINE THAT WBCP WILL CUSTOMIZE FOR THIS RECRUITMENT

Week 1:

- Secure services with search firm, WBCP, Inc.
- WBCP: review search parameters and recruiting processes with Client
  - Interview with hiring authority and other stakeholders for competencies
  - Identification of advertising venues and ideal candidate prospects
  - Calls, meetings, or coordination with other stakeholders for information gathering

Weeks 1 + 2:

- Develop and approvals: recruitment process, deadlines, ad plan and strategy, recruitment timeline and brochure
- Print coordination (if applicable)

Weeks 2 + 3:

- **OPEN RECRUITMENT AND AD PLAN:** Implement marketing plan and direct mail (if applicable)
- Timeline may be extended if direct mail piece is included (i.e., print/postage)

Weeks 4, 5, + 6:

- Receive applications – WBCP may receive applications (if using our applicant tracking system) and/or receive updates from clients on the results of the recruitment.

Weeks 7 + 8:

- **CLOSE RECRUITMENT AND ADVERTISING**



VIII. REFERENCES

1-City of Sacramento, California

Positions Filled:

- City Auditor

Contact Information:

- Lisa Kaplan, Council Member - D1, LKaplan@cityofsacramento.org

2-County of Santa Barbara, California

Positions Filled:

- Internal Audit Chief
- Audit Supervisor
- Lead Internal Auditor

Contact Information:

- Betsy Schaffer, Auditor-Controller, BSchaffer@co.santa-barbara.ca.us

3-County of San Joaquin, California

Positions Filled:

- Division Chief - Auditor Controller
- Payroll Division Chief
- Director of Finance

Contact Information:

- Monica Nino, former County Administrator at San Joaquin County, Current County Administrator at Contra Costa County, Monica.Nino@cao.cccounty.us | 925-655-2075

IX. MARKETING MATERIAL EXAMPLES

Click below to see our marketing samples for similar positions. To see all of our brochures, visit: wbcpinc.com/closed-jobs-private/ and use the password: wbcp202510*

- Internal Audit Manager, City of Pasadena, CA (active)
- Assistant Auditor-Controller, County of Monterey, CA (active)
- Division Chief - Auditor Controller, County of San Joaquin, CA
- Payroll Division Chief, County of San Joaquin, CA
- City Auditor, City of Sacramento, CA
- Internal Audit Chief, County of Santa Barbara, CA
- Audit Supervisor, County of Santa Barbara, CA
- Lead Internal Auditor, County of Santa Barbara, CA
- Accountant-Auditor, County of Santa Barbara, CA

X. COST SHEET / TIMELINE POLICY

WBCP will not limit the number of hours we work on a recruitment, rather we charge a flat rate and will spend the time necessary to ensure we are successful. Consulting fees will be billed once the position is open for applications and the advertising campaign has been launched.

SERVICE COST PER RECRUITMENT

ACCOUNTING MANAGER-CONTROLLER

Description of Services/Deliverables:	Inclusive Rate per Recruitment:
Consulting Services: Phases I-II in the proposal's recruitment strategy/phases section.	$5,900 (flat rate)
Expenses Include: Document shipping fees/delivery charges to facilitate virtual meetings; brochure/graphic design ($950); marketing and advertising which may include: print and postage (if applicable); online job boards; social media; sourcing; and may include flat fee pricing for: LinkedIn $395, InMails $300, Circa Diversity Job Boards $295, Zoom Info $299. These expenses will be billed based on what is expended and based on the needs of the client/recruitment.	Up to $4,500 (not to exceed)

Cost and Timeline Policy

To ensure the success and efficiency of our recruitment services, the following policies regarding cost and timelines are in place:

1. **Timeline Development:** Timelines provided to our clients are valid for **10 business days**. If a timeline is not secured or confirmed within this period, it may no longer be available. In such cases, the timeline may be reassigned to another client, and a revised timeline will be provided.

These policies ensure clarity, fairness, and high-quality outcomes for all parties involved.

XI. OTHER

INSURANCE

WBCP and its sub-consultants have reviewed the contractual agreement and the Insurance Requirements. If selected, WBCP will execute said agreement and will provide the required insurance documents. WBCP will submit certificates of insurance as evidence of the required coverage limits. Insurance policies include: liability, errors and omissions, workers compensation, and vehicle insurance.

CONFIDENTIALITY SAFEGUARDS

Confidentiality is paramount in the work we do. We ensure that the client and candidate information we receive, and conversations with our client (and certainly discussions in closed session) are kept confidential. There are several physical safeguards we have in place including: locked and alarmed office space, password, and encryption protected information on our computers and servers, multiple backup systems. As information is shared with our client, we discuss the importance of confidentiality and why it is important to the candidates they are considering but also brands the organization appropriately. We also ask candidates who are interviewed to keep candidate information confidential, as they may see or meet a candidate during the process. We emphasize that confidentiality is not just until the recruitment is completed, and a candidate is hired, confidentiality is in perpetuity. Leaked information is not a reputation that a client wants to receive, as this could deter future applicants from applying.

ORGANIZATIONAL DIVERSITY STATEMENT

WBCP embraces cross-cultural diversity and we are committed to equitable treatment and elimination of discrimination in all its forms at all organizational levels and throughout all consulting practices, including search services. We strive to reach diverse groups of people to inform them of leadership opportunities. **Upon our 2024 year-end review, we found that over the last three years 63% of our placed candidates came from diverse backgrounds.** We will make extensive efforts to attract a qualified applicant pool that represents a broad range of gender and ethnically diverse individuals.

Wendi Brown, President — May 13, 2025
Date

Todd Hileman, City Manager — 5/13/2025
Client, Title — Date

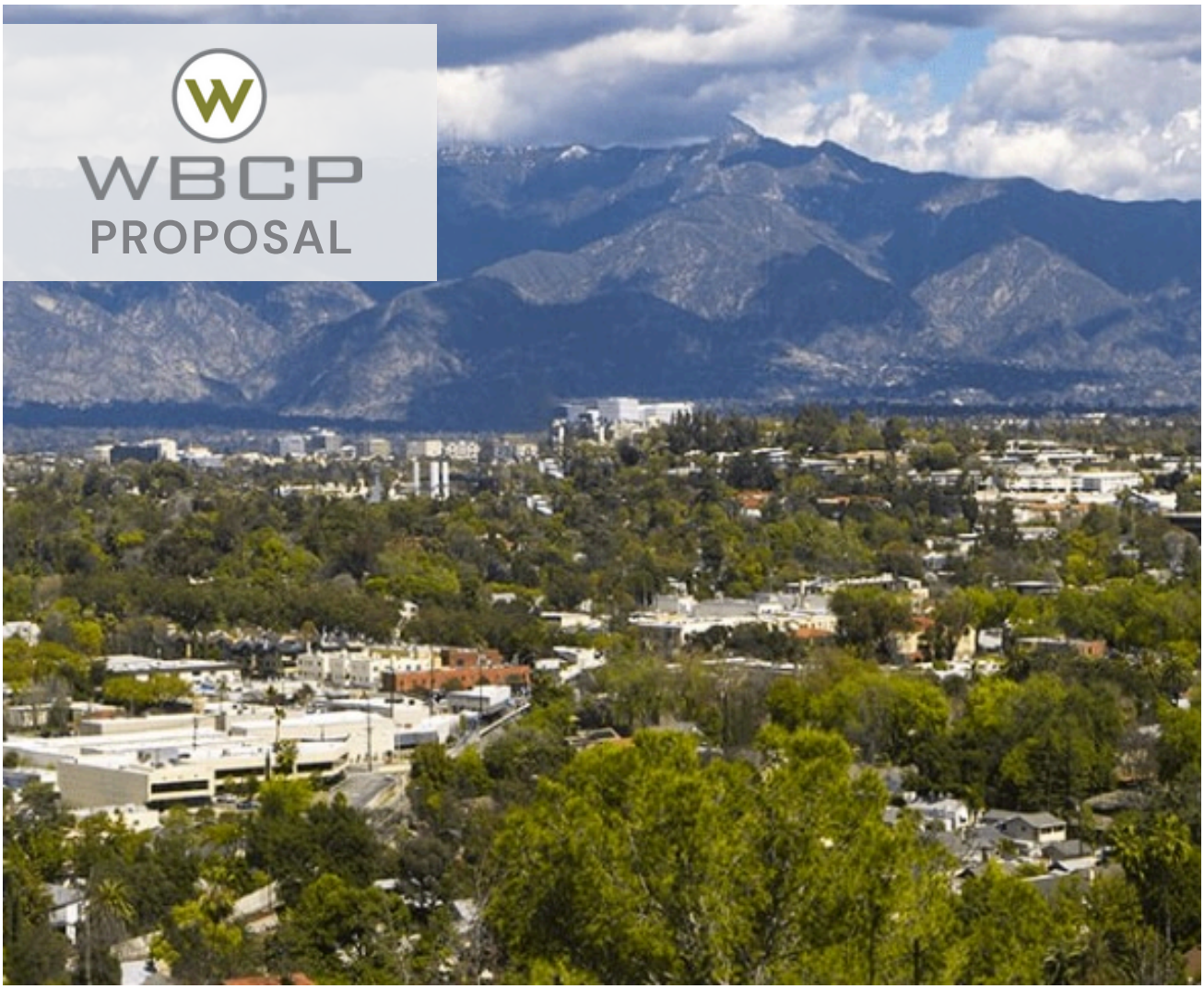

WBCP
PROPOSAL

RECRUITMENT SERVICES

City of SOUTH PASADENA

ENGINEERING ASSISTANT, ASSOCIATE CIVIL ENGINEER OR SENIOR CIVIL ENGINEER (2 VACANCIES)

OPTION 1: ADVERTISING & HEADHUNTING

JUNE 5, 2025

TABLE OF CONTENTS

SUBJECT		PAGE
I.	COVER LETTER	1 - 2
II.	BACKGROUND/QUALIFICATIONS	3 - 8
III.	ORGANIZATIONAL CHART	9
IV.	WBCP KEY STAFF	10 - 12
V.	RECRUITMENT STRATEGY / PHASES	13
VI.	SCOPE OF WORK	14
VII.	RECRUITMENT TIMELINE	15
VIII.	REFERENCES	16
IX.	MARKETING MATERIAL EXAMPLES	16
X.	COST SHEET / TIMELINE POLICY	17
XI.	OTHER	18

I. COVER LETTER

JUNE 5, 2025

Josette Reina-Luken
1414 Mission St,
South Pasadena, CA 91030

RE: City of South Pasadena - Engineering Series Recruiting Services

It is our pleasure to submit this proposal for recruitment services to secure your ideal candidates to serve as engineering professionals for the City of South Pasadena. **WBCP has worked on many Engineering recruitments, and we look forward to the opportunity to partner with your organization on this critical position!**

We trust our proposal will showcase our client-focused recruitment process and will act as a testament that we are passionate about what we do to make our clients happy.

Exciting news! WBCP has partnered with the National Association of Counties (NACo) and its Public Promise Procurement (PPP) Program to offer a game-changing solution. With our new streamlined service, you can piggyback on the County of San Diego's Master Service Cooperative Agreement, saving you time, money, and effort. This opportunity is available nationwide for cities, counties, special districts, nonprofits, state agencies, and educational institutions. If this is something that is of interest for this or future procurement processes, please visit our site at: **https://wbcpinc.com/naco/**

It has been proven that great employees are looking for great employers, not just a paycheck. WBCP provides a broader perspective to recruitment services – going beyond securing the ideal candidate – we brand your organization as an employer of choice. We use eye-catching marketing materials, innovative search practices, and responsive and respectful communications with your applicants and stakeholders.

WBCP is talented at working with you to identify the strengths, challenges, and opportunities of this job, the ideal candidate, and your community and organizational culture. WBCP will work with your stakeholders to design a recruitment strategy that will include a customized engagement process. We will have a series of meetings, discussions, stakeholder interviews, and survey(s) to get to know you, the organization, the community, the culture, and the applicable staff.

My team and I know the California candidate marketplace and have many clients in your region, such as the **County of Los Angeles, County of Orange, County of San Bernardino, City of Pasadena, City of Riverside, City of Long Beach, and City of Culver City (just to name a few).** We have exceptional experience successfully recruiting for similar positions, with several recent notable recruitments including, but not limited to:

- **Principal Engineer & Engineering Series, San Rafael Sanitation District, CA**
- **Multiple Engineering/Project Management Roles, City of Petaluma, CA**
- **Multiple Engineering Positions, City of Fort Worth, TX (active)**
- **Senior Engineer, Environmental/Water Utilities, City of Roseville, CA**

To see a full list of our clients and successful recruitments, visit: https://tinyurl.com/3j9bdd79

We have over two decades of experience in public sector executive search services and have provided direct search services through WBCP since 2004. WBCP's executive recruiters are all highly personable and have unique backgrounds that make them well-equipped to take on your recruitments, as you will read their biographies in this proposal. WBCP now has offices in California, Oregon, Washington, Texas, and Colorado.

I. COVER LETTER

Recruiting top talent has become the number-one topic among administrators. New and innovative recruitment strategies are critical to identifying and securing candidates with a deep understanding of how to assess and meet community needs and address future challenges. WBCP understands the complexity of community leadership, and we are prepared to provide a thorough, complete, and fair recruitment process to provide a diverse applicant pool. **Upon our 2024 year-end review, we found that over the last three years 63% of our placed candidates came from diverse backgrounds.** In fact, we are often selected and told that we bring a larger, more qualified and diverse groups of candidates than they have ever received from past professional recruiters.

Clients also choose our firm over others because of our ability to work with your support staff and stakeholder group (including boards, appointed/elected officials, and engaged constituents), manage all details of a recruitment process, and secure great candidates. Our dedication and commitment to the client are complemented by our deep understanding and ability to effectively navigate challenging political climates.

Our clients have great things to say about the quality of the service we provide and the amazing candidates we find them, In fact, many of our clients are return customers. Please feel comfortable reaching out to these organizations to get their feedback directly.

DIVERSITY

63%

of WBCP candidates placed in positions come from a diverse background

Lastly, we love what we do, and we are passionate about finding exceptional candidates who are also passionate about serving others. WBCP's staff are driven and desire to exceed client expectations. I appreciate your consideration in retaining our services and hope to have an opportunity to work with you in the future.

Best Regards,



Wendi Brown | Founder/President, WBCP, INC.
wendi@wbcpinc.com | 541-664-0376
www.wbcpinc.com

II. BACKGROUND & QUALIFICATIONS.....

Principal: Wendi Brown, President

Company Legal Name: WBCP, Inc. (W. Brown Creative Partners)

Tax ID: 81-5454037

Website: www.wbcpinc.com

Phone: 866-929-WBCP (9227) / 541-664-0376

Address:

- **Oregon (3 offices including WBCP, Inc. Headquarters):** 213 E Main St., Rogue River, OR, 97537; City of Grants Pass and City of Tigard
- **California (5 offices):** San Jose, Gilroy, Roseville, Los Angeles and Santa Barbara
- **Washington:** City of Seattle
- **Texas:** City of Dallas



WOMEN OWNED

WBCP is a 100% women-owned business, an S Corporation, not part of a parent company, and is a registered small business through the US Small Business Administration (SBA). WBCP is registered to do business in all states we serve, and files and pays California S Corporation and personal income tax to the State of California.

BUSINESS HISTORY

WBCP, Inc. has been in business since 2004, and serves nonprofit and public sector organizations. WBCP offers a variety of services, including: partial and full service search services for individual contributor, supervisor, management and executive management positions; human resources consulting: organizational development, training, classification and compensation studies, analysis and assessments, etc.

II. BACKGROUND QUALIFICATIONS.....

WBCP has over 20 years of experience providing search services for public sector and non-profit organizations. We have successfully secured professionals and provided other consulting services in **California, Arizona, Colorado, Idaho, Nevada, New York, Oregon, Texas, Utah, and Washington.**

Cities of: Anaheim (CA), Arcata (CA), Ashland (OR), Astoria (CA), Atwater (CA), Berkeley (CA), Boulder City (NV), Calistoga (CA), Central Point (OR), Ceres (CA), Chandler (AZ), Colfax (CA), Corte Madera (CA), Culver City (CA), Davis (CA), Dunsmuir (CA), Duvall (WA), Fort Worth (TX), Fremont (CA), Fresno (CA), Garibaldi (OR), Gold Hill (OR), Grants Pass (OR), Hemet (CA), Hubbard (OR), Independence (OR), Irvine (CA), Laguna Beach (CA), Larkspur (CA), Lincoln (CA), Livermore (CA), Livingston (CA), Long Beach (CA), Medford (OR), Milpitas (CA), Napa (CA), Novato (CA), Oakland (CA), Orinda (CA), Oxnard (CA), Palo Alto (CA), Park City (UT), Pasadena (CA), Petaluma (CA), Phoenix (AZ), Phoenix (OR), Pismo Beach (CA), Port Hueneme (CA), Portola Valley (CA), Redding (CA), Riverside (CA), Rochester (NY), Rocklin (CA), Rogue River (OR), Roseville (CA), Sacramento (CA), San Francisco (CA), San Rafael (CA), Santa Maria (CA), Santa Monica (CA), Santa Paula (CA), Santa Rosa (CA), Solvang (CA), Sonoma (CA), South Pasadena (CA), Sutter Creek (CA), Talent (OR), Truckee (CA), Ventura (CA), Vernon (CA), Victorville (CA), West Hollywood (CA), Windsor (CA).

Counties of: Alameda (CA), Colusa (CA), Contra Costa (CA), Del Norte (CA), El Paso (CO), Fresno (CA), Humboldt (CA), Jackson (OR), King (WA), Lake (CA), Lane (OR), Los Angeles (CA), Marin (CA), Mariposa (CA), Mendocino (CA), Merced (CA), Mono (CA), Napa (CA), Nevada (CA), Orange (CA), Placer (CA), Riverside (CA), Sacramento (CA), San Benito (CA), San Bernardino (CA), San Diego (CA), San Francisco (CA), San Joaquin (CA), San Luis Obispo (CA), San Mateo (CA), Santa Barbara (CA), Santa Clara (CA), Santa Cruz (CA), Shasta (CA), Solano (CA), Sonoma (CA), Stanislaus (CA), Tehama (CA), Tuolumne (CA), Yolo (CA), Yuba (CA).

Local and National Councils, Boards, and Districts: Bear Valley Community Services District, Boulder Creek Fire Protection District, California Prison Industry Authority (CALPIA), Cosumnes Community Services District, Hass Avocado Board (HAB), Jackson County Fire District 5, Los Angeles County Employees Retirement Association (LACERA), Mendocino County Air Quality Management District, Metropolitan Transportation Commission (MTC), Modesto Irrigation District, Monterey One Water, Nevada Irrigation District, Newark Chamber of Commerce, North American Blueberry Council/U.S. Highbush Blueberry Council (NABC/USHBC), Oakland Housing Authority, Olivehurst Public Utility District, Orange County Employees Retirement System (OCERS), Placer County Transportation Planning Agency (PCTPA), Port of Long Beach (CA), Rogue Valley Sewer Services, Sacramento Area Flood Control Agency (SAFCA), Sacramento Area Sewer District, Sacramento Employment & Training Agency (SETA), Sacramento Public Library Authority, Sacramento Suburban Water District, San Benito Council of Governments, San Benito County Water District, San Joaquin County Employees' Retirement Association (SJCERA), San Joaquin Tributaries Authority, San Rafael Sanitation District (SRSD), San Ramon Valley Fire Protection District, Sonoma County Library, South Coast Air Quality Management District, Tri-City Mental Health Authority (TCMHA), Truckee-Donner Public Utility District (TDPUD), Tuolumne Utilities District, Valley Water, West Basin Municipal Water District.

Nonprofit and Joint Powers Authorities (JPAs): California Corrections, California Municipal Utilities Association (CMUA), Center Point, Central California Legal Services (CCLS), Community Food Bank, Community Works, Dogs for Better Lives/Dogs for the Deaf, Downtown Streets Team, East Bay Regional Communications Systems Authority, First 5 (Alameda County, California Association, Fresno, Santa Barbara County, San Mateo), Futures Without Violence (Family Violence Protect Fund), Gold Coast Health, Greater Richmond Interfaith Program (GRIP), LA Public Media, Latino Public Broadcasting, Los Angeles Unified School District (LAUSD), Northern Valley Catholic Social Service (NVCSS), Options Recovery, Radio Bilingüe, Sacramento County Superior Court, Sacramento Public Library Authority (SPLA), Santa Barbara Superior Court, Santa Cruz County Animal Services Authority, Teton County Joint Housing Authority (TCJHA), Transitions-Mental Health Association, Valley Consortium for Medical Education (VCME), Water Forum, West Angeles Church of God in Christ.

Private Organizations: CDS Publications, Central California Truck and Trailer, Morton & Pitalo, NAVA, SWEED, Tekmanagement, Touchstone Accounting.

Consulting services (classification and compensation services, competency modeling, job description development, job family development, job analysis): City of Fremont (CA), City of Medford (OR), City of Santa Maria (CA), City of Santa Paula (CA), County of Humboldt (CA), County of Mariposa (CA), County of Santa Barbara (CA), and County of San Luis Obispo (CA).

II. BACKGROUND & QUALIFICATIONS.....

INDUSTRIES

- Organizational Leadership
- Economic Development
- Facilities & Operations
- Financial, Administrative Services, Accounting, Auditing
- Health & Human Services, Housing, Unhoused
- HR, Risk, Labor/Employee Relations
- Information Technology
- Legal, Counsel, Clerk
- Library
- Marketing, Communications, PR
- Parks & Rec, Community Services, Arts
- Planning, Environmental, Community Development, Building, Transit
- Public Safety
- Public Works, Transportation, Engineering

BELOW IS A LIST OF SIMILAR RECRUITMENTS WBCP HAS MANAGED:

PUBLIC WORKS, TRANSPORTATION, ENGINEERING

- Chief Operating Officer - Administrative and Contract Services, Valley Water, CA
- Chief Operating Officer - Water Utility Enterprise, Valley Water, CA
- Director of Electric Utility, City of Roseville, CA
- Director of Electric Utility, Truckee Donner Public Utility District (TPUD), CA
- Director of Engineering, City of Ceres, CA
- Director of Engineering, Monterey One Water, CA
- Director of Power Systems, Nevada Irrigation District, CA
- Director of Public Works & Transportation, City of Irvine, CA
- Director of Public Works, City of Ashland, OR
- Director of Public Works, City of Petaluma, CA
- Director of Public Works, City of Roseville, CA
- Director of Public Works, City of Sacramento, CA
- Director of Public Works, City of San Rafael, CA
- Director of Public Works, City of Santa Maria, CA
- Director of Public Works, City of Solvang, CA
- Director of Public Works, County of Nevada, CA
- Director of Public Works, County of Shasta, CA
- Director of Public Works, County of Yuba, CA
- Director of Public Works, County of San Diego, CA
- Director of Transportation, County of Riverside, CA
- Director of Utilities, City of Sacramento, CA
- Planning Director, San Bernardino County, CA
- Assistant Director of Land Use Services, San Bernardino County, CA
- Assistant Director of Public Works – Transportation, City of Davis, CA
- Assistant Director of Public Works, City of Santa Paula, CA
- Assistant Director of Public Works/City Engineer, City of San Rafael, CA
- Assistant Director Public Works, County of Marin, CA
- Assistant General Manager, Water operations, Modesto Irrigation District, CA
- Assistant Operating Officer of Watershed Stewardship & Planning Div., Valley Water, CA
- Assistant Operating Officer - Dam Safety and Capital Delivery, Valley Water, CA
- Assistant Operating Officer - Treated Water, Valley Water, CA
- Utilities Systems Superintendent, City of Calistoga, CA
- Deputy Director Public Works - Civil/Traffic Engineer, County of Marin, CA
- Deputy Director Public Works/Traffic Engineer, City of San Rafael, CA
- Deputy Operating Officer - Raw Water, Valley Water, CA
- Deputy Operating Officer - Water Utility Capital, Valley Water, CA
- Deputy Operating Officer - Watersheds Design and Construction, Valley Water, CA
- Deputy Operating Officer - Watersheds Operations and Maintenance, Valley Water, CA
- Deputy Public Works Directors: Engineering & Transportation and Operations & Zero Waste, City of Berkeley, CA
- Deputy PW Director/Principal Civil Engineer/Traffic Engineer, City of Santa Maria, CA
- Deputy Transportation Officer & Transportation and Mobility Planning Manager, City of Culver City, CA
- Operations and Maintenance Manager, Rogue Valley Sewer Services, OR
- Manager of Engineering (City Engineer), City of Berkeley, CA
- Public Works Manager – Utilities, City of Milpitas, CA

II. BACKGROUND & QUALIFICATIONS.....

PUBLIC WORKS, TRANSPORTATION, ENGINEERING (CON'T)

- Project Director, City of San Rafael, CA
- Transportation and Mobility Planning Manager, City of Culver City, CA
- Unit Manager - Asset Management, Valley Water, CA
- Unit Manager - Engineering Utility Operations and Maintenance Manager, Valley Water, CA
- Unit Manager - Treatment Plant Design & Commissioning Manager, Valley Water, CA
- Engineering/CIP Manager, City of Petaluma, CA
- Industrial / Mechanical Senior Engineer, SWEED, OR
- Town Engineer, Town of Portola Valley, CA
- District Engineer, San Benito County Water District, CA
- Civil Engineer, Project Manager & Assistant Project Manager, Morton and Pitalo, CA
- Civil Engineering Manager – Structures & Capital Group, County of Santa Barbara, CA
- Civil Engineer, County of Tehama, CA
- City Engineer, City of Milpitas, CA
- City Engineer/Deputy Director of Community Development, City of Rocklin, CA
- Civil Engineers - Development Services, Santa Clarity Valley Water Agency, CA
- Senior Civil Engineer and Civil Engineer, County of Marin, CA
- Senior Civil Engineer & Civil Engineer, County of Marin, CA
- Senior Civil Engineer or Associate Civil Engineer, City of San Rafael, CA
- Senior Professional Engineer – Plant Operations Division, City of Fort Worth, TX
- Senior Engineer Dam Safety, Nevada Irrigation District, CA
- Senior Civil Engineer, City of Petaluma, CA
- Senior Civil Engineer, City of San Rafael, CA
- Principal Civil Engineer, City of Santa Maria, CA
- Principal Engineer & Engineering Series, San Rafael Sanitation District, CA
- Principal Engineer, Sacramento Area Flood Control Agency (SAFCA), CA
- Senior Engineer, Water Utilities Division, City of Roseville, CA
- Senior Engineer, Water Utilities Division, County of Santa Barbara, CA
- Senior Engineer – Dam Safety, Nevada Irrigation District, CA
- Senior Engineer, City of Roseville, CA
- Senior Engineer - Environmental/Water Utilities, City of Roseville, CA
- Senior Engineer, Town of Corte Madera, CA
- Senior Engineer, County of Tehama, CA
- Principal Engineer, Sacramento Area Flood Control Agency (SAFCA), CA
- Traffic Engineer, City of Pasadena, CA
- Project Engineer/Power Engineer, City of Palo Alto, CA
- Engineering Series (3 Positions), City of Los Altos, CA
- Senior Environmental Planner, Valley Water, CA
- Senior Professional Engineer – Plant Operations Division, City of Fort Worth, TX
- District Engineer, San Benito County Water District, CA
- Engineering Manager – Plant Operations Division, City of Fort Worth, TX
- Street Maintenance Superintendent, City of Roseville, CA
- Structures and Capital Group Manager, County of Santa Barbara, CA
- Electric Linesperson/Cable Splicer (High Voltage Lineman), City of Palo Alto, CA
- Electric Operations Manager, City of Palo Alto, CA
- Electric Project Engineer, City of Palo Alto, CA
- Assistant Engineer & Junior Engineer, City of San Rafael, CA
- Multiple Civil Engineering & Project Management Positions, City of Petaluma, CA
- Power Engineering Manager, City of Roseville, CA
- General Manager, San Benito County Water District, CA

Check out our full list of recruitments here: https://tinyurl.com/3j9bdd79

II. BACKGROUND & QUALIFICATIONS.....

RECRUITING WITH DIVERSITY IN MIND

Since partnering with the country's largest network of diversity job boards, ***we have seen a 21% increase in diverse applicants and a 13% increase*** *in diverse candidates placed in positions with our clients. This demonstrates WBCP's dedication to expanding outreach and removing barriers to apply, ensuring access to a highly qualified and diverse applicant pool.*

600 Diversity Job Boards:

When you post a job with WBCP, it is automatically shared across 600 diversity job boards, maximizing reach and ensuring access to a wide and inclusive pool of talent. We also utilize the largest diversity database with over 160 million resumes and 15,000 community based organization contacts to expand our search.

LinkedIn:

As LinkedIn recruiters, we have access to over 1 Billion profiles, allowing us to evaluate candidates' backgrounds, education, experience, licensure, and more.

AI:

WBCP also leverages AI tools to gather additional information to effectively reach future applicants and candidates contact information for emails and phone numbers.

WBCP understands the complexities of meeting the needs of a diverse community, and we provide a thorough, complete, and fair recruitment process.

WBCP

Streamline and Satisfy the RFP Process to receive recruiting on demand. Reach out to WBCP today for more information.

PUBLIC PROMISE PROCUREMENT Powered by NACo

COUNTY OF SAN DIEGO

Scan to learn more!

II. BACKGROUND & QUALIFICATIONS.....

WHY CHOOSE WBCP

Proven Expertise:

- **Over 20 Years in Business and 100+ Years of Experience:** With over a century of combined experience, our recruitment professionals excel in public service sectors, including cities, counties, utilities, special districts, joint powers authorities, and non-profits. Our proven track record ensures expertise tailored to your needs.

- **100% Success Rate:** In 2024, we achieved a 100% success rate, successfully filling every position we managed including partial and full scope services from engineering, planning, finance, health and human services, legal, legislative, hard-to-fill civil service positions, and many more! We deliver results no matter what the challenge.

Employer Recognition: WBCP has been recognized as Oregon's TOP 100 EMPLOYERS.

HR Teams Trust Us: We simplify the recruitment process, managing every detail so HR teams can focus on other priorities. From sourcing candidates to scheduling interviews and providing updates, our seamless approach saves time, reduces stress, and ensures results.

Strategic Marketing and Advertising: Our marketing team designs targeted campaigns using diverse, cost-effective channels powered by AI. These campaigns maximize reach while staying within budget and include:

- Diverse Applicant Pools: Access to over 600 diversity-focused job boards, 15,000 diversity affiliations, and 120 million resumes ensures diversity is integral to our process.
- LinkedIn Recruiter Expertise: With access to 230 million U.S. profiles, we connect you with top-tier talent.
- AI-Driven Talent Acquisition: Advanced AI strategies enhance efficiency and uncover new candidate engagement opportunities.

Trusted Partners and Culture Cultivators: We go beyond finding candidates by building trust with your team and stakeholders. Our tailored strategies align top talent with your organizational culture, ensuring a collaborative and thoughtful recruitment process.

Recruiting with Competencies: Ensures a fair, measurable, and effective hiring process. This strategic approach helps identify the client's needs and then assesses candidates on the critical skills and behaviors for success.

Benefits:

- Fairness: Focuses on role-specific competencies.
- Measurability: Provides objective evaluation criteria.
- Better Matches: Aligns talent with organizational and cultural needs.
- Equitable: Reduces bias with standardized assessments.

Recruiting with competencies delivers high-quality, measurable solutions that ensure the best candidates for your team's success and cultural alignment.

Timely and effective background and Reference Checks: WBCP partners with a trusted third party for thorough background checks and relies on a 30-year public safety veteran, retired as a police chief, and an expert in employee investigations, to conduct expert reference verifications. This ensures accuracy, professionalism, and confidence in every hiring decision.

III. BACKGROUND & QUALIFICATIONS

EXECUTIVE LEADERSHIP

WENDI BROWN
President/Sr. Recruiter

RICHARD KUHNS, Psy.D
Vice President of Recruitment & Culture

HEATHER JACK
Director of Finance & Operations

MANAGEMENT/RECRUITERS

JOSETTE REINA-LUKEN
Executive Recruiter

TERI MAUS-NISICH
Sr. Executive Recruiter

LEVI KUHLMAN
Executive Recruiter

LAUREN GERSON
Executive Recruiter

DD GRISSOM
Talent Acquisition Manager

MAGGIE ALEXANDRE
Executive Search Associate

STEPHANIE LAWSON
Recruitment Manager

KARLEE BECKSTEAD
Marketing & Communications Manager

ADMINISTRATIVE PROFESSIONALS

LEAH MURPHY
Project Manager

NAOMI ORR
Project Manager

LANE NOLAN
Project Manager

SHANI PEARCE
Project Manager

ANGELA EDWARDS
Talent Acquisition Specialist

SOFIA QURAISHI
Talent Acquisition Specialist

ALEX LE
Copywriter

RYAN BROWN
IT Technician II

MADDY SCHWARZ
Marketing & Events Coordinator

JAMI GILMAN
Marketing Assistant

AIMEE KUHLMAN
Operations Assistant

KATIE GARROTTO
Recruitment Assistant

JAYCE HERBOLD
Recruitment Assistant

CREATIVE PARTNERS / SENIOR ADVISORS

BRUCE GRIFFITHS
Organizational Development/ IO Psychologist

STEVE BROWN
National Account Manager

BILL LANDIS
Public Safety Investigator

ALAN ROSEN
Executive Recruiter/ Sr. Facilitator

BERNIE LICATA
Organizational Development Consultant

SCOTT BECKSTEAD, JD
Sr. Advisor

MIKE LUKEN
Sr. Facilitator

WILLIAM RACOWSCHI
Fire/Public Safety

CHRISTY WURSTER
Sr. Facilitator

RIVKAH SASS
Retired Library Director/Sr. Facilitator

WBCP STATISTICS

WBCP is a 100% woman-owned business. Staff and consultants are a diverse mix of gender/ethnicity
Age ranges from 24 - 70+



IV. WBCP KEY STAFF

WENDI BROWN
Lead Consultant/ Sr. Executive Recruiter



I am the President of WBCP, with over 20 years of experience in marketing and advertising and combine this with my background in recruiting to successfully place hard-to-fill, management, and executive positions. My team and I are passionate about helping organizations improve their recruitment services, place great talent, conduct department assessments, redesign antiquated processes, revise job descriptions, conduct salary and benchmark studies, and more. I have worked in various industries – advertising and public relations, national real estate franchisor, global manufacturing – and I have worked with nonprofit and public sector organizations since 1999. Formerly, I was an internal Human Resources Consultant for the County of Orange, California, providing countywide communications, human resources, executive search, and recruiter training services to the Assistant Chief Executive Office/Human Resources Director and, at that time, 25 decentralized departments, with 17,000 employees, serving a community of 300,000. I have a Bachelor's of Science in Business Administration with an emphasis in Marketing from Colorado Technical University; have earned several certificates in Project Management, Global Business, Marketing, and Human Resources; and working toward a Master's in Management at Southern Oregon University

RICHARD KUHNS
Vice President of Recruiting & Culture



Richard Kuhns is a retired County Administrative Officer with over 28 years of experience in the Public Sector. He is currently the VP of Recruiting and Organizational Culture for WBPC. Richard began his career in Law Enforcement, transferring his focus to Administration where he served as the Director of Housing and Community Action, Behavioral Health, General Services, and Solid Waste. Richard has a "find a way, to find a way" mentality. With his vast knowledge and experience in the Public Sector he has an intuitive understanding of working with government leaders, policy makers, and the public. Richard achieved a Bachelor of Science in Business Management, a Master of Arts in Behavioral Science with an emphasis in Conflict Resolution and Negotiations, and a Doctorate in Clinical Psychology. For the past three years Richard has worked as an Executive Recruiter and Behavioral Health Consultant. As a Consultant, he worked with several Northern California Counties creating and implementing the newly state mandated 24/7 Mobile Crisis. He has now focused his time and efforts on assisting WBCP clients in finding and securing the top candidate for your organization.

IV. WBCP KEY STAFF

TERRI MAUS-NISICH
Sr. Executive Recruiter



Terri Maus-Nisich holds a pivotal role as one of our Senior Executive Recruiters, leveraging her extensive background as a distinguished leader in local government. With a local government career spanning over 40 years, Terri's journey includes transformative roles within the County of Santa Barbara, where she ascended from Parks Director to Assistant County Executive Officer, overseeing vital municipal and health/human service departments. Her remarkable impact encompasses leadership in Homeless Services, Communications, and Emergency Management, driving community engagement, disaster recovery, and support for vulnerable populations. Before her tenure in Santa Barbara, Terri spent 15 years with the City of Santa Clarita in roles ranging from analyst to Deputy City Manager. Throughout her remarkable career, Terri prioritized strategic planning, organizational development, and innovative problem-solving, garnering numerous awards. She holds a Bachelor's Degree from UC Santa Barbara, a Masters of Public Administration from Cal State Northridge, and a graduate certificate from Harvard University's JFK School of Government.

LAUREN GERSON
Executive Recruiter



Lauren Gerson is a seasoned Executive Recruiter at WBCP, where she draws on over 15 years of experience in career services, customer relations, and operations. Her recruiting expertise extends across various industries, with notable success in health and human services, utilities, and finance. Lauren has helped organizations across multiple states fill hard-to-hire positions at every level, from individual contributors to executives. Lauren's diverse professional journey began in operations and events management, where she honed her expertise in human resources, business management, and regulatory compliance. She later transitioned to career services, and prior to joining WBCP, worked with a career coaching company helping job-seekers better leverage their skills and overcome barriers to employment. Lauren holds a Bachelor's degree in Philosophy from Whittier College. She brings a unique perspective to her role, and is committed to making a positive impact both professionally and personally. With her unwavering dedication and client-centric focus, Lauren continues to drive success and excellence in executive recruitment at WBCP.

IV. WBCP KEY STAFF

LEVI KUHLMAN
Executive Recruiter



Levi Kuhlman is an Executive Recruiter at WBCP, and an experienced professional with a multifaceted career spanning across executive recruitment, real estate, and entrepreneurship. He has worked extensively with local municipalities, special districts, and not-for-profit organizations across the Western region, with a focus in California, Oregon, and Idaho. Levi has conducted many successful recruitments in various industries including planning, rent stabilization and housing, engineering, finance, city management, transportation and transit, community development, building and safety, public safety, risk management, and information technology. Levi serves as a skilled and diplomatic liaison, earning a reputation for his personalized approach to recruiting. Before joining the ranks of WBCP, he advocated on behalf of tenants, landlord, and clients. With a diverse skill set and a commitment to excellence, Levi continues to make significant contributions to WBCP, his clients, and broadening the professional community one recruitment at a time.

REVIEW OTHER EMPLOYEES & CONSULTANT PARTNERS ON OUR WEBSITE: WWW.WBCPINC.COM/WBCP-TEAM

V. RECRUITMENT STRATEGY / PHASES.....

WBCP knows how to customize your search strategy to meet your unique recruitment needs. We customize your recruitment based on the specific needs, target audience, and challenges for each recruitment; however, below is a baseline approach for most recruitments.

CLIENT & STAKEHOLDER MEETINGS

We require the Client and/or Search Committee, and other stakeholders identified by the Client, be involved in the initial and final phases of this recruitment. These are critical phases to ensure we obtain a clear sense of the priorities and the successful hire of the right candidate. WBCP will meet with various stakeholders as warranted by the Client and the level of the position in the organization. These meetings will allow us an opportunity to gather information and gain knowledge about the organization, community, and unique aspects of the recruitment to design the ideal candidate professional profile, advertising materials, and strategic approach

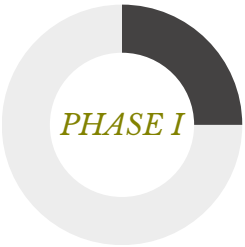

FEEDBACK OUTCOME / TIMELINE DEVELOPMENT

Following the Client/stakeholder meetings, we will develop a detailed timeline for the recruitment along with a proposed advertising plan for approval.

CREATIVE DEVELOPMENT

Immediately following the client feedback activities, we will draft the competencies for the recruitment and advertising material/recruitment brochure for the Client's review. This information will summarize what was learned from Client-related interviews and will be used to advertise the opening.

MARKETING STRATEGY & IMPLEMENTATION

WBCP will execute a customized marketing/ad plan once the job announcement is created. An ad plan could include the following (based on assumptions), and will be customized based on information gathered in Phase I:

DIGITAL ADVERTISING WITH DIVERSITY IN MIND

WBCP utilizes digital advertising to obtain diverse applicant pools, leveraging local and national job boards, associations, and social media. In partnership with a diversity platform, our postings reach up to 600 local employment and diversity websites, connecting across 15,000+ community organizations and niche sites, tapping into a job bank of 2 million resumes. Upon our 2024 year-end review, we found that over the last three years 63% of our placed candidates came from diverse backgrounds.



EMAIL & DIRECT MAIL ADVERTISING

In addition to tapping into WBCP's existing pool of potential applicants, we have the capability to access various professional lists. We actively seek out additional lists through associations, contacts, and other strategic channels.

SOURCING/HEADHUNTING

WBCP employs a proactive approach by reaching out to targeted individuals and cultivating new connections through referrals from reputable sources. As a LinkedIn recruiter, we harness the power of over 350 million profiles to identify and engage with ideal candidates. Additionally, WBCP utilizes cutting-edge AI tools for precise Boolean searches, enabling us to uncover niche candidates effectively.

COMMUNICATION WITH CLIENT

We will provide weekly updates on the progress of this search unless the client prefers more or less frequent communications. We tailor our communications in accordance with our Client's needs.

VI. SCOPE OF WORK

- Facilitate initial kick-off meeting with Client and other meetings that may include Executive Leadership, staff, community, and other stakeholders to assist with identifying the ideal candidate profile.
- Assist Client hiring authority/stakeholders in modifying the job description (as needed), and develop a recruitment announcement, marketing materials, and advertising plan for the recruitment.
- Attend all other meetings and engagements as needed or identified by the Client.
- Implement advertising plan including: publication, sourcing/headhunting, direct mail, and other online and email marketing efforts.
- Provide timely updates and progress reports to the client regarding search services; every two weeks or as Client identifies is needed.



VII. RECRUITMENT TIMELINE

BELOW IS A SAMPLE OF AN EXECUTIVE SEARCH TIMELINE THAT WBCP WILL CUSTOMIZE FOR THIS RECRUITMENT

Week 1:

- Secure services with search firm, WBCP, Inc.
- WBCP: review search parameters and recruiting processes with Client
  - Interview with hiring authority and other stakeholders for competencies
  - Identification of advertising venues and ideal candidate prospects
  - Calls, meetings, or coordination with other stakeholders for information gathering

Weeks 1 + 2:

- Develop and approvals: recruitment process, deadlines, ad plan and strategy, recruitment timeline and brochure
- Print coordination (if applicable)

Weeks 2 + 3:

- **OPEN RECRUITMENT AND AD PLAN:** Implement marketing plan and direct mail (if applicable)
- Timeline may be extended if direct mail piece is included (i.e., print/postage)

Weeks 4, 5, + 6:

- Receive applications – WBCP may receive applications (if using our applicant tracking system) and/or receive updates from clients on the results of the recruitment.

Weeks 7 + 8:

- **CLOSE RECRUITMENT AND ADVERTISING**



VIII. REFERENCES

1-Monterey One Water, California

Positions Filled:

- Director of Engineering

Contact Information:

- Leara Sampson, Director of Employee Services - Leara@my1water.org | 831-645-4650

2-Sacramento Area Flood Control, California

Positions Filled:

- Principal Engineer
- Director of Engineering (active)

Contact Information:

- Jason Campbell, Deputy Executive Director - campbellja@saccounty.gov | 916-875-6119

3-City of Milpitas, California

Positions Filled:

- City Engineer

Contact Information:

- Kelli Parmley, Director of Human Resources - kparmley@milpitas.gov | 408-586-3086

IX. MARKETING MATERIAL EXAMPLES

Click below to see our marketing samples for similar positions. To see all of our brochures, visit: wbcpinc.com/closed-jobs-private/ and use the password: wbcp202510*

- Public Works Manager - Utilities, City of Milpitas, CA
- Assistant General Manager of Water Operations, Modesto Irrigation District, CA
- Utilities Systems Superintendent, City of Calistoga, CA
- Director of Utilities, City of Sacramento, CA
- Utilities Director, City of Solvang, CA
- Associate or Senior Engineer - Environmental (Sewer/Stormwater/Solid Waste, City of Los Altos, CA
- Principal Engineer & Engineering Series, San Rafael Sanitation District, CA
- Director of Engineering, Monterey One Water, CA
- Senior Engineer, Environmental/Water Utilities, City of Roseville, CA
- Senior Civil Engineer or Associate Civil Engineer, City of San Rafael, CA
- Electric Utility Director, Truckee Donner Public Utility District (TDPUD), CA
- Electric Utility Director, City of Roseville, CA
- Chief Operating Officer - Water Utility Enterprise, Valley Water, CA

X. COST SHEET / TIMELINE POLICY.....

WBCP will not limit the number of hours we work on a recruitment, rather we charge a flat rate and will spend the time necessary to ensure we are successful. Consulting fees will be billed once the position is open for applications and the advertising campaign has been launched.

SERVICE COST FOR 2 RECRUITMENTS

ENGINEERING ASSISTANT, ASSOCIATE CIVIL ENGINEER OR SENIOR CIVIL ENGINEER (2 VACANCIES)

Description of Services/Deliverables:	Inclusive Rate per Recruitment:
Consulting Services: Phases I-II in the proposal's recruitment strategy/phases section.	Position 1: $5,900 +Position 2: $5,900 =**$11,800 (flat rate)**
Expenses Include: Document shipping fees/delivery charges to facilitate virtual meetings; brochure/graphic design ($950); marketing and advertising which may include: print and postage (if applicable); online job boards; social media; sourcing; and may include flat fee pricing for: LinkedIn $395, InMails $300, Circa Diversity Job Boards $295, Zoom Info $299. These expenses will be billed based on what is expended and based on the needs of the client/recruitment.	Position 1: Up to $4,500 + Position 2: Up to $4,500 = **$9,000** -*$1,000 discount Up to $8,000 (direct expenses not-to-exceed)

*This discount is offered exclusively for a combined recruitment.

Cost and Timeline Policy

To ensure the success and efficiency of our recruitment services, the following policies regarding cost and timelines are in place:

1. **Timeline Development:** Timelines provided to our clients are valid for **10 business days**. If a timeline is not secured or confirmed within this period, it may no longer be available. In such cases, the timeline may be reassigned to another client, and a revised timeline will be provided.

These policies ensure clarity, fairness, and high-quality outcomes for all parties involved.

XI. OTHER

INSURANCE

WBCP and its sub-consultants have reviewed the contractual agreement and the Insurance Requirements. If selected, WBCP will execute said agreement and will provide the required insurance documents. WBCP will submit certificates of insurance as evidence of the required coverage limits. Insurance policies include: liability, errors and omissions, workers compensation, and vehicle insurance.

CONFIDENTIALITY SAFEGUARDS

Confidentiality is paramount in the work we do. We ensure that the client and candidate information we receive, and conversations with our client (and certainly discussions in closed session) are kept confidential. There are several physical safeguards we have in place including: locked and alarmed office space, password, and encryption protected information on our computers and servers, multiple backup systems. As information is shared with our client, we discuss the importance of confidentiality and why it is important to the candidates they are considering but also brands the organization appropriately. We also ask candidates who are interviewed to keep candidate information confidential, as they may see or meet a candidate during the process. We emphasize that confidentiality is not just until the recruitment is completed, and a candidate is hired, confidentiality is in perpetuity. Leaked information is not a reputation that a client wants to receive, as this could deter future applicants from applying.

ORGANIZATIONAL DIVERSITY STATEMENT

WBCP embraces cross-cultural diversity and we are committed to equitable treatment and elimination of discrimination in all its forms at all organizational levels and throughout all consulting practices, including search services. We strive to reach diverse groups of people to inform them of leadership opportunities. **Upon our 2024 year-end review, we found that over the last three years 63% of our placed candidates came from diverse backgrounds.** We will make extensive efforts to attract a qualified applicant pool that represents a broad range of gender and ethnically diverse individuals.

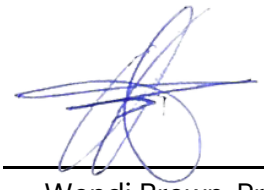

Wendi Brown, President — June 5, 2025

Date

Client, Title — Date

Docusign Envelope ID: AFD49F62-4631-454D-9936-DC35F8E7B940

Administering Agency:

Contract No. _____

Contract Description: **Recruitment Services for Public Affairs Manager**

PROFESSIONAL SERVICES CONTRACT

THIS PROFESSIONAL SERVICES CONTRACT ("Contract") is made at South Pasadena, California, as of April 21,2025, by and between the City of South Pasadena ("Client"), and WBCP Inc. ("Contractor") (together, "Parties", individual "Party"), who agree as follows:

1. **Services** Subject to the terms and conditions set forth in this Contract, Contractor shall provide the services described in Exhibit A. Contractor shall provide said services at the time, place, and in the manner specified in Exhibit A.

2. **Payment** Client shall pay Contractor for services rendered pursuant to this Contract at the time and in the amount set forth in Exhibit B. The payments specified in Exhibit B shall be the only payment made to Contractor for services rendered pursuant to this Contract. Contractor shall submit invoices in thirds after key milestones are conducted: after the recruitment advertising is live, after the shortlist, and after background and references are conducted.. **The amount of the contract shall not exceed $15,400.**

3. **Term** This Contract shall commence on April 21, 2025 All services required to be provided by this Contract shall be completed and ready for acceptance no later than the **Contract Termination Date** of: June 30, 2025.

4. **Facilities, Equipment and Other Materials** Contractor shall, at its sole cost and expense, furnish all facilities, equipment, and other materials which may be required for furnishing services pursuant to this Contract.

5. **Exhibits** All exhibits referred to herein and attached hereto are incorporated herein by this reference.

6. **Electronic Signatures** The Parties acknowledge and agree that this Contract may be executed by electronic signature, which shall be considered as an original signature for all purposes and shall have the same force and effect as an original signature. Without limitation, "electronic signature" shall include faxed or emailed versions of an original signature or electronically scanned and transmitted versions (e.g., via pdf) of an original signature.

7. **Time for Performance** Time is of the essence. Failure of Contractor to perform any services within the time limits set forth in Exhibit A, or elsewhere in this Contract, shall constitute material breach of this contract. Contractor shall devote such time to the performance of services pursuant to this Contract as may be reasonably necessary for the satisfactory performance of Contractor's obligations pursuant to this Contract. Neither Party shall be considered in default of this Contract to the extent performance is prevented or delayed by any cause, present or future, which is beyond the reasonable control of the Party.

8. **Liquidated Damages**

Liquidated Damages are presented as an estimate of an intangible loss to the Client. It is a provision that allows for the payment of a specified sum should Contractor be in breach of contract. Liquidated Damages ☐**shall apply** ☒**shall not apply** to this contract. Liquidated Damages applicable to this contract are incorporated in Exhibit E, attached hereto.

9. **Relationship of Parties**

A. **Independent Contractor**

In providing services herein, Contractor, and the agents and employees thereof, shall work in an independent capacity and as an independent contractor and not as agents or employees of Client. Contractor acknowledges that it customarily engages independently in the trade, occupation, or business as that involved in the work required herein. Further, the Parties agree that Contractor shall perform the work required herein free from the control and direction of Client, and that the nature of the work is outside the usual course of Client's business. In performing the work required herein, Contractor shall not be entitled to any employment benefits, Workers' Compensation, or other programs afforded to Client employees. Contractor shall hold Client harmless and indemnify Client against such claim by its agents or employees. Client makes no representation as to the effect of this independent contractor relationship on Contractor's previously earned California Public Employees Retirement System ("CalPERS") retirement benefits, if any, and Contractor specifically assumes the responsibility for making such determination. Contractor shall be responsible for all reports and obligations including but not limited to: social security taxes, income tax withholding, unemployment insurance, disability insurance, workers' compensation and other applicable federal and state taxes.

B. **No Agent Authority** Contractor shall have no power to incur any debt, obligation, or liability on behalf of Client or otherwise to act on behalf of Client as an agent. Neither Client nor any of its agents shall have control over the conduct of Contractor or any of Contractor's employees, except as set forth in this Contract. Contractor shall not represent that it is, or that any of its agents or employees are, in any manner employees of Client.

C. **Indemnification of CalPERS Determination** In the event that Contractor or any employee, agent, or subcontractor of Contractor providing service under this Contract is determined by a court of competent jurisdiction or CalPERS to be eligible for enrollment in CalPERS as an employee of Client, Contractor shall indemnify, defend, and hold harmless Client for all payments on behalf of Contractor or its employees, agents, or subcontractors, as well as for the payment of any penalties and interest on such contributions, which would otherwise be the responsibility of Client.

10. **Assignment and Subcontracting** Except as specifically provided herein, the rights, responsibilities, duties and services to be performed under this Contract are personal to Contractor and may not be transferred, subcontracted, or assigned without the prior written consent of Client. Contractor shall not substitute or replace any personnel for those specifically named herein or in its proposal without the prior written consent of Client.

Contractor shall cause and require each transferee, subcontractor, and assignee to comply with the insurance provisions set forth herein, to the extent such insurance provisions are required of Contractor under this Contract. Failure of Contractor to so cause and require such compliance by each transferee, subcontractor, and assignee shall constitute a material breach of this Contract, and, in addition to any other remedy available at law or otherwise, shall serve as a basis upon which Client may elect to suspend payments hereunder, or terminate this Contract, or both.

Docusign Envelope ID: AFD49F62-4631-454D-9936-DC35F8E7B940

11. **Licenses, Permits, Etc.** Contractor represents and warrants to Client that Contractor shall, at its sole cost and expense, obtain or keep in effect at all times during the term of this Contract, any licenses, permits, and approvals which are legally required for Contractor to practice its profession at the time the services are performed.

12. **Mutual Indemnification**

Each party (the "Indemnifying Party") agrees to indemnify, defend, and hold harmless the other party, its officers, agents, employees, and assigns (collectively, the "Indemnified Party") from and against any and all claims, demands, liabilities, judgments, awards, losses, damages, costs, expenses (including reasonable attorneys' fees and court costs), or other claims (collectively, "Claims") arising out of or resulting from:

For Contractor: WBCP's performance of recruitment services under this Agreement, but only to the extent such Claims are caused by the negligence, willful misconduct, or breach of contractual obligations by WBCP or its employees, agents, or subcontractors.

For the Client: The Client's actions, omissions, or decisions under this Agreement, but only to the extent such Claims are caused by the negligence, willful misconduct, or breach of contractual obligations by the Client or its employees, officers, agents, or representatives.

In the event of concurrent negligence or fault of both parties, the Indemnifying Party's obligation shall be limited to its proportionate share of fault as determined by a court of competent jurisdiction or mutually agreed upon by the parties.

Intellectual Property Claims. Contractor shall also indemnify the Client for any claims that work performed under this Agreement infringes upon any third-party intellectual property rights. If such work is found to infringe, Contractor shall, at its own expense, (i) procure the right for the Client to use the work, or (ii) replace it with a noninfringing equivalent, satisfactory to the Client.

Control of Defense. Each party shall have the right to participate in or assume the defense of any claim at its own expense. The Indemnifying Party shall not settle any claim without the prior written consent of the Indemnified Party, which shall not be unreasonably withheld.

1. **Standard of Performance** Contractor shall perform all services required pursuant to this Contract in the manner and according to the standards observed by a competent practitioner of the profession in which Contractor is engaged in the geographical area in which Contractor practices its profession. All products of whatsoever nature which Contractor delivers to Client pursuant to this Contract shall be prepared in a substantial first class and workmanlike manner and conform to the standards or quality normally observed by a person practicing in Contractor's profession.

2. **Prevailing Wage and Apprentices** To the extent made applicable by law, performance of this Contract shall be in conformity with the provisions of California Labor Code, Division 2, Part 7, Chapter 1, commencing with section 1720 relating to prevailing wages which must be paid to workers employed on a public work as defined in Labor Code section 1720, et seq., and shall be in conformity with Title 8 of the California Code of Regulations section 200 et seq., relating to apprenticeship. Where applicable:
    - Contractor shall comply with the provisions thereof at the commencement of services to be provided herein, and thereafter during the term of this Contract. A breach of the requirements of this section shall be deemed a material breach of this contract. Applicable

Docusign Envelope ID: AFD49F62-4631-454D-9936-DC35F8E7B940

prevailing wage determinations are available on the California Department of Industrial Relations website at http://www.dir.ca.gov/OPRL/PWD.

- Contractor and all subcontractors must comply with the requirements of Labor Code section 1771.1(a) pertaining to registration of contractors pursuant to section 1725.5. Registration and all related requirements of those sections must be maintained throughout the performance of the Contract.
- Contracts to which prevailing wage requirements apply are subject to compliance monitoring and enforcement by the Department of Industrial Relations. Contractor and each subcontractor must furnish certified payroll records to the Labor Commissioner at least monthly.
- Client is required to provide notice to the Department of Industrial Relations of any public work contract subject to prevailing wages within five (5) days of award.

3. **Accessibility** It is the policy of Client that all Client services, programs, meetings, activities and facilities shall be accessible to all persons, and shall comply with the provisions of the Americans With Disabilities Act and Title 24, California Code of Regulations. To the extent this Contract shall call for Contractor to provide Client contracted services directly to the public, Contractor shall certify that said direct services are and shall be accessible to all persons.

4. **Nondiscriminatory Employment** Contractor shall not discriminate in its employment practices because of race, religious creed, color, national origin, ancestry, physical handicap, medical condition, marital status, sex or sexual orientation, or any other legally protected category, in contravention of the California Fair Employment and Housing Act, Government Code section 12900 et seq.

5. **Drug-Free Workplace** Senate Bill 1120, (Chapter 1170, Statutes of 1990), requires recipients of State grants to maintain a "drug-free workplace". Every person or organization awarded a contract for the procurement of any property or services shall certify as required under Government Code Section 8355-8357 that it will provide a drug-free workplace.

6. **Political Activities** Contractor shall in no instance expend funds or use resources derived from this Contract on any political activities.

7. **Financial, Statistical and Contract-Related Records:**

A. **Books and Records** Contractor shall maintain statistical records and submit reports as required by Client. Contractor shall also maintain accounting and administrative books and records, program procedures and documentation relating to licensure and accreditation as they pertain to this Contract. All such financial, statistical and contract- related records shall be retained for five (5) years or until program review findings and/or audit findings are resolved, whichever is later. Such records shall include but not be limited to bids and all supporting documents, original entry books, canceled checks, receipts, invoices, payroll records, including subsistence, travel and field expenses, together with a general ledger itemizing all debits and credits.

B. **Inspection** Upon reasonable advance notice and during normal business hours or at such other times as may be agreed upon, Contractor shall make all of its books and records, including general business records, available for inspection, examination or copying, to Client, or to the State Department of Health Care Services, the Federal Department of Health and Human Services, the Controller General of the United States and to all other authorized federal and state agencies, or their duly authorized representatives.

Docusign Envelope ID: AFD49F62-4631-454D-9936-DC35F8E7B940

C. **Audit** Contractor shall permit the aforesaid agencies or their duly authorized representatives to audit all books, accounts or records relating to this Contract, and all books, accounts or records of any business entities controlled by Contractor who participated in this Contract in any way. All such records shall be available for inspection by auditors designated by County or State, at reasonable times during normal business hours. Any audit may be conducted on Contractor's premises or, at Client's option, Contractor shall provide all books and records within fifteen (15) days upon delivery of written notice from Client. Contractor shall promptly refund any moneys erroneously charged..

8. **Termination**

A. A material breach, as defined pursuant to the terms of this Contract or otherwise, in addition to any other remedy available at law or otherwise, shall serve as a basis upon which Client may elect to immediately suspend payments hereunder, or terminate this Contract, or both, without notice.

B. If Contractor fails to timely provide in any manner the services materials and products required under this Contract, or otherwise fails to promptly comply with the terms of this Contract, or violates any ordinance, regulation or other law which applies to its performance herein, Client may terminate this Contract by giving **five (5) calendar days written notice to Contractor.**

C. Either Party may terminate this Contract for any reason, or without cause, by giving **thirty (30) calendar days written notice** to the other, which notice shall be sent by registered mail in conformity with the notice provisions, below. In the event of termination not the fault of Contractor, Contractor shall be paid for services performed to the date of termination in accordance with the terms of this Contract. Contractor shall be excused for failure to perform services herein if such performance is prevented by acts of God, strikes, labor disputes or other forces over which Contractor has no control.

D. Client, upon giving **thirty (30) calendar days written notice** to Contractor, shall have the right to terminate its obligations under this Contract at the end of any fiscal year if Client or the State of California, as the case may be, does not appropriate funds sufficient to discharge Client's obligations coming due under this contract.

In the event this Contract is terminated:

A. Contractor shall deliver copies of all writings prepared by it pursuant to this Contract. The term "writings" shall be construed to mean and include: handwriting, typewriting, printing, photostatting, photographing, and every other means of recording upon any tangible thing any form of communication or representation, including letters, words, pictures, sounds, or symbols, or combinations thereof.

B. Client shall have full ownership and control of all such writings delivered by Contractor pursuant to this Contract.

C. Client shall pay Contractor the reasonable value of services rendered by Contractor to the date of termination pursuant to this Contract not to exceed the amount documented by Contractor and approved by Client as work accomplished to date; provided, however, that in no event shall any payment hereunder exceed the amount of the Contract specified in Exhibit B, and further provided, however, Client shall not in any manner be liable for lost profits which might have been made by Contractor had Contractor completed the services required by this Contract. In this regard, Contractor shall furnish to Client such financial information as in the judgment of Client is necessary to determine the reasonable value of the services rendered by Contractor. The foregoing is cumulative and does not affect any right or remedy, which Client may have in law or equity.

Intellectual Property Contractor will not publish or transfer any materials produced or resulting from activities supported by this Contract without the express written consent of Client. All reports, original drawings, graphics, plans, studies and other data and documents, in whatever form or format, assembled or prepared by Contactor or Contractor's subcontractors, consultants, and other agents in connection with this Contract are "works made for hire" (as defined in the Copyright Act, 17 U.S.C. Section 101 et seq., as amended) for Client, and Contractor unconditionally and irrevocably transfers and assigns to Client all right, title, and interest, including all copyrights and other intellectual property rights, in or to the 'works made for hire." Unless required by law, Contractor shall not publish, transfer, discuss, or disclose any of the above-described works made for hire or any information gathered, discovered, or generated in any way through this Contract, without Client's prior express written consent. To the extent Client provides any of its own original photographs, diagrams, plans, documents, information, reports, computer code and all recordable media together with all copyright interests thereto, to Contractor during this Contract, such information shall remain the property of Client, and upon fifteen (15) days demand therefor, shall be promptly delivered to Client without exception.

9. **Waiver** One or more waivers by one Party of any major or minor breach or default of any provision, term, condition, or covenant of this Contract shall not operate as a waiver of any subsequent breach or default by the other Party.

10. **Conflict of Interest** Contractor certifies that no official or employee of Client, nor any business entity in which an official of Client has an interest, has been employed or retained to solicit or aid in the procuring of this Contract. In addition, Contractor agrees that no such person will be employed in the performance of this Contract unless first agreed to in writing by Client. This includes prior Client employment in accordance with Clients's Personnel Code.

11. **Entirety of Contract** This Contract contains the entire Contract of Client and Contractor with respect to the subject matter hereof, and no other contract, statement, or promise made by any Party, or to any employee, officer or agent of any Party, which is not contained in this Contract, shall be binding or valid.

12. **Alteration** No waiver, alteration, modification, or termination of this Contract shall be valid unless made in writing and signed by all Parties, except as expressly provided in Section 20, Termination.

13. **Governing Law and Venue** This Contract is executed and intended to be performed in the State of California, and the laws of that State shall govern its interpretation and effect. The venue for any legal proceedings regarding this Contract shall be the City of South Pasadena, State of California. Each Party waives any federal court removal and/or original jurisdiction rights it may have.

14. **Compliance with Applicable Laws** Contractor and any subcontractors shall comply with any and all federal, state and local laws, codes, ordinances, rules and regulations which relate to, concern of affect the services or type of services to be provided by this Contract.

15. **Additional Contractor Responsibilities**
    A. To the extent Contractor is a mandated reporter of suspected child and/or dependent adult abuse and neglect, it shall ensure that its employees, agents, volunteers, subcontractors, and independent contractors are made aware of, understand, and comply with all reporting requirements. Contractor shall immediately notify Client of any incident or condition resulting in injury, harm, or risk of harm to any child or dependent adult served under this Contract.
    B. Contractor will immediately notify Client of any active complaints, lawsuits, licensing or regulatory investigations, reports of fraud or malfeasance, or criminal investigations regarding

Docusign Envelope ID: AFD49F62-4631-454D-9936-DC35F8E7B940

its operations. Contractor agrees to work cooperatively with Client in response to any investigation commenced by Client with regard to this Contract or the clients served herein, including providing any/all records requested by Client related thereto.

C. Contractor shall employ reasonable background check procedures on all employees, prospective employees, volunteers and consultants performing work involving direct contact with minor children or dependent adults under this Contract, including fingerprinting and criminal records checks, sexual offender registry checks, and reference checks, including both personal and professional references.

16. **Confidentiality** Contractor, its employees, agents and or subcontractors may come in contact with documents that contain information regarding matters that must be kept confidential by Client, including personally identifiable patient or client information. Even information that might not be considered confidential for the usual reasons of protecting non-public records should be considered by Contractor to be confidential.

Contractor agrees to maintain confidentiality of information and records as required by applicable federal, state, and local laws, regulations and rules and recognized standards of professional practice.

Notwithstanding any other provision of this Contract, Contractor agrees to protect the confidentiality of any confidential information with which Contractor may come into contact in the process of performing its contracted services. This information includes but is not limited to all written, oral, visual and printed patient or client information, including but not limited to: names, addresses, social security numbers, date of birth, driver's license number, case numbers, services provided, social and economic conditions or circumstances, agency evaluation of personal information, and medical data.

Contractor shall not retain, copy, use, or disclose this information in any manner for any purpose that is not specifically permitted by this Contract. Violation of the confidentiality of patient or client information may, at the option of Client, be considered a material breach of this Contract.

17. **Notification** Any notice or demand desired or required to be given hereunder shall be in writing and deemed given when personally delivered or deposited in the mail, postage prepaid, and addressed to the Parties as follows:

Name: Todd Hileman
Address: 1414 Mission Street
City, St, Zip: South Pasadena, CA 91030
Email: Thileman@southpasadenaca.gov
Phone: 626-403-7210

WBCP, Inc
213 E Main St
Rogue River, OR 97537
wendi@wbcpinc.com
541-664-0376

Any notice so delivered personally shall be deemed to be received on the date of delivery, and any notice mailed shall be deemed to be received five (5) days after the date on which it was mailed.

Authority: All individuals executing this Contract on behalf of Contractor represent and warrant that they are authorized to execute and deliver this Contract on behalf of Contractor.

IN WITNESS WHEREOF, the Parties have executed this Contract to begin on the Effective Date.

City of South Pasadena:

By: Signed by: Todd Hileman _____ Date: 4/25/2025

Name: Todd Hileman
Title: City Manager

CONTRACTOR: WBCP Inc.

By: _____ Date:4/22/2025_____

Name: Wendi Brown_____

Title: President_____

Exhibits

A. Schedule of Services
B. Schedule of Charges and Payments
C. Insurance Requirements

Docusign Envelope ID: AFD49F62-4631-454D-9936-DC35F8E7B940

EXHIBIT A

SCHEDULE OF SERVICES

Included as a separate attachment: WBCP Proposal Option 1.5 Services

Docusign Envelope ID: AFD49F62-4631-454D-9936-DC35F8E7B940

EXHIBIT B

SCHEDULE OF CHARGES AND PAYMENTS

Included as a separate attachment WBCP Proposal Option 1.5 Services

Docusign Envelope ID: AFD49F62-4631-454D-9936-DC35F8E7B940

EXHIBIT C

INSURANCE REQUIREMENTS

Insurance. Contractor shall procure and maintain for the duration of the contract insurance against claims for injuries to persons or damages to property which may arise from or in connection with the performance of the work hereunder by Contractor, its agents, representatives, or employees. Coverage shall be at least as broad as:

1. **Commercial General Liability CGL:** Insurance Services Office Form CG 00 01 covering CGL on an "occurrence" basis, including products and completed operations, property damage, bodily injury and personal & advertising injury with limits no less than **$2,000,000** per occurrence. If a general aggregate limit applies, either the general aggregate limit shall apply separately to this project/location (ISO CG 25 03 or 25 04) or the general aggregate limit shall be twice the required occurrence limit.
2. **Automobile Liability:** Insurance Services Office Form Number CA 0001 covering, Code 1 (any auto), or if Contractor has no owned autos, Code 8 (hired) and 9 (non-owned), with limit no less than **$1,000,000** per accident for bodily injury and property damage. The Automobile Liability policy shall be endorsed to include Transportation Pollution Liability insurance MCS-90, covering materials to be transported by Contractor pursuant to the contract.
3. **Workers' Compensation:** Insurance as required by the State of California, with Statutory Limits, and Employer's Liability Insurance with limit of no less than **$1,000,000** per accident for bodily injury or disease.

4. If Contractor maintains broader coverage and/or higher limits than the minimums shown above, Client requires and shall be entitled to the broader coverage and/or the higher limits maintained by Contractor. Any available insurance proceeds in excess of the specified minimum limits of insurance and coverage shall be available to Client.

City Council Agenda Report

ITEM NO. 23

DATE: June 18, 2025

FROM: Todd Hileman, City Manager

PREPARED BY: Dean Flores, Acting Planning Manager

SUBJECT: **CONSIDERATION OF ADOPTION OF A RESOLUTION TO ESTABLISH NEW PLANNING APPLICATION FEES AND MODIFICATIONS TO EXISTING PLANNING FEES AS SET FORTH IN THE CITY'S MASTER FEE SCHEDULE RELATED TO DESIGN REVIEW AND OTHER FEES RELATED TO DEVELOPMENT**

Recommendation

It is recommended that the City Council consider adopting the proposed Resolution to adopt the new and modified planning application fees for the Community Development Department (Planning Division).

Executive Summary

This report proposes the establishment or revision of Planning Division application fees aligned with the new design review process established by Ordinance No. 2394, which the Council adopted on April 16, 2025 and went into effect on May 16, 2025. The fees are based on the cost of City staff time and in some cases the cost for review by the contracted City Architect. The fee resolution also proposes fees for two existing processes, ADU review and Cultural Heritage Commission (CHC) Chair review of residential projects, for which the fee schedule does not currently include an explicit application fee. As required by the Government Code, the methodology and fee calculations (Attachment 2) have been posted on the Planning Division web page since June 6, 2025, and notice of the proposed fees was twice published in the South Pasadena Review, on June 6 and June 13, 2025. Per State law, the new fees will become effective 60 days after the adoption date.

Background

The Council adopted Ordinance 2394 to amend the Zoning Code, which becomes effective on May 16, 2025. At that time, new processes for design review will be implemented. The new processes result in changing levels of review that impact the amount of staff time required. Additionally, some application types require that the contracted City Architect review the project plans, and it is proposed to include the cost of this service in the fee based on the hourly rate.

For some types of requests, there will be time savings, based on the transition from requiring a board hearing to a ministerial level of review. In the case of new single-family home applications, which will now require Planning Commission approval rather than Design Review Board approval, the existing fee remains appropriate and there is no proposed fee included herein.

Analysis
The fees included in the draft resolution are as follows:

Director Design Review:	$360
PC Chair Design Review - Residential	$910
PC Chair - Commercial	$1,090
Sign Permit (Administrative)	$360
Sign Program	$910
ADU Review - Ministerial	$360
CHC Chair Review - Residential	$545
City Architect Review Fee - New Single Family	$340
City Architect Review Fee - Multi Family for projects requiring discretionary permit	$1,360

Methodology
In order to determine an appropriate fee level, the Community Development Department did an analysis of staff's review and preparation time for each permit type, multiplying it by the hourly Planning rate ($182 in the current adopted master fee schedule). As relevant to the permit type, a fee for review time by the City architect was also factored into the equation. The number of hours of staff time was determined as a composite estimate based on experience over the past year reported by individual planners.

The PC Chair Design Review is a new process, so the time estimate has been based on the experience of DRB Chair review and analysis of staff's role in the new process. It is anticipated that commercial structures eligible for Chair review will take more time and effort than residential remodels subject to Chair review.

Although the CHC Chair review is not a new process, the master fee schedule does not currently have a fee for residential projects requiring CHC Chair review. The three-hour estimate (compared to PC Chair review time of five hours) represents an average between the simpler CHC processes and the more complex. For non-historic buildings, the equivalent of many of the simpler requests can now be staff-approved (average of two hours). Accordingly, factoring in some relatively shorter reviews with more complex reviews results in a lower time estimate for CHC review than for PC Chair review, and hence a lower proposed fee.

The fee resolution includes an "ADU - Ministerial" fee, because to date the Council has not adopted a fee specifically for review of ADUs. Given the many ADU applications processed annually, it is appropriate to establish a fee, and staff has reported that the average time to process them is about two hours. The proposed fee is based on this analysis.

The review for a new single-family home has been moved from DRB to the Planning Commission, but the process and staff time involved are similar, so the existing fee on the master fee schedule is proposed to remain the same ($2,353) and is not included in this analysis, although a fee to cover review by the City Architect is proposed to be added. A City Architect fee for multi-family projects is proposed to be applied for discretionary projects (Planning Commission). For ministerial multi-family projects, a deposit is taken for this service and the hourly fee is applied.

It should also be noted that in addition to the above fees, the City has adopted a Technology

fee (10% of the base fee) and a fee for notice publication ($336) is added to the application fee if a notice is required.

The calculations for the proposed fees are provided in Attachment 2. If adopted, they will become effective after 60 days, on August 17, 2025.

Alternatives
As an alternative to the recommendation herein, the Council may choose to:
1. Adopt lower fees, effectively subsidizing the application process; or
2. Not adopt the proposed fees.

Fiscal Impact
The impact of adopting the proposed fees is that the City will be compensated for City staff time, as well as the review time of the City architect, in service of processing applications submitted for design review. These fees will be transparent and publicly available on the master fee schedule.

Public Notification
In compliance with California Government Code Section 66018, two public hearing notices were published. The first notice was published on Friday, June 6, 2025, in the South Pasadena Review. A second notice was published one week later on Friday, June 13, 2025. In addition, the public was made aware that this item was to be considered at a public hearing by virtue of its inclusion on the legally publicly noticed agenda, and the posting of the same agenda and reports on the City's website.

Attachment:
Attachment No. 1 - Draft Fee Resolution for Planning Fees
Attachment No. 2 - Fee Calculations
Attachment No. 3 - Presentation

Attachment No. 1

RESOLUTION NO.

A RESOLUTION OF THE CITY COUNCIL OF THE CITY OF SOUTH PASADENA, CALIFORNIA, ADOPTING NEW PLANNING APPLICATION FEES AND AMENDING EXISTING PLANNING FEES IN THE CITY'S MASTER FEE SCHEDULE

WHEREAS, as set forth in the previous Resolutions, the City Council has established, amended and modified fees, charges and requirement payments for municipal services and other indicated purposes as set forth therein and all such fees and charges are set forth in the City's "Master Fee Schedule;"

WHEREAS, the City of South Pasadena has adopted a new design review process and amended other processes in its Zoning Code related to development, which now require the City to establish new and/or revised planning application fees;

WHEREAS, notice of a public hearing has been provided as required by State law and the City Council held a duly public hearing on the proposed fees described herein on June 18, 2025 at its regular City Council meeting;

NOW, THEREFORE, THE CITY COUNCIL OF THE CITY OF SOUTH PASADENA, CALIFORNIA, DOES RESOLVE, DECLARE, DETERMINE AND ORDER AS FOLLOWS:

SECTION 1. The recitals set forth above are true and correct and incorporated herein as is set forth in full.

SECTION 2. The fees set forth in Exhibit A are hereby adopted ("Fees"). Fees charged upon a development project, as defined in Government Code Section 66000, and as set forth in Exhibit A shall be effective 60 days after the date this Resolution is adopted.

SECTION 3. The Fees do not exceed the estimated reasonable cost of providing the service for which the fee is imposed.

SECTION 4. The City Council is taking action only on the Fees set forth in Exhibit A. Such fees shall be incorporated into the City's Master Fee Schedule.

SECTION 5. The City Clerk shall certify to the adoption of this resolution.

PASSED, APPROVED AND ADOPTED ON this 18th day of June, 2025.

Janet Braun, Mayor

ATTEST:

Hector Gomez, Chief City Clerk

APPROVED AS TO FORM:

Roxanne Diaz, City Attorney

I HEREBY CERTIFY the foregoing resolution was duly adopted by the City Council of the City of South Pasadena, California, at a meeting held on the 18t day of June, 2025, by the following vote:

AYES:

NOES:

ABSENT:

ABSTAINED:

Hector Gomez, Chief City Clerk
(seal)

EXHIBIT A

FEE SCHEDULE

Director Design Review	$360
PC Chair Design Review - Residential	$910
Sign Permit (Administrative)	$360
Sign Program	$910
Replace fee for “Commercial (less than 2,000)” with new fee: PC Chair - Commercial	$1,090
ADU Review - Ministerial	$360
CHC Fees	
Chair Review - Residential	$545
City Architect Review Fee - New Single Family	$340
City Architect Review Fee - Multi Family project requiring discretionary review	$1,360

Proposed Planning Application Fees - Calculations

The following table provides the calculations for the proposed fees; recommended fees are rounded down to the nearest number ending in 0 or 5.

Planning Division: Fee Study for New Design Review Processes					
	Staff time	Hourly $	Total	Arch. Hourly	Recommended Fee
Director Design Review	2	182	364		$360
PC Chair Design Review - Residential	5	182	910		$910
Sign Permit (Administrative)	2	182	364		$360
Sign Program	5	182	910		$910
Replace fee for "Commercial (less than 2,000)" with new fee: PC Chair - Commercial	6	182	1092		$1,090
ADU Review - Ministerial	2	182	364		$360
CHC Fees					
Chair Review - Residential	3	182	546		$545
City Architect Review Fee - New Single Family	0.5	182	91	250	$340
City Architect Review Fee - Multi Family project requiring discretionary review	2	182	364	1000	$1,360

Public Hearing Item

Fee Resolution for Planning Fees

June 18, 2025

Prepared By: Community Development Department

City of SOUTH PASADENA

Background

- **04/16/25: City Council adopted an Ordinance to approve a Zone Text Amendment for new design review process and other changes**
- **05/16/25: Ordinance took effect (after 30 days of adoption)**
- **New fees and modifications to existing fees required to implement new processes**

Fee Calculation

Planning Division: Fee Study for New Design Review Processes					
	Staff time	Hourly $	Total	Arch. Hourly	Recommended Fee
Director Design Review	2	182	364		$360
PC Chair Design Review - Residential	5	182	910		$910
Sign Permit (Administrative)	2	182	364		$360
Sign Program	5	182	910		$910
Replace fee for "Commercial (less than 2,000)" with new fee: PC Chair - Commercial	6	182	1092		$1,090
ADU Review - Ministerial	2	182	364		$360
CHC Fees					
Chair Review - Residential	3	182	546		$545
City Architect Review Fee - New Single Family	0.5	182	91	250	$340
City Architect Review Fee - Multi Family project requiring discretionary review	2	182	364	1000	$1,360

Recommendation

- **It is recommended that the City Council:**
  - *It is recommended that the Council adopt the proposed application fees for the Community Development Department (Planning Division) per the draft fee resolution*

City Council Agenda Report

ITEM NO. 24

DATE: June 18, 2025

FROM: Todd Hileman, City Manager

PREPARED BY: William Castrillon, Budget and Purchasing Manager
Michael Vartanians, Principal Engineer

SUBJECT: **CONSIDERATION OF ADOPTION OF A RESOLUTION APPROVING THE FISCAL YEAR 2025-2026 ANNUAL CAPITAL IMPROVEMENT PROGRAM AND BUDGET AND APPROVING THE FISCAL YEAR 2025-2026 THROUGH 2029-2030 CAPITAL IMPROVEMENT PROGRAM**

Recommendation

It is recommended that the City Council consider adopting a Resolution approving the Fiscal Year 2025-26 annual Capital Budgets and approving the Fiscal Year 2025-26 through 2029-2030 Five-Year Capital Improvement Program (CIP), making a finding of consistency with the City's General Plan.

Background

The Capital Improvement Program is a planning and management document used to coordinate the location, timing, and financing of capital improvements in the City over a multi-year period based on the City Council's direction and anticipated funding availability.

The City's goal in providing a Capital Improvement Program is to develop a five-year plan for capital improvements that will follow each infrastructure element of the General Plan. The process of preparing a five-year capital forecast is beneficial as it helps to maintain and update the City's General Plan and flags infrastructure needs. In determining the relative merit of a proposed project, key management team members evaluate projects for feasibility, community enhancement, infrastructure and historic preservation, and safety.

Analysis

Five-Year Capital Improvement Plan

On June 4, 2025, a joint meeting of the City Council and Finance Commission took place to discuss the proposed five-year Capital Improvement Program. During this meeting, staff presented a detailed plan covering the fiscal years 2025/26 to 2029/30, along with the projected carryover amounts from the fiscal year 2024/25. A detailed breakdown of carryovers by project and fund are shown on Attachment 1.

This five-year Capital Improvement Plan (CIP) outlines the infrastructure needs for the City over the next five years. It includes a capital plan for 111 projects classified in 11 different categories, with a total projected cost of $187,302,724, including carryover amounts of approximately $10,598,148 as shown on Table 1. All projects and expenditures identified for

future fiscal years beyond 2025/26 are approved on a planning basis and do not receive expenditure authority until they are part of the capital budget for that fiscal year.

Out of the 11 project categories, three account for approximately 84.5% of the total funding. The categories are Transportation, representing 43.6%; Streets and Sidewalks at 31.3%; and Water Projects at 9.6%. In the Transportation category, there are 20 projects totaling $81.6 million, with about $46.3 million allocated specifically for the Fair Oaks SR-110 Interchange On/Off ramps project. In the Streets and Sidewalks category, there are 18 projects with a cost totaling $58.6 million. Approximately $20.6 million is allocated for the Orange Zone Reconstruction project, and $14.3 million for the East Monterey Reconstruction project. The Water category has 6 projects totaling $18.0 million, with $15.8 million allocated for the Westside Reservoir Design and Construction project.

Table 1
FY 2025/26 through FY 2029/30 Capital Improvement Plan

Categories	No. of Projects	Carry Overs	FY 2025/26 Proposed Budget	FY 2026/27	FY 2027/28	FY 2028/29	FY 2029/30	Total
General Building & Facilities	17	$528,990	$387,680	$2,120,000	$825,000	$500,000	$500,000	$4,861,670
Housing Authority	1	-	-	$30,000	$30,000	$30,000	$30,000	$120,000
Information Technology	6	$269,481	($10,588)	-	-	-	-	$258,893
Library	14	$435,155	$112,076	$827,148	$243,960	$450,000	$500,000	$2,568,338
Community Services & Parks	18	$2,729,230	$463,000	$260,000	$910,000	$1,875,000	$1,675,000	$7,912,230
Sewer	1	$321,093	$1,000,000	$1,000,000	$1,300,000	$1,000,000	$1,300,000	$5,921,093
Stormwater	7	$232,232	($660,000)	-	$633,407	$580,666	$6,226,053	$7,012,359
Streets & Sidewalks	18	$1,788,760	$10,359,231	$22,794,458	$14,165,000	$4,575,000	$4,915,000	$58,597,449
Sustainability	3	$235,359	$10,000	$5,000	$200,000	-	-	$450,359
Transportation	20	$3,407,847	$3,094,679	$29,977,806	$23,250,000	$5,020,000	$14,750,000	$81,600,332
Water	6	$650,000	$650,000	$2,400,000	$7,520,000	$6,330,000	$450,000	$18,000,000
Totals	**111**	**$10,598,147**	**$15,406,078**	**$59,414,412**	**$51,177,367**	**$20,360,666**	**$30,346,053**	**$187,302,723**

FY 20255/26 Proposed Capital Budget

The proposed capital budget for the fiscal year 2025/2026 is $15,406,078, which will be allocated to 36 high-priority capital projects. Three projects will be defunded either because they have been completed and came in under budget or because they were canceled. Detailed information on these completed or canceled projects can be found in Attachment 1. The remaining funds will be returned to the funding source for reallocation to other projects.

Out of the 11 CIP categories, 10 will receive new funding: General Building and Facilities, Information Technology, Library, Community Services and Parks, Sewer, Stormwater, Streets and Sidewalks, Sustainability, Transportation, and Water. Table 2 shows the proposed budget distribution for the new fiscal year for each project, organized by category, funding source, project type, status, and dollar amounts.

Table 2
FY 2025/26
Project Expenditure by Category

CIP Category	Amount	No. of Projects
General Building & Facilities	$387,680	9
Information Technology	($10,588)	3
Library	$112,076	3
Community Services & Parks	$463,000	4
Sewer	$1,000,000	1
Stormwater	($660,000)	3
Streets & Sidewalks	$10,359,231	7
Sustainability	$10,000	1
Transportation	$3,094,679	7
Water	$650,000	2
Totals	**$15,406,078**	**40**

Funding Sources – FY 2025/26
The funding sources and corresponding budget amounts for the $15.4 million FY 2025/26 Proposed CIP Budget are detailed in Table 3.

About 11.6% or $1.79 million will be allocated from General Fund sources for projects related to Street and Sidewalk, Library, and General Building Facilities. Approximately 49.5% of the funding will be allocated to Water and Sewer-related projects, while the remaining 38.9% will be dedicated to various other project categories.

Table 3
Proposed FY 2025/2026
Capital Revenue Sources by Fund

Funding Source	Fund	FY 2025/26
General Fund	101	($300,000)
Street Improvement Fund	104	$1,743,516
Facilities & Equipment Replacement Fund	105	$487,076
North-South Corridor ITS Deployment Fund (former SR-110)	108	-
Special Projects Fund	116	($137,936)
General Fund Related		$1,792,655
San Pascual Stables CIP Fund	101 - Stables	$303,000
Capital Growth	255	-
Asset Forfeiture	270	-
Reserves or Funds with Wide Eligibility		**$303,000**
Proposition A Local Return (Transit)	205	$90,000

Proposition C Local Return (Transit)	207	(210,000)
Measure R Local Return (Transportation)	233	1,225,000
Measure M Local Return (Transportation)	236	1,316,047
Measure W Local Return (Stormwater)	239	365,028
Specific Eligibility Local Return Funds		**$2,786,075**
Carlyle Library Bequest	209	-
SB2 Planning Grant (Completed)	213	-
Rogan Federal Transportation Fund	214	-
Housing Authority	228	-
State Gas Tax	230	(200,000)
Measure M MAT Cycle 1 Grant	234	298,632
Road Maintenance & Rehabilitation (RMRA) SB1 Fund	237	624,645
Mobile Source Reduction Committee (MSRC) AQMD Grants	238	-
Measure M Subregional Program (MSP) Fund	240	200,000
Measure R Mobility Improvement Program (MIP) Fund	243	2,000,000
Transportation Development Act (TDA) Fund	245	-
Metropolitan Water District Grant	250	(500,000)
LA County Regional Park & Open Space District (RPOSD) Measure A	251	-
Proposition 68 2018 Parks Bond Act Per Capita Grant	252	-
Community Development Block Grant (Federal)	260	226,070
Park Impact Fees Fund	275	-
Highway Safety Improvement Program	277	-
2000 Tax Allocation Bond Fund	327	250,000
SR-710 Local Alternative Transportation Program Fund	710-LATIP	-
Special Funds & Grants		**$2,899,347**
Sewer Enterprise Fund	210	1,250,000
Water Enterprise Fund	500	6,290,000
Water Efficiency Fund	503	-
Golf Course Enterprise Fund	295	85,000
Enterprise Funds		**$7,625,000**
Total Funding Sources		**$15,406,077**

Fiscal Impact

If the FY 2025/26 Proposed CIP Budget is approved the fiscal impact will be $15,406,708 across various as indicated in Table 3 FY 2025/2026 Capital Revenue Sources By Fund. City Manager Comment. This revised CIP budget is approximately $780,000 higher than presented at the June 5 meeting. This additional cost largely represents $780,000 in contract staffing augmentation and construction management services for the Slurry Seal, Fremont, Huntington, and Fair Oaks projects to ensure they stay on track. Funding for these costs was available in Measure M and Measure R reserves. William Castrillon will review in further detail on June 19.

Attachment:
Attachment No. 1 - Resolution
Exhibit A - CIP Review

RESOLUTION NO

A RESOLUTION OF THE CITY COUNCIL OF THE CITY OF SOUTH PASADENA, CALIFORNIA, ADOPTING THE FISCAL YEAR 2025-2026 THROUGH 2029-2030 CAPITAL IMPROVEMENT PROGRAM AND ADOPTING THE ANNUAL CAPITAL IMPROVEMENT PROGRAM BUDGET FOR FISCAL YEAR 2025-2026

WHEREAS, the City Manager has submitted to the City Council a proposed five-year Capital Improvement Program for Fiscal Year 2025-2026 through Fiscal Year 2029-2030;

WHEREAS, the City Manager has submitted to the City Council a proposed annual Capital Improvement Program budget for the Fiscal Year 2025-2026;

WHEREAS, the City Council held a duly noticed public hearing on the proposed Capital Improvement Program on June 18, 2025 as required by law;

NOW, THEREFORE, THE CITY COUNCIL OF THE CITY OF SOUTH PASADENA, CALIFORNIA, DOES RESOLVE, DECLARE, DETERMINE AND ORDER AS FOLLOWS:

SECTION 1. The foregoing recitals are true and correct and are hereby adopted by the City Council.

SECTION 2. The City Council finds that the five-year Capital Improvement Program for Fiscal Year 2025-2026 through Fiscal Year 2029-2030 as set forth in Exhibit A is consistent with the General Plan.

SECTION 3. The five-year Capital Improvement Program for Fiscal Year 2025-2026 through Fiscal Year 2029-2030 as set forth in Exhibit A is hereby approved and adopted.

SECTION 4. The Fiscal Year 2025-2026 Capital Improvement Program budget as set forth in Exhibit A is hereby approved and adopted. Funds in the amount of $15.046,708 are hereby appropriated as described in Exhibit A beginning July 1, 2025 and ending June 30, 2026.

SECTION 5. The City Clerk's Office of the City of South Pasadena shall certify the passage and adoption of this resolution and its approval by the City Council and shall cause the same to be listed in the records of the City.

PASSED, APPROVED AND ADOPTED ON this 18th day of June, 2025.

Janet Braun, Mayor

ATTEST:

Hector Gomez, Chief City Clerk

APPROVED AS TO FORM:

Roxanne Diaz, City Attorney

EXHIBIT A

CIP Simplified Revenue & Expenditures Table

FY 25-26 Total: $26,004,225

Revenue / Funding Applied to CIP

Fund Name	Fund No.	Appropriated 2024-2025	Projected 2024-2025	Carryover from 2024-2025	New Proposed 2025-2026	Proposed 2026-2027	Proposed 2027-2028	Proposed 2028-2029	Proposed 2029-2030	Total Proposed 5-Year
Total		**$ 17,645,961**	**$ 3,781,978**	**$ 10,598,148**	**$ 15,406,077**	**$ 59,314,413**	**$ 51,177,367**	**$ 20,360,666**	**$ 30,346,053**	**$187,202,724**
General Fund Related (Discretionary)		$ 4,300,707	$ 1,200,486	$ 2,785,101	$ 1,792,655	$ 5,870,682	$ 12,274,960	$ 500,000	$ 3,000,000	$ 26,223,398
General Fund	101	300,000	-	-	(300,000)	-	-	-	-	(300,000)
Street Improvement Fund	104	957,897	200,000	762,667	1,743,516	4,328,278	12,000,000	-	2,500,000	21,334,461
Facilities & Equipment Replacement Fund	105	1,364,025	589,880	774,145	487,076	1,347,148	274,960	500,000	500,000	3,883,328
North-South Corridor ITS Deployment Fund (form	108	136,356	11,470	124,886	-	190,256	-	-	-	315,142
Special Projects Fund	116	1,542,429	399,136	1,123,403	(137,936)	5,000	-	-	-	990,467
Reserves or Funds with Wide Eligibility		$ 8,757	$ 11,470	$ 54,359	$ 303,000	$ 669,198	$ -	$ -	$ -	$ 1,026,556
San Pascual Stables CIP Fund	Stables	-	-	-	303,000	-	-	-	-	303,000
Capital Growth	255	8,757	11,470	54,359	-	519,198	-	-	-	573,556
Asset Forfeiture	270	-	-	-	-	150,000	-	-	-	150,000
Specific Eligibility Local Return Funds		$ 1,504,144	$ 732,272	$ 426,820	$ 2,786,075	$ 1,836,164	$ 600,000	$ 535,000	$ 900,000	$ 7,084,059
Proposition A Local Return (Transit)	205	-	-	-	90,000	259,194	-	-	-	349,194
Proposition C Local Return (Transit)	207	300,000	-	-	(210,000)	276,970	-	175,000	-	241,970
Measure R Local Return (Transportation)	233	560,754	322,000	200,971	1,225,000	650,000	150,000	180,000	450,000	2,855,971
Measure M Local Return (Transportation)	236	540,754	319,850	200,971	1,316,047	650,000	150,000	180,000	450,000	2,947,018
Measure W Local Return (Stormwater)	239	102,636	90,422	24,878	365,028	-	300,000	-	-	689,906
Special Funds & Grants		$ 7,297,210	$ 1,261,751	$ 5,259,307	$ 2,899,347	$ 25,647,450	$ 27,245,000	$ 4,145,000	$ 15,795,000	$ 80,991,104
Carlyle Library Bequest	209	-	-	-	-	-	-	-	-	-
SB2 Planning Grant (Completed)	213	-	-	-	-	-	-	-	-	-
Rogan Federal Transportation Fund	214	1,083,735	177,060	906,675	-	8,092,582	-	-	-	8,999,257
Housing Authority	228	30,000	-	-	-	30,000	30,000	30,000	30,000	120,000
State Gas Tax	230	200,000	-	-	(200,000)	-	-	-	-	(200,000)
Measure M MAT Cycle 1 Grant	234	912,600	-	912,600	298,632	4,844,928	-	-	-	6,056,160
Road Maintenance & Rehabilitation (RMRA) SB1 F	237	585,093	-	585,093	624,645	201,180	1,400,000	-	1,400,000	4,210,918
Mobile Source Reduction Committee (MSRC) AQ	238	102,700	2,700	100,000	-	-	-	-	-	100,000
Measure M Subregional Program (MSP) Fund	240	372,624	-	372,624	200,000	1,100,000	650,000	-	-	2,322,624
Measure R Mobility Improvement Program (MIP) F	243	600,000	-	600,000	2,000,000	10,400,000	25,000,000	4,000,000	14,250,000	56,250,000
Transportation Development Act (TDA) Fund	245	25,000	-	-	-	-	50,000	-	-	50,000
Metropolitan Water District Grant	250	500,000	-	-	(500,000)	-	-	-	-	(500,000)
LA County Regional Park & Open Space District (F	251	550,000	137,500	412,500	-	-	-	-	-	412,500
Proposition 68 2018 Parks Bond Act Per Capita G	252	193,992	48,498	145,494	-	-	-	-	-	145,494
Community Development Block Grant (Federal)	260	564,663	564,663	-	226,070	115,000	115,000	115,000	115,000	686,070
Park Impact Fees Fund	275	1,324,078	330,520	993,559	-	-	-	-	-	993,559
Highway Safety Improvement Program	277	252,725	810	230,762	-	540,760	-	-	-	771,522
2000 Tax Allocation Bond Fund	327	-	-	-	250,000	-	-	-	-	250,000
SR-710 Local Alternative Transportation Program	710-LATIP	-	-	-	-	323,000	-	-	-	323,000

Revenue / Funding Applied to CIP (continued from previous page)

Enterprise Funds		$ 4,535,143	$ 576,000	$ 2,072,562	$ 7,625,000	$ 19,885,000	$ 8,905,000	$ 11,430,000	$ 1,750,000	$ 51,667,562
Sewer Enterprise Fund	210	510,000	136,000	430,093	1,250,000	2,150,000	1,300,000	1,100,000	1,300,000	7,530,093
Water Enterprise Fund	500	2,960,000	319,000	906,000	6,290,000	17,650,000	7,520,000	10,330,000	450,000	43,146,000
Water Efficiency Fund ($.14 for every cubic unit o	503	200,000	10,000	(17,674)	-	-	-	-	-	(17,674)
Golf Course Enterprise Fund	295	865,143	111,000	754,143	85,000	85,000	85,000	-	-	1,009,143

Potential Grant Awards or Not Yet Funded		$ -	$ -	$ -	$ -	$ 5,405,918	$ 2,152,407	$ 3,750,666	$ 8,901,053	$ 20,210,045
Potential Award	248	-	-	-	-	1,000,000	-	-	3,114,685	4,114,685
Not Yet Funded	Not Funded	-	-	-	-	4,405,918	2,152,407	3,750,666	5,786,368	16,095,360

Contract & Staff CIP Support Allocation:

7.43 FTEs

Project Expenditures

						FY 25-26 Total: $26,004,225								
				Appropriated	Projected	Carryover from	New Proposed	Proposed	Proposed	Proposed	Proposed	Total Proposed		
ID	Acct	Project Name	Fund No(s).	2024-2025	2024-2025	2024-2025	2025-2026	2026-2027	2027-2028	2028-2029	2029-2030	5-Year	Status	FY 25-26 Work (qty 62)	FY 25-26 FTE Equiv. Staff Allocation
Total				**$ 17,645,961**	**$ 3,781,978**	**$ 10,598,148**	**$ 15,406,077**	**$ 59,414,413**	**$ 51,177,367**	**$ 20,360,666**	**$ 30,346,053**	**$187,302,724**			
						FY 25-26 Total: $916,670									
General Building & Facilities (9001) Subtotals				**$ 1,045,025**	**$ 513,715**	**$ 528,990**	**$ 387,680**	**$ 2,120,000**	**$ 825,000**	**$ 500,000**	**$ 500,000**	**$ 4,861,670**			
5139	9224	Citywide Facilities Repairs	105	329,570	216,810	112,760	-	100,000	100,000	500,000	500,000	1,312,760	In Progress	✓	15%
5178	9226	FD Fire Station Front Bay Apparatus Door Replacem	**105,116**	**208,295**	**205,975**	**-**	**(2,320)**	**-**	**-**	**-**	**-**	**(2,320)**	Completed	-	-
5175	9229	PD Locker Room Remodel	**105,270**	**90,000**	**-**	**90,000**	**-**	**250,000**	**-**	**-**	**-**	**340,000**	Not Started	✓	20%
5174	9230	PD Front Counter/Lobby Remodel	105	-	-	-	40,000	-	-	-	-	40,000	Not Started	✓	10%
5176	9231	PD Briefing/Training Room Update	105	-	-	-	40,000	-	-	-	-	40,000	Not Started	✓	10%
5177	9232	PD 1st Floor Interior Paint, Drywall, & Millwork-	105	-	-	-	-	-	-	-	-	-	Completed	-	-
5159	9242	War Memorial Sound System	105	-	-	-	50,000	-	-	-	-	50,000	Not Started	✓	5%
5141	9269	War Memorial HVAC Repairs	105	-	-	-	45,000	-	-	-	-	45,000	Not Started	✓	10%
5160	9273	Citywide Facilities Key System	105	20,000	20,000	-	-	100,000	100,000	-	-	200,000	In Progress	-	-
5138	9404	Citywide Facilities Assessment/ Security Enhancem	105	287,160	64,930	222,230	-	100,000	-	-	-	322,230	In Progress	✓	15%
5213	9214	FD Diesel Exhaust System Replacement	105	50,000	-	50,000	80,000	-	-	-	-	130,000	Not Started	✓	5%
5210	9330	Senior Center Flooring	105	60,000	6,000	54,000	-	-	-	-	-	54,000	In Progress	✓	15%
TBD	TBD	Fire Department Dormitory Expansion	**Partial Fund**	**-**	**-**	**-**	**55,000**	**-**	**350,000**	**-**	**-**	**405,000**	Not Started	✓	20%
TBD	TBD	War Memorial Floor Replacement	**Partial Fund**	**-**	**-**	**-**	**-**	**20,000**	**275,000**	**-**	**-**	**295,000**	Not Started	✓	10%
TBD	TBD	War Memorial Basement Waterproofing	105	-	-	-	20,000	100,000	-	-	-	120,000	Not Started	✓	5%
TBD	TBD	Police & Fire Vehicle Access Gate Rehabilitation	105	-	-	-	60,000	-	-	-	-	60,000	Not Started	✓	2%
TBD	TBD	Police Radio Tower	**Partial Fund**	**-**	**-**	**-**	**-**	**1,450,000**	**-**	**-**	**-**	**1,450,000**	Not Started	✓	5%

						FY 25-26 Total: $0										
Housing Authority (9002) **Subtotals**			**Fund No(s).**	**Appropriated 2024-2025** **$ 30,000**	**Projected 2024-2025** **$ -**	**Carryover from 2024-2025** **$ -**	**New Proposed 2025-2026** **$ -**	**Proposed 2026-2027** **$ 30,000**	**Proposed 2027-2028** **$ 30,000**	**Proposed 2028-2029** **$ 30,000**	**Proposed 2029-2030** **$ 30,000**	**Total Proposed 5-Year** **$ 120,000**	**Status**	**FY 25-26 Work** (qty 0)	**FY 25-26 FTE Equiv. Staff Allocation**
5214	9342	308 San Pascual Residence Improvements	228	30,000	-	-	-	30,000	30,000	30,000	30,000	120,000	In Progress	-	-

						FY 25-26 Total: $258,893										
Information Technology (9003) **Subtotals**			**Fund No(s).**	**Appropriated 2024-2025** **$ 362,630**	**Projected 2024-2025** **$ 62,561**	**Carryover from 2024-2025** **$ 269,481**	**New Proposed 2025-2026** **$ (10,588)**	**Proposed 2026-2027** **$ -**	**Proposed 2027-2028** **$ -**	**Proposed 2028-2029** **$ -**	**Proposed 2029-2030** **$ -**	**Total Proposed 5-Year** **$ 258,893**	**Status**	**FY 25-26 Work** (qty 3)	**FY 25-26 FTE Equiv. Staff Allocation**
5144	9149	Voice-over Internet Protocol (VoIP) Phone/Network	116	21,549	12,561	-	(8,988)	-	-	-	-	(8,988)	Completed	-	-
5142	9186	CD Permit Management Software	**116,213**	**109,481**	**50,000**	**59,481**	**20,000**	**-**	**-**	**-**	**-**	**79,481**	In Progress	✓	15%
5137	9407	Computerized Maintenance Mgmt System (CMMS) /	**210,500**	**120,000**	**-**	**120,000**	**-**	**-**	**-**	**-**	**-**	**120,000**	Not Started	✓	25%
5146	9182	Agenda Management System	116	21,600	-	-	(21,600)	-	-	-	-	(21,600)	Completed	-	-
5215	9183	City Website System & Design	116	-	-	-	-	-	-	-	-	-	Completed	-	-
TBD	94x2	City Technology & Financial Systems	116	90,000	-	90,000	-	-	-	-	-	90,000	Not Started	✓	35%

						FY 25-26 Total: $547,231										
Library (9004) **Subtotals**			**Fund No(s).**	**Appropriated 2024-2025** **$ 632,295**	**Projected 2024-2025** **$ 197,140**	**Carryover from 2024-2025** **$ 435,155**	**New Proposed 2025-2026** **$ 112,076**	**Proposed 2026-2027** **$ 827,148**	**Proposed 2027-2028** **$ 243,960**	**Proposed 2028-2029** **$ 450,000**	**Proposed 2029-2030** **$ 500,000**	**Total Proposed 5-Year** **$ 2,568,338**	**Status**	**FY 25-26 Work** (qty 6)	**FY 25-26 FTE Equiv. Staff Allocation**
5148	9301	Library HVAC Repairs	105	-	-	-	-	275,000	-	-	-	275,000	In Progress	-	-
5149	9322	Library Northeast Ramp Lighting and Improvements	105	73,054	18,000	55,054	-	-	-	-	-	55,054	In Progress	✓	15%
5147	9405	Library Security Improvements	105	120,698	54,140	66,558	40,000	-	-	-	-	106,558	In Progress	✓	20%
5216	9328	Library Facility Improvements	105	31,907	6,400	25,507	57,076	-	-	-	-	82,583	In Progress	✓	15%
5217	9329	Library Roof & Waterproofing	105	166,636	68,600	98,036	-	450,000	-	-	-	548,036	In Progress	✓	20%
5152	TBD	Library Radio Frequency Identification (RFID)	116	90,000	-	90,000	15,000	-	-	-	-	105,000	Not Started	✓	15%
TBD	9338	Library & Community Center Comprehensive Site Pl	116	150,000	50,000	100,000	-	-	-	-	-	100,000	In Progress	✓	10%
TBD	Future	Library Fire Alarm Control System	105	-	-	-	-	64,033	-	-	-	64,033	Not Started	-	-
TBD	Future	Library Electrical Distribution Equipment	105	-	-	-	-	38,115	-	-	-	38,115	Not Started	-	-
TBD	Future	Library Exterior Paint and Protective Coatings	105	-	-	-	-	-	74,960	-	-	74,960	Not Started	-	-
5153	Future	Library Exterior Park Lighting	Not Funded	-	-	-	-	-	169,000	-	-	169,000	Not Started	-	-
5154	Future	Library Public Restrooms Expansion/Remodel	Not Funded	-	-	-	-	-	-	450,000	-	450,000	Not Started	-	-
5155	Future	Library Emergency Backup & Storage System	Not Funded	-	-	-	-	-	-	-	500,000	500,000	Not Started	-	-
TBD	Future	Library Children's Amphitheatre Wing	209	-	-	-	-	-	-	-	-	-	Not Started	-	-

						FY 25-26 Total: $3,192,230									
Community Services & Parks (9005)			**Fund No(s).**	**Appropriated 2024-2025** $ 3,512,348	**Projected 2024-2025** $ 783,118	**Carryover from 2024-2025** $ 2,729,230	**New Proposed 2025-2026** $ 463,000	**Proposed 2026-2027** $ 260,000	**Proposed 2027-2028** $ 910,000	**Proposed 2028-2029** $ 1,875,000	**Proposed 2029-2030** $ 1,675,000	**Total Proposed 5-Year** $ 7,912,230	Status	FY 25-26 Work (qty 6)	FY 25-26 FTE Equiv. Staff Allocation
5157	9033	Grevalia & Berkshire Pocket Parks	**Multiple**	**2,312,000**	**578,000**	**1,734,000**	**-**	**-**	**-**	**-**	**-**	**1,734,000**	In Progress	✓	5%
5158	9157	Golf Course/Driving Range Netting Replacement	295	730,143	1,000	729,143	-	-	-	-	-	729,143	In Progress	✓	5%
5161	9367	Parks Master Plan	**116,275**	**285,205**	**94,118**	**191,087**	**-**	**-**	**-**	**-**	**-**	**191,087**	In Progress	✓	5%
5162	9369	Snake Trail Improvements	275	50,000	-	50,000						50,000	Not Started	✓	10%
TBD	Future	Arroyo Seco Golf Course Comprehensive Plan	295	135,000	110,000	25,000						25,000	In Progress	✓	0%
TBD	Future	Eddie Park House Improvements	**Multiple**	**-**	**-**	**-**	**75,000**	**175,000**	**175,000**	**175,000**	**175,000**	**775,000**	Not Started	✓	10%
TBD	TBD	Golf Course Equipment Replacement	295	-	-	-	85,000	85,000	85,000			255,000	Not Started	-	-
TBD	TBD	San Pascual Main Arena Fencing	Stables	-	-	-	79,500	-	-	-	-	79,500	Not Started	-	-
TBD	TBD	Side Arena Footing, Fencing, Irrigation, Lighting, and	Stables	-	-	-	223,500	-	-	-	-	223,500	Not Started	-	-
TBD	TBD	Skate Park Equipment Replacement	Not Funded	-	-	-	-	-	100,000	1,000,000	-	1,100,000	Not Started	-	-
5166	Future	Orange Grove Gazebo	Not Funded	-	-	-	-	-	150,000	-	-	150,000	Not Started	-	-
5167	Future	Orange Grove Park Playground Replacement	Not Funded	-	-	-	-	-	200,000	-	-	200,000	Not Started	-	-
5168	Future	Garfield Park Playground Replacement	Not Funded	-	-	-	-	-	200,000	150,000	-	350,000	Not Started	-	-
5169	Future	Arroyo Walking Trail	Not Funded	-	-	-	-	-	-	200,000	-	200,000	Not Started	-	-
5170	Future	Garfield Gazebo	Not Funded	-	-	-	-	-	-	200,000	-	200,000	Not Started	-	-
5171	Future	Eddie Park Playground Replacement	Not Funded	-	-	-	-	-	-	150,000	-	150,000	Not Started	-	-
5172	Future	Arroyo Park Sports Complex Renovations	Not Funded	-	-	-	-	-	-	-	750,000	750,000	Not Started	-	-
5173	Future	Orange Grove Sports Complex Renovations	Not Funded	-	-	-	-	-	-	-	750,000	750,000	Not Started	-	-

						FY 25-26 Total: $1,321,093									
Sewer (9006)			**Fund No(s).**	**Appropriated 2024-2025** $ 400,000	**Projected 2024-2025** $ 135,000	**Carryover from 2024-2025** $ 321,093	**New Proposed 2025-2026** $ 1,000,000	**Proposed 2026-2027** $ 1,000,000	**Proposed 2027-2028** $ 1,300,000	**Proposed 2028-2029** $ 1,000,000	**Proposed 2029-2030** $ 1,300,000	**Total Proposed 5-Year** $ 5,921,093	Status	FY 25-26 Work (qty 1)	FY 25-26 FTE Equiv. Staff Allocation
5179	9408	Sewer System Repair, Rehabilitation, & Replacemer	210	400,000	135,000	321,093	1,000,000	1,000,000	1,300,000	1,000,000	1,300,000	5,921,093	In Progress	✓	50%

						-FY 25-26 Total: $427,768									
Stormwater (9007)			**Fund No(s).**	**Appropriated 2024-2025** $ 1,332,006	**Projected 2024-2025** $ 100,422	**Carryover from 2024-2025** $ 232,232	**New Proposed 2025-2026** $ (660,000)	**Proposed 2026-2027** $ -	**Proposed 2027-2028** $ 633,407	**Proposed 2028-2029** $ 580,666	**Proposed 2029-2030** $ 6,226,053	**Total Proposed 5-Year** $ 7,012,359	Status	FY 25-26 Work (qty 4)	FY 25-26 FTE Equiv. Staff Allocation
5181	9364	Rio Hondo Load Reduction (LRS) Alhambra Wash Tr	239	55,000		55,000	-	-	-	-	-	55,000	Not Started	✓	1%
5182	9411	Huntington Drive Green Street	239	10,136	-	22,800	-	-	-	-	-	22,800	In Progress	✓	2%
5219	9412	City Hall Stormwater Project	**Multiple**	**900,000**	**10,000**	**(117,674)**	**(800,000)**	**-**	**-**	**-**	**-**	**(917,674)**	Cancelled	✓	0%
5180	9413	Arroyo Seco San Rafael & San Pascual Projects	**Multiple**	**366,870**	**90,422**	**272,106**	**80,000**	**-**	**-**	**-**	**-**	**352,106**	In Progress	✓	5%
5183	Future	Arroyo Park Infiltration Gallery & Recreation Field Im	**Multiple**	**-**	**-**	**-**	**-**	**-**	**333,407**	**580,666**	**6,226,053**	**7,140,127**	In Progress	-	-
5184	Future	Camino Verde Pocket Park	Not Funded	-	-	-	-	-	-	-	-	-	In Progress	-	-
TBD	TBD	Hanscom Drive Drainage Improvements	239	-	-	-	60,000	-	300,000	-	-	360,000	In Progress	-	-

						FY 25-26 Total: $12,147,991								
Streets & Sidewalks (9008)			**Fund No(s).**	**Appropriated 2024-2025**	**Projected 2024-2025**	**Carryover from 2024-2025**	**New Proposed 2025-2026**	**Proposed 2026-2027**	**Proposed 2027-2028**	**Proposed 2028-2029**	**Proposed 2029-2030**	**Total Proposed 5-Year**	Status	FY 25-26 Work (qty 9)	FY 25-26 FTE Equiv. Staff Allocation
				$ 3,692,653	**$ 1,383,663**	**$ 1,788,760**	**$ 10,359,231**	**$ 22,794,458**	**$ 14,165,000**	**$ 4,575,000**	**$ 4,915,000**	**$ 58,597,449**			
5185	9203	Street Repavement & Repairs	**Multiple**	**2,632,990**	**765,000**	**1,347,760**	**7,043,161**	**-**	**-**	**-**	**-**	**8,390,921**	In Progress	✓	50%
5186	9264	FY20-FY24 Sidewalk Replacement & ADA Ramps	**236,260**	**609,663**	**609,663**	**-**	**-**	**-**	**-**	**-**	**-**	**-**	In Progress	-	-
TBD	TBD	2025-2026 Street Maintenance	**233,236**	**-**	**-**	**-**	**450,000**	**450,000**	**-**	**-**	**-**	**900,000**	Not Started	✓	5%
TBD	TBD	2025-2026 Marengo Maintenance & Improvements	**233,236**	**-**	**-**	**-**	**100,000**	**300,000**	**-**	**-**	**-**	**400,000**	Not Started	✓	8%
TBD	TBD	Mission/Arroyo/Pasadena Intersections Improveme	**Multiple**	**-**	**-**	**-**	**180,000**	**1,228,278**	**350,000**	**-**	**-**	**1,758,278**	In Progress	✓	8%
TBD	9204	Indiana & Pasadena Reconstruction	**Multiple**	**450,000**	**9,000**	**441,000**	**210,000**	**9,301,180**	**-**	**-**	**-**	**9,952,180**	In Progress	✓	10%
TBD	TBD	FY24-25 Sidewalk Replacement & ADA Ramps	260	-	-	-	108,710	-	-	-	-	108,710	Not Started	✓	3%
TBD	TBD	FY25-26 Sidewalk Replacement & ADA Ramps	260	-	-	-	117,360	-	-	-	-	117,360	Not Started	✓	3%
TBD	TBD	Orange Zone Reconstruction	**Multiple**	**-**	**-**	**-**	**2,150,000**	**11,000,000**	**7,400,000**	**-**	**-**	**20,550,000**	In Progress	✓	15%
TBD	TBD	2026-2027 Street Maintenance	**233,236**	**-**	**-**	**-**	**-**	**400,000**	**-**	**-**	**-**	**400,000**	Not Started	✓	8%
TBD	TBD	FY26-27 Sidewalk Replacement & ADA Ramps	260	-	-	-	-	115,000	-	-	-	115,000	Not Started	-	-
TBD	TBD	East Monterey Reconstruction	**Multiple**	**-**	**-**	**-**	**-**	**-**	**6,250,000**	**4,100,000**	**3,900,000**	**14,250,000**	Not Started	-	-
TBD	TBD	FY27-28 Sidewalk Replacement & ADA Ramps	260	-	-	-	-	-	115,000	-	-	115,000	Not Started	-	-
TBD	TBD	Orange Grove Maintenance	**233,236**	**-**	**-**	**-**	**-**	**-**	**50,000**	**200,000**	**-**	**250,000**	Not Started	-	-
TBD	TBD	FY28-29 Sidewalk Replacement & ADA Ramps	260	-	-	-	-	-	-	115,000	-	115,000	Not Started	-	-
TBD	TBD	Pasadena & Monterey Maintenance	**233,236**	**-**	**-**	**-**	**-**	**-**	**-**	**100,000**	**600,000**	**700,000**	Not Started	-	-
TBD	TBD	FY29-30 Sidewalk Replacement & ADA Ramps	260	-	-	-	-	-	-	-	115,000	115,000	Not Started	-	-
TBD	TBD	Garfield/Grevelia & Atlantic Maintenance	**233,236**	**-**	**-**	**-**	**-**	**-**	**-**	**60,000**	**300,000**	**360,000**	Not Started	-	-

						FY 25-26 Total: $245,359								
Sustainability (9009)			**Fund No(s).**	**Appropriated 2024-2025**	**Projected 2024-2025**	**Carryover from 2024-2025**	**New Proposed 2025-2026**	**Proposed 2026-2027**	**Proposed 2027-2028**	**Proposed 2028-2029**	**Proposed 2029-2030**	**Total Proposed 5-Year**	Status	FY 25-26 Work (qty 3)	FY 25-26 FTE Equiv. Staff Allocation
				$ 280,699	**$ 62,700**	**$ 235,359**	**$ 10,000**	**$ 5,000**	**$ 200,000**	**$ -**	**$ -**	**$ 450,359**			
5103	9188	Civic Center/City Hall EV Charging Systems	**116,238**	**230,699**	**62,700**	**185,359**	**-**	**-**	**-**	**-**	**-**	**185,359**	In Progress	✓	10%
5188	9189	Storage Yard EV Charging Systems	116	50,000	-	50,000	-	-	-	-	-	50,000	In Progress	✓	5%
5187	TBD	Civic Center/Mound Solar Panel Installation	116	-	-	-	10,000	5,000	-	-	-	15,000	In Progress	✓	2%
TBD	TBD	Urban Forest Management Plan	Not Funded	-	-	-	-	-	200,000	-	-	200,000	Not Started	-	-

						FY 25-26 Total: $6,502,526									
Transportation (9010)			**Fund No(s).**	**Appropriated 2024-2025** $ 3,658,305	**Projected 2024-2025** $ 228,660	**Carryover from 2024-2025** $ 3,407,847	**New Proposed 2025-2026** $ 3,094,679	**Proposed 2026-2027** $ 29,977,806	**Proposed 2027-2028** $ 25,350,000	**Proposed 2028-2029** $ 5,020,000	**Proposed 2029-2030** $ 14,750,000	**Total Proposed 5-Year** $ 81,600,332	Status	FY 25-26 Work (qty 12)	FY 25-26 FTE Equiv. Staff Allocation
		Fremont Avenue & Huntington Drive Corridor Proj	**Multiple**	**1,512,600**	**-**	**1,512,600**	**798,632**	**18,739,606**	**-**	**-**	**-**	**21,050,838**	In Progress	✓	50%
2002	9161	North-South Corridor (Fair Oaks) ITS Deployment	**Multiple**	**1,228,848**	**200,000**	**1,085,920**	**180,000**	**9,088,200**	**-**	**-**	**-**	**10,354,120**	In Progress	✓	30%
5129	9290	Grevelia Street and Fair Oaks Avenue	240	50,000	-	50,000	-	150,000	-	-	-	200,000	In Progress	✓	8%
5130	9350	Pedestrian Crossing Devices	240	322,624	-	322,624	-	-	-			322,624	In Progress	✓	8%
1512	9351	Rectangular Rapid Flashing Beacons (Mission & Fre	**236,277**	**252,725**	**18,660**	**230,762**	**41,047**	**-**	**-**	**-**	**-**	**271,809**	In Progress	✓	8%
5218	9421	Special Transportation Accounts	**233,236**	**141,508**	**10,000**	**55,941**	**-**	**-**	**-**	**-**	**-**	**55,941**	In Progress	✓	2%
5135	9423	Citywide Mobility / Active Transport Plan Update	**233,236**	**150,000**	**-**	**150,000**	**-**	**150,000**	**-**	**-**	**-**	**300,000**	Not Started	✓	25%
5131	TBD	Garfield Avenue and Monterey Road Traffic Signal ar	240	-	-	-	100,000	-	-	-	-	100,000	In Progress	✓	5%
5132	TBD	Columbia Street Striping and Signals	240	-	-	-	50,000	250,000	-	-	-	300,000	In Progress	✓	5%
5133	TBD	Orange Grove Avenue Project	240	-	-	-	50,000	100,000	350,000	-	-	500,000	Not Started	✓	5%
2007	9311	Fair Oaks SR-110 Interchange On/Off-Ramps	243	-	-	-	1,500,000	1,500,000	25,000,000	4,000,000	14,250,000	46,250,000	In Progress	✓	5%
TBD	TBD	Mission Maintenance & Slow Street	**Partial Funded**	**-**	**-**	**-**	**375,000**	**-**	**-**	**620,000**	**-**	**995,000**	In Progress	✓	10%
5134	TBD	Mission-Merdian-El Centro Bollard System	Not Funded	-	-	-	-	-	-	100,000	200,000	300,000	Not Started	-	-
5136	TBD	Traffic Signal Controller & Cabinet Replacement	Not Funded	-	-	-	-	-	-	300,000	300,000	600,000	Not Started	-	-

						FY 25-26 Total: $1,300,000									
Water (9011)			**Fund No(s).**	**Appropriated 2024-2025 $ 2,700,000**	**Projected 2024-2025 315,000**	**Carryover from 2024-2025 650,000**	**New Proposed 2025-2026 650,000**	**Proposed 2026-2027 2,400,000**	**Proposed 2027-2028 7,520,000**	**Proposed 2028-2029 6,330,000**	**Proposed 2029-2030 450,000**	**Total Proposed 5-Year 18,000,000**	Status	FY 25-26 Work (qty 4)	FY 25-26 FTE Equiv. Staff Allocation
5190	9300	Water Main Pipeline Repairs	500	2,000,000	65,000	200,000	-	-	-	-	-	200,000	In Progress	✓	10%
5192	9348	Water Facility Site Improvements	500	-	-	-	-	250,000	250,000	250,000	250,000	1,000,000	Not Started	-	-
5193	9349	Advanced Metering Infrastructure (AMI)	500	150,000	-	150,000	-	-	-	-	-	150,000	In Progress	✓	5%
5110	9409	Westside Reservoir Design/Construction	500	550,000	250,000	300,000	500,000	2,000,000	7,000,000	6,000,000	-	15,800,000	In Progress	✓	20%
5191	9414	Raymond & Bilikie Elevated Tanks Study & Imprv	500	-	-	-	-	-	120,000	80,000	200,000	400,000	Not Started	-	-
5194	Future	SCADA Upgrade	500	-	-	-	150,000	150,000	150,000	-	-	450,000	Not Started	✓	10%

City Council Agenda Report

ITEM NO. 25

DATE: June 18, 2025

FROM: Todd Hileman, City Manager

PREPARED BY: Michael Vartanians, Principal Engineer

SUBJECT: **CONSIDERATION OF AN AWARD OF A CONSTRUCTION CONTRACT WITH GENTRY BROTHERS, INC. IN AN AMOUNT NOT TO EXCEED $7,574,000 FOR THE FY19-20 STREET IMPROVEMENT PROJECT AND APPROVE THE PLANS AND SPECIFICATIONS FOR THE PROJECT**

Recommendation

It is recommended that the City Council consider:

1. Approving the plans and specifications for the Street Improvements Project (Project); and
2. Awarding a construction contract to Gentry Brothers, Inc. for construction services for street improvements in an amount not to exceed $7,589,040.00, including the proposed bid amount of $6,885,400.00 and a contingency of $703,640.00; and
3. Reject all other bids received; and
4. Authorize the City Manager to execute the contract.

Executive Summary

The City's Fiscal Year (FY) 2025-2026 Capital Improvement Program (CIP) includes the construction of street and water improvements. This item proposes the approval of a construction contract to initiate construction of the asphalt concrete and water main improvements, among other actions related to the Project.

Background

The City's Public Works Department is responsible for developing and implementing the City's Capital Improvement Program (CIP), including improvements of the City's street, water and sewer infrastructure. The award of a contract (Attachment 1) to a construction vendor for street improvement projects is subject to approval by the City Council as a Public Works Contract pursuant to the South Pasadena Municipal Code.

Analysis

The City of South Pasadena Public Works Department solicited bids from street improvement contractors through a Notice Inviting Bids posted on the PlanetBids website on May 19th, 2025. In addition, the solicitation was advertised on the Dodge Construction Network, Bid America, and Kern County Builders Exchange. The Notice Inviting Bids was also published in the South Pasadena Review on May 23rd, 2025. The advertisement included the project plans, specifications with engineer's estimate, and other contract documents. Eighty-four (84) firms were notified of the proposal opportunity through PlanetBids, in addition to the

notification that occurred from the other project bid sites. Fifty-four (54) prospective bidders expressed interest in participating, and seven (7) prospective bidders submitted proposals during the bid period.

The Project work consists of furnishing all materials, equipment, tools, labor, and incidentals required to complete the improvements shown on the project plans, specifications and contract documents consisting generally of asphalt concrete pavement rehabilitation, replacement of water main lines and repair of sanitary sewer pipes on the following streets:

- Arroyo Verde Road (Marmion Way to Monterey Road)
- Glendon Way (Lyndon Street to Monterey Road)
- Mill Road (Garfield Avenue to End of Street)
- Milan Avenue (Oak Street to Edgewood Drive)
- Edgewood Drive Milan Avenue to Wayne Avenue)
- Pine Street (Meridian Avenue to Ramona Avenue)
- Oneonta Knoll Street (Fremont Avenue to Primrose Avenue)
- Maple Street (Fremont Avenue to Primrose Avenue)
- Maple Street (Meridian Avenue to Huntington Drive)

More specifically the Project also includes construction and repair of portland cement concrete (PCC) sidewalks, curb and gutters, driveways, cross gutters and curb ramps, asphalt concrete pavement rehabilitation, water line repair and replacement, sanitary sewer repairs, utility adjustments and/or relocations, thermoplastic traffic striping, markings, legends & raised pavement markers, traffic & pedestrian control, construction staking, monument preservation and restoration, stormwater compliance and all appurtenant work thereto necessary for the proper construction of the infrastructure improvements. Proposals were received through June 9th, 2025 from the following seven (7) firms:

Bidder No.	Bidder	Bid Amount
1	Gentry Brothers, Inc.	$6,885,400.00
2	Sulley-Miller Contracting Company	$8,373,000.00
3	Sequel Contractors, Inc.	$8,384,450.00
4	Excel Paving	$8,458,892.00
5	All American Asphalt	$9,334,175.00
6	Gentry General Engineering, Inc.	$10,265,056.00

7	Toro Enterprises, Inc.	$10,452,412.00

South Pasadena Municipal Code (SPMC) Chapter 2 Administration, Article XI describes the City's purchasing rules. Specifically, SPMC Section 2.99-39 defines the purchasing procedure to award a Public Works Contract to the lowest responsible bidder. Contracts resulting from competitive bidding are awarded based on the lowest responsible bidder who submitted a bid that was responsive to the solicitation request. A bid is considered to be responsive if it conforms in all material respects to the solicitation requirements, and a bidder is considered to be responsible if they possess the demonstrated ability, capacity, experience and skill to provide the goods and/or services required by the solicitation.

Bidder No. 1 (see above table), Gentry Brothers, Inc., is located in Irwindale, and its proposed bid of $6,885,400.00 is the lowest responsive bid of the received bid proposals. The company has recent street improvement contracts and is appropriately licensed and qualified to perform the work.

The City's engineer team reviewed the design plans and specifications for the FY19-20 Street Improvement Project, and in their opinion the project plans and specifications are reasonable and meet professional engineering standards. Therefore, it is recommended that the City Council approve the Project plans and specifications which are on file in the Department of Public Works and included as an attachment to this item (Attachments 2 & 3).

Fiscal Impact
Funding for this project will be available in the Fiscal Year 2025-2026 Budget under the Streets & Sidewalks Street Repavement & Repairs CIP Project, with $7,589,040.00 appropriated to CIP Account No. 400-9000-9008-9203-000. This account consists of a $1,977,154.00 transfer from the Fund 104 Street Improvement Fund Account, a $1,200,000.00 transfer from the Fund 237 Road Maintenance & Rehabilitation (RMRA) SB1 Fund Account, a transfer of $250,000.00 from the Fund 233 Measure R Local Return Account, a transfer of $250,000.00 from the fund 236 Measure M Local Return Account, a transfer of $100,000.00 from the Fund 210 Sewer Enterprise Fund Account and a transfer of $3,886,883.00 from the Fund 500 Water Enterprise Fund Account. These transfers consider funding that will be adopted in Fiscal Year 2025-2026 when both new proposed funding is adopted and carry over funding from Fiscal Year 2024-2025 has been transferred into the Fiscal Year 2025-2026 budget.

Key Performance Indicators and Strategic Plan
This item is related to street improvement goals in the City Council's 2025 compilation of priorities, number 2(a).

Commission Review and Recommendation
The FY 19-20 Street Improvement Project has been discussed at multiple meetings of the Mobility and Infrastructure Transportation Commission, Public Works Commission and the Public Works Infrastructure Commission throughout the development of the Project.

Public Notification
The public was made aware that this item was to be considered this evening by virtue of its inclusion on the legally publicly noticed agenda, posting of the same agenda and reports on the City's website.

Environmental Analysis
This item is exempt from the California Environmental Quality Act (CEQA) analysis based on State CEQA Guidelines Section requirements under Section 21084 of the Public Resources Code, in accordance with Article 19, Section 15301, Class (1) "existing facilities."

Attachment:
Attachment No. 1 - Contract Agreement
Attachment No. 2 - Project Plans
Attachment No. 3 - Project Specifications

CONTRACT AGREEMENT

FY 19-20 STREET IMPROVEMENT PROJECT
PROJECT SPECIFICATION NO. 2020-01 (002001)
IN THE CITY OF SOUTH PASADENA, CALIFORNIA

THIS AGREEMENT ("AGREEMENT") is made and entered into for the above-stated project this _____ day of_____, 20__ *(Council Action Date)*, BY AND BETWEEN the City of South Pasadena, a municipal corporation, hereafter designated as "AGENCY", and _____ a _____
[CONTRACTOR'S BUSINESS NAME] [corporation, partnership, limited liability company, or other business form]

in the State of _____, hereafter designated as "CONTRACTOR."

WITNESSETH that AGENCY and CONTRACTOR have mutually agreed as follows:

1) **Project Name:** FY 19-20 Street Improvement Project, SPECIFICATION NO. 2020-01 (002001)
2) **Project Scope of Work:** CONTRACTOR shall provide and install:

All materials, equipment, tools, labor, and incidentals required to complete the improvements shown on the Specifications and Contract Documents. The work performed under this contract is summarized in the Notice Inviting Sealed Bids and includes, but is not limited to each bid item listed in the Contractor's Bid Proposal, as covered in the Standard Specifications, and as described in the corresponding items on the following pages. The work in general, to be performed pursuant to these specifications, consists of pavement rehabilitation and replacement of mains, valves, water services, meters, and other appurtenances. The project also includes repair of damaged PCC curb and gutter, sidewalks, and driveways at various locations within the project limits, sawcut, removal and disposal of existing asphalt roadway sections, removal of macadam and subgrade, cold milling of existing pavement, subgrade preparation and compaction, crushed miscellaneous base (CMB), asphalt concrete pavement, removal and reconstruction of damaged PCC curb and gutter, sidewalk, driveway approaches, and ADA curb ramps, utility adjustments, installation of new water meters, services, valves, and appurtenances, sewer line repairs, traffic signing, thermoplastic striping and pavement markings; traffic control and all appurtenant work thereto necessary for the proper construction of the contemplated improvements, in accordance to Plans and Specification entitled as FY 19-20 Street Improvement Project 2020-01 (002001).

The limits of work include:

- **Arroyo Verde Road (Marmion Way to Monterey Road)**
- **Glendon Way (Lyndon Street to Monterey Road)**
- **Mill Road (Garfield Avenue to end of roadway)**
- **Milan Avenue (Oak Street to Edgewood Drive)**
- **Edgewood Drive (Milan Avenue to Wayne Avenue)**

- **Pine Street (Meridian Avenue to Huntington Drive)**
- **Oneonta Knoll Street (Fremont Avenue to Primrose Avenue)**
- **Maple Street (Fremont Avenue to Primrose Avenue)**
- **Maple Street (Meridian Avenue to Huntington Drive)**

3) **Contract Documents:** The complete contract and agreement ("AGREEMENT") consists of this Contract Agreement, including all attachments hereto, and:

- Approved Plans and Specifications for City Project No. 2020-01 (002001)
- Notice Inviting Sealed Bids
- Instructions to Bidders
- Information for Bidders
- Contractor's Bid Proposal
- Bid Schedule
- Standard Specifications
- Special Provisions
- All reference specifications, plans, details, standard drawings, and appendices
- Bonds, insurance certificates, permits, notices, and affidavits
- Appendices, Addendums, and Memorandums
- And all mutually agreed-upon modifications and amendments thereto.

4) **Compensation:** CITY agrees to pay, and CONTRACTOR agrees to accept in full payment for the Work, the stipulated sum of _____ Dollars, ($_____).
5) **Time of Completion:** 150 Working Days *[see B1.03 CONTRACT PERIOD/CONSTRUCTION COMPLETION DATE of Section B Instruction to Bidders]*.
6) **Liquidated Damages:** $6,700 for each calendar day delay beyond the Time of Completion *[see 6-9 LIQUIDATED DAMAGES of Section F – Special Provisions]*.
7) **Notices:** Any notices, bills, invoices, or reports required by this Agreement shall be addressed to:

To CITY:

City of South Pasadena
Public Works Department
1414 Mission Street
South Pasadena, CA 91030

To CONTRACTOR:

Contractor's Name _____
Address _____
_____
City, State Zip Code _____

IN WITNESS WHEREOF the parties hereto for themselves, their heirs, executors, administrators, successors, and assigns do hereby agree to the full performance of the covenants herein contained and have caused this AGREEMENT to be executed in duplicate by setting hereunto their names, titles, hands, and seals this _____ day of _____, 20__ *(Council Action Date)*

CONTRACTOR: _____
[CONTRACTOR'S BUSINESS NAME]

_____
CONTRACTOR's Sign Name, Title

CONTRACTOR's License No. _____

AGENCY: _____ _____
L. Todd Hileman, City Manager — Date
City of South Pasadena

ATTESTED: _____ _____
Hector Gomez, Chief City Clerk — Date
City of South Pasadena

APPROVED AS TO FORM: _____ _____
Roxanne Diaz, City Attorney — Date
City of South Pasadena

CERTIFICATE OF ACKNOWLEDGMENT

A notary public or other officer completing this certificate verifies only the identity of the individual who signed the document to which this certificate is attached, and not the truthfulness, accuracy, or validity of that document.

State of California
County of _____

On _____ before me, _____,
(insert name and title of the officer)

personally appeared _____
who proved to me on the basis of satisfactory evidence to be the person(s) whose name(s) is/are subscribed to the within instrument and acknowledged to me that he/she/they executed the same in his/her/their authorized capacity(ies), and that by his/her/their signature(s) on the instrument the person(s), or the entity upon behalf of which the person(s) acted, executed the instrument.

I certify under PENALTY OF PERJURY under the laws of the State of California that the foregoing paragraph is true and correct.

WITNESS my hand and official seal.

Signature_____ (SEAL)

ATTACHMENT A

ADDITIONAL TERMS AND CONDITIONS OF THE AGREEMENT

ARTICLE I: Contract Documents

The complete contract and agreement ("AGREEMENT") consists of the Contract Documents described on the Contract Agreement, and all terms and conditions of this Attachment are incorporated therein. In the event of conflict between these documents, precedence shall be determined under section 2-5.2 of the Standard Specifications.

All of the provisions of the Contract Documents are made a part hereof as though fully set forth herein.

ARTICLE II: Scope of Work

For and in consideration of the payments and agreements to be made and performed by AGENCY, CONTRACTOR agrees to furnish all materials and equipment and perform all work required for the above-stated project, and to fulfill all other obligations as set forth in the aforesaid Contract Documents.

AGENCY hereby employs CONTRACTOR to provide the materials, do the work, and fulfill the obligations according to the terms and conditions herein contained and referred to, for the prices provided herein, and hereby contracts to pay the same at the time, in the manner, and upon the conditions set forth in this AGREEMENT.

In entering into a public works contract or a subcontract to supply goods, services, or materials pursuant to this AGREEMENT, CONTRACTOR offers and agrees to assign to the AGENCY all rights, title, and interest in and to all causes of action it may have under Section 4 of the Clayton Act (15 U.S.C. Sec. 15) or under the Cartwright Act (Chapter 2 (Section 16700, et seq.) of Part 2 of Division 7 of the Business and Professions Code), arising from purchases of goods, services, or materials pursuant to the public works contract or the subcontract. This assignment shall be made and become effective at the time the awarding body tenders final payment to CONTRACTOR, without further acknowledgment by the parties.

ARTICLE III: Compensation

A. CONTRACTOR agrees to receive and accept the prices set forth in the Bid Proposal and Bid Schedule as full compensation for furnishing all materials, performing all work, and fulfilling all obligations hereunder. In no event shall the total compensation and costs payable to CONTRACTOR under this Agreement exceed the sum shown on the Contract Agreement, unless specifically approved in advance and in writing by AGENCY.

Such compensation shall cover all expenses, losses, damages, and consequences arising out of the nature of the work during its progress or prior to its acceptance including those for well and faithfully completing the work and the whole thereof in the manner and time specified in the aforesaid Contract Documents; and also including those arising from actions of the elements,

unforeseen difficulties or obstructions encountered in the prosecution of the work, suspension or discontinuance of the work, and all other unknowns or risks of any description connected with the work. Such unforeseen difficulties or obstructions includes any act of God, the elements, strike, walkout, or any other cause beyond CONTRACTOR's reasonable control that occurs before AGENCY accepts the work as complete.

B. This AGREEMENT is subject to the provisions of Article 1.7 (commencing at Section 20104.50) of Division 2, Part 3 of the Public Contract Code regarding prompt payment of CONTRACTORs by local governments. Article 1.7 mandates certain procedures for the payment of undisputed and properly submitted payment requests within 30 days after receipt, for the review of payment requests, for notice to CONTRACTOR of improper payment requests, and provides for the payment of interest on progress payment requests which are not timely made in accordance with that Article. This AGREEMENT hereby incorporates the provisions of Article 1.7 as though fully set forth herein.

C. At the request and expense of CONTRACTOR, securities equivalent to the amount withheld shall be deposited with AGENCY, or with a state or federally chartered bank in this state as the escrow agent, who shall then pay those moneys to CONTRACTOR upon AGENCY's confirmation of CONTRACTOR'S satisfactory completion of this AGREEMENT. At any time during the term of this AGREEMENT CONTRACTOR may, at its own expense, substitute securities for funds otherwise withheld as retention (or the retained percentage) in accordance with Public Contract Code § 22300.

ARTICLE IV: Labor Code

AGENCY and CONTRACTOR acknowledge that this AGREEMENT is subject to the provisions of Division 2, Part 7, Chapter 1 (commencing with Section 1720) of the California Labor Code relating to public works and public agencies and agree to be bound by all the provisions thereof as though set forth fully herein. Full compensation for conforming to the requirements of the Labor Code and with other Federal, State, and local laws related to labor, and rules, regulations and ordinances which apply to any work performed pursuant to this AGREEMENT is included in the price for all contract items of work involved.

This AGREEMENT is further subject to prevailing wage law, including, but not limited to, the following:

A. The CONTRACTOR shall pay the prevailing wage rates for all work performed under the AGREEMENT. When any craft or classification is omitted from the general prevailing wage determinations, the CONTRACTOR shall pay the wage rate of the craft or classification most closely related to the omitted classification. The CONTRACTOR shall forfeit as a penalty to AGENCY $200.00, or any greater penalty provided in the Labor Code for each Calendar Day, or portion thereof, for each worker paid less than the prevailing wage rates for any work done under the AGREEMENT in violation of the provisions of the Labor Code whether such worker is employed in the execution of the work by CONTRACTOR or by any Subcontractor under CONTRACTOR. In addition, CONTRACTOR shall pay each worker the difference between such prevailing wage rates and the amount paid to each worker for each Calendar Day, or portion thereof, for which each worker was paid less than the prevailing wage rate.

B. CONTRACTOR shall comply with the provisions of Labor Code Section 1777.5 concerning the employment of apprentices on public works projects, and further agrees that CONTRACTOR is responsible for compliance with Section 1777.5 by all of its subcontractors.

C. Pursuant to Labor Code § 1725.5, CONTRACTOR and any subcontractor must be registered with the California Department of Industrial Relations for any bid proposal submitted on or after March 1, 2015, and for any contract for public work entered into on or after April 1, 2015. Further, this project is subject to compliance monitoring and enforcement by the Department of Industrial Relations.

D. Pursuant to Labor Code § 1776, CONTRACTOR and any subcontractor shall keep accurate payroll records, showing the name, address, social security number, work classification, straight time and overtime hours worked each day and week, and the actual per diem wages paid to each journeyman, apprentice, worker, or other employee employed by him or her in connection with this AGREEMENT. Each payroll record shall contain or be verified by a written declaration that it is made under penalty of perjury, stating both of the following: (1) The information contained in the payroll record is true and correct; and (2) The employer has complied with the requirements of Labor Code §§ 1811, and 1815 for any work performed by his or her employees on the public works project. The payroll records enumerated under subdivision (a) shall be certified and shall be available for inspection at all reasonable hours as required by Labor Code § 1776.

E. This AGREEMENT is further subject to 8-hour workday and wage and hour penalty law, including, but not limited to, Labor Code Sections 1810 and 1813, as follows:

CONTRACTOR shall strictly adhere to the provisions of the Labor Code regarding the 8-hour day and the 40-hour week, overtime, Saturday, Sunday and holiday work and nondiscrimination based on race, religious creed, color, national origin, ancestry, physical disability, mental disability, medical condition, marital status, sex, or sexual orientation, except as provided in Section 12940 of the Government Code. Pursuant to the provisions of the Labor Code, eight hours' labor shall constitute a legal day's work. Work performed by CONTRACTOR's employees in excess of eight hours per day, and 40 hours during any one week, must include compensation for all hours worked in excess of eight hours per day, or 40 hours during any one week, at not less than one and one-half times the basic rate of pay. CONTRACTOR shall forfeit as a penalty to AGENCY $25.00, or any greater penalty set forth in the Labor Code for each worker employed in the execution of the work by CONTRACTOR or by any Subcontractor of CONTRACTOR, for each Calendar Day during which such worker is required or permitted to the work more than eight hours in one Calendar Day or more than 40 hours in any one calendar week in violation of the Labor Code.

F. This AGREEMENT is subject to Public Contract Code Section 6109: CONTRACTOR shall be prohibited from performing work on this project with a subcontractor who is ineligible to perform work on the project pursuant to Sections 1777.1 or 1777.7 of the Labor Code.

ARTICLE V: Work Site Conditions

A. In compliance with and pursuant to Government Code Section 4215, AGENCY shall assume the responsibility, as between the parties to this AGREEMENT, for the timely removal, relocation, or protection of existing main- or trunk-line utility facilities located on the site of any construction project that is a subject of this AGREEMENT, if such utilities are not identified by AGENCY in

the plans and specifications made a part of the invitation for bids. The Contract Documents shall include provisions to compensate CONTRACTOR for the costs of locating, repairing damage not due to the failure of CONTRACTOR to exercise reasonable care, and removing or relocating such utility facilities not indicated in the plans and specifications with reasonable accuracy, and for equipment on the project necessarily idled during such work. CONTRACTOR shall not be assessed liquidated damages for delay in completion of the project when such delay was caused by the failure of AGENCY or the owner of a utility to provide for removal or relocation of such utility facilities.

B. To the extent that the work requires trenches in excess of five feet (5') and is estimated to cost more than $25,000, prior to any excavation, CONTRACTOR must provide the AGENCY, or a registered civil or structural engineer employed by the AGENCY to whom authority has been delegated to accept such plans, a detailed plan showing the design of shoring, bracing, sloping, or other provisions to be made for worker protection from the hazard of caving ground during the excavation of such trench or trenches. If such plan varies from the shoring system standards, the plan shall be prepared by a registered civil or structural engineer. Nothing in this section shall be deemed to allow the use of a shoring, sloping, or protective system less effective than that required by the Construction Safety Orders.

C. This AGREEMENT is further subject to Public Contract Code Section 7104 with regard to any trenches deeper than four feet (4') involved in the proposed work as follows:

CONTRACTOR shall promptly, and before the following conditions are disturbed, notify AGENCY, in writing, of any:

(1) Material that CONTRACTOR believes may be hazardous waste, as defined in Section 25117 of the Health and Safety Code, which is required to be removed to a Class I, Class II, or Class III disposal site in accordance with existing law.

(2) Subsurface or latent physical conditions at the site differing from those indicated by all available information provided prior to the deadline for submission of bids.

(3) Unknown physical conditions at the site of any unusual nature, different materially from those ordinarily encountered and generally recognized as inherent in work of the character provided for in the contract.

AGENCY shall promptly investigate the conditions, and if it finds that the conditions do materially so differ, or involve hazardous waste, and cause a decrease or increase in CONTRACTOR's cost of, or the time required for, performance of any part of the work, AGENCY shall issue a change order under the procedures described in this AGREEMENT.

In the event that a dispute arises between AGENCY and CONTRACTOR whether the conditions materially differ, or involve hazardous waste, or cause a decrease or increase in CONTRACTOR's cost of, or time required for, performance of any part of the work, CONTRACTOR shall not be excused from any scheduled completion date provided in the AGREEMENT but shall proceed with all work to be performed under the AGREEMENT. CONTRACTOR shall retain any and all

rights provided either by contract or by law which pertain to the resolution of disputes and protests between the contracting parties.

ARTICLE VI: Insurance

A. With respect to performance of work under this AGREEMENT, CONTRACTOR shall maintain, and shall require all of its subcontractors to maintain, insurance as required by Section E "Standard Specifications" of the Contract Documents.

B. This AGREEMENT is further subject to Workers' Compensation obligations, including, but not limited to, California Labor Code Sections 1860 and 1861 as follows:

CONTRACTOR shall take out and maintain, during the life of this contract, Worker's Compensation Insurance for all of CONTRACTOR's employees employed at the site of improvement; and, if any work is sublet, CONTRACTOR shall require the subcontractor similarly to provide Worker's Compensation Insurance for all of the latter's employees, unless such employees are covered by the protection afforded by CONTRACTOR. CONTRACTOR and any of CONTRACTOR's subcontractors shall be required to provide AGENCY with a written statement acknowledging its obligation to secure payment of Worker's Compensation Insurance as required by Labor Code § 1861; to wit: 'I am aware of the provisions of Section 3700 of the Labor Code which require every employer to be insured against liability for workers' compensation or to undertake self-insurance in accordance with the provisions of that code, and I will comply with such provisions before commencing the performance of the work of this contract.' If any class of employees engaged in work under this AGREEMENT at the site of the Project is not protected under any Worker's Compensation law, CONTRACTOR shall provide and shall cause each subcontractor to provide adequate insurance for the protection of employees not otherwise protected. CONTRACTOR shall indemnify and hold harmless AGENCY for any damage resulting from failure of either CONTRACTOR or any subcontractor to take out or maintain such insurance.

Any available insurance proceeds broader than or in excess of the specified minimum insurance coverage requirements or limits shall be available to AGENCY as additional insured. Further, the requirements for coverage and limits shall be the greater of (1) the maximum coverage and limits specified in this Agreement, or (2) the broader coverage and maximum limits of coverage of any insurance policy or proceeds available to the named insured. Insurance provided by CONTRACTOR under this Contract shall not replace or substitute for CONTRACTOR's indemnification obligations in Article VII.

CONTRACTOR's insurance, including all endorsements, shall be primary to any coverage available to AGENCY. Any insurance or self-insurance maintained by AGENCY and/or its officers, employees, agents, or volunteers, shall be excess of CONTRACTOR's insurance and shall not contribute with it.

ARTICLE VII: Indemnification

To the fullest extent permitted by law, CONTRACTOR shall, at its sole cost and expense, fully defend, indemnify and hold harmless AGENCY, its authorized representatives and their respective

subsidiaries, affiliates, members, directors, officers, subcontractors (including governmental agencies), suppliers, employees and agents (collectively, the "Indemnitees") from and against any and all claims, actions, demands, costs, judgments, liens, penalties, liabilities, damages, losses, and expenses, including but not limited to any fees of accountants, attorneys or other professionals (collectively "Liabilities"), arising out of, in connection with, resulting from or related to, any act, omission, fault or negligence of CONTRACTOR, CONTRACTOR's Representative, or any of its officers, agents, employees, Subcontractors or Suppliers, or any person or organization directly or indirectly employed by any of them (Collectively, the "Indemnitors"), in connection with or relating to or claimed to be in connection with or relating to the work performed under this AGREEMENT. Indemnification includes, but is not limited to, all claims, actions, demands, costs, judgments, liens, penalties, liabilities, damages, losses, and expenses arising out of, in connection with, resulting from or related to changes to the natural environment or environmental harms caused in whole or in part by work performed under this AGREEMENT.

If CONTRACTOR is a joint venture or partnership, each venturer or partner shall be jointly and severally liable for any and all of the duties and obligations of CONTRACTOR that are assumed under or arise out of this AGREEMENT. Each of such venturers or partners waives notice of the breach or non-performance of any undertaking or obligation of CONTRACTOR contained in, resulting from, or assumed under this AGREEMENT, and the failure to give any such notice shall not affect or impair such venturer's or partner's joint and several liability hereunder.

AGENCY may request a deposit for defense costs from CONTRACTOR with respect to a claim. If AGENCY requests a defense deposit, CONTRACTOR shall provide it within 15 days of the request.

ARTICLE VIII: Binding Effect

AGENCY and CONTRACTOR each bind itself, its partners, successors, assigns, and legal representatives to the other party hereto and to its partners, successors, assigns, and legal representatives in respect of all covenants, agreements, and obligations contained in the Contract Documents. This AGREEMENT is not assignable nor the performance of either party's duties delegable without the prior written consent of the other party. Any attempted or purported

assignment or delegation of any of the rights of obligations of either party without the prior written consent of the other shall be void and of no force and effect.

ARTICLE IX: Dispute Resolution

A. All disputes arising out of this AGREEMENT are subject to a mandatory step-by-step claims submission and evaluation process as a precondition to legal action in accordance with Public Contracts Code § 9204.

B. Any court action arising out of this AGREEMENT shall be filed in the Los Angeles County Superior Court. Any alternative dispute resolution proceeding arising out of this AGREEMENT shall be heard in the County of Los Angeles.

C. AGENCY shall have full authority to compromise or otherwise settle any claim relating to this AGREEMENT or any part hereof at any time. AGENCY shall provide timely notification to CONTRACTOR of the receipt of any third-party claim relating to this AGREEMENT. AGENCY shall be entitled to recover its reasonable costs incurred in providing the notification required by this section.

D. This AGREEMENT is further subject to the provisions of Article 1.5 (commencing at Section 20104) of Division 2, Part 3 of the Public Contract Code regarding the resolution of public works claims of less than $375,000. Article 1.5 mandates certain procedures for the filing of claims and supporting documentation by CONTRACTOR, for the response to such claims by the AGENCY, for a mandatory meet and confer conference upon the request of CONTRACTOR, for mandatory nonbinding mediation in the event litigation is commenced, and for mandatory judicial arbitration upon the parties' failure to resolve the dispute through mediation. This AGREEMENT hereby incorporates the provisions of Article 1.5 as though fully set forth herein.

ARTICLE X: Independent CONTRACTOR

CONTRACTOR is and shall at all times remain as to AGENCY, a wholly independent CONTRACTOR. Neither AGENCY nor any of its agents shall have control of the conduct of CONTRACTOR or any of CONTRACTOR's employees, except as herein set forth. CONTRACTOR shall not at any time or in any manner represent that it or any of its agents or employees are in any manner agents or employees of AGENCY.

ARTICLE XI: Taxes

CONTRACTOR is responsible for paying all retail, sales and use, transportation, export, import, special or other taxes and duties applicable to, and assessable against any work, materials, equipment, services, processes, and operations incidental to or involved in this AGREEMENT. The CONTRACTOR is responsible for ascertaining and arranging to pay such taxes and duties. The prices established in this AGREEMENT shall include compensation for any taxes the CONTRACTOR is required to pay by laws and regulations in effect as of the execution of this AGREEMENT.

ARTICLE XII: Notices

All notices and communications shall be sent in writing to the parties at the addresses listed on the Contract Agreement.

ARTICLE XIII: Entire Agreement

This AGREEMENT supersedes any and all other agreements, either oral or written, between the parties and contains all of the covenants and agreements between the parties pertaining to the work of improvements described herein. Each party to this AGREEMENT acknowledges that no representations, inducements, promises or agreements, orally or otherwise, have been made by any party, or anyone acting on behalf of any party, which are not embodied herein, and that any other agreement, statement or promise not contained in this AGREEMENT shall not be valid or binding. Any modification of this AGREEMENT will be effective only if signed by the party to be charged.

The benefits and obligations of this AGREEMENT shall inure to and be binding upon the representatives, agents, partners, heirs, successors and assigns of the parties hereto. This AGREEMENT shall be construed pursuant to the laws of the State of California.

ARTICLE XIV: Authority to Contract

The signatories hereto represent that they are authorized to sign on behalf of the respective parties they represent and are competent to do so, and each of the parties hereto hereby irrevocably waives any and all rights to challenge signatures on these bases.

ARTICLE XV: General Provisions

A. All reports, documents, or other written material ("written products" herein) developed by CONTRACTOR in the performance of this Agreement shall be and remain the property of AGENCY without restriction or limitation upon its use or dissemination by AGENCY. CONTRACTOR may take and retain copies of such written products as desired, but no such written products shall be the subject of a copyright application by CONTRACTOR.

B. In the performance of this Agreement, CONTRACTOR shall not discriminate against any employee, subcontractor, or applicant for employment because of race, color, creed, religion, sex, marital status, sexual orientation, national origin, ancestry, age, physical or mental disability, medical condition, or any other unlawful basis.

C. The captions appearing at the commencement of the sections hereof, and in any paragraph thereof, are descriptive only and for convenience in reference to this Agreement. Should there be any conflict between such heading, and the section or paragraph at the head of which it appears, the section or paragraph hereof, as the case may be, and not such heading, shall control and govern in the construction of this Agreement. Masculine or feminine pronouns shall be substituted for the neuter form and vice versa, and the plural shall be substituted for the singular form and vice versa, in any place or places herein in which the context requires such substitution(s).

D. The waiver by AGENCY or CONTRACTOR of any breach of any term, covenant or condition herein contained shall not be deemed to be a waiver of such term, covenant, or condition or of any subsequent breach of the same or any other term, covenant or condition herein contained. No term,

covenant or condition of this Agreement shall be deemed to have been waived by AGENCY or CONTRACTOR unless in writing.

E. Each right, power and remedy provided for herein or now or hereafter existing at law, in equity, by statute, or otherwise shall be cumulative and shall be in addition to every other right, power, or remedy provided for herein or now or hereafter existing at law, in equity, by statute, or otherwise. The exercise, the commencement of the exercise, or the forbearance of the exercise by any party of any one or more of such rights, powers or remedies shall not preclude the simultaneous or later exercise by such party of any of all of such other rights, powers, or remedies.

F. CONTRACTOR shall maintain any and all ledgers, books of account, invoices, vouchers, canceled checks, and other records or documents evidencing or relating to charges for services or expenditures and disbursements charged to AGENCY under this Agreement for a minimum of three (3) years, or for any longer period required by law, from the date of final payment to CONTRACTOR under this Agreement. All such documents shall be made available for inspection, audit, and/or copying at any time during regular business hours, upon oral or written request of AGENCY. In addition, pursuant to Government Code Section 8546.7, if the amount of public funds expended under this Agreement exceeds ten thousand dollars, all such documents and this Agreement shall be subject to the examination and audit of the State Auditor, at the request of AGENCY or as part of any audit of AGENCY, for a period of three (3) years after final payment under the Agreement.

(End of Attachment A)

(ATTACH TO EXECUTED CONTRACT AGREEMENT)

ATTACHMENT B

Plans, Forms, & Specifications

Attachment No. 2

CITY OF SOUTH PASADENA
FY 2019-20
STREET AND WATER IMPROVEMENT PROJECT
PROJECT NO. 2020-01 (2001)

INSTRUCTIONS TO CONTRACTOR

1. ALL WORK SHALL CONFORM TO THE "STANDARD PLANS AND SPECIFICATIONS FOR PUBLIC WORKS CONSTRUCTION", LATEST EDITION, INCLUDING SUPPLEMENTS, AND THE CITY OF SOUTH PASADENA DEPARTMENT OF PUBLIC WORKS "STANDARD PLANS AND SPECIFICATIONS".
2. APPLICATION FOR INSPECTION TO THE CITY OF SOUTH PASADENA DEPARTMENT OF PUBLIC WORKS SHALL BE MADE BY THE CONTRACTOR BEFORE THE SERVICES THEREOF WILL BE REQUIRED. REQUESTS FOR INSPECTION SHALL BE MADE 48 HOURS IN ADVANCE OF REQUIRED INSPECTION.
3. WORK IN PUBLIC STREETS, ONCE BEGUN, SHALL BE COMPLETED WITHOUT DELAY SO AS TO PROVIDE MINIMUM INCONVENIENCE TO ADJACENT PROPERTY OWNERS AND TO THE TRAVELING PUBLIC.
4. THE CONTRACTOR SHALL TAKE ALL NECESSARY AND PROPER PRECAUTIONS TO PROTECT ADJACENT PROPERTIES FROM ANY AND ALL DAMAGE THAT MAY OCCUR FROM STORM WATER RUNOFF AND/OR DEPOSITION OF DEBRIS RESULTING FROM ANY AND ALL WORK IN CONNECTION WITH CONSTRUCTION ACTIVITIES.
5. THE CONTRACTOR SHALL BE RESPONSIBLE FOR THE CLEARING OF THE PROPOSED WORK AREA, AND RELOCATION COSTS OF ALL EXISTING UTILITIES. PERMITTEE MUST INFORM CITY OF CONSTRUCTION SCHEDULE AT LEAST 48 HOURS PRIOR TO BEGINNING OF CONSTRUCTION.
6. IT SHALL BE THE RESPONSIBILITY OF THE CONTRACTOR TO NOTIFY THE ENGINEER TO INSTALL STREET CENTERLINE MONUMENTS AS REQUIRED BY CITY ORDINANCE FOR NEW DEVELOPMENTS AND REPLACEMENT OF DISTURBED OR COVERED EXISTING MONUMENTS.
7. IT SHALL BE THE RESPONSIBILITY OF THE CONTRACTOR TO APPLY TO THE CITY ENGINEER'S OFFICE, PERMIT SECTION, PRIOR TO CONSTRUCTION FOR AN ENCROACHMENT PERMIT FOR ALL WORK WITHIN THE PUBLIC RIGHT-OF-WAY.
8. NO TRENCHES MAY BE LEFT OPEN OVERNIGHT UNLESS APPROVED BY THE CITY ENGINEER.
9. IF ANY UTILITIES OR FACILITIES CONFLICT WITH PROPOSED IMPROVEMENTS, ALL WORK SHALL STOP, AND THE CITY ENGINEER SHALL BE NOTIFIED IMMEDIATELY.
10. ALL TRAFFIC CONTROL DEVICES, SIGNS, TEMPORARY MARKINGS OR STRIPING SHALL BE IN PLACE UPON COMPLETION OF PAVING. TRAFFIC CONTROL SHALL BE APPROVED BY THE CITY ENGINEER.
11. . ALL TRAFFIC CONTROL DEVICES MUST BE NEW OR NEAR NEW CONSTRUCTION.
12. DRIVEWAY INFORMATION IS TENTATIVE. CONTRACTOR SHALL CONSULT WITH THE CITY ENGINEER PRIOR TO CONSTRUCTION.
13. THE CONTRACTOR SHALL NOTIFY UNDERGROUND SERVICE ALERT (U.S.A.) AS REQUIRED PRIOR TO THE START OF WORK. UPON EXPOSING ANY UTILITY'S UNDERGROUND FACILITY THE CONTRACTOR SHALL NOTIFY THAT UTILITY IMMEDIATELY.
14. IT SHALL BE THE RESPONSIBILITY OF THE CONTRACTOR TO LOCATE ALL SUBSTRUCTURES WITHIN THE ALIGNMENT OF THE PROPOSED IMPROVEMENTS, AND IN THE EVENT OF SUBSTRUCTURE DAMAGE, HE SHALL BEAR THE TOTAL COST OF REPAIR OR REPLACEMENT.
15. THE CONTRACTOR SHALL NOT CONDUCT ANY OPERATIONS OR PERFORM ANY WORK PERTAINING TO THE PROJECT BETWEEN 5:00 P.M. AND 7:00 A.M. ON ANY DAY NOR ON SATURDAY, SUNDAY, HOLIDAY AT ANY TIME EXCEPT AS APPROVED BY THE ENGINEER.
16. TREES, FOLIAGE, SIGNS, AND OTHER IMPROVEMENTS SHALL BE PROTECTED IN PLACE AND ANY DAMAGE TO EXISTING IMPROVEMENTS SHALL BE REPLACED IN KIND.
17. THE CONTRACTOR IS ADVISED THAT ALL EXCAVATED MATERIALS SHALL BECOME HIS PROPERTY AND SHALL BE REMOVED FROM THE JOB-SITE UNLESS INSTRUCTED BY THE CITY ENGINEER TO DO OTHERWISE.
18. THE CONTRACTOR SHALL BE RESPONSIBLE DURING ALL PHASES OF THE WORK TO PROVIDE FOR PUBLIC SAFETY AND CONVENIENCE. THE CONTRACTOR SHALL ESTABLISH ADEQUATE ACCESS TO DRIVEWAYS AT THE END OF EACH WORKING DAY TO THE SATISFACTION OF THE CITY ENGINEER.
19. THE CONTRACTOR SHALL ADJUST ALL MANHOLE AND VALVE COVERS TO FINISHED GRADE.
20. THE CONTRACTOR SHALL PROVIDE A TRAFFIC CONTROL PLAN FOR THE COMPLETION OF THE PROPOSED IMPROVEMENTS PER THE "WORK AREA TRAFFIC CONTROL HANDBOOK" (W.A.T.C.H.) AND/OR PART 6, TEMPORARY TRAFFIC CONTROL, OF THE CAMUTCD TO THE SATISFACTION OF THE CITY ENGINEER. THE CONTRACTOR WILL BE ALLOW TO CLOSE STREETS WITHIN THE PROJECT AREA TO TRAFFIC FROM 8:00 A.M. TO 4:30 P.M., EXCEPT THAT NO TWO ADJACENT STREETS SHALL BE CLOSED AT ANY ONE TIME.
21. THE CONTRACTOR SHALL PROVIDE A 72-HOUR NOTIFICATION TO THE AFFECTED PROPERTIES, POLICE DEPARTMENT, AND FIRE DEPARTMENT IN THE EVENT OF A CHANGE IN STREET CLOSURE TO TRAFFIC AND/OR PUBLIC SAFETY VEHICLES, PARKING RESTRICTIONS, AND ON EACH MONDAY MORNING DURING THE CONSTRUCTION PERIOD.
22. COLD PLANING OPERATIONS SHALL BE PERFORMED IN ACCORDANCE WITH THE PLANS, SPECIFICATION, AND SPECIAL PROVISIONS OR AS DIRECTED BY THE ENGINEER.
23. AS REQUIRED BY THE CITY ENGINEER, THE CONTRACTOR SHALL FURNISH AND OPERATE A SELF-LOADING MOTOR SWEEPER WITH SPRAY NOZZLES AT LEAST TWICE EACH WORKING DAY TO KEEP PAVED AREAS ACCEPTABLY CLEAN WHEREVER CONSTRUCTION, INCLUDING RESTORATION, IS INCOMPLETE.
24. ALL PORTLAND CEMENT CONCRETE (P.C.C.) AND ASPHALTIC CONCRETE (A.C.) SHALL BE REMOVED TO A SAWCUT.
25. ALL P.C.C. AND A.C. REMOVALS SHALL BE OUTLINED TO NECESSARY WORKING LIMITS AND SAWCUT TO A MINIMUM DEPTH OF 2 INCHES PRIOR TO REMOVAL. UNLESS OTHERWISE STATED IN THE SPECIAL PROVISIONS, ALL DEBRIS CREATED BY THE REMOVAL OPERATIONS SHALL BECOME THE PROPERTY OF THE CONTRACTOR AND SHALL BE DISPOSED OF, THE SAME WORK DAY, AWAY FROM THE JOB SITE IN A MANNER AND AT A LOCATIONS ACCEPTABLE TO ALL AGENCIES AFFECTED BY THE WORK.
26. IN ALL OPERATIONS, THE REQUIREMENTS OF THE STATE DIVISION OF INDUSTRIAL SAFETY FOR TRENCHES, EXCAVATIONS, AND SHORING SHALL APPLY. SAFETY OF WORKERS OF THE PUBLIC, INCLUDING IMPROPER TRAFFIC CONTROL, SHALL CAUSE THE SUSPENSION OF WORK UNTIL CORRECTIONS ARE MADE.
27. HARD HATS AND HIGH VISIBILITY ORANGE VEST SHALL BE WORN AT ALL TIMES WHEN WORKING ON THE PROJECT.
28. FAILURE TO COMPLY WITH ANY OF THE ABOVE ITEMS SHALL BE SUFFICIENT CAUSE FOR THE AGENCY TO ARRANGE FOR THE NECESSARY WORK TO BE PERFORMED BY OTHERS. ANY COSTS INCURRED TO COMPLETE THE NECESSARY WORK WILL BE CHARGED TO THE CONTRACTOR.

NORTH
N.T.S.

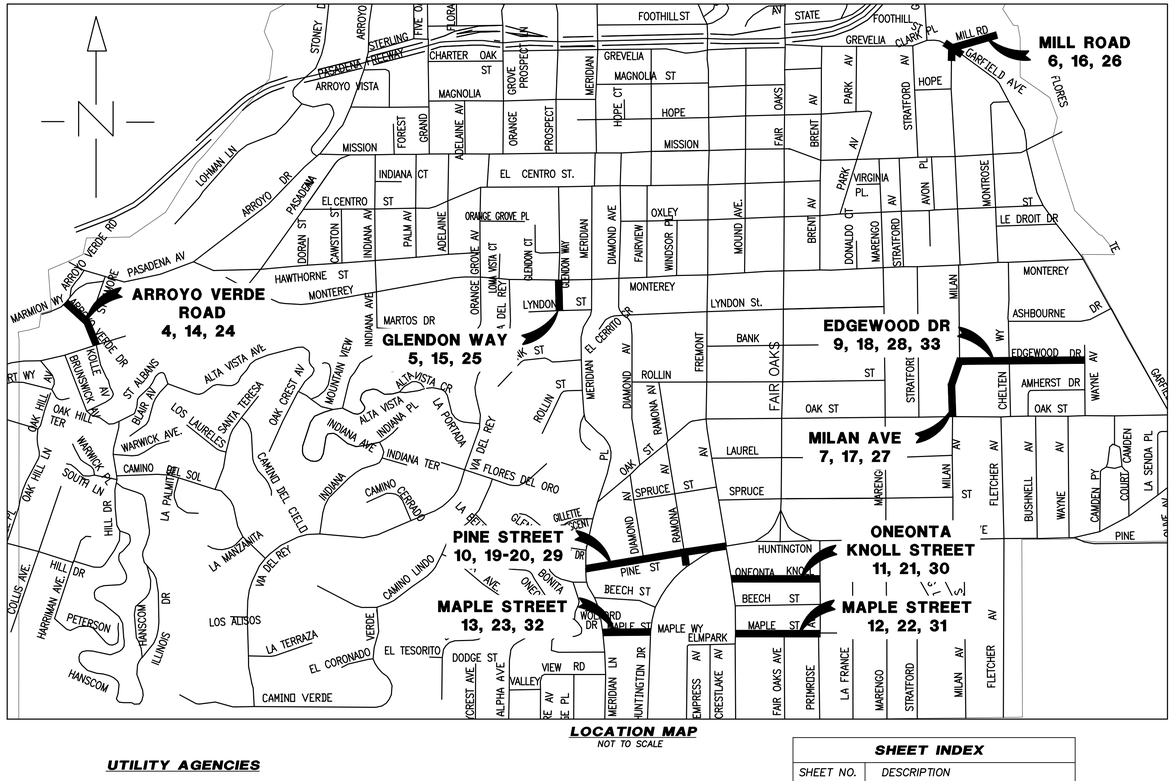

LOCATION MAP
NOT TO SCALE

UTILITY AGENCIES

OWNER
CITY OF SOUTH PASADENA
1414 MISSION STREET
SOUTH PASADENA, CA 91030
TEL: (626) 403-7200

ELECTRICITY
SO. CAL. EDISON CO.
TEL: (626) 303-8405
CONTACT: EDDIE LOPEZ

TELEPHONE
AT&T
271 NORTH COMMERCE AVENUE
PASADENA, CA 91101-3641
TEL: (626) 356-6267
CONTACT: VICTOR HUERTA

GAS
SOUTHERN CALIFORNIA GAS
1919 S. STATE COLLEGE BLVD
ANAHEIM, CA 92806
TEL: (714) 634-3079
CONTACT: ISMAEL AYALA

CABLE TELEVISION
CHARTER COMMUNICATIONS
1401 E. ROUTE 66
GLENDORA, CA 91740
TEL: (626) 639-1622
CONTACT: DAVID SCHARRER

SHEET INDEX	
SHEET NO.	DESCRIPTION
1	TITLE SHEET
2	NOTES AND DETAILS
3	INDEX MAP
4 – 13	STREET IMPROVEMENT PLANS
14 – 23	WATER IMPROVEMENT PLANS
24 – 32	STRIPING PLANS
33	SEWER PLAN

STRIPING GENERAL NOTES

1. ALL CAT-TRACK LAYOUTS MUST BE INSPECTED BY THE ENGINEER OR INSPECTOR IN THE FIELD BEFORE STRIPING BEGINS. CONTACT PUBLIC WORKS ENGINEER OR INSPECTOR 72 HOURS BEFORE CATTRACKING TO SCHEDULE INSPECTION. CITY REVIEW OF CATTRACKING DOES NOT RELEASE LIABILITY OF THE CONTRACTOR TO INSTALL FINAL STRIPING PER APPROVED PLANS.
2. ALL LANE STRIPING AT INTERSECTION APPROACHES WITHOUT CROSSWALK OR LIMIT LINES SHALL END 10' FROM THE EXTENSION OF THE INTERSECTION CURB LINE.
3. ALL STENCILS USED TO INSTALL THE PAVEMENT LEGENDS MUST CONFORM TO THE LATEST CALTRANS STANDARD PLANS.
4. ANY EXISTING STRIPING OR PAVEMENT LEGENDS WHICH CONFLICT WITH THE APPROVED STRIPING PLAN SHALL BE REMOVED BY WET SANDBLASTING. NO BLACKOUT WILL BE ALLOWED.
5. REFLECTIVE PAVEMENT MARKERS SHALL BE INSTALLED ON ALL FINAL STRIPING CONFIGURATIONS PER THE APPROVED STRIPING CONFIGURATIONS PER THE APPROVED STRIPING PLAN IN ACCORDANCE WITH THE DESIGNATED CALTRANS STRIPING DETAIL. ALL EXISTING RPM'S MUST BE REMOVED. EXISTING RPM'S SHALL NOT BE REUSED. STRIPING DETAILS REQUIRES NEW RPM'S TO BE INSTALLED.
6. REFLECTIVE BLUE PAVEMENT MARKERS SHALL BE INSTALLED AT EACH FIRE HYDRANT.
7. ALL STRIPING AND MARKINGS SHALL BE INSTALLED, RELOCATED, OR REMOVED BY THE CONTRACTOR.
8. ALL NECESSARY STRIPING SHALL BE LOCATED PRIOR TO POSITIONING NEW DETECTOR LOOPS. LOOP LAYOUTS SHALL BE INSPECTED AND APPROVED PRIOR TO INSTALLATION.
9. CONTRACTOR SHALL REPAINT ALL EXISTING RED CURB LOCATIONS WITHIN THE PROJECT LIMITS. EXISTING RED CURBS NEAR INTERSECTION APPROACHES SHALL BE REPAINTED AT A LENGTH OF 15'-20'. IF EXISTING RED CURB IS LESS THAN 15' LONG, THE RED CURB SHALL BE EXTENDED TO A MINIMUM LENGTH OF 15'-20' (20' PREFERRED).
10. LANE WIDTHS SHALL BE MEASURED BETWEEN THE CENTER LINES OF EACH ADJACENT SINGLE OR DOUBLE STRIPE OR TOP OF CURB AS APPROPRIATE.
11. ALL ARROWS SHALL BE TYPE IV (L AND R) PER CALTRANS STANDARD PLANS AND STANDARD SPECIFICATIONS UNLESS OTHERWISE SPECIFIED.
12. ALL LANE LINES AT INTERSECTION APPROACHES SHALL BEGIN AND END WITH 50 FEET OF 4-INCH SOLID WHITE LINE.
13. ALL STRIPING AND MARKINGS SHALL BE THERMOPLASTIC.

UNAUTHORIZED CHANGES AND USES

CAUTION: THE ENGINEER PREPARING THESE PLANS WILL NOT BE RESPONSIBLE FOR, OR LIABLE FOR, UNAUTHORIZED CHANGES TO OR USES OF THESE PLANS.

NOTES

ALL CONTRACTORS AND SUBCONTRACTORS PERFORMING WORK SHOWN ON OR RELATED TO THESE PLANS SHALL CONDUCT THEIR OPERATIONS SO THAT ALL EMPLOYEES ARE PROVIDED A SAFE PLACE TO WORK AND THE PUBLIC IS PROTECTED. ALL CONTRACTORS AND SUBCONTRACTORS SHALL COMPLY WITH THE "OCCUPATIONAL SAFETY AND HEALTH REGULATIONS" OF THE U.S. DEPARTMENT OF LABOR, AND WITH THE STATE OF CALIFORNIA DEPARTMENT OF INDUSTRIAL RELATIONS' "CONSTRUCTION SAFETY ORDERS".

THE CIVIL ENGINEER SHALL NOT BE RESPONSIBLE IN ANY WAY FOR THE CONTRACTORS' AND SUBCONTRACTORS' COMPLIANCE WITH THE "OCCUPATIONAL SAFETY AND HEALTH REGULATIONS" OF THE U.S. DEPARTMENT OF LABOR OR WITH THE STATE OF CALIFORNIA DEPARTMENT OF INDUSTRIAL RELATIONS' "CONSTRUCTION SAFETY ORDERS".

THE LAND SURVEYORS ACT, SECTION 8771 OF THE BUSINESS & PROFESSIONAL CODE, AND SECTIONS 732.05, 1492-5, 1810-5 OF THE STREETS AND HIGHWAY CODE REQUIRE THAT SURVEY MONUMENTS SHALL BE PROTECTED AND PERPETUATED.

CONCRETE REMOVAL NOTES

WHERE REINFORCEMENT IS REQUIRED TO EXTEND THROUGH THE NEW JOINT, CONCRETE SHALL BE REMOVED IN THE FOLLOWING SEQUENCE:

1. A SAW CUT SHALL BE MADE ONE AND ONE-HALF INCHES DEEP AT THE REMOVAL LIMITS. CARE SHALL BE EXERCISED IN SAWING AT THE REMOVAL LIMITS SO AS NOT TO CUT THE REINFORCING STEEL IN THE REMAINING SLAB. THE EXISTING REINFORCING STEEL SHALL BE RETAINED AND EXTENDED INTO THE NEW CONSTRUCTION AS INDICATED ON THE PLANS.
2. USING HANDHELD EQUIPMENT, THE CONCRETE SHALL BE CAREFULLY REMOVED FOR THE FULL DEPTH OF THE WALL OR SLAB AND FOR A MINIMUM DISTANCE FROM THE SAWCUT EQUAL TO THE LONGEST EXTENSION OF THE EXISTING BARS TO BE EXTENDED INTO THE NEW CONSTRUCTION. THIS EXTENSION SHALL BE 30 BAR DIAMETERS, UNLESS OTHERWISE SHOWN.
3. EXISTING REINFORCEMENT SHALL BE CUT TO THE REQUIRED BAR EXTENSION.
4. THE REMAINING CONCRETE MAY BE REMOVED BY ANY SUITABLE METHOD UPON APPROVAL OF THE ENGINEER, WHO SHALL BE THE SOLE JUDGE OF THE USE OF ANY CONCRETE REMOVAL EQUIPMENT. EXPLOSIVES, WRECKING BALL, OR OTHER SIMILAR DEVICES, WHICH ARE LIKELY TO DAMAGE THE CONCRETE TO BE LEFT IN PLACE, SHALL NOT BE USED.

SURVEY NOTE

IT SHALL BE THE RESPONSIBILITY OF THE CONTRACTOR TO SUPPLY ANY AND ALL CONSTRUCTION SURVEYING AND STAKING AS REQUIRED. CONTRACTOR IS ALSO RESPONSIBLE FOR PRESERVATION AND/OR PERPETUATION OF ALL EXISTING MONUMENTS WHICH CONTROL SUBDIVISIONS, TRACTS, BOUNDARIES, STREETS, HIGHWAYS, OR OTHER RIGHTS-OF WAY, EASEMENTS, OR PROVIDE SURVEY CONTROL WHICH WILL BE DISTURBED OR REMOVED DUE TO CONTRACTOR'S WORK. CONTRACTOR SHALL PROVIDE A MINIMUM OF 10 WORKING DAYS' NOTICE TO THE ENGINEER PRIOR TO DISTURBANCE OR REMOVAL OF EXISTING MONUMENTS, AND SHALL PROVIDE PERMANENT WITNESS MONUMENTS AND FILE THE REQUIRED DOCUMENTATION WITH THE COUNTY SURVEYOR IN CONFORMANCE WITH BUSINESS AND PROFESSIONS CODE SECTION 8771.

PRIOR TO START OF ANY CONSTRUCTION THE CONTRACTOR'S SURVEYOR SHALL SEND A FORMAL CORRESPONDENCE TO THE ENGINEER, SIGNED AND STAMPED, THAT HE/SHE HAS INSPECTED THE SITE AND DESCRIBE ALL THE FOUND ITEMS AND CERTIFY THAT THEY HAVE BEEN TIED.

WATER LEGEND

- RESILIENT SEAT GATE VALVE
- REDUCER
- BLIND FLANGE
- STANDARD F.H. (PVC PIPE) 6"xONE 2-1/2"xONE 4" OUTLET
- WATER MAIN LINE
- 1" WATER LATERAL
- SURVEY TAGS AND MONUMENTS

Know what's Call before you dig. 811

BASIS OF BEARING:
THE BEARINGS AND COORDINATES HEREON ARE BASED ON THE CALIFORNIA COORDINATE SYSTEM OF 1983 (NAD83), ZONE 5 DATUM, BASED LOCALLY ON A LINE BETWEEN NGS CONTROL POINTS EV3794 AND EV3841, BEING N84°35'29"W, 1991.35 EPOCH.

BENCHMARK:
LOS ANGELES COUNTY PUBLIC WORKS BENCH MARK NO. 1G4120.
DESCRIPTION: (SBM MON IN S. END C.B. 5FT N/O BCR @ NE COR. SAN GABRIEL BLVD & HUNTINGTON DR MKD (BM 10-5A 1966).
ELEVATION = 601.950

Δ	DATE	DESCRIPTION	APP'D	DATE

REVISIONS

CITY OF SOUTH PASADENA

APPROVED BY: _____ DATE

REGISTERED PROFESSIONAL ENGINEER
KURT R. PEDERSEN
NO. 69745
CIVIL
STATE OF CALIFORNIA

RKA CONSULTING GROUP
398 S. LEMON CREEK DRIVE - SUITE E-WALNUT, CA 91789
(909) 594-9702 - FAX (909) 594-2658
WWW.RKAGROUP.COM

KURT R. PEDERSEN RCE 69745 5-13-25 DATE

CITY OF SOUTH PASADENA
FY2019-20 STREET & WATER IMP.
TITLE SHEET
STREET & WATER IMPROVEMENT PROJECT

SHEET 1 OF 33 SHEETS

REVIEWED BY: KRP
DRAWN BY:
DESIGNED BY:
JOB NO.: 323007
DRAWING NAME: \\CAD\323007\DWG\LSTR01.DWG
PLAN SET: FY19-20 STREET IMPROVEMENT PROJECT
LATEST MYLAR REVISION DATE: X
DRAWING LAST UPDATED: 2021-1-21
MYLAR PLOT DATE: X

WATERLINE IMPROVEMENTS

1. THE CONTRACTOR SHALL PROVIDE THE CITY ENGINEER WRITTEN NOTICE AS TO PROPOSED TIME OF CONNECTION TO THE EXISTING CITY OF SOUTH PASADENA WATER PIPELINE. UNINTERRUPTED SERVICE SHALL BE PROVIDED TO THE CUSTOMER EXCEPT IN INSTANCES SPECIFICALLY APPROVED BY THE CITY ENGINEER. SAID NOTICE SHALL OUTLINE THE SEQUENCE OF WORK REQUIRED TO MAKE CONNECTION, VERIFY ALL AFFECTED WATER USERS AND ESTIMATE THE DURATION OF ANY PROPOSED SHUTDOWN TIME. SPECIFIC APPROVAL OF THE CITY ENGINEER SHALL BE REQUIRED PRIOR TO ANY SHUTDOWN. 24-HOUR WRITTEN NOTICE SHALL BE PROVIDED BY THE CONTRACTOR TO ALL AFFECTED CONSUMERS. THE CONTRACTOR SHALL NOTIFY THE WATER DIVISION 48 HOURS PRIOR TO STARTING ANY WORK. THE CONNECTION TO EXISTING CITY WATER LINE SHALL BE SUPERVISED BY THE WATER DIVISION INSPECTOR.
2. STANDARD DETAILS ARE SHOWN IN THE CONTRACT SPECIFICATIONS.
3. THE CONTRACTOR MAY VARY THE GRADE AND ALIGNMENT OF THE WATER LINE IF FIELD CONDITION WARRANT WITH APPROVAL OF THE CITY ENGINEER.
4. PIPE SHALL BE CL 350, D.I., WITH TYTON PUSH-ON JOINTS. INSTALL TYTON FIELD LOK 350 GASKETS WHERE THE SEPARATION OF THE WATER MAIN AND SEWER MAIN IS LESS THAN 10'.
5. ALL FITTINGS SHALL BE AWWA C 153 MJ JOINTS, UNLESS OTHERWISE NOTED OR DIRECTED BY THE CITY ENGINEER. ALL DUCTILE IRON CROSSES, TEES, AND REDUCERS SHALL HAVE FLANGED ENDS UNLESS OTHERWISE SHOWN ON THE CONSTRUCTION DRAWINGS.
6. CONTRACTOR SHALL FURNISH ALL FITTINGS NECESSARY FOR DEVIATION OF PIPE ALIGNMENT NOT SHOWN ON PLANS.
7. ALL VALVES CONNECTING TO TEES, CROSSES, AND REDUCERS SHALL HAVE FLANGED OR FLANGED X PUSH-ON ENDS.
8. RESTRAINING DEVICES SHALL BE INSTALLED IN LOCATIONS DETERMINED IN THE FIELD BY THE CITY ENGINEER AND PER THE CONTRACT SPECIFICATIONS. THRUST BLOCKS SHALL BE INSTALLED ONLY IN LOCATIONS SPECIFICALLY APPROVED BY THE CITY ENGINEER, CONCRETE THRUST BLOCKS SHALL BE PER LACWD STD. PLAN W-21. FOR D.I. PIPE.
9. SEWER LATERALS ARE ASSUMED TO HAVE A MINIMUM OF 4'-6' COVER. THE CONTRACTOR SHALL VERIFY IN THE FIELD. LATERALS FOUND TO INTERFERE SHALL BE RELOCATED PER S.P.P.W.C. STD. DWG. NO. 223-3 OR AS DIRECTED BY THE CITY ENGINEER.
10. WHEREVER A WATER LINE CROSSES A SEWER LINE MAIN, SEPARATION SHALL NOT BE LESS THAN 4 INCHES. WHERE THE SEPARATION IS BETWEEN 4 INCHES AND ONE FOOT, THE CONTRACTOR SHALL INSTALL THE WATER MAIN SO THAT A 20 FOOT SECTION OF PIPE IS CENTERED AT THE SEWER LINE, AND THERE SHALL NOT BE A PIPE JOINT WITHIN 10 FEET.
11. THE OPEN ENDS OF ALL ABANDONED WATER LINES SHALL BE PLUGGED WITH CONCRETE PER DETAIL "A" ON SHEET 2. THE LOCATION OF THE CONCRETE PLUGS SHALL BE APPROVED BY THE CITY ENGINEER IN THE FIELD.
12. ALL DRAINING OF EXISTING WATER MAINS AT TIE-INS SHALL BE THE RESPONSIBILITY OF THE CONTRACTOR.
13. ALL WATER LINE INSTALLATIONS SHALL BE CHLORINATED IN ACCORDANCE WITH THE STATE OF CALIFORNIA HEALTH DEPARTMENT, CONSISTING OF NOT LESS THAN 50 PPM INITIAL DOSAGE WITH NOT LESS THAN 25 PPM RESIDUAL DOSAGE AFTER 24 HOURS. INSTALLATIONS SHALL BE FLUSHED AND A 48-HOUR BAC-T TEST SHALL BE REQUIRED PRIOR TO PRESSURE TESTING. ALL TESTING AND TESTING METHODS SHALL BE APPROVED BY THE CITY ENGINEER.
14. ALL BACTI AND PRESSURE TESTS SHALL BE APPROVED BY THE CITY ENGINEER PRIOR TO PLACEMENT OF PERMANENT RESURFACING.
15. ALL EXCAVATIONS FOR THE INSTALLATION OF MAIN LINE PIPE AND SERVICES, INSTALLATION OF COMBINATION AIR VACUUM AND AIR RELEASE VALVES, INSTALLATION OF END OF LINE FLUSH-OUTS, AND ABANDONMENT OF EXISTING WATER MAINS SHALL BE BACKFILLED WITH A SAND SLURRY MIX. SLURRY SHALL BE USED WITHIN THE PARKWAY UP TO 4" BELOW THE FINISHED SURFACE
16. COVER OVER TOP OF PIPE SHALL BE 36" MIN. MEASURED FROM FINISHED SURFACE UNLESS SHOWN OTHERWISE ON THE PLANS. SEE OVER AND UNDERCROSSING DETAIL ON SHEET 2.
17. ANY CONCRETE CURB, GUTTER, SIDEWALK OR LANDSCAPING REQUIRED REMOVAL FOR WATER MAIN INSTALLATION OR SERVICE CONNECTION SHALL BE REPLACED IN KIND AND SHALL BE APPROVED BY THE CITY ENGINEER.
18. THE CONTRACTOR SHALL ADJUST ALL VALVES SLEEVES TO FINISHED GRADE UPON COMPLETION OF REPAVING. ALL NEW ASSEMBLIES SHALL HAVE BOX AND COVERS INSTALLED TO FINISHED GRADE.
19. IN AREAS WHERE THE PIPELINE IS INSTALLED ABOVE AN EXISTING STORM DRAIN, THE CONTRACTOR SHALL MAINTAIN A MINIMUM VERTICAL CLEARANCE OF 12-INCH BETWEEN THE TOP OF STORM DRAIN AND THE BOTTOM OF THE PIPELINE. IF 12-INCH CLEARANCE CANNOT BE MAINTAINED, PIPE SHALL BE CONCRETE ENCASED ACROSS STORM DRAIN, PLUS 3-FEET ON BOTH SIDES.
20. TRAFFIC STRIPING, MARKINGS, AND RAISED PAVEMENT MARKERS DAMAGED DURING CONSTRUCTION SHALL BE REINSTALLED AS DIRECTED BY THE CITY ENGINEER AND NOTED IN THE SPECIAL PROVISIONS. ALL NEW STRIPING AND MARKINGS SHALL BE THERMOPLASTIC UNLESS APPROVED OTHERWISE BY THE CITY ENGINEER.
21. THE CONTRACTOR SHALL POTHOLE UTILITIES AS REQUIRED BY THE CITY ENGINEER AND THESE PLANS PRIOR TO CONSTRUCTION, AND SHALL NOTIFY THE ENGINEER AND OWNER OF ANY CONFLICTS.
22. NO VALVE SHALL BE LOCATED WITHIN A GUTTER OR OTHER CONCRETE DRAINAGE DEVICE, ALLEY GUTTERS, DRIVEWAY AND ALLEY APPROACHES OR SIDEWALKS, UNLESS OTHERWISE SPECIFICALLY APPROVED BY THE CITY ENGINEER.
23. THE CITY ENGINEER SHALL IDENTIFY WHICH METER BOXES ARE TO BE REPLACED BY THE CONTRACTOR.

PRIVATE ENGINEER'S NOTICE TO CONTRACTORS

THE EXISTENCE AND LOCATION OF ANY UNDERGROUND UTILITY PIPES, CONDUITS OR STRUCTURES SHOWN ON THESE PLANS ARE OBTAINED BY A SEARCH OF AVAILABLE RECORDS. TO THE BEST OF OUR KNOWLEDGE THERE ARE NO EXISTING UTILITIES EXCEPT AS SHOWN ON THESE PLANS. THE CONTRACTOR IS REQUIRED TO TAKE DUE PRECAUTIONARY MEASURES TO PROTECT THE UTILITIES SHOWN AND ANY OTHER LINES OR STRUCTURES NOT SHOWN ON THESE PLANS.

CONTRACTOR FURTHER AGREES THAT HE SHALL ASSUME SOLE AND COMPLETE RESPONSIBILITY FOR JOB SITE CONDITIONS DURING THE COURSE OF CONSTRUCTION OF THIS PROJECT, INCLUDING SAFETY OF ALL PERSONS AND PROPERTY; THAT THIS REQUIREMENT SHALL APPLY CONTINUOUSLY AND NOT BE LIMITED TO NORMAL WORKING HOURS; AND THAT THE CONTRACTOR SHALL DEFEND, INDEMNIFY AND HOLD THE LOCAL GOVERNMENT AGENCIES, THE OWNER AND THE ENGINEER HARMLESS FROM ANY AND ALL LIABILITY, REAL OR ALLEGED, IN CONNECTION WITH THE PER- FORMANCE OF WORK ON THIS PROJECT, EXCEPTING FOR LIABILITY ARISING FROM THE SOLE NEGLIGENCE OF THE OWNER OR ENGINEER.

NPDES NOTES

1. ERODED SEDIMENTS AND OTHER POLLUTANTS MUST BE RETAINED ON SITE AND MAY NOT BE TRANSPORTED FROM THE SITE VIA SHEET FLOW, SWALES, AREA DRAINS, NATURAL DRAINAGE COURSES, OR WIND.
2. STOCKPILES OF EARTH AND OTHER CONSTRUCTION RELATED MATERIALS MUST BE PROTECTED FROM BEING TRANSPORTED FROM THE SITE BY THE FORCES OF WIND OR WATER.
3. FUELS, OILS, SOLVENTS, AND OTHER TOXIC MATERIALS MUST BE STORED IN ACCORDANCE WITH THEIR LISTING AND ARE NOT TO CONTAMINATE THE SOIL AND SURFACE WATERS. ALL APPROVED STORAGE CONTAINERS ARE TO BE PROTECTED FROM THE WEATHER. SPILLS MUST BE CLEANED UP IMMEDIATELY AND DISPOSED OF IN A PROPER MANNER. SPILLS MAY NOT BE WASHED INTO THE DRAINAGE SYSTEM.
4. EXCESS OR WASTE CONCRETE MAY NOT BE WASHED INTO THE PUBLIC WAY OR ANY OTHER DRAINAGE SYSTEM. PROVISIONS SHALL BE MADE TO RETAIN CONCRETE WASTES ON SITE UNTIL THEY CAN BE DISPOSED OF AS SOLID WASTE.
5. TRASH AND CONSTRUCTION RELATED SOLID WASTES MUST BE DEPOSITED INTO A COVERED RECEPTACLE TO PREVENT CONTAMINATION OF RAINWATER AND DISPERSAL BY WIND.
6. SEDIMENTS AND OTHER MATERIALS MAY NOT BE TRACKED FROM THE SITE BY VEHICLE TRAFFIC. THE CONSTRUCTION ENTRANCE ROADWAYS MUST BE STABILIZED SO AS TO INHIBIT SEDIMENTS FROM BEING DEPOSITED INTO THE PUBLIC WAY. ACCIDENTAL DEPOSITIONS MUST BE SWEPT UP IMMEDIATELY AND MAY NOT BE WASHED DOWN BY RAIN OR OTHER MEANS.
7. ANY SLOPES WITH DISTURBED SOILS OR DENUDED OF VEGETATION MUST BE STABILIZED SO AS TO INHIBIT EROSION BY WIND AND WATER.
8. THE FOLLOWING BMP'S FROM THE CALIFORNIA STORMWATER QUALITY ASSOCIATION (CASQA) CONSTRUCTION BEST MANAGEMENT PRACTICE (BMP) HANDBOOK WEB PORTAL (WWW.CASQA.ORG) MUST BE IMPLEMENTED FOR ALL CONSTRUCTION ACTIVITIES AS APPLICABLE. (ADDITIONAL MEASURES MAY BE REQUIRED IF DEEMED APPROPRIATE BY CITY INSPECTOR.

EROSION CONTROL BMPS

EC-1 SCHEDULING
EC-2 PRESERVATION OF EXISTING VEGETATION
EC-3 HYDRAULIC MULCH
EC-4 HYDROSEEDING
EC-5 SOIL BINDERS
EC-6 STRAW MULCH
EC-7 GEOTEXTILES & MATS
EC-8 WOOD MULCHING
EC-9 EARTH DIKES AND DRAINAGE SWALES
EC-10 VELOCITY DISSIPATION DEVICES
EC-11 SLOPE DRAINS
EC-12 STREAMBANK STABILIZATION
EC-13 POLYACRYLAMIDE

TEMPORARY SEDIMENT CONTROL BMPS

SE-1 SILT FENCE
SE-2 SEDIMENT BASIN
SE-3 SEDIMENT TRAP
SE-4 CHECK DAMS
SE-5 FIBER ROLLS
SE-6 GRAVEL BAG BERM
SE-7 STREET SWEEPING AND VACUUMING
SE-8 SANDBAG BARRIER
SE-9 STRAW BALE BARRIER
SE-10 STORM DRAIN INLET PROTECTION

TEMPORARY TRACKING CONTROL BMPS

TC-1 STABILIZED CONSTRUCTION ENTRANCE
TC-2 STABILIZED CONSTRUCTION ROADWAY
TC-3 ENTRANCE/OUTLET TIRE WASH

NON-STORMWATER MANAGEMENT BMPS

NS-1 WATER CONSERVATION PRACTICES
NS-2 DEWATERING OPERATIONS
NS-3 PAVING AND GRINDING OPERATIONS
NS-4 TEMPORARY STREAM CROSSING
NS-5 CLEAR WATER DIVERSION
NS-6 ILLICIT CONNECTION/DISCHARGE
NS-7 POTABLE WATER/IRRIGATION
NS-8 VEHICLE AND EQUIPMENT CLEANING
NS-9 VEHICLE AND EQUIPMENT FUELING
NS-10 [illegible]
NS-11 PILE DRIVING OPERATIONS
NS-12 CONCRETE CURING
NS-13 CONCRETE FINISHING
NS-14 MATERIAL AND EQUIPMENT USE
NS-15 DEMOLITION ADJACENT TO WATER
NS-16 TEMPORARY BATCH PLANTS

WASTE MANAGEMENT & MATERIALS POLLUTION CONTROL BMPS

WM-1 MATERIAL DELIVERY AND STORAGE
WM-2 MATERIAL USE
WM-3 STOCKPILE MANAGEMENT
WM-4 SPILL PREVENTION AND CONTROL
WM-5 SOLID WASTE MANAGEMENT
WM-6 HAZARDOUS WASTE MANAGEMENT
WM-7 CONTAMINATED SOIL MANAGEMENT
WM-8 CONCRETE WASTE MANAGEMENT
WM-9 SANITARY/SEPTIC WASTE MANAGEMENT
WM-10 LIQUID WASTE MANAGEMENT

LEGEND

G.B.	=	GRADE BREAK	TOP	=	TOP OF SLOPE
H.P.	=	HIGH POINT	TC	=	TOP OF CURB
E.P.	=	EDGE OF PAVEMENT	OC	=	ON CURVE
W.V.	=	WATER VALVE	MOC	=	MIDDLE OF CURVE
W	=	WATER MAIN	BC	=	BEG. OF CURVE
W.M.	=	WATER METER	EC	=	END OF CURVE
FL	=	FLOW LINE	BCR	=	BEGINNING OF CURB RETURN
X-ING	=	CROSSING	ECR	=	END OF CURB RETURN
INV.	=	INVERT ELEVATION	AP	=	ANGLE POINT
A.C.	=	ASPHALT CONCRETE	TYP.	=	TYPICAL
B.W.	=	BACK OF WALK	TG	=	TOP OF GRATE
BVC	=	BEG. VERT. CURVE	CF	=	CURB FACE
EVC	=	END VERT. CURVE	SD	=	STORM DRAIN
ESMT.	=	EASEMENT	EG	=	EDGE OF GUTTER
MB	=	MAILBOX	PP	=	POWER POLE
TW	=	TOP OF WALL	CLF	=	CHAIN LINK FENCE
BW	=	BOTTOM OF WALL	R/W	=	RIGHT-OF-WAY
(106.02)	=	EXIST. ELEVATION	℄	=	PROPERTY LINE
106.02	=	PROPOSED ELEVATION	℄	=	CENTERLINE
FG	=	FINISHED GRADE	L.F.	=	LINEAR FOOT
FS	=	FINISHED SURFACE	SEW.	=	SEWER
TOE	=	TOE OF SLOPE	LS	=	LANDSCAPING
			PRV	=	PRESSURE REDUCER VALVE
			DBC	=	DOUBLE DETECTOR CHECK

NOTE:
HORIZONTAL AND VERTICAL LOCATIONS TO BE VERIFIED IN THE FIELD AND ENGINEER NOTIFIED OF ANY DISCREPANCIES PRIOR TO CONSTRUCTION.

CONSTRUCTION NOTES & QUANTITY ESTIMATE

THE QUANTITIES SHOWN HEREON ARE ESTIMATES ONLY. THE CONTRACTORS SHALL PREPARE THEIR OWN QUANTITIES AND BID A COMPLETE JOB.

STREET IMPROVEMENTS

(1) PROTECT IN PLACE.
(2) ADJUST VALVE CAN AND LID TO FINISHED SURFACE.
(3) ADJUST EXISTING MANHOLE AND COVER TO FINISHED SURFACE.
(4) ADJUST EXISTING PULLBOX AND COVER TO FINISHED SURFACE.
(9) INSTALL GLUE DOWN DETECTABLE WARNING SURFACE. BOLT DOWN AT CORNERS.
(10) SAWCUT AND REMOVE EXISTING P.C.C. SIDEWALK AND CURB & GUTTER. CONSTRUCT PCC CURB RAMP PER SPPWC 111-5, CASE AND TYPE PER PLAN. INCLUDES 2' MINIMUM FULL DEPTH AC REPLACEMENT. INCREASE AS NECESSARY TO PROVIDE 4'X4', 5% MAXIMUM SLOPE ON BOTTOM.
(11) SAWCUT AND REMOVE EXISTING P.C.C. SIDEWALK. CONSTRUCT DRIVEWAY PER SPPWC 110-2, TYPE PER PLAN.
(12) SAWCUT AND REMOVE EXISTING P.C.C. SIDEWALK. CONSTRUCT 4" THICK P.C.C. SIDEWALK PER SPPWC 112-2 & 113-2.
(13) SAWCUT AND REMOVE P.C.C. CURB AND GUTTER. CONSTRUCT 8" CURB AND 24" GUTTER PER SPPWC STD. PLAN 120-3.
(16) SAWCUT AND REMOVE EXISTING EXISTING PCC CROSS GUTTER. CONSTRUCT CROSS GUTTER PER SPPWC STD. PLAN 122-3. INCLUDES 2' FULL DEPTH AC REPLACEMENT.
(17) SAWCUT AND REMOVE EXISTING EXISTING PCC CURB. CONSTRUCT 6" CURB PER SPPWC STD. PLAN 120-3. INCLUDES 2' FULL DEPTH AC REPLACEMENT.
(18) COLD MILL EXISTING PAVEMENT TO A DEPTH OF 2".
(21) CONSTRUCT 2" AC OVERLAY, C2.
(23) REMOVE EXISTING PCC AND AC, CONSTRUCT ALLEY INTERSECTION PER SPPWC STD. PLAN 130-2. INCLUDES 2' FULL DEPTH AC REPLACEMENT.
(24) REMOVE TREE ROOTS PER CITY ARBORIST'S DIRECTION.
(25) SAWCUT AND REMOVE EXISTING AC AND SUBGRADE. CONSTRUCT 6" FULL-DEPTH AC REPAIR.
(26) SAWCUT AND REMOVE EXISTING PCC CURB AND GUTTER. CONSTRUCT 8" CURB AND 30" GUTTER PER SPPWC STD. PLAN 120-3.
(27) SAWCUT AND REMOVE EXISTING PCC LOCAL DEPRESSION PER SPPWC STD. PLAN 313-4, MODIFIED TO MATCH EXISTING.
(28) REPLACE CURB DRAIN PER SPPWC 150-4.
(29) REMOVE EXISTING MACADAM AND SUBGRADE.
(31) REMOVE EXISTING AC.
(32) CONSTRUCT 4" AC PAVEMENT (2.5" B, 1.5" C2)
(33) SAWCUT AND REMOVE EXISTING PCC CURB AND GUTTER, CONSTRUCT 6" PCC CURB AND 30" GUTTER PER SPPWC STD. PLAN 120-3. INCLUDES 2' DEPTH AC REPAIR.
(34) SAWCUT AND REMOVE EXISTING CURB. CONSTRUCT 8" PCC CURB AND 24" GUTTER PER SPPWC STD. PLAN 120-3.
(35) SAWCUT AND REMOVE EXISTING CURB AND GUTTER CONSTRUCT 8" PCC CURB AND 36" GUTTER PER SPPWC STD. PLAN 120-3.
(36) COLD MILL TO A DEPTH OF 1.5".
(37) CONSTRUCT 1.5" AC OVERLAY, C2.
(38) SAWCUT AND REMOVE EXISTING PCC ROLLED CURB. CONTRUCT PCC ROLLED CURB TO TO MATCH IN-KIND.
(39) CONSTRUCT ONE STEP. MATCH STEP HEIGHT OF EXISTING STEPS.
(40) SAWCUT AND REMOVE EXISTING PCC CURB AND GUTTER. CONSTRUCT 10" CURB AND 24" GUTTER PER SPPWC STD. PLAN 120-3.
(41) SALVAGE EXISTING HPS COBRA HEAD AND INSTALL NEW LED COBRA HEAD ASSEMBLY.
(42) SALVAGE EXISTING LUMINAIRE AND INSTALL NEW DECORATIVE LED LUMINAIRE.
(43) SAWCUT AND REMOVE EXISTING CURB RAMP, CURB AND GUTTER, AND SIDEWALK. CONSTRUCT CUSTOM RAMP, CURB AND GUTTER, AND SIDEWALK PER DETAIL ON SHEET 4.
(47) SAWCUT AND REMOVE EXISTING GUTTER. CONSTRUCT 30" GUTTER PER SPPWC STD. PLAN 120-3.
(48) CONSTRUCT 3" CMB.
(49) REMOVE SUBGRADE (UNCLASSIFIED EXCAVATION).
(50) REMOVE AND REPLACE 8" VCP SEWER
(51) REMOVE AND REPLACE ALL LENSES.
(52) REMOVE LOOSE AND FLAKING COATINGS, LOOSE AND FLAKING RUST, AND OTHER FOREIGN SURFACE CONTAMINANTS. SAND AND REPAINT POLE.
(53) STRIP ENTIRE POLE, SAND AND REPAINT POLE.
(54) REPAIR DAMAGED FINIALS.
(55) FURNISH AND INSTALL NEW POLE ON EXISTING FOUNDATION. UTILIZE EXISTING ANCHOR BOLTS AND WIRING.
(56) TIE OUT, RESET, AND RECORD MONUMENT.
(57) SAWCUT AND REMOVE EXISTING PCC CURB AND GUTTER. CONSTRUCT 6" CURB AND 24" GUTTER PER SPPWC STD. PLAN 120-3.

WATER IMPROVEMENTS

[1] REMOVE EXISTING FIRE HYDRANT AND VALVE. ABANDON EXISTING FIRE SERVICE LATERAL. INSTALL 6" CLOW MEDALLION FIRE HYDRANT PER CITY FIRE HYDRANT ASSEMBLY DETAIL, W-8 INCLUDING TRENCHING PER LACWD STD. PLAN W-46.
[2] INSTALL 2" BLOW OFF, BURIED, PER LACDPW STD. PLAN W-4.
[3] NOT USED
[4] CONSTRUCT NEW 1" WATER SERVICE PER LACWD STD. PLAN W-5. REPLACE METER AND METER BOX.
[5] CONSTRUCT NEW 1" WATER SERVICE PER LACWD STD. PLAN W-5. REPLACE METER AND METER BOX. INSTALL 1" TO 3/4" BUSHING.
[6] CONSTRUCT NEW 1.5" WATER SERVICE PER LACWD STD. PLAN W-5. REPLACE METER AND METER BOX.
[7] CONSTRUCT NEW 2" WATER SERVICE PER LACWD STD. PLAN W-5. REPLACE METER AND METER BOX.
[8] REMOVE EXIST. VALVE CAN AND COVER. FILL WITH C.L.S.M. UP TO A.C.. PATCH WITH HMA.
[9] INSTALL 4" CL. 52, D.I.P. WATER MAIN LINE, INCLUDING TRENCHING PER LACDW STD. PLAN W-46. INCLUDES TYTON FIELD LOK 350 GASKETS WHERE LESS THAN 10' FROM SEWER MAIN.
[10] INSTALL 6" CL. 52, D.I.P. WATER MAIN LINE, INCLUDING TRENCHING PER LACDW STD. PLAN W-46. INCLUDES TYTON FIELD LOK 350 GASKETS WHERE LESS THAN 10' FROM SEWER MAIN.
[11] INSTALL 8" CL. 52, D.I.P. WATER MAIN LINE, INCLUDING TRENCHING PER LACDW STD. PLAN W-46. INCLUDES TYTON FIELD LOK 350 GASKETS WHERE LESS THAN 10' FROM SEWER MAIN.
[12] INSTALL 10" CL. 52, D.I.P. WATER MAIN LINE, INCLUDING TRENCHING PER LACDW STD. PLAN W-46. INCLUDES TYTON FIELD LOK 350 GASKETS WHERE LESS THAN 10' FROM SEWER MAIN.
[13] INSTALL 12" CL. 52, D.I.P. WATER MAIN LINE, INCLUDING TRENCHING PER LACDW STD. PLAN W-46. INCLUDES TYTON FIELD LOK 350 GASKETS WHERE LESS THAN 10' FROM SEWER MAIN.
[14] INSTALL 4" MUELLER RESILIENT WEDGE GATE VALVE WITH VALVE BOX AND COVER PER LACWD STD. PLAN W-15.
[15] INSTALL 6" MUELLER RESILIENT WEDGE GATE VALVE WITH VALVE BOX AND COVER PER LACWD STD. PLAN W-15.
[16] INSTALL 8" MUELLER RESILIENT WEDGE GATE VALVE WITH VALVE BOX AND COVER PER LACWD STD. PLAN W-15.
[17] INSTALL 10" MUELLER RESILIENT WEDGE GATE VALVE WITH VALVE BOX AND COVER PER LACWD STD. PLAN W-15.
[18] INSTALL 12" MUELLER RESILIENT WEDGE GATE VALVE WITH VALVE BOX AND COVER PER LACWD STD. PLAN W-15.
[19] INSTALL 8"x4" REDUCER
[20] INSTALL 8"x6" REDUCER.
[21] INSTALL 12"x8" REDUCER.
[22] INSTALL 6"x4"x4" TEE WITH THRUST BLOCK PER LACWD STD. PLAN W-21.
[23] INSTALL 6"x6"x6" TEE WITH THRUST BLOCK PER LACWD STD. PLAN W-21.
[24] INSTALL 8"x4"x4" TEE WITH THRUST BLOCK PER LACWD STD. PLAN W-21.
[25] INSTALL 8"x8"x6" TEE WITH THRUST BLOCK PER LACWD STD. PLAN W-21.
[26] INSTALL 8"x8"x8" TEE WITH THRUST BLOCK PER LACWD STD. PLAN W-21.
[27] INSTALL 8"x8"x8"x8" CROSS WITH THRUST BLOCK PER LACWD STD. PLAN W-21.
[28] INSTALL 10"x10"x8" TEE WITH THRUST BLOCK PER LACWD STD. PLAN W-21.
[29] INSTALL 12"x10"x10" TEE WITH THRUST BLOCK PER LACWD STD. PLAN W-21.
[30] INSTALL 12"x12"x12"x12" CROSS WITH THRUST BLOCK PER LACWD STD. PLAN W-21.
[31] INSTALL 4" MJxMJ 45° BEND WITH THRUST BLOCK PER LACWD STD. PLAN W-21.
[32] INSTALL 4" MJxMJ 90° BEND WITH THRUST BLOCK PER LACWD STD. PLAN W-21.
[33] INSTALL 4" MJxMJ CUSTOM ANGLED BEND WITH THRUST BLOCK PER LACWD STD. PLAN W-21
[34] INSTALL 6" MJxMJ 11.25° BEND WITH THRUST BLOCK PER LACWD STD. PLAN W-21.
[35] INSTALL 6" MJxMJ 22.5° BEND WITH THRUST BLOCK PER LACWD STD. PLAN W-21.
[36] INSTALL 6" MJxMJ 45° BEND WITH THRUST BLOCK PER LACWD STD. PLAN W-21.
[37] INSTALL 8" MJxMJ 11.25° BEND WITH THRUST BLOCK PER LACWD STD. PLAN W-21.
[38] INSTALL 8" MJxMJ 22.5° BEND WITH THRUST BLOCK PER LACWD STD. PLAN W-21.
[39] INSTALL 8" MJxMJ 45° BEND WITH THRUST BLOCK PER LACWD STD. PLAN W-21.
[40] INSTALL 10" MJxMJ 22.5° BEND WITH THRUST BLOCK PER LACWD STD. PLAN W-21.
[41] INSTALL 12" MJxMJ 11.25° BEND WITH THRUST BLOCK PER LACWD STD. PLAN W-21.
[42] INSTALL 12" MJxMJ 22.5° BEND WITH THRUST BLOCK PER LACWD STD. PLAN W-21.
[43] INSTALL 12" MJxMJ 45° BEND WITH THRUST BLOCK PER LACWD STD. PLAN W-21.
[44] INSTALL 4" MJxMJ COUPLING.
[45] INSTALL 6" MJxMJ COUPLING.
[46] INSTALL 8" MJxMJ COUPLING.
[47] INSTALL 10" MJxMJ COUPLING.
[48] INSTALL 12" MJxMJ COUPLING.
[49] INSTALL 8" BLIND FLANGE WITH THRUST BLOCK PER LACWD STD. PLAN W-21.
[50] ABANDON AND SEAL EXISTING WATER SYSTEM IN PLACE AND CUT, PLUG, AND CEMENT EXISTING PIPE END PER LACWD STD. PLAN W-22.
[51] INSTALL 4" LINE STOP.
[52] INSTALL 6" LINE STOP.
[53] INSTALL 10" LINE STOP.
[54] INSTALL 12" LINE STOP.
[55] REMOVE EXISTING FLUSH TANK AND COVER. REPLACE ENTIRE SIDEWALK PANEL IF DAMAGED.
[56] INSTALL 18"x8"x18"x8" CROSS WITH THRUST BLOCK PER LACWD STD. PLAN W-21.
[57] INSTALL 8" LINE STOP.
[58] INSTALL 2" AIR-RELEASE AND VACUUM VALVE ASSEMBLY PER LACWD STD. PLAN W-16. REPLACE ENTIRE SIDEWALK PANEL IF DAMAGED.
[59] INSTALL 6" MJxMJ 90° BEND WITH THRUST BLOCK PER LACWD STD. PLAN W-21.
[60] INSTALL 18" LINE STOP.
[61] FILL ABANDONED WATER LINES UNDER TRACKS, EXTENDING 10' BEYOND RAILROAD GATES WITH CELLCRETE.
[62] REMOVE EXISTING FIRE SERVICE METER AND VAULT. INSTALL AMES 1000DCV-CFM 6 CHECK VALVE AND TWO (2) 6" MUELLER RESILIENT WEDGE GATE VALVES (BID ITEM INCLUDES VALVES) IN AN ARMORCAST 48"x60"x36" RPM VAULT WITH TWO POLYMER CONCRETE COVER LIDS, WITH ONE 9"x14" DROP IN LID, BOLT DOWN, AND "WATER" LOGO.

Know what's Call before you dig. 811

BASIS OF BEARING:
THE BEARINGS AND COORDINATES HEREON ARE BASED ON THE CALIFORNIA COORDINATE SYSTEM OF 1983 (NAD83), ZONE 5 DATUM, BASED LOCALLY ON A LINE BETWEEN NGS CONTROL POINTS EV3794 AND EV3841, BEING N84°35'29"W, 1991.35 EPOCH.

BENCHMARK:
LOS ANGELES COUNTY PUBLIC WORKS BENCH MARK NO. 1G4120.
DESCRIPTION: (SBM MON IN S. END C.B. 5FT N/O BCR @ NE COR. SAN GABRIEL BLVD & HUNTINGTON DR MKD (BM 10-5A 1966).
ELEVATION = 601.950

Δ	DATE	DESCRIPTION	APP'D	DATE

REVISIONS

CITY OF SOUTH PASADENA

APPROVED BY: _____ DATE

REGISTERED PROFESSIONAL ENGINEER — KURT R. PEDERSEN — NO. 69745 — CIVIL — STATE OF CALIFORNIA

RKA CONSULTING GROUP
398 S. LEMON CREEK DRIVE · SUITE E · WALNUT, CA · 91789
(909) 594-9702 · FAX (909) 594-2658
WWW.RKAGROUP.COM

KURT R. PEDERSEN RCE 69745 5-13-25 DATE

CITY OF SOUTH PASADENA
FY2019-20 STREET & WATER IMP.
NOTES AND DETAILS
STREET & WATER IMPROVEMENT PROJECT

SHEET 2 OF 33 SHEETS

REVIEWED BY: KRP
DRAWN BY:
DESIGNED BY:
DRAWING NAME: \ACAD\323007\DWG\LSTR02.DWG
JOB NO.: 323007
PLAN SET: FY19-20 STREET IMPROVEMENT PROJECT
LATEST MYLAR REVISION DATE: X
DRAWING LAST UPDATED: 2021-1-21
MYLAR PLOT DATE: X

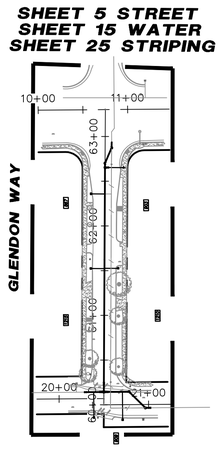

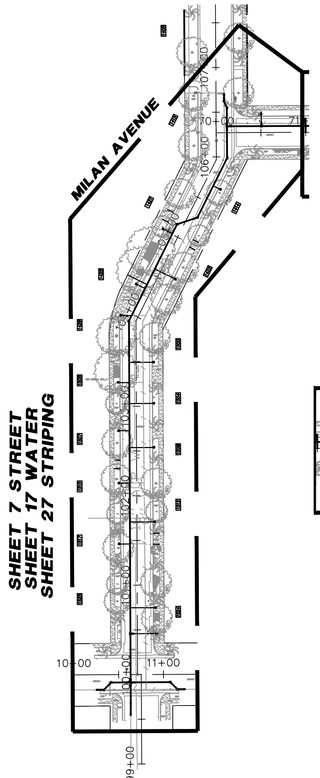

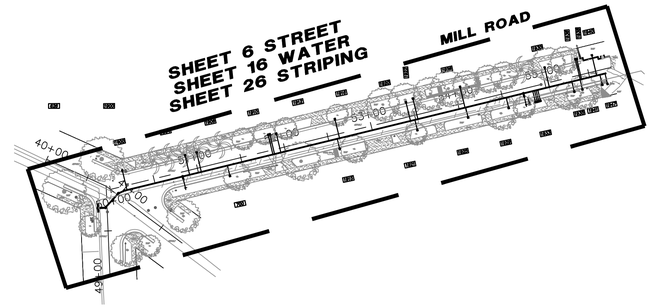

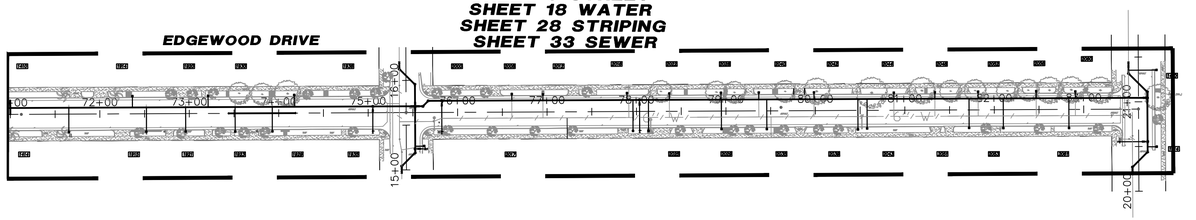

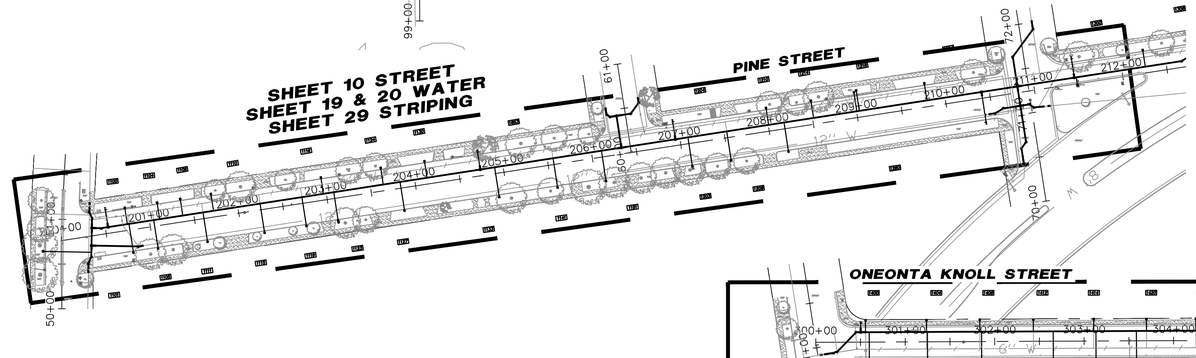

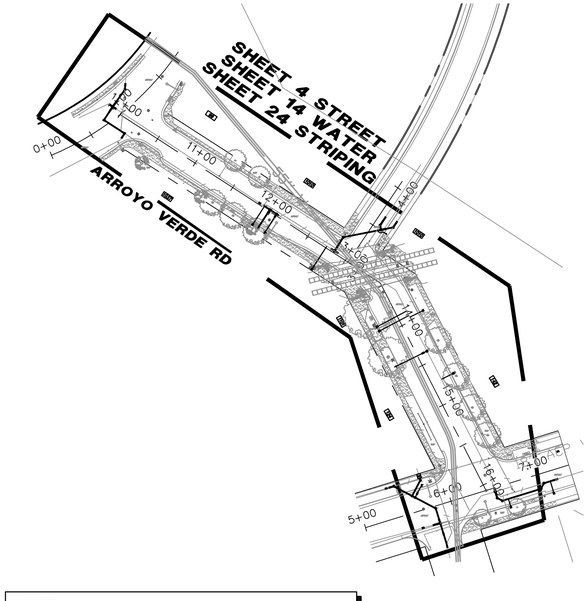

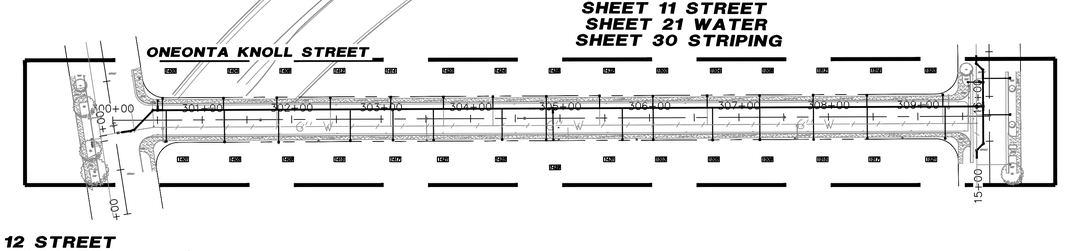

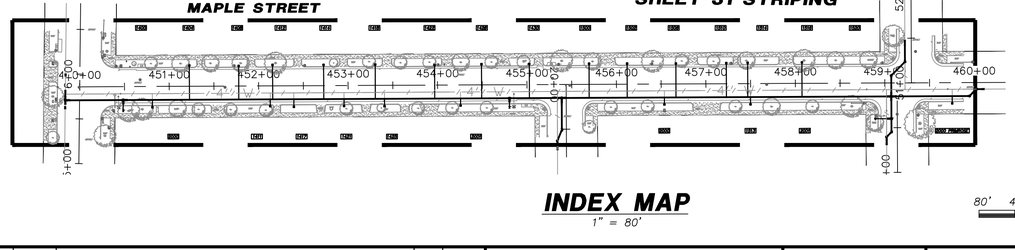

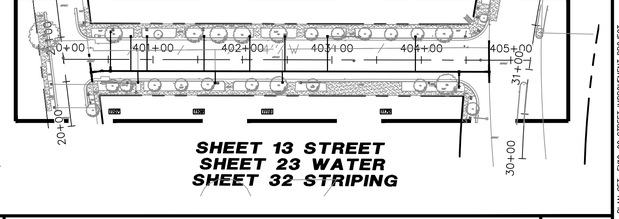

NOTE:
HORIZONTAL AND VERTICAL LOCATIONS TO BE VERIFIED IN THE FIELD AND ENGINEER NOTIFIED OF ANY DISCREPANCIES PRIOR TO CONSTRUCTION.

INDEX MAP
1" = 80'

RKA NORTH

80' 40' 0' 80' 160'
GRAPHIC SCALE: 1"=80'

811 Know what's Call below. before you dig.

BASIS OF BEARING.
THE BEARINGS AND COORDINATES HEREON ARE BASED ON THE CALIFORNIA COORDINATE SYSTEM OF 1983 (NAD83), ZONE 5 DATUM, BASED LOCALLY ON A LINE BETWEEN NGS CONTROL POINTS EV3794 AND EV3841, BEING N84°35'29"W, 1991.35 EPOCH.

BENCHMARK.
LOS ANGELES COUNTY PUBLIC WORKS BENCH MARK NO. 1C4120.
DESCRIPTION: (SBM MON IN S. END C.B. 5FT N/O BCR @ NE COR. SAN GABRIEL BLVD & HUNTINGTON DR MKD (BM 10-5A 1966).
ELEVATION = 601.950

△	DATE	DESCRIPTION	APP'D	DATE

REVISIONS

CITY OF SOUTH PASADENA

APPROVED BY: _____ DATE

REGISTERED PROFESSIONAL ENGINEER — KURT R. PEDERSEN — NO. 69745 — CIVIL — STATE OF CALIFORNIA

RKA CONSULTING GROUP
396 S. LEMON CREEK DRIVE - SUITE E-WALNUT-CA-91789
(909) 594-9702 - FAX (909) 594-2658
WWW.RKAGROUP.COM

5-13-26
KURT R. PEDERSEN RCE 69745 DATE

CITY OF SOUTH PASADENA

FY2019-20 STREET & WATER IMP.

INDEX MAP

STREET & WATER IMPROVEMENT PROJECT

SHEET 3 OF 33 SHEETS

DRAWING LAST UPDATED: 2024-10-17 PLAN SET: FY19-20 STREET IMPROVEMENT PROJECT
MYLAR PLOT DATE: X LATEST MYLAR REVISION DATE: X

DESIGNED BY:
DRAWN BY:
REVIEWED BY: KRP
JOB NO.: 323007
DRAWING NAME: \ACAD\323007\DWG\STR03.DWG

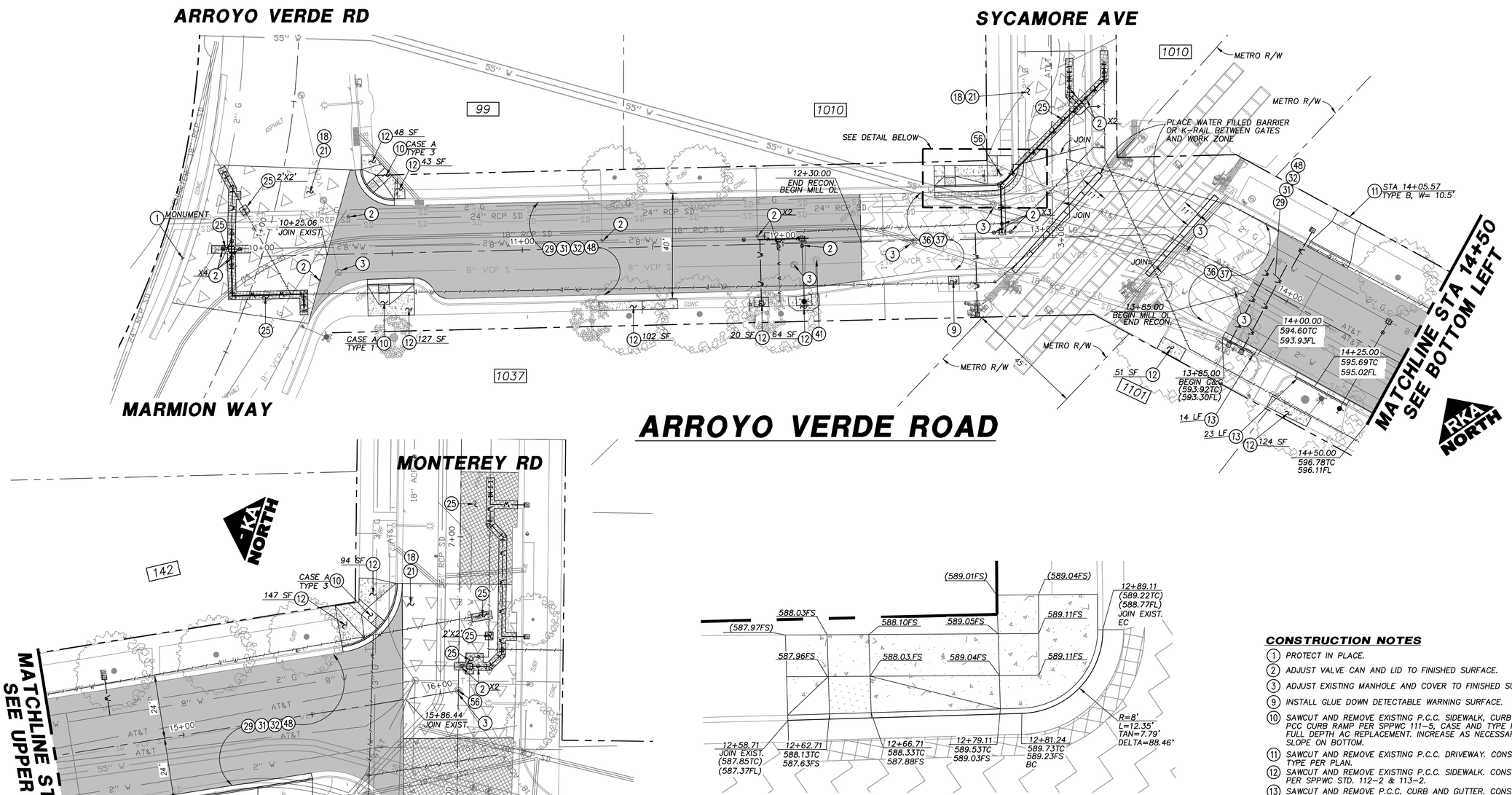

43 CUSTOM RAMP DETAIL

1"=5'

BID ITEM INCLUDES RAMP, ALL SIDEWALK, ALL CURB AND GUTTER, AND 2' MINIMUM FULL DEPTH AC REPLACEMENT SHOWN IN THE ABOVE DETAIL.

NOTE:
HORIZONTAL AND VERTICAL LOCATIONS TO BE VERIFIED IN THE FIELD AND ENGINEER NOTIFIED OF ANY DISCREPANCIES PRIOR TO CONSTRUCTION.

NOTES

1. REFER TO WATER PLANS FOR ALL WATER VALVE REPLACEMENTS OR REMOVALS.

LEGEND

- CONSTRUCT 4" AC (2.5" B, 1.5" C2) ON 3" CMB
- 1.5" COLD MILL & 1.5" AC OVERLAY, C2
- CONSTRUCT 6" FULL-DEPTH AC REPAIR.
- COLD MILL EXISTING PAVEMENT TO A DEPTH OF 2". CONSTRUCT 2" AC OVERLAY., C2.
- SAWCUT AND REMOVE EXISTING P.C.C. SIDEWALK. CONSTRUCT 4" THICK P.C.C. SIDEWALK.

20' 10' 0' 20' 40'
GRAPHIC SCALE: 1"=20'

CONSTRUCTION NOTES

(1) PROTECT IN PLACE.
(2) ADJUST VALVE CAN AND LID TO FINISHED SURFACE.
(3) ADJUST EXISTING MANHOLE AND COVER TO FINISHED SURFACE.
(9) INSTALL GLUE DOWN DETECTABLE WARNING SURFACE. BOLT DOWN AT CORNERS.
(10) SAWCUT AND REMOVE EXISTING P.C.C. SIDEWALK, CURB RAMP AND CURB & GUTTER. CONSTRUCT PCC CURB RAMP PER SPPWC 111-5, CASE AND TYPE PER PLAN. INCLUDES 2' MINIMUM FULL DEPTH AC REPLACEMENT. INCREASE AS NECESSARY TO PROVIDE 4'X4', 5% MAXIMUM SLOPE ON BOTTOM.
(11) SAWCUT AND REMOVE EXISTING P.C.C. DRIVEWAY. CONSTRUCT DRIVEWAY PER SPPWC 110-2, TYPE PER PLAN.
(12) SAWCUT AND REMOVE EXISTING P.C.C. SIDEWALK. CONSTRUCT 4" THICK P.C.C. SIDEWALK PER SPPWC STD. 112-2 & 113-2.
(13) SAWCUT AND REMOVE P.C.C. CURB AND GUTTER. CONSTRUCT 8" CURB AND 24" GUTTER PER SPPWC STD. PLAN 120-3.
(16) SAWCUT AND REMOVE EXISTING EXISTING PCC CROSS GUTTER. CONSTRUCT CROSS GUTTER PER SPPWC STD. PLAN 122-3. INCLUDES 2' FULL DEPTH AC REPLACEMENT.
(18) COLD MILL EXISTING PAVEMENT TO A DEPTH OF 2".
(21) CONSTRUCT 2" AC OVERLAY, C2.
(25) SAWCUT AND REMOVE EXISTING AC AND SUBGRADE. CONSTRUCT 6" FULL-DEPTH AC REPAIR.
(29) REMOVE EXISTING MACADAM AND SUBGRADE.
(31) REMOVE EXISTING AC.
(32) CONSTRUCT 4" AC PAVEMENT (2.5" B, 1.5" C2)
(36) COLD MILL TO A DEPTH OF 1.5".
(37) CONSTRUCT 1.5" AC OVERLAY, C2.
(41) SALVAGE EXISTING HPS COBRA HEAD AND INSTALL NEW LED COBRA HEAD ASSEMBLY.
(43) SAWCUT AND REMOVE EXISTING CURB RAMP, CURB AND GUTTER, AND SIDEWALK. CONSTRUCT CUSTOM RAMP, CURB AND GUTTER, AND SIDEWALK PER DETAIL ON SHEET 4. SAWCUT AND REMOVE PCC PAVEMENT. INCLUDES 2' MINIMUM FULL DEPTH AC REPLACEMENT. INCREASE AS NECESSARY TO PROVIDE 4'X4', 5% MAXIMUM SLOPE ON BOTTOM.
(48) CONSTRUCT 3" CMB.
(56) TIE OUT, RESET, AND RECORD MONUMENT.
(57) SAWCUT AND REMOVE P.C.C. CURB AND GUTTER. CONSTRUCT 6" CURB AND 24" GUTTER PER SPPWC STD. PLAN 120-3.

Know what's Call before you dig. 811

BASIS OF BEARING.
THE BEARINGS AND COORDINATES HEREON ARE BASED ON THE CALIFORNIA COORDINATE SYSTEM OF 1983 (NAD83), ZONE 5 DATUM, BASED LOCALLY ON A LINE BETWEEN NGS CONTROL POINTS EV3794 AND EV3841, BEING N84°35'29"W, 1991.35 EPOCH.

BENCHMARK.
LOS ANGELES COUNTY PUBLIC WORKS BENCH MARK NO. 1C4120.
DESCRIPTION: (SBM MON IN S. END C.B. 5FT N/O BCR @ NE COR. SAN GABRIEL BLVD & HUNTINGTON DR MKD (BM 10-5A 1966).
ELEVATION = 601.950

Δ	DATE	DESCRIPTION	APP'D	DATE

REVISIONS

CITY OF SOUTH PASADENA
APPROVED BY: _____ DATE

REGISTERED PROFESSIONAL ENGINEER — KURT R. PEDERSEN — NO. 69745 — CIVIL — STATE OF CALIFORNIA

RKA CONSULTING GROUP
396 S. LEMON CREEK DRIVE - SUITE E-WALNUT-CA-91789
(909) 594-9702 - FAX (909) 594-2658
WWW.RKAGROUP.COM
KURT R. PEDERSEN RCE 69745 5-13-26 DATE

CITY OF SOUTH PASADENA
FY2019-20 STREET & WATER IMP.
STREET IMPROVEMENT
ARROYO VERDE ROAD
STREET & WATER IMPROVEMENT PROJECT

SHEET 4 OF 33 SHEETS

DRAWING LAST UPDATED: 2024-10-17 PLAN SET: FY19-20 STREET IMPROVEMENT PROJECT
MLTAR PLOT DATE: X LATEST MYLAR REVISION DATE: X
DRAWING NAME: X: \CAD\323007\DWG\LSTR04.DWG
JOB NO.: 323007
DESIGNED BY:
DRAWN BY:
REVIEWED BY: KRP

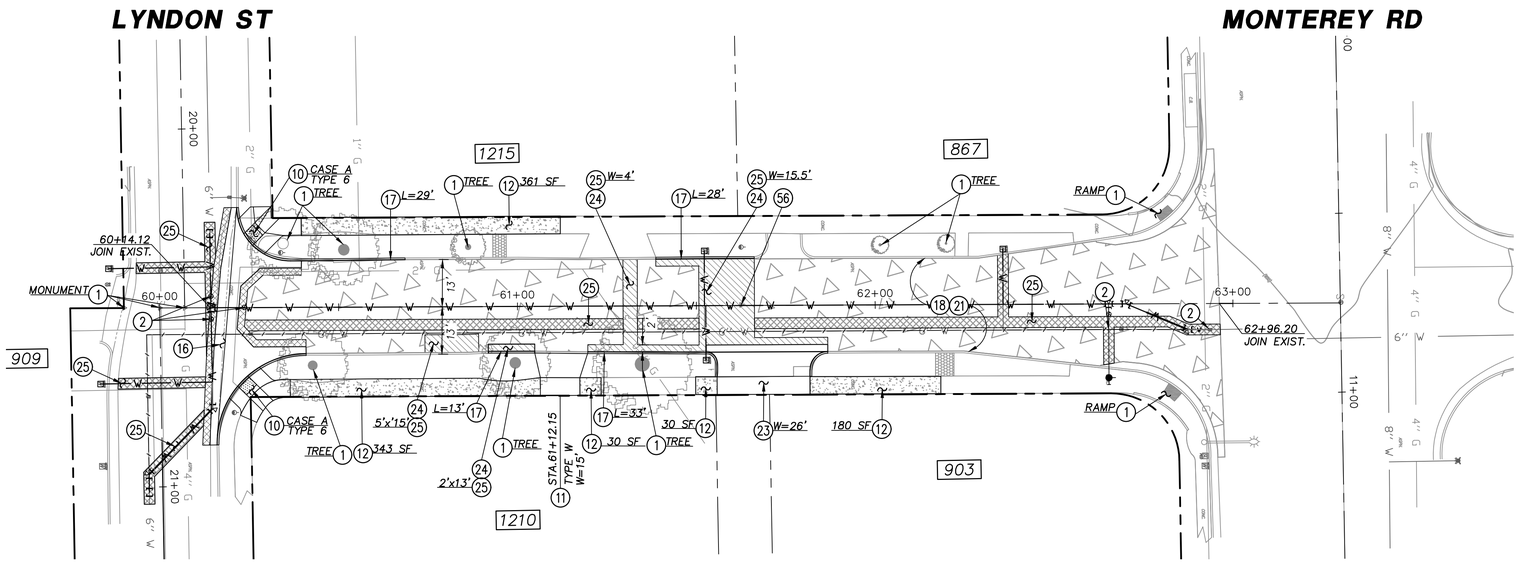

NOTE:
HORIZONTAL AND VERTICAL LOCATIONS TO BE VERIFIED IN THE FIELD AND ENGINEER NOTIFIED OF ANY DISCREPANCIES PRIOR TO CONSTRUCTION.

NOTES

1. REFER TO WATER PLANS FOR ALL WATER VALVE REPLACEMENTS OR REMOVALS.

RKA NORTH

20' 10' 0' 20' 40'

GRAPHIC SCALE: 1"=20'

LEGEND

- CONSTRUCT 6" FULL-DEPTH AC REPAIR.
- COLD MILL EXISTING PAVEMENT TO A DEPTH OF 2". CONSTRUCT 2" AC OVERLAY., C2.
- SAWCUT AND REMOVE EXISTING P.C.C. SIDEWALK. CONSTRUCT 4" THICK P.C.C. SIDEWALK.
- REMOVE AC, SUBGRADE, AND TREE ROOTS PER CITY ARBORIST'S DIRECTION AND CONSTRUCT 6" FULL-DEPTH AC REPAIR.

CONSTRUCTION NOTES

(1) PROTECT IN PLACE.
(2) ADJUST VALVE CAN AND LID TO FINISHED SURFACE.
(10) SAWCUT AND REMOVE EXISTING P.C.C. SIDEWALK, CURB RAMP AND CURB & GUTTER. CONSTRUCT PCC CURB RAMP PER SPPWC 111-5, CASE AND TYPE PER PLAN. INCLUDES 2' MINIMUM FULL DEPTH AC REPLACEMENT. INCREASE AS NECESSARY TO PROVIDE 4'X4', 5% MAXIMUM SLOPE ON BOTTOM.
(11) SAWCUT AND REMOVE EXISTING P.C.C. DRIVEWAY. CONSTRUCT DRIVEWAY PER SPPWC 110-2, TYPE PER PLAN.
(12) SAWCUT AND REMOVE EXISTING P.C.C. SIDEWALK. CONSTRUCT 4" THICK P.C.C. SIDEWALK PER SPPWC 112-2 & 113-2.
(16) SAWCUT AND REMOVE EXISTING PCC CROSS GUTTER. CONSTRUCT CROSS GUTTER PER SPPWC STD. 122-3. INCLUDES 2' FULL DEPTH AC REPLACEMENT.
(17) SAWCUT AND REMOVE EXISTING PCC CURB. CONSTRUCT 6" CURB PER SPPWC STD. 120-3. INCLUDES 2' FULL DEPTH AC REPLACEMENT.
(18) COLD MILL EXISTING PAVEMENT TO A DEPTH OF 2".
(21) CONSTRUCT 2" AC OVERLAY, C2.
(23) REMOVE EXISTING PCC AND AC. CONSTRUCT ALLEY INTERSECTION PER SPPWC STD. PLAN 130-2. INCLUDES 2' FULL DEPTH OF AC REPLACEMENT.
(24) REMOVE TREE ROOTS PER CITY ARBORIST'S DIRECTION.
(25) SAWCUT AND REMOVE EXISTING AC AND SUBGRADE. CONSTRUCT 6" FULL-DEPTH AC REPAIR.
(56) TIE OUT, RESET, AND RECORD MONUMENT.

811 Know what's Call before you dig.

BASIS OF BEARING:
THE BEARINGS AND COORDINATES HEREON ARE BASED ON THE CALIFORNIA COORDINATE SYSTEM OF 1983 (NAD83), ZONE 5 DATUM, BASED LOCALLY ON A LINE BETWEEN NGS CONTROL POINTS EV3794 AND EV3841, BEING N84°35'29"W, 1991.35 EPOCH.

BENCHMARK:
LOS ANGELES COUNTY PUBLIC WORKS BENCH MARK NO. 1G4120.
DESCRIPTION: (SBM MON IN S. END C.B. 5FT N/O BCR @ NE COR. SAN GABRIEL BLVD & HUNTINGTON DR MKD (BM 10-5A 1966).
ELEVATION = 601.950

Δ	DATE	DESCRIPTION	APP'D	DATE

REVISIONS

CITY OF SOUTH PASADENA

APPROVED BY: _____ DATE

REGISTERED PROFESSIONAL ENGINEER KURT R. PEDERSEN NO. 69745 CIVIL STATE OF CALIFORNIA

RKA CONSULTING GROUP
398 S. LEMON CREEK DRIVE-SUITE E-WALNUT-CA-91789
(909) 594-9702-FAX (909) 594-2658
WWW.RKAGROUP.COM

5-13-25
KURT R. PEDERSEN RCE 69745 DATE

CITY OF SOUTH PASADENA

FY2019-20 STREET & WATER IMP.

STREET IMPROVEMENT
GLENDON WAY

STREET & WATER IMPROVEMENT PROJECT

SHEET 5 OF 33 SHEETS

REVIEWED BY: KRP
DRAWN BY:
DESIGNED BY:
DRAWING NAME: \ACAD\323007\DWG\LST805.DWG
JOB NO.: 323007
PLAN SET: FY19-20 STREET IMPROVEMENT PROJECT
DRAWING LAST UPDATED: 2021-1-21
LATEST MYLAR REVISION DATE: X
MYLAR PLOT DATE: X

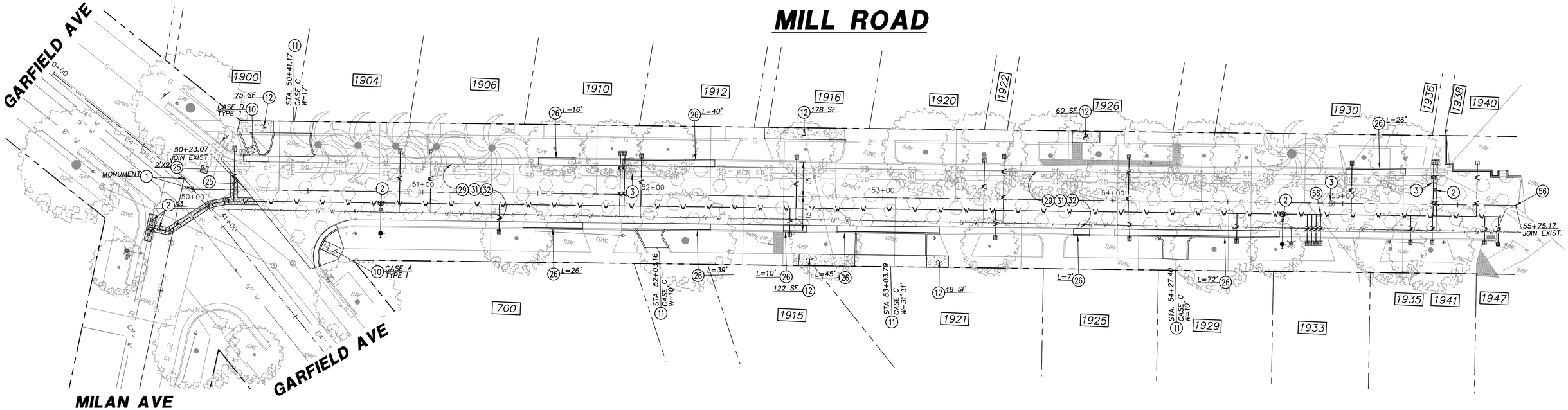

RKA NORTH

20' 10' 0' 20' 40'

GRAPHIC SCALE: 1"=20'

CONSTRUCTION NOTES

(2) ADJUST VALVE CAN AND LID TO FINISHED SURFACE.

(3) ADJUST EXISTING MANHOLE AND COVER TO FINISHED SURFACE.

(10) SAWCUT AND REMOVE EXISTING P.C.C. SIDEWALK, CURB RAMP AND CURB & GUTTER. CONSTRUCT PCC CURB RAMP PER SPPWC 111-5, CASE AND TYPE PER PLAN. INCLUDES 2' MINIMUM FULL DEPTH AC REPLACEMENT. INCREASE AS NECESSARY TO PROVIDE 4'X4', 5% MAXIMUM SLOPE ON BOTTOM.

(11) SAWCUT AND REMOVE EXISTING P.C.C. DRIVEWAY. CONSTRUCT DRIVEWAY PER SPPWC 110-2, TYPE PER PLAN.

(12) SAWCUT AND REMOVE EXISTING P.C.C. SIDEWALK. CONSTRUCT 4" THICK P.C.C. SIDEWALK PER SPPWC 112-2 & 113-2.

(25) SAWCUT AND REMOVE EXISTING AC AND SUBGRADE. CONSTRUCT 6" FULL-DEPTH AC REPAIR.

(26) SAWCUT AND REMOVE EXISTING PCC CURB AND GUTTER. CONSTRUCT 8" CURB AND 30" GUTTER PER SPPWC STD. PLAN 120-3. INCLUDES 2' FULL DEPTH AC REPLACEMENT.

(29) REMOVE EXISTING MACADAM AND SUBGRADE.

(31) REMOVE EXISTING AC.

(32) CONSTRUCT 4" AC PAVEMENT (2.5" B, 1.5" C2)

(56) TIE OUT, RESET, AND RECORD MONUMENT.

LEGEND

CONSTRUCT 4" AC (2.5" B, 1.5" C2).

CONSTRUCT 6" FULL-DEPTH AC REPAIR.

SAWCUT AND REMOVE EXISTING P.C.C. SIDEWALK. CONSTRUCT 4" THICK P.C.C. SIDEWALK.

NOTE:
HORIZONTAL AND VERTICAL LOCATIONS TO BE VERIFIED IN THE FIELD AND ENGINEER NOTIFIED OF ANY DISCREPANCIES PRIOR TO CONSTRUCTION.

NOTES

1. REFER TO WATER PLANS FOR ALL WATER VALVE REPLACEMENTS OR REMOVALS.

811 Know what's Call before you dig.

BASIS OF BEARING:
THE BEARINGS AND COORDINATES HEREON ARE BASED ON THE CALIFORNIA COORDINATE SYSTEM OF 1983 (NAD83), ZONE 5 DATUM, BASED LOCALLY ON A LINE BETWEEN NGS CONTROL POINTS EV3794 AND EV3841, BEING N84°35'29"W, 1991.35 EPOCH.

BENCHMARK:
LOS ANGELES COUNTY PUBLIC WORKS BENCH MARK NO. 1G4120.
DESCRIPTION: (SBM MON IN S. END C.B. 5FT N/O BCR @ NE COR. SAN GABRIEL BLVD & HUNTINGTON DR MKD (BM 10-5A 1966).
ELEVATION = 601.950

Δ	DATE	DESCRIPTION	APP'D	DATE

REVISIONS

CITY OF SOUTH PASADENA

APPROVED BY: _____ DATE

REGISTERED PROFESSIONAL ENGINEER — KURT R. PEDERSEN — NO. 69745 — CIVIL — STATE OF CALIFORNIA

RKA CONSULTING GROUP
398 S. LEMON CREEK DRIVE · SUITE E · WALNUT · CA · 91789
(909) 594-9702 · FAX (909) 594-2658
WWW.RKAGROUP.COM

5-13-25
KURT R. PEDERSEN RCE 69745 DATE

CITY OF SOUTH PASADENA

FY2019-20 STREET & WATER IMP.

STREET IMPROVEMENT
MILL ROAD

STREET & WATER IMPROVEMENT PROJECT

SHEET 6 OF 33 SHEETS

REVIEWED BY: KRP
DRAWN BY:
DESIGNED BY:
JOB NO: 323007
DRAWING NAME: \ACAD\323007\DWG\LSTR06.DWG
PLAN SET: FY19-20 STREET IMPROVEMENT PROJECT
LATEST MILAR REPRO DATE: X
DRAWING LAST UPDATED: 2021-1-21
MILAR PLOT DATE: X

MILAN AVENUE

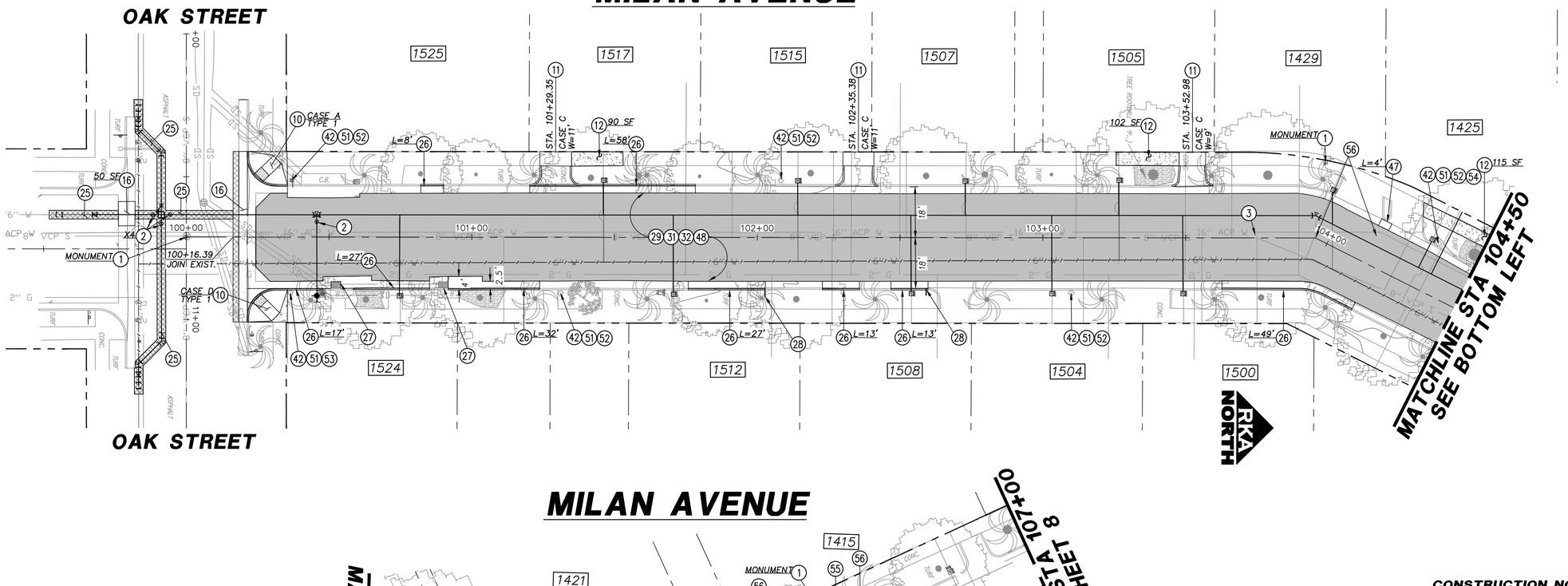

MILAN AVENUE

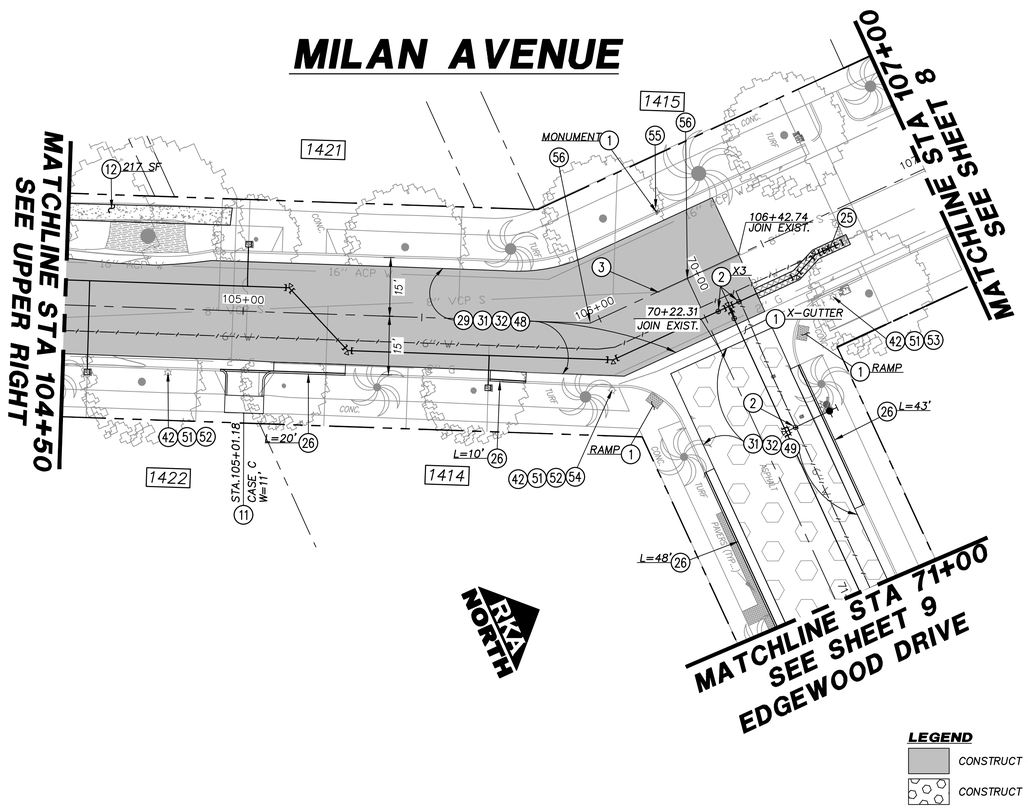

CONSTRUCTION NOTES

1. PROTECT IN PLACE.
2. ADJUST VALVE CAN AND LID TO FINISHED SURFACE.
3. ADJUST EXISTING MANHOLE AND COVER TO FINISHED SURFACE.
10. SAWCUT AND REMOVE EXISTING P.C.C. SIDEWALK, CURB RAMP AND CURB & GUTTER. CONSTRUCT PCC CURB RAMP PER SPPWC 111-5, CASE AND TYPE PER PLAN. INCLUDES 2' MINIMUM FULL DEPTH AC REPLACEMENT. INCREASE AS NECESSARY TO PROVIDE 4'X4', 5% MAXIMUM SLOPE ON BOTTOM.
11. SAWCUT AND REMOVE EXISTING P.C.C. DRIVEWAY. CONSTRUCT DRIVEWAY PER SPPWC 110-2, TYPE PER PLAN.
12. SAWCUT AND REMOVE EXISTING P.C.C. SIDEWALK. CONSTRUCT 4" THICK P.C.C. SIDEWALK PER SPPWC 112-2 & 113-2.
16. SAWCUT AND REMOVE EXISTING EXISTING PCC CROSS GUTTER. CONSTRUCT CROSS GUTTER PER SPPWC STD. PLAN 122-3. INCLUDES 2' FULL DEPTH AC REPLACEMENT.
25. SAWCUT AND REMOVE EXISTING AC AND SUBGRADE. CONSTRUCT 6" FULL-DEPTH AC REPAIR.
26. SAWCUT AND REMOVE EXISTING PCC CURB AND GUTTER. CONSTRUCT 8" CURB AND 30" GUTTER PER SPPWC STD. PLAN 120-3.
27. SAWCUT AND REMOVE EXISTING PCC LOCAL DEPRESSION PER SPPWC STD. PLAN 313-4, MODIFIED TO MATCH EXISTING.
28. REPLACE CURB DRAIN PER SPPWC 150-4.
29. REMOVE EXISTING MACADAM AND SUBGRADE.
31. REMOVE EXISTING AC.
32. CONSTRUCT 4" AC PAVEMENT (2.5" B, 1.5" C2).
42. SALVAGE EXISTING LUMINAIRE AND INSTALL NEW DECORATIVE LED LUMINAIRE.
47. SAWCUT AND REMOVE EXISTING GUTTER. CONSTRUCT 30" GUTTER PER SPPWC STD. PLAN 120-3.
48. CONSTRUCT 3" CMB.
49. REMOVE SUBGRADE (UNCLASSIFIED EXCAVATION).
51. REMOVE AND REPLACE ALL LENSES.
52. REMOVE LOOSE AND FLAKING COATINGS, LOOSE AND FLAKING RUST, AND OTHER FOREIGN SURFACE CONTAMINANTS. SAND AND REPAINT POLE.
53. STRIP ENTIRE POLE, SAND AND REPAINT POLE.
54. REPAIR DAMAGED FINIALS.
55. FURNISH AND INSTALL NEW POLE ON EXISTING FOUNDATION. UTILIZE EXISTING ANCHOR BOLTS AND WIRING.
56. TIE OUT, RESET, AND RECORD MONUMENT.

LEGEND

- CONSTRUCT 4" AC (2.5" B, 1.5" C2) ON 3" CMB.
- CONSTRUCT 4" AC (2.5" B, 1.5" C2).
- SAWCUT AND REMOVE EXISTING P.C.C. SIDEWALK. CONSTRUCT 4" THICK P.C.C. SIDEWALK.
- CONSTRUCT 6" FULL-DEPTH AC REPAIR.

20' 10' 0' 20' 40'
GRAPHIC SCALE: 1"=20'

NOTE:
HORIZONTAL AND VERTICAL LOCATIONS TO BE VERIFIED IN THE FIELD AND ENGINEER NOTIFIED OF ANY DISCREPANCIES PRIOR TO CONSTRUCTION.

811 Know what's below. Call before you dig.

BASIS OF BEARING:
THE BEARINGS AND COORDINATES HEREON ARE BASED ON THE CALIFORNIA COORDINATE SYSTEM OF 1983 (NAD83), ZONE 5 DATUM, BASED LOCALLY ON A LINE BETWEEN NGS CONTROL POINTS EV3794 AND EV3841, BEING N84°35'29"W, 1991.35 EPOCH.

BENCHMARK:
LOS ANGELES COUNTY PUBLIC WORKS BENCH MARK NO. 1G4120.
DESCRIPTION: (SBM MON IN S. END C.B. 5FT N/O BCR @ NE COR. SAN GABRIEL BLVD & HUNTINGTON DR MKD (BM 10-5A 1966).
ELEVATION = 601.950

Δ	DATE	DESCRIPTION	APP'D	DATE

REVISIONS

CITY OF SOUTH PASADENA

APPROVED BY: _____ DATE

REGISTERED PROFESSIONAL ENGINEER — KURT R. PEDERSEN — NO. 69745 — CIVIL — STATE OF CALIFORNIA

RKA CONSULTING GROUP
398 S. LEMON CREEK DRIVE - SUITE E-WALNUT-CA-91789
(909) 594-9702 - FAX (909) 594-2658
WWW.RKAGROUP.COM

KURT R. PEDERSEN RCE 69745 5-13-25 DATE

CITY OF SOUTH PASADENA

FY2019-20 STREET & WATER IMP.
STREET IMPROVEMENT
MILAN AVENUE AND EDGEWOOD DRIVE

STREET & WATER IMPROVEMENT PROJECT

SHEET 7 OF 33 SHEETS

DESIGNED BY:
DRAWN BY:
REVIEWED BY: KRP
JOB NO.: 323007
DRAWING NAME: \ACAD\323007\DWG\LST07.DWG
PLAN SET: FY19-20 STREET IMPROVEMENT PROJECT
LATEST MILAN REVISION DATE: X
DRAWING LAST UPDATED: 2021-1-21
MILAN PLOT DATE: X

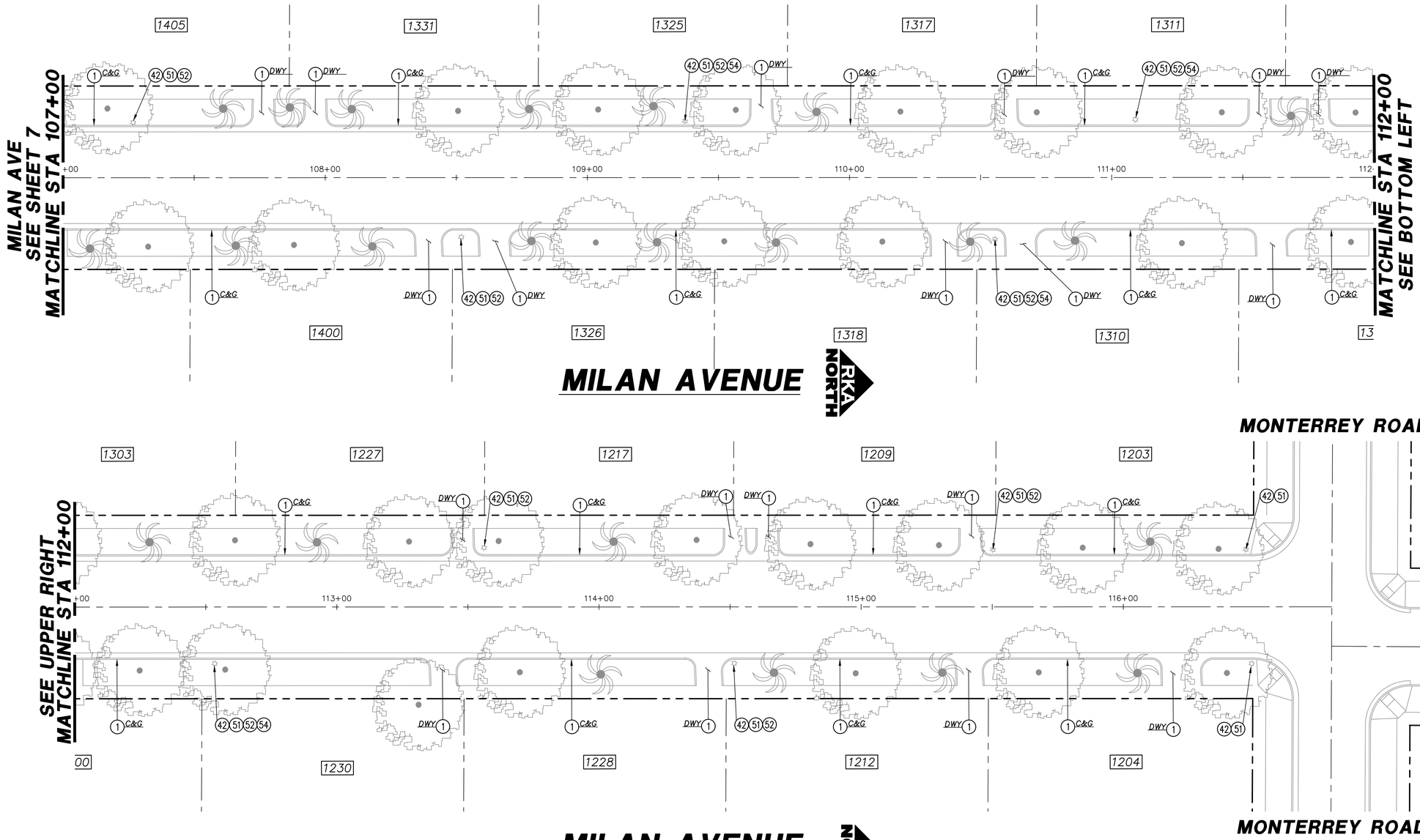

NOTE:
HORIZONTAL AND VERTICAL LOCATIONS TO BE VERIFIED IN THE FIELD AND ENGINEER NOTIFIED OF ANY DISCREPANCIES PRIOR TO CONSTRUCTION.

20' 10' 0' 20' 40'
GRAPHIC SCALE: 1"=20'

CONSTRUCTION NOTES

(1) PROTECT IN PLACE.

(42) SALVAGE EXISTING LUMINAIRE AND INSTALL NEW DECORATIVE LED LUMINAIRE.

(51) REMOVE AND REPLACE ALL LENSES.

(52) REMOVE LOOSE AND FLAKING COATINGS, LOOSE AND FLAKING RUST, AND OTHER FOREIGN SURFACE CONTAMINANTS. SAND AND REPAINT POLE.

(54) REPAIR DAMAGED FINIALS.

811 Know what's Call below. before you dig.

BASIS OF BEARING:
THE BEARINGS AND COORDINATES HEREON ARE BASED ON THE CALIFORNIA COORDINATE SYSTEM OF 1983 (NAD83), ZONE 5 DATUM, BASED LOCALLY ON A LINE BETWEEN NGS CONTROL POINTS EV3794 AND EV3841, BEING N84°35'29"W, 1991.35 EPOCH.

BENCHMARK:
LOS ANGELES COUNTY PUBLIC WORKS BENCH MARK NO. 1G4120.
DESCRIPTION: (SBM MON IN S. END C.B. 5FT N/O BCR @ NE COR. SAN GABRIEL BLVD & HUNTINGTON DR MKD (BM 10-5A 1966).
ELEVATION = 601.950

Δ	DATE	DESCRIPTION	APP'D	DATE

REVISIONS

CITY OF SOUTH PASADENA

APPROVED BY: _____ DATE

REGISTERED PROFESSIONAL ENGINEER
KURT R. PEDERSEN
NO. 69745
CIVIL
STATE OF CALIFORNIA

RKA CONSULTING GROUP
398 S. LEMON CREEK DRIVE - SUITE E-WALNUT-CA-91789
(909) 594-9702-FAX (909) 594-2658
WWW.RKAGROUP.COM

5-13-25
KURT R. PEDERSEN RCE 69745 DATE

CITY OF SOUTH PASADENA

FY2019-20 STREET & WATER IMP.

STREET IMPROVEMENT
MILAN AVENUE

STREET & WATER IMPROVEMENT PROJECT

SHEET 8 OF 33 SHEETS

REVIEWED BY: KRP
DRAWN BY:
DESIGNED BY:
DRAWING NAME: \ACAD\323007\DWG\LSTR07.DWG
JOB NO: 323007
PLAN SET: FY19-20 STREET IMPROVEMENT PROJECT
LATEST MILAR REVISION DATE: X
DRAWING LAST UPDATED: 2021-1-21
MILAR PLOT DATE: X

EDGEWOOD DRIVE

CHELTEN WAY

MATCHLINE STA 71+00
SEE SHEET 7

MATCHLINE STA 77+50
SEE BOTTOM LEFT

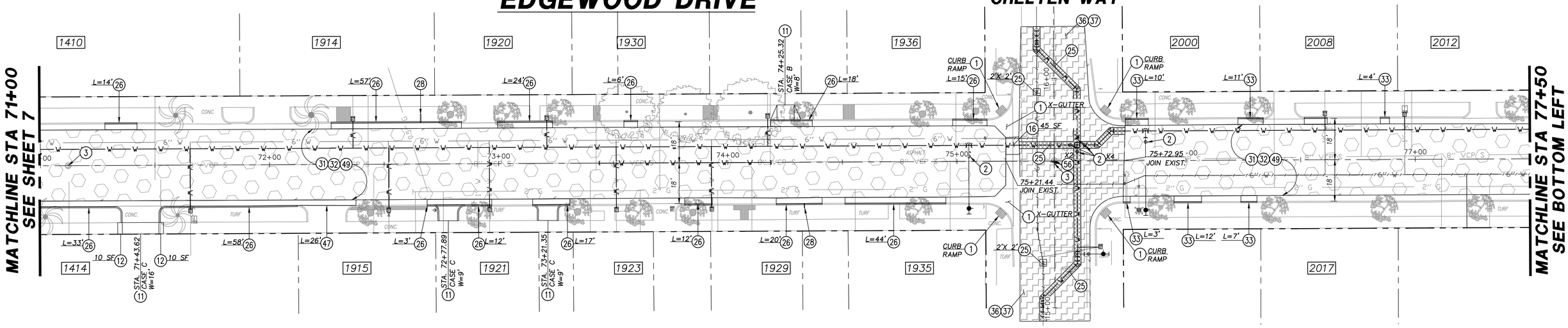

EDGEWOOD DRIVE

WAYNE AVE

MATCHLINE STA 77+50
SEE UPPER RIGHT

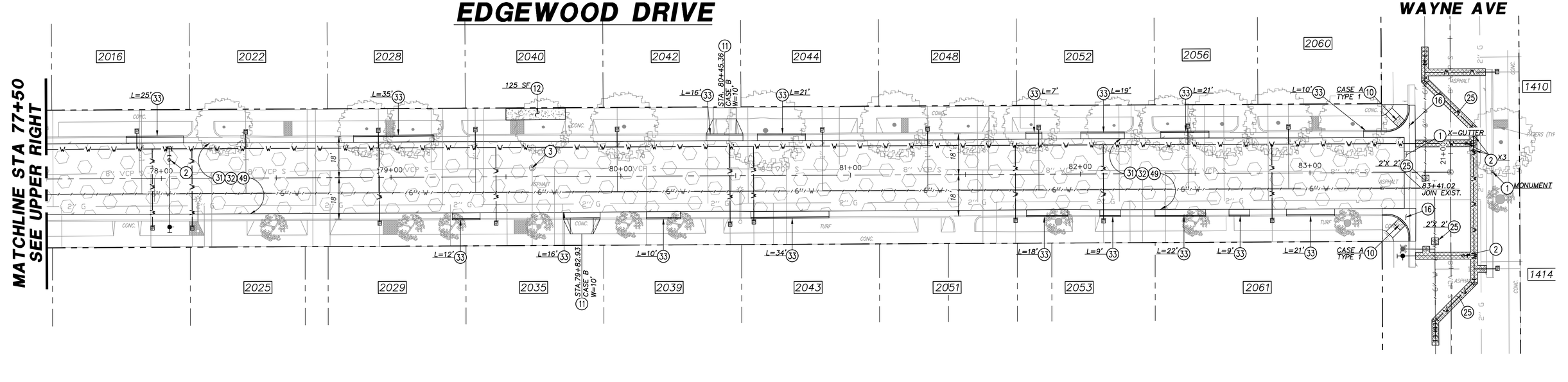

CONSTRUCTION NOTES

1. PROTECT IN PLACE.
2. ADJUST VALVE CAN AND LID TO FINISHED SURFACE.
3. ADJUST EXISTING MANHOLE AND COVER TO FINISHED SURFACE.
10. SAWCUT AND REMOVE EXISTING P.C.C. SIDEWALK, CURB RAMP AND CURB & GUTTER. CONSTRUCT PCC CURB RAMP PER SPPWC 111–5, CASE AND TYPE PER PLAN. INCLUDES 2' MINIMUM FULL DEPTH AC REPLACEMENT. INCREASE AS NECESSARY TO PROVIDE 4'X4', 5% MAXIMUM SLOPE ON BOTTOM.
11. SAWCUT AND REMOVE EXISTING P.C.C. DRIVEWAY. CONSTRUCT DRIVEWAY PER SPPWC 110–2, TYPE PER PLAN.
12. SAWCUT AND REMOVE EXISTING P.C.C. SIDEWALK. CONSTRUCT 4" THICK P.C.C. SIDEWALK PER SPPWC 112–2 & 113–2.
16. SAWCUT AND REMOVE EXISTING EXISTING PCC CROSS GUTTER. CONSTRUCT CROSS GUTTER PER SPPWC STD. PLAN 122–3. INCLUDES 2' FULL DEPTH AC REPLACEMENT.
25. SAWCUT AND REMOVE EXISTING AC AND SUBGRADE. CONSTRUCT 6" FULL–DEPTH AC REPAIR.
26. SAWCUT AND REMOVE EXISTING PCC CURB AND GUTTER. CONSTRUCT 8" CURB AND 30" GUTTER PER SPPWC STD. PLAN 120–3. INCLUDES 2' FULL DEPTH AC REPLACEMENT.
28. REPLACE CURB DRAIN PER SPPWC 150–4.
31. REMOVE EXISTING AC.
32. CONSTRUCT 4" AC PAVEMENT (2.5" B, 1.5" C2)
33. SAWCUT AND REMOVE EXISTING PCC CURB AND GUTTER. CONSTRUCT 6" PCC CURB AND 30" GUTTER PER SPPWC STD. PLAN 120–3. INCLUDES 2' DEPTH AC REPAIR.
36. COLD MILL TO A DEPTH OF 1.5".
37. CONSTRUCT 1.5" AC OVERLAY, C2.
47. SAWCUT AND REMOVE EXISTING GUTTER. CONSTRUCT 30" GUTTER PER SPPWC STD. PLAN 120–3. INCLUDES 2' FULL DEPTH AC REPLACEMENT.
49. REMOVE SUBGRADE (UNCLASSIFIED EXCAVATION).
56. TIE OUT, RESET, AND RECORD MONUMENT.

LEGEND

- REMOVE EXISITNG AC AND SUBGRADE. CONSTRUCT 4" AC (2.5" B, 1.5" C2).
- 1.5" COLD MILL & 1.5" AC OVERLAY, C2
- CONSTRUCT 6" FULL–DEPTH AC REPAIR.
- SAWCUT AND REMOVE EXISTING P.C.C. SIDEWALK. CONSTRUCT 4" THICK P.C.C. SIDEWALK.

RKA NORTH

20' 10' 0' 20' 40'

GRAPHIC SCALE: 1"=20'

NOTE:
HORIZONTAL AND VERTICAL LOCATIONS TO BE VERIFIED IN THE FIELD AND ENGINEER NOTIFIED OF ANY DISCREPANCIES PRIOR TO CONSTRUCTION.

811 Know what's Call below. before you dig.

BASIS OF BEARING.
THE BEARINGS AND COORDINATES HEREON ARE BASED ON THE CALIFORNIA COORDINATE SYSTEM OF 1983 (NAD83), ZONE 5 DATUM, BASED LOCALLY ON A LINE BETWEEN NGS CONTROL POINTS EV3794 AND EV3841, BEING N84°35'29"W, 1991.35 EPOCH.

BENCHMARK.
LOS ANGELES COUNTY PUBLIC WORKS BENCH MARK NO. 1G4120.
DESCRIPTION: (SBM MON IN S. END C.B. 5FT N/O BCR @ NE COR. SAN GABRIEL BLVD & HUNTINGTON DR MKD (BM 10–5A 1966).
ELEVATION = 601.950

Δ	DATE	DESCRIPTION	APP'D	DATE

REVISIONS

CITY OF SOUTH PASADENA

APPROVED BY: _____ DATE

REGISTERED PROFESSIONAL ENGINEER — KURT R. PEDERSEN — NO. 69745 — CIVIL — STATE OF CALIFORNIA

RKA CONSULTING GROUP
398 S. LEMON CREEK DRIVE - SUITE E-WALNUT-CA-91789
(909) 594-9702-FAX (909) 594-2658
WWW.RKAGROUP.COM

5-13-26
KURT R. PEDERSEN RCE 69745 DATE

CITY OF SOUTH PASADENA

FY2019-20 STREET & WATER IMP.

STREET IMPROVEMENT
EDGEWOOD DRIVE

STREET & WATER IMPROVEMENT PROJECT

SHEET 9 OF 33 SHEETS

DESIGNED BY:
DRAWN BY:
REVIEWED BY: KRP
JOB NO.: 323007
DRAWING NAME: \ACAD\323007\DWG\LSTR09.DWG
PLAN SET: FY19–20 STREET IMPROVEMENT PROJECT
LATEST MYLAR REVISION DATE: X
DRAWING LAST UPDATED: 2024–10–17
MYLAR PLOT DATE: X

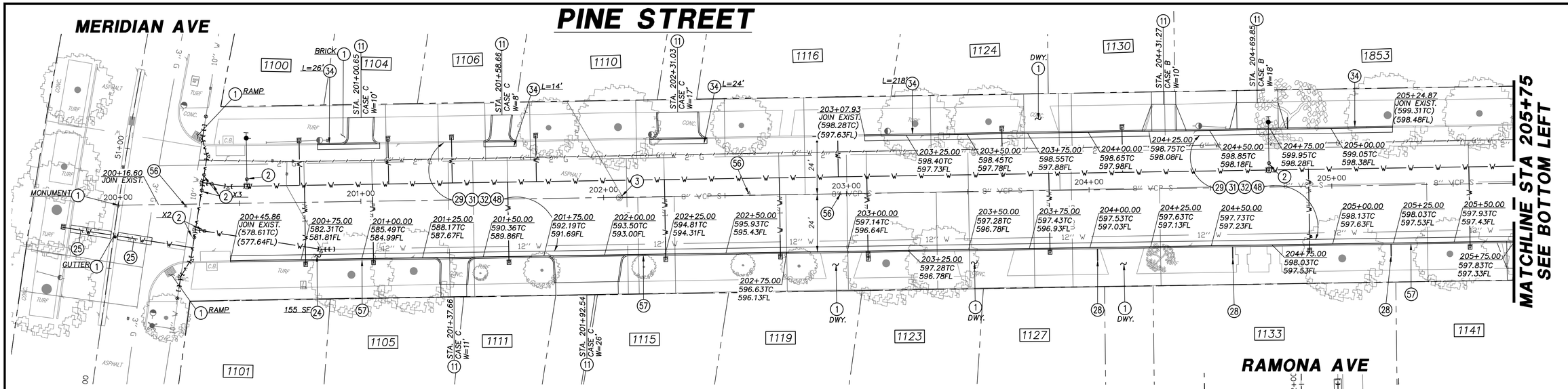

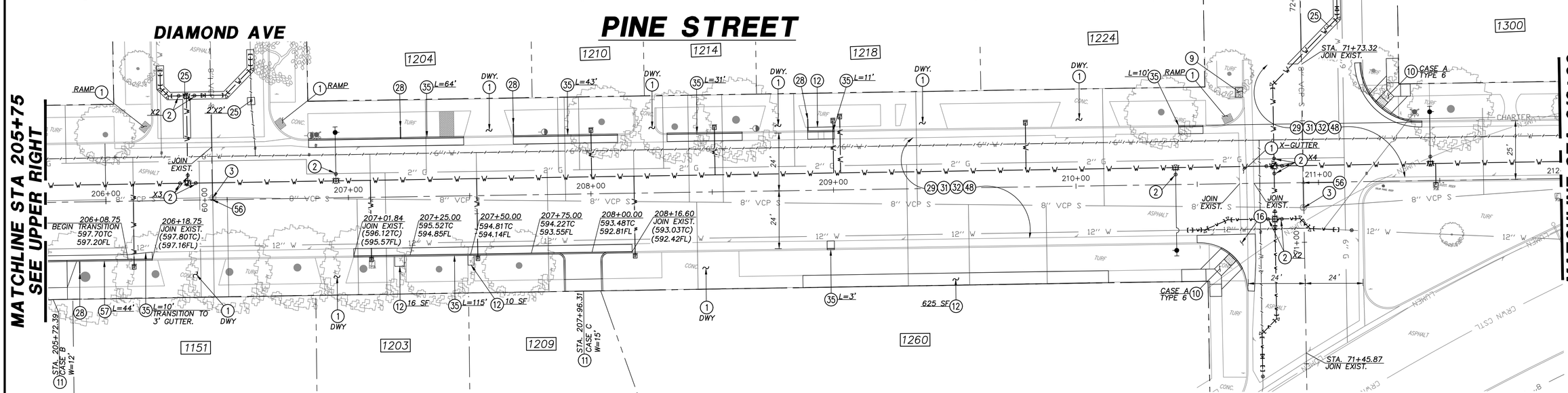

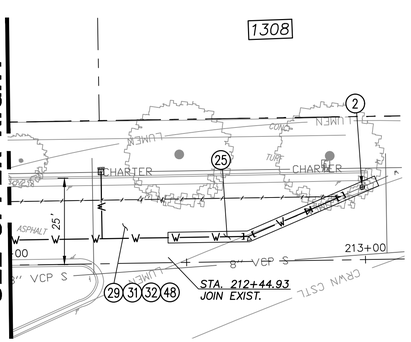

NOTE:
HORIZONTAL AND VERTICAL LOCATIONS TO BE VERIFIED IN THE FIELD AND ENGINEER NOTIFIED OF ANY DISCREPANCIES PRIOR TO CONSTRUCTION.

LEGEND

- CONSTRUCT 4" AC (2.5" B, 1.5" C2) ON 3" CMB.
- CONSTRUCT 6" FULL-DEPTH AC REPAIR.
- SAWCUT AND REMOVE EXISTING P.C.C. SIDEWALK. CONSTRUCT 4" THICK P.C.C. SIDEWALK.

RKA NORTH

20' 10' 0' 20' 40'

GRAPHIC SCALE: 1"=20'

CONSTRUCTION NOTES

1. PROTECT IN PLACE.
2. ADJUST VALVE CAN AND LID TO FINISHED SURFACE.
3. ADJUST EXISTING MANHOLE AND COVER TO FINISHED SURFACE.
9. INSTALL GLUE DOWN DETECTABLE WARNING SURFACE. BOLT DOWN AT CORNERS.
10. SAWCUT AND REMOVE EXISTING P.C.C. SIDEWALK, CURB RAMP AND CURB & GUTTER. CONSTRUCT PCC CURB RAMP PER SPPWC 111-5, CASE AND TYPE PER PLAN. INCLUDES 2' MINIMUM FULL DEPTH AC REPLACEMENT. INCREASE AS NECESSARY TO PROVIDE 4'X4', 5% MAXIMUM SLOPE ON BOTTOM.
11. SAWCUT AND REMOVE EXISTING P.C.C. DRIVEWAY. CONSTRUCT DRIVEWAY PER SPPWC 110-2, TYPE PER PLAN.
12. SAWCUT AND REMOVE EXISTING P.C.C. SIDEWALK. CONSTRUCT 4" THICK P.C.C. SIDEWALK PER SPPWC 112-2 & 113-2.
16. SAWCUT AND REMOVE EXISTING EXISTING PCC CROSS GUTTER. CONSTRUCT CROSS GUTTER PER SPPWC STD. PLAN 122-3. INCLUDES 2' FULL DEPTH AC REPLACEMENT.
24. REMOVE TREE ROOTS PER CITY ARBORIST'S DIRECTION.
25. SAWCUT AND REMOVE EXISTING AC AND SUBGRADE. CONSTRUCT 6" FULL-DEPTH AC REPAIR.
28. REPLACE CURB DRAIN PER SPPWC 150-4.
29. REMOVE EXISTING MACADAM AND SUBGRADE.
31. REMOVE EXISTING AC.
32. CONSTRUCT 4" AC PAVEMENT (2.5" B, 1.5" C2).
34. SAWCUT AND REMOVE EXISTING CURB. CONSTRUCT 8" PCC CURB AND 24" GUTTER PER SPPWC STD. PLAN 120-3.
35. SAWCUT AND REMOVE EXISTING CURB AND GUTTER CONSTRUCT 8" PCC CURB AND 36" GUTTER PER SPPWC STD. PLAN 120-3.
48. CONSTRUCT 3" CMB.
56. TIE OUT, RESET, AND RECORD MONUMENT.
57. SAWCUT AND REMOVE EXISTING CURB AND GUTTER CONSTRUCT 6" PCC CURB AND 24" GUTTER PER SPPWC STD. PLAN 120-3.

Know what's Call before you dig. 811

BASIS OF BEARING:
THE BEARINGS AND COORDINATES HEREON ARE BASED ON THE CALIFORNIA COORDINATE SYSTEM OF 1983 (NAD83), ZONE 5 DATUM, BASED LOCALLY ON A LINE BETWEEN NGS CONTROL POINTS EV3794 AND EV3841, BEING N84°35'29"W, 1991.35 EPOCH.

BENCHMARK:
LOS ANGELES COUNTY PUBLIC WORKS BENCH MARK NO. 1G4120.
DESCRIPTION: (SBM MON IN S. END C.B. 5FT N/O BCR @ NE COR. SAN GABRIEL BLVD & HUNTINGTON DR MKD (BM 10-5A 1966).
ELEVATION = 601.950

Δ	DATE	DESCRIPTION	APP'D	DATE

REVISIONS

CITY OF SOUTH PASADENA

APPROVED BY: _____ DATE

REGISTERED PROFESSIONAL ENGINEER — KURT R. PEDERSEN — NO. 69745 — CIVIL — STATE OF CALIFORNIA

RKA CONSULTING GROUP
398 S. LEMON CREEK DRIVE · SUITE E · WALNUT, CA · 91789
(909) 594-9702 · FAX (909) 594-2658
WWW.RKAGROUP.COM

KURT R. PEDERSEN RCE 69745 5-13-25 DATE

CITY OF SOUTH PASADENA

FY2019-20 STREET & WATER IMP.

STREET IMPROVEMENT
PINE STREET

STREET & WATER IMPROVEMENT PROJECT

SHEET 10 OF 33 SHEETS

DRAWING LAST UPDATED: 2024-10-17 PLOT DATE: X
DRAWING NAME: \ACAD\323007\DWG\LSTR3.DWG
JOB NO.: 323007
DESIGNED BY:
DRAWN BY:
REVIEWED BY: KRP
PLAN SET: FY19-20 STREET IMPROVEMENT PROJECT
LATEST MYLAR REVISION DATE: X

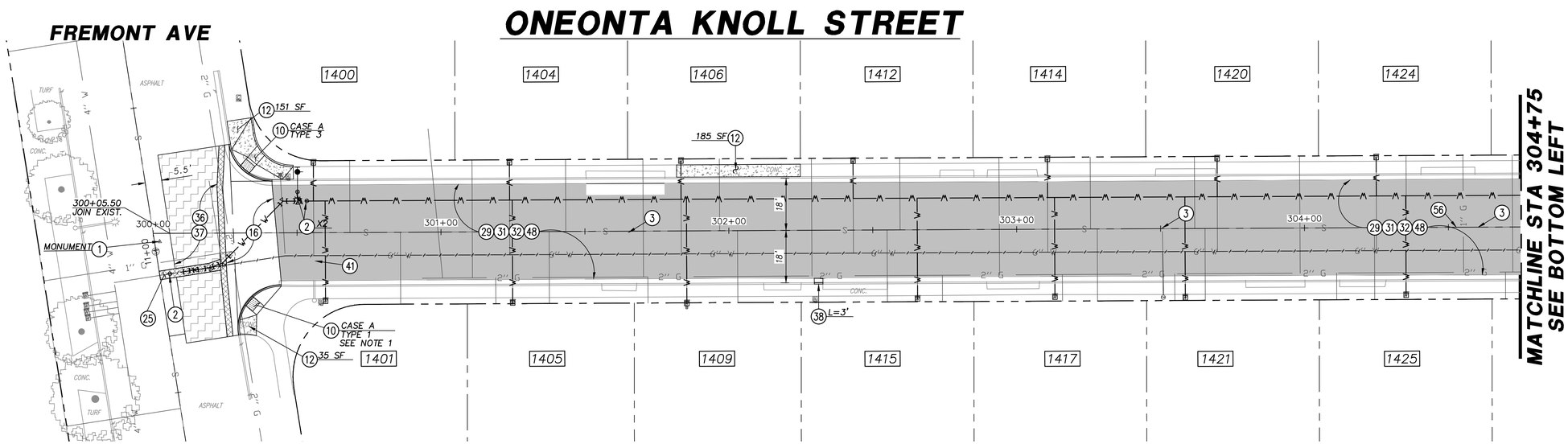

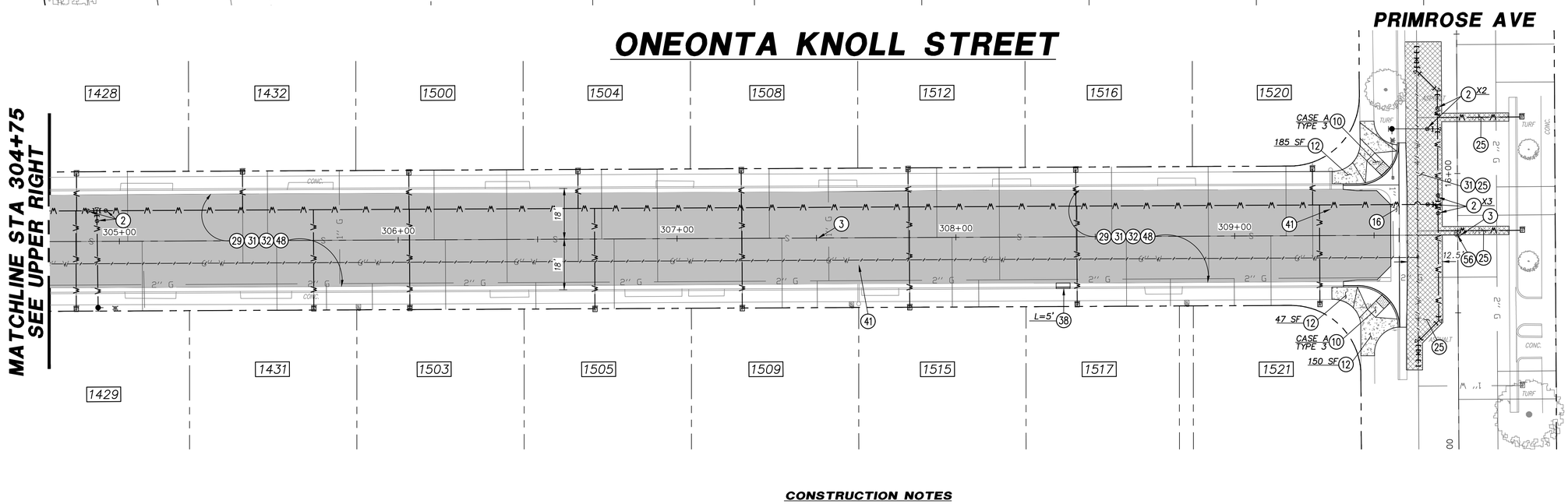

NOTES

1. STANDARD CURB RAMP IS NOT FEASIBLE DUE TO EXISTING STEEP SLOPES ON ONEONTA KNOLL STREET. REPLACE RAMP IN-KIND INCLUDING A STANDARD DETECTABLE WARNING SURFACE.

NOTE:
HORIZONTAL AND VERTICAL LOCATIONS TO BE VERIFIED IN THE FIELD AND ENGINEER NOTIFIED OF ANY DISCREPANCIES PRIOR TO CONSTRUCTION.

NORTH

20' 10' 0' 20' 40'

GRAPHIC SCALE: 1"=20'

LEGEND

- CONSTRUCT 4" AC (2.5" B, 1.5" C2) ON 3" CMB.
- 1.5" COLD MILL & 1.5" AC OVERLAY, C2
- CONSTRUCT 6" FULL-DEPTH AC REPAIR.
- SAWCUT AND REMOVE EXISTING P.C.C. SIDEWALK. CONSTRUCT 4" THICK P.C.C. SIDEWALK.

CONSTRUCTION NOTES

(1) PROTECT IN PLACE.
(2) ADJUST VALVE CAN AND LID TO FINISHED SURFACE.
(3) ADJUST EXISTING MANHOLE AND COVER TO FINISHED SURFACE.
(10) SAWCUT AND REMOVE EXISTING P.C.C. SIDEWALK, CURB RAMP AND CURB & GUTTER. CONSTRUCT PCC CURB RAMP PER SPPWC 111-5, CASE AND TYPE PER PLAN. INCLUDES 2' MINIMUM FULL DEPTH AC REPLACEMENT. INCREASE AS NECESSARY TO PROVIDE 4'X4', 5% MAXIMUM SLOPE ON BOTTOM.
(12) SAWCUT AND REMOVE EXISTING P.C.C. SIDEWALK. CONSTRUCT 4" THICK P.C.C. SIDEWALK PER SPPWC 112-2 & 113-2.
(16) SAWCUT AND REMOVE EXISTING EXISTING PCC CROSS GUTTER. CONSTRUCT CROSS GUTTER PER SPPWC STD. PLAN 122-3. INCLUDES 2' FULL DEPTH AC REPLACEMENT.
(25) SAWCUT AND REMOVE EXISTING AC AND SUBGRADE. CONSTRUCT 6" FULL-DEPTH AC REPAIR.
(29) REMOVE EXISTING MACADAM AND SUBGRADE.
(31) REMOVE EXISTING AC.
(32) CONSTRUCT 4" AC PAVEMENT (2.5" B, 1.5" C2).
(36) COLD MILL TO A DEPTH OF 1.5".
(37) CONSTRUCT 1.5" AC OVERLAY, C2.
(38) SAWCUT AND REMOVE EXISTING PCC ROLLED CURB. CONTRUCT PCC ROLLED CURB TO TO MATCH IN-KIND.
(41) SALVAGE EXISTING HPS COBRA HEAD AND INSTALL NEW LED COBRA HEAD ASSEMBLY.
(48) CONSTRUCT 3" CMB.
(56) TIE OUT, RESET, AND RECORD MONUMENT.

811 Know what's Call below. before you dig.

BASIS OF BEARING:
THE BEARINGS AND COORDINATES HEREON ARE BASED ON THE CALIFORNIA COORDINATE SYSTEM OF 1983 (NAD83), ZONE 5 DATUM, BASED LOCALLY ON A LINE BETWEEN NGS CONTROL POINTS EV3794 AND EV3841, BEING N84°35'29"W, 1991.35 EPOCH.

BENCHMARK:
LOS ANGELES COUNTY PUBLIC WORKS BENCH MARK NO. 1G4120.
DESCRIPTION: (SBM MON IN S. END C.B. 5FT N/O BCR @ NE COR. SAN GABRIEL BLVD & HUNTINGTON DR MKD (BM 10-5A 1966).
ELEVATION = 601.950

Δ	DATE	DESCRIPTION	APP'D	DATE

REVISIONS

CITY OF SOUTH PASADENA

APPROVED BY: _____ DATE

REGISTERED PROFESSIONAL ENGINEER — KURT R. PEDERSEN — NO. 69745 — CIVIL — STATE OF CALIFORNIA

RKA CONSULTING GROUP
398 S. LEMON CREEK DRIVE-SUITE E-WALNUT-CA-91789
(909) 594-9702-FAX (909) 594-2658
WWW.RKAGROUP.COM

5-13-25
KURT R. PEDERSEN RCE 69745 DATE

CITY OF SOUTH PASADENA

FY2019-20 STREET & WATER IMP.

STREET IMPROVEMENT
ONEONTA KNOLL STREET

STREET & WATER IMPROVEMENT PROJECT

SHEET 11 OF 33 SHEETS

DESIGNED BY:
DRAWN BY:
REVIEWED BY: KRP
JOB NO.: 323007
DRAWING NAME: \ACAD\323007\DWG\LSTR10.DWG
PLAN SET: FY19-20 STREET IMPROVEMENT PROJECT
LATEST MYLAR REVISION DATE: X
DRAWING LAST UPDATED: 2024-10-17
MYLAR PLOT DATE: X

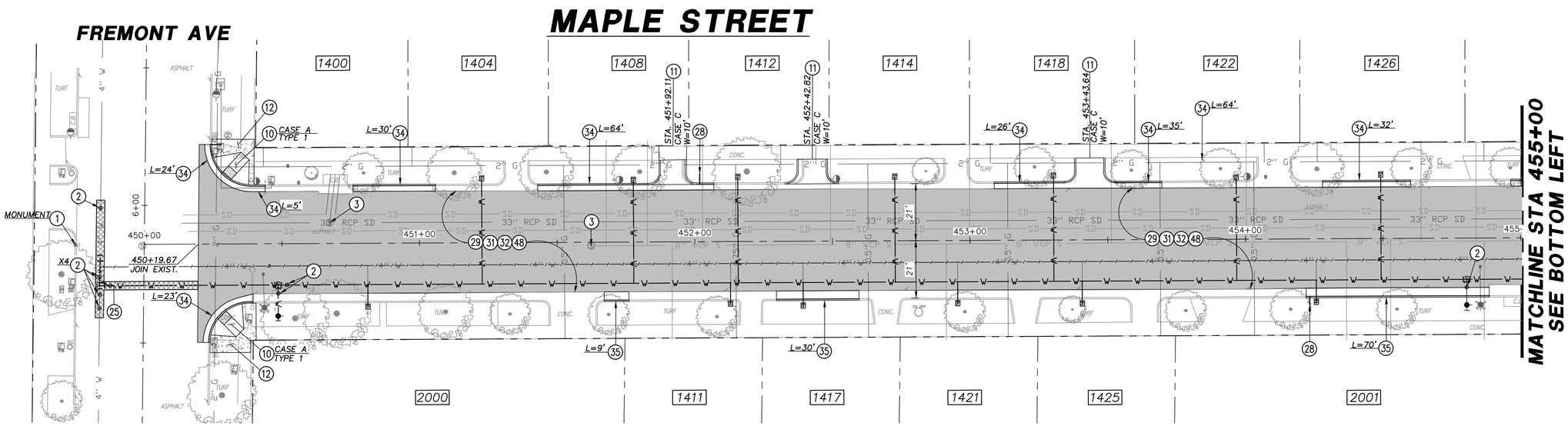

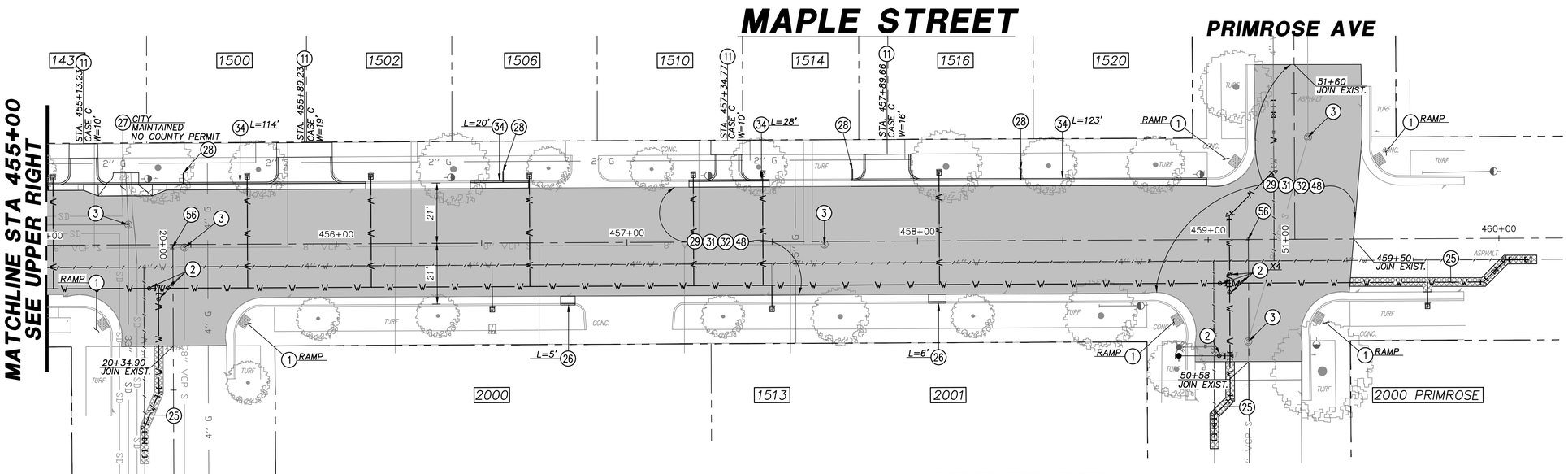

NOTES

FROM APPROXIMATELY 453+00 TO 457+00 THE REMOVAL OF THE MACADAM WILL LEAVE THE SUBGRADE UP TO 1.5" TOO LOW. INCREASE CMB THICKNESS IN THIS AREA.

NOTE:
HORIZONTAL AND VERTICAL LOCATIONS TO BE VERIFIED IN THE FIELD AND ENGINEER NOTIFIED OF ANY DISCREPANCIES PRIOR TO CONSTRUCTION.

RKA NORTH

20' 10' 0' 20' 40'

GRAPHIC SCALE: 1"=20'

LEGEND

- CONSTRUCT 4" AC (2.5" B, 1.5" C2) ON 3" CMB.
- CONSTRUCT 6" FULL-DEPTH AC REPAIR.
- SAWCUT AND REMOVE EXISTING P.C.C. SIDEWALK. CONSTRUCT 4" THICK P.C.C. SIDEWALK.

CONSTRUCTION NOTES

1. PROTECT IN PLACE.
2. ADJUST VALVE CAN AND LID TO FINISHED SURFACE.
3. ADJUST EXISTING MANHOLE AND COVER TO FINISHED SURFACE.
10. SAWCUT AND REMOVE EXISTING P.C.C. SIDEWALK, CURB RAMP AND CURB & GUTTER. CONSTRUCT PCC CURB RAMP PER SPPWC 111-5, CASE AND TYPE PER PLAN. INCLUDES 2' MINIMUM FULL DEPTH AC REPLACEMENT. INCREASE AS NECESSARY TO PROVIDE 4'X4', 5% MAXIMUM SLOPE ON BOTTOM.
11. SAWCUT AND REMOVE EXISTING P.C.C. DRIVEWAY. CONSTRUCT DRIVEWAY PER SPPWC 110-2, TYPE PER PLAN.
12. SAWCUT AND REMOVE EXISTING P.C.C. SIDEWALK. CONSTRUCT 4" THICK P.C.C. SIDEWALK PER SPPWC 112-2 & 113-2.
25. SAWCUT AND REMOVE EXISTING AC AND SUBGRADE. CONSTRUCT 6" FULL-DEPTH AC REPAIR.
26. SAWCUT AND REMOVE EXISTING PCC CURB AND GUTTER. CONSTRUCT 8" CURB AND 30" GUTTER PER SPPWC STD. PLAN 120-3. INCLUDES 2' FULL DEPTH AC REPLACEMENT.
27. SAWCUT AND REMOVE EXISTING PCC LOCAL DEPRESSION PER SPPWC STD. PLAN 313-4, MODIFIED TO MATCH EXISTING. INCLUDES 2' FULL DEPTH AC REPAIR.
28. REPLACE CURB DRAIN PER SPPWC 150-4.
29. REMOVE EXISTING MACADAM AND SUBGRADE.
31. REMOVE EXISTING AC.
32. CONSTRUCT 4" AC PAVEMENT (2.5" B, 1.5" C2).
34. SAWCUT AND REMOVE EXISTING CURB. CONSTRUCT 8" PCC CURB AND 24" GUTTER PER SPPWC STD. PLAN 120-3. INCLUDES 2' FULL DEPTH AC REPAIR.
35. SAWCUT AND REMOVE EXISTING CURB AND GUTTER CONSTRUCT 8" PCC CURB AND 36" GUTTER PER SPPWC STD. PLAN 120-3. INCLUDES 2' FULL DEPTH AC REPAIR.
48. CONSTRUCT 3" CMB.
56. TIE OUT, RESET, AND RECORD MONUMENT.

811 Know what's below. Call before you dig.

BASIS OF BEARING:
THE BEARINGS AND COORDINATES HEREON ARE BASED ON THE CALIFORNIA COORDINATE SYSTEM OF 1983 (NAD83), ZONE 5 DATUM, BASED LOCALLY ON A LINE BETWEEN NGS CONTROL POINTS EV3794 AND EV3841, BEING N84°35'29"W, 1991.35 EPOCH.

BENCHMARK:
LOS ANGELES COUNTY PUBLIC WORKS BENCH MARK NO. 1G4120.
DESCRIPTION: (SBM MON IN S. END C.B. 5FT N/O BCR @ NE COR. SAN GABRIEL BLVD & HUNTINGTON DR MKD (BM 10-5A 1966).
ELEVATION = 601.950

Δ	DATE	DESCRIPTION	APP'D	DATE

REVISIONS

CITY OF SOUTH PASADENA

APPROVED BY: _____ DATE

REGISTERED PROFESSIONAL ENGINEER — KURT R. PEDERSEN — NO. 69745 — CIVIL — STATE OF CALIFORNIA

RKA CONSULTING GROUP
398 S. LEMON CREEK DRIVE - SUITE E WALNUT, CA 91789
(909) 594-9702 - FAX (909) 594-2658
WWW.RKAGROUP.COM

5-13-25
KURT R. PEDERSEN RCE 69745 DATE

CITY OF SOUTH PASADENA

FY2019-20 STREET & WATER IMP.
STREET IMPROVEMENT
MAPLE STREET
FROM FREEMONT AVE TO PRIMEROSE AVE
STREET & WATER IMPROVEMENT PROJECT

SHEET 12 OF 33 SHEETS

DESIGNED BY:
DRAWN BY:
REVIEWED BY: KRP
JOB NO.: 323007
DRAWING NAME: \ACAD\323007\DWG\LST11.DWG
PLAN SET: FY19-20 STREET IMPROVEMENT PROJECT
LATEST MYLAR REVISION DATE: X
DRAWING LAST UPDATED: 2024-10-17
MYLAR PLOT DATE: X

MAPLE STREET

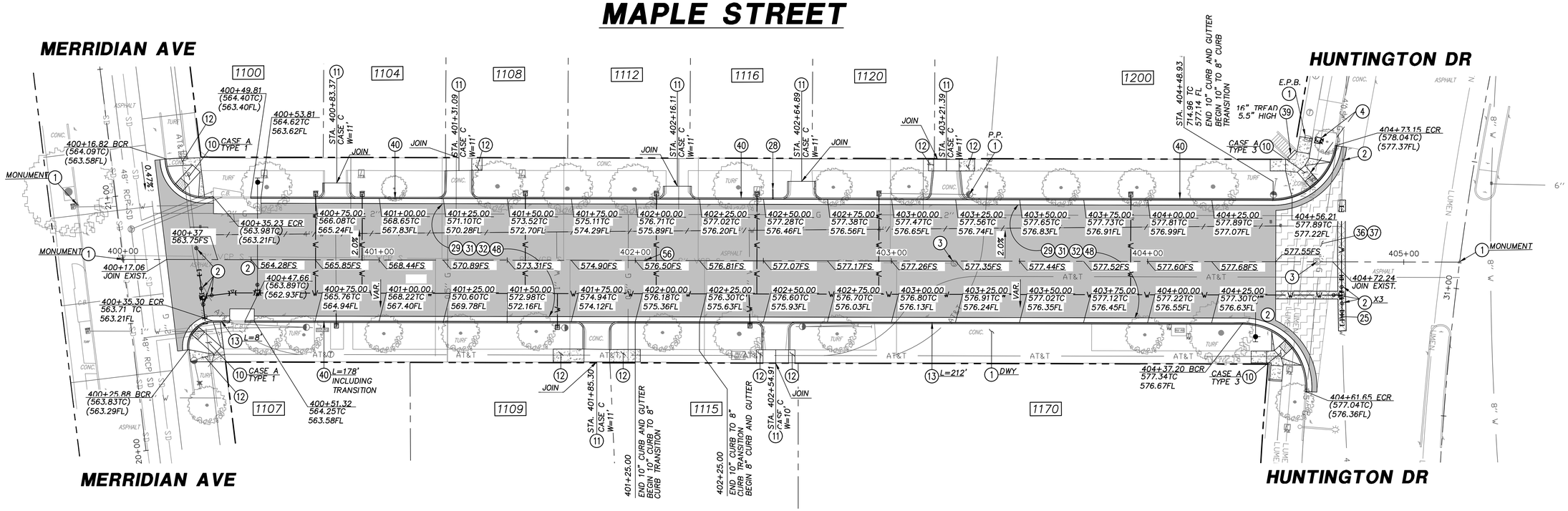

CONSTRUCTION NOTES

1. PROTECT IN PLACE.
2. ADJUST VALVE CAN AND LID TO FINISHED SURFACE.
3. ADJUST EXISTING MANHOLE AND COVER TO FINISHED SURFACE.
4. ADJUST EXISTING PULLBOX AND COVER TO FINISHED SURFACE.
10. SAWCUT AND REMOVE EXISTING P.C.C. SIDEWALK, CURB RAMP AND CURB & GUTTER. CONSTRUCT PCC CURB RAMP PER SPPWC 111-5, CASE AND TYPE PER PLAN. INCLUDES 2' MINIMUM FULL DEPTH AC REPLACEMENT. INCREASE AS NECESSARY TO PROVIDE 4'X4', 5% MAXIMUM SLOPE ON BOTTOM.
11. SAWCUT AND REMOVE EXISTING P.C.C. DRIVEWAY. CONSTRUCT DRIVEWAY PER SPPWC 110-2, TYPE PER PLAN.
12. SAWCUT AND REMOVE EXISTING P.C.C. SIDEWALK. CONSTRUCT 4" THICK P.C.C. SIDEWALK PER SPPWC 112-2 & 113-2.
13. SAWCUT AND REMOVE P.C.C. CURB AND GUTTER. CONSTRUCT 8" CURB AND 24" GUTTER PER SPPWC STD. PLAN 120-3.
25. SAWCUT AND REMOVE EXISTING AC AND SUBGRADE. CONSTRUCT 6" FULL-DEPTH AC REPAIR.
28. REPLACE CURB DRAIN PER SPPWC 150-4.
29. REMOVE EXISTING MACADAM AND SUBGRADE.
31. REMOVE EXISTING AC.
32. CONSTRUCT 4" AC PAVEMENT (2.5" B, 1.5" C2)
36. COLD MILL TO A DEPTH OF 1.5".
37. CONSTRUCT 1.5" AC OVERLAY, C2.
39. CONSTRUCT ONE STEP. MATCH STEP HEIGHT OF EXISTING STEPS.
40. SAWCUT AND REMOVE EXISTING PCC CURB AND GUTTER. CONSTRUCT 10" CURB AND 24" GUTTER PER SPPWC STD. PLAN 120-3.
48. CONSTRUCT 3" CMB.
56. TIE OUT, RESET, AND RECORD MONUMENT.

LEGEND

- CONSTRUCT 4" AC (2.5" B, 1.5" C2) ON 3" CMB.
- 1.5" COLD MILL & 1.5" AC OVERLAY, C2
- CONSTRUCT 6" FULL-DEPTH AC REPAIR.
- SAWCUT AND REMOVE EXISTING P.C.C. SIDEWALK. CONSTRUCT 4" THICK P.C.C. SIDEWALK.

RKA NORTH

20' 10' 0' 20' 40'

GRAPHIC SCALE: 1"=20'

NOTE:
HORIZONTAL AND VERTICAL LOCATIONS TO BE VERIFIED IN THE FIELD AND ENGINEER NOTIFIED OF ANY DISCREPANCIES PRIOR TO CONSTRUCTION.

811 Know what's below. Call before you dig.

BASIS OF BEARING:
THE BEARINGS AND COORDINATES HEREON ARE BASED ON THE CALIFORNIA COORDINATE SYSTEM OF 1983 (NAD83), ZONE 5 DATUM, BASED LOCALLY ON A LINE BETWEEN NGS CONTROL POINTS EV3794 AND EV3841, BEING N84°35'29"W, 1991.35 EPOCH.

BENCHMARK:
LOS ANGELES COUNTY PUBLIC WORKS BENCH MARK NO. 1G4120.
DESCRIPTION: (SBM MON IN S. END C.B. 5FT N/O BCR @ NE COR. SAN GABRIEL BLVD & HUNTINGTON DR MKD (BM 10-5A 1966).
ELEVATION = 601.950

Δ	DATE	DESCRIPTION	APP'D	DATE

REVISIONS

CITY OF SOUTH PASADENA

APPROVED BY: _____ DATE

REGISTERED PROFESSIONAL ENGINEER — KURT R. PEDERSEN — NO. 69745 — CIVIL — STATE OF CALIFORNIA

RKA CONSULTING GROUP
398 S. LEMON CREEK DRIVE - SUITE E - WALNUT - CA - 91789
(909) 594-9702 - FAX (909) 594-2658
WWW.RKAGROUP.COM

KURT R. PEDERSEN RCE 69745 5-13-25 DATE

CITY OF SOUTH PASADENA

FY2019-20 STREET & WATER IMP.
STREET IMPROVEMENT
MAPLE STREET
FROM MERRIDIAN AVE TO HUNTINGTON DR
STREET & WATER IMPROVEMENT PROJECT

SHEET 13 OF 33 SHEETS

DRAWING LAST UPDATED: 2024-10-17 PLAN SET: FY19-20 STREET IMPROVEMENT PROJECT
DRAWING NAME: \ACAD\323007\DWG\LSTR12.DWG LATEST MYLAR REVISION DATE: X
JOB NO.: 323007
DRAWN BY:
DESIGNED BY:
REVIEWED BY: KRP

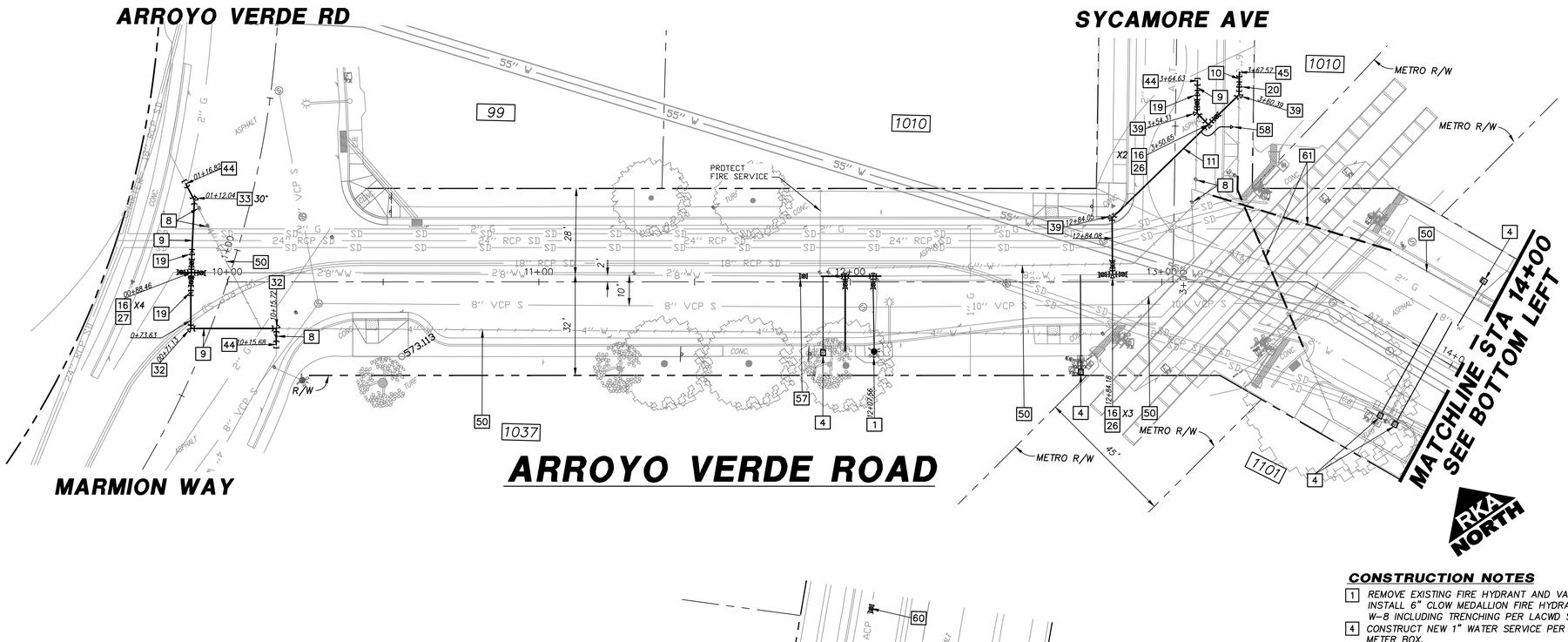

CONSTRUCTION NOTES

1. REMOVE EXISTING FIRE HYDRANT AND VALVE. ABANDON EXISTING FIRE SERVICE LATERAL. INSTALL 6" CLOW MEDALLION FIRE HYDRANT PER CITY FIRE HYDRANT ASSEMBLY DETAIL, W-8 INCLUDING TRENCHING PER LACWD STD. PLAN W-46.
4. CONSTRUCT NEW 1" WATER SERVICE PER LACWD STD. PLAN W-5. REPLACE METER AND METER BOX.
8. REMOVE EXIST. VALVE CAN AND COVER. FILL WITH C.L.S.M. UP TO A.C.. PATCH WITH HMA.
9. INSTALL 4" CL. 52, D.I.P. WATER MAIN LINE, INCLUDING TRENCHING PER LACDW STD. PLAN W-46. INCLUDES TYTON FIELD LOK 350 GASKETS WHERE LESS THAN 10' FROM SEWER MAIN.
10. INSTALL 6" CL. 52, D.I.P. WATER MAIN LINE, INCLUDING TRENCHING PER LACDW STD. PLAN W-46. INCLUDES TYTON FIELD LOK 350 GASKETS WHERE LESS THAN 10' FROM SEWER MAIN.
11. INSTALL 8" CL. 52, D.I.P. WATER MAIN LINE, INCLUDING TRENCHING PER LACDW STD. PLAN W-46. INCLUDES TYTON FIELD LOK 350 GASKETS WHERE LESS THAN 10' FROM SEWER MAIN.
15. INSTALL 6" MUELLER RESILIENT WEDGE GATE VALVE WITH VALVE BOX AND COVER PER LACWD STD. PLAN W-15.
16. INSTALL 8" MUELLER RESILIENT WEDGE GATE VALVE WITH VALVE BOX AND COVER PER LACWD STD. PLAN W-15.
19. INSTALL 8"x4" REDUCER.
20. INSTALL 8"x6" REDUCER.
23. INSTALL 6"x6"x6" TEE WITH THRUST BLOCK PER LACWD STD. PLAN W-21.
26. INSTALL 8"x8"x8" TEE WITH THRUST BLOCK PER LACWD STD. PLAN W-21.
27. INSTALL 8"x8"x8"x8 CROSS WITH THRUST BLOCK PER LACWD STD. PLAN W-21.
32. INSTALL 4" MJxMJ 90° BEND WITH THRUST BLOCK PER LACWD STD. PLAN W-21.
33. INSTALL 4" MJxMJ CUSTOM ANGLED BEND WITH THRUST BLOCK PER LACWD STD. PLAN W-21
36. INSTALL 6" MJxMJ 45° BEND WITH THRUST BLOCK PER LACWD STD. PLAN W-21.
39. INSTALL 8" MJxMJ 45° BEND WITH THRUST BLOCK PER LACWD STD. PLAN W-21.
44. INSTALL 4" MJxMJ COUPLING.
45. INSTALL 6" MJxMJ COUPLING.
50. ABANDON AND SEAL EXISTING WATER SYSTEM IN PLACE AND CUT, PLUG, AND CEMENT EXISTING PIPE END PER LACWD STD. PLAN W-22
52. INSTALL 6" LINE STOP.
56. INSTALL 18"x8"x18"x8" CROSS WITH THRUST BLOCK PER LACWD STD. PLAN W-21.
57. INSTALL 8" LINE STOP.
58. INSTALL 2" AIR-RELEASE AND VACUUM VALVE ASSEMBLY PER LACWD STD. PLAN W-16. REPLACE ENTIRE SIDEWALK PANEL IF DAMAGED.
59. INSTALL 6" MJxMJ 90° BEND WITH THRUST BLOCK PER LACWD STD. PLAN W-21.
60. INSTALL 18" LINE STOP.
61. FILL ABANDONED WATER LINES UNDER TRACKS, EXTENDING 10' BEYOND RAILROAD GATES WITH CELLCRETE.
62. REMOVE EXISTING FIRE SERVICE METER AND VAULT. INSTALL AMES 1000DCV-CFM 6 CHECK VALVE AND TWO (2) 6" MUELLER RESILIENT WEDGE GATE VALVES (BID ITEM INCLUDES VALVES) IN AN ARMORCAST 48"x60"x36" RPM VAULT WITH TWO POLYMER CONCRETE COVER LIDS, WITH ONE 9"x14" DROP IN LID, BOLT DOWN, AND "WATER" LOGO.

NOTE:
HORIZONTAL AND VERTICAL LOCATIONS TO BE VERIFIED IN THE FIELD AND ENGINEER NOTIFIED OF ANY DISCREPANCIES PRIOR TO CONSTRUCTION.

811 Know what's below. Call before you dig.

BASIS OF BEARING:
THE BEARINGS AND COORDINATES HEREON ARE BASED ON THE CALIFORNIA COORDINATE SYSTEM OF 1983 (NAD83), ZONE 5 DATUM, BASED LOCALLY ON A LINE BETWEEN NGS CONTROL POINTS EV3794 AND EV3841, BEING N84°35'29"W, 1991.35 EPOCH.

BENCHMARK:
LOS ANGELES COUNTY PUBLIC WORKS BENCH MARK NO. 1C4120.
DESCRIPTION: (SBM MON IN S. END C.B. 5FT N/O BCR @ NE COR. SAN GABRIEL BLVD & HUNTINGTON DR MKD (BM 10-5A 1966).
ELEVATION = 601.950

Δ	DATE	DESCRIPTION	APP'D	DATE

REVISIONS

CITY OF SOUTH PASADENA

APPROVED BY: _____ DATE

REGISTERED PROFESSIONAL ENGINEER — KURT R. PEDERSEN — NO. 69745 — CIVIL — STATE OF CALIFORNIA

RKA CONSULTING GROUP
398 S. LEMON CREEK DRIVE - SUITE E WALNUT, CA 91789
(909) 594-9702 - FAX (909) 594-2658
WWW.RKAGROUP.COM

5-13-25
KURT R. PEDERSEN RCE 69745 DATE

CITY OF SOUTH PASADENA

FY2019-20 STREET & WATER IMP.

WATER IMPROVEMENT
ARROYO VERDE ROAD

STREET & WATER IMPROVEMENT PROJECT

SHEET 14 OF 33 SHEETS

REVIEWED BY: KRP
DRAWN BY:
DESIGNED BY:
DRAWING NAME: \ACAD\323007\DWG\LSTR13.DWG
JOB NO.: 323007
PLAN SET: FY19-20 STREET IMPROVEMENT PROJECT
LATEST MYLAR REVISION DATE: X
DRAWING LAST UPDATED: 2024-10-17
MYLAR PLOT DATE: X

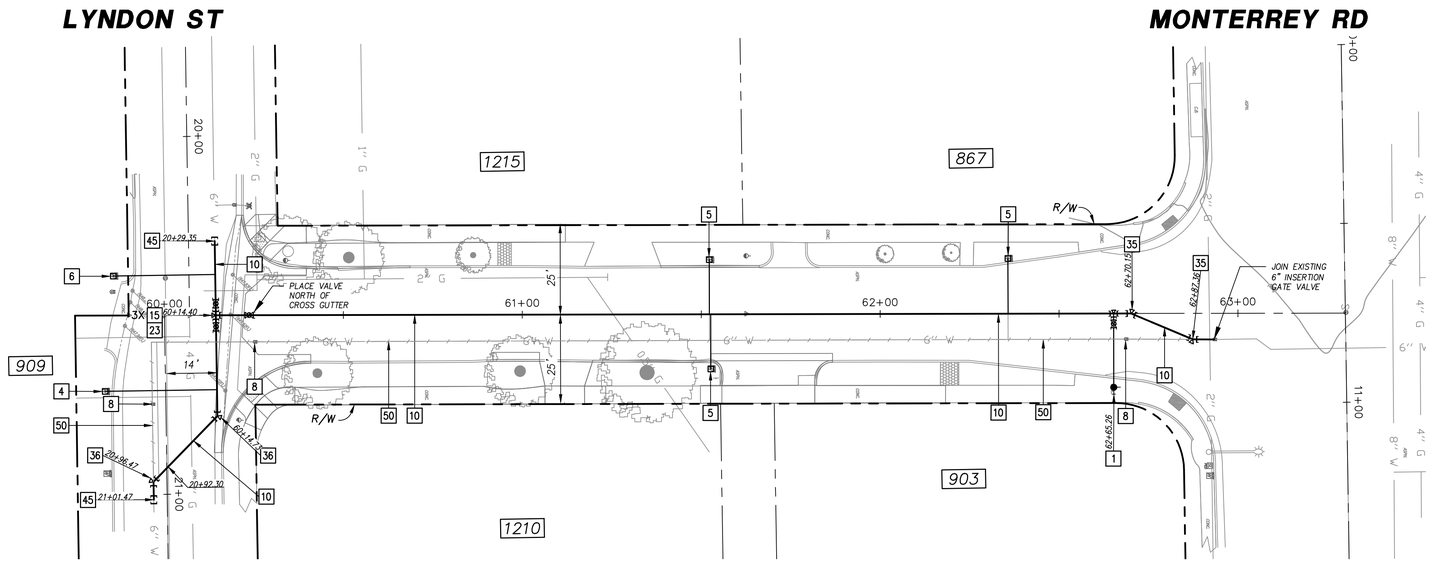

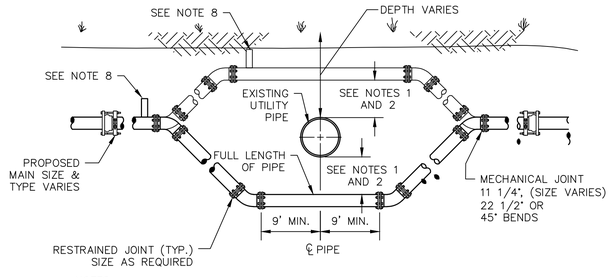

NOTES:
1. NEW OR RELOCATED, UNDERGROUND WATER MAINS CROSSING ANY EXISTING OR PROPOSED GRAVITY OR VACUUM SANITARY SEWER OR STORM SEWER SHALL BE LAID SO THE OUTSIDE OF THE MAIN IS AT LEAST SIX INCHES, ABOVE OR AT LEAST TWELVE INCHES, BELOW THE OUTSIDE OF THE OTHER PIPELINE. HOWEVER, IT IS PREFERABLE TO LAY THE WATER MAIN ABOVE THE OTHER PIPELINE.
2. NEW OR RELOCATED, UNDERGROUND WATER MAINS, CROSSING ANY EXISTING OR PROPOSED PRESSURE SANITARY SEWER, WASTEWATER OR STORM WATER FORCE MAIN, OR RECLAIMED WATER MAIN SHALL BE LAID SO THE OUTSIDE OF THE WATER MAIN IS AT LEAST TWELVE INCHES ABOVE OR BELOW THE OUTSIDE OF THE OTHER PIPELINE, HOWEVER, IT IS PREFERABLE TO LAY THE WATER MAIN ABOVE THE OTHER PIPELINE.
3. ALL FITTINGS SHALL BE MECHANICALLY RESTRAINED.
4. LENGTH SHALL BE DETERMINED BY NEXT EXISTING JOINT.
5. LENGTH, DEPTH AND HEIGHT SHALL BE DETERMINED FROM FIELD MEASUREMENTS.
6. APPLY CITY APPROVED COATING TO ALL NUTS AND BOLTS.
7. BACKFILL SHALL BE 1 SACK SLURRY AND CONFORM TO THE SPECIFICATIONS.
8. 2" AIR/VAC ASSEMBLY PER LACWD STD. PLAN W-16 ARE INSTALLED AT HIGH POINTS OR ANYWHERE AIR CAN BE TRAPPED THUS REDUCING THE CARRYING CAPACITY OF THE PIPELINE.
9. ALL PIPE FITTINGS SHALL BE DUCTILE IRON CLASS 350.

OVERCROSSING & UNDERCROSSING DETAIL

(FOR INCIDENTAL PURPOSES)
NTS

CONSTRUCTION NOTES

1. *REMOVE EXISTING FIRE HYDRANT AND VALVE. ABANDON EXISTING FIRE SERVICE LATERAL. INSTALL 6" CLOW MEDALLION FIRE HYDRANT PER CITY FIRE HYDRANT ASSEMBLY DETAIL, W-8 INCLUDING TRENCHING PER LACWD STD. PLAN W-46.*
4. *CONSTRUCT NEW 1" WATER SERVICE PER LACWD STD. PLAN W-5. REPLACE METER AND METER BOX.*
5. *CONSTRUCT NEW 1" WATER SERVICE PER LACWD STD. PLAN W-5. REPLACE METER AND METER BOX. INSTALL 1" TO 3/4" BUSHING.*
6. *CONSTRUCT NEW 1.5" WATER SERVICE PER LACWD STD. PLAN W-5. REPLACE METER AND METER BOX.*
8. *REMOVE EXIST. VALVE CAN AND COVER. FILL WITH C.L.S.M. UP TO A.C.. PATCH WITH HMA.*
10. *INSTALL 6" CL. 52, D.I.P. WATER MAIN LINE, INCLUDING TRENCHING PER LACDW STD. PLAN W-46. INCLUDES TYTON FIELD LOK 350 GASKETS WHERE LESS THAN 10' FROM SEWER MAIN.*
15. *INSTALL 6" MUELLER RESILIENT WEDGE GATE VALVE WITH VALVE BOX AND COVER PER LACWD STD. PLAN W-15.*
23. *INSTALL 6"x6"x6" TEE WITH THRUST BLOCK PER LACWD STD. PLAN W-21.*
35. *INSTALL 6" MJxMJ 22.5° BEND WITH THRUST BLOCK PER LACWD STD. PLAN W-21.*
36. *INSTALL 6" MJxMJ 45° BEND WITH THRUST BLOCK PER LACWD STD. PLAN W-21.*
45. *INSTALL 6" MJxMJ COUPLING.*
50. *ABANDON A SEAL EXISTING WATER SYSTEM IN PLACE AND CUT, PLUG, AND CEMENT EXISTING PIPE END PER LACWD STD. PLAN W-22*

NOTE:
HORIZONTAL AND VERTICAL LOCATIONS TO BE VERIFIED IN THE FIELD AND ENGINEER NOTIFIED OF ANY DISCREPANCIES PRIOR TO CONSTRUCTION.

RKA NORTH

20' 10' 0' 20' 40'
GRAPHIC SCALE: 1"=20'

811 Know what's below. Call before you dig.

BASIS OF BEARING:
THE BEARINGS AND COORDINATES HEREON ARE BASED ON THE CALIFORNIA COORDINATE SYSTEM OF 1983 (NAD83), ZONE 5 DATUM, BASED LOCALLY ON A LINE BETWEEN NGS CONTROL POINTS EV3794 AND EV3841, BEING N84°35'29"W, 1991.35 EPOCH.

BENCHMARK:
LOS ANGELES COUNTY PUBLIC WORKS BENCH MARK NO. 1G4120.
DESCRIPTION: (SBM MON IN S. END C.B. 5FT N/O BCR @ NE COR. SAN GABRIEL BLVD & HUNTINGTON DR MKD (BM 10-5A 1966).
ELEVATION = 601.950

Δ	DATE	DESCRIPTION	APP'D	DATE

REVISIONS

CITY OF SOUTH PASADENA

APPROVED BY: _____ DATE

REGISTERED PROFESSIONAL ENGINEER — KURT R. PEDERSEN — NO. 69745 — CIVIL — STATE OF CALIFORNIA

RKA CONSULTING GROUP
398 S. LEMON CREEK DRIVE · SUITE E · WALNUT, CA · 91789
(909) 594-9702 · FAX (909) 594-2658
WWW.RKAGROUP.COM

5-13-25
KURT R. PEDERSEN RCE 69745 DATE

CITY OF SOUTH PASADENA

FY2019-20 STREET & WATER IMP.
WATER IMPROVEMENT
GLENDON WAY

STREET & WATER IMPROVEMENT PROJECT

SHEET 15 OF 33 SHEETS

DESIGNED BY:
DRAWN BY:
REVIEWED BY: KRP
JOB NO: 323007
DRAWING NAME: \ACAD\323007\DWG\LSTR14.DWG
PLAN SET: FY19-20 STREET IMPROVEMENT PROJECT
DRAWING LAST UPDATED: 2024-10-17 LATEST MYLAR REVISION DATE: X
MYLAR PLOT DATE: X

MILL ROAD

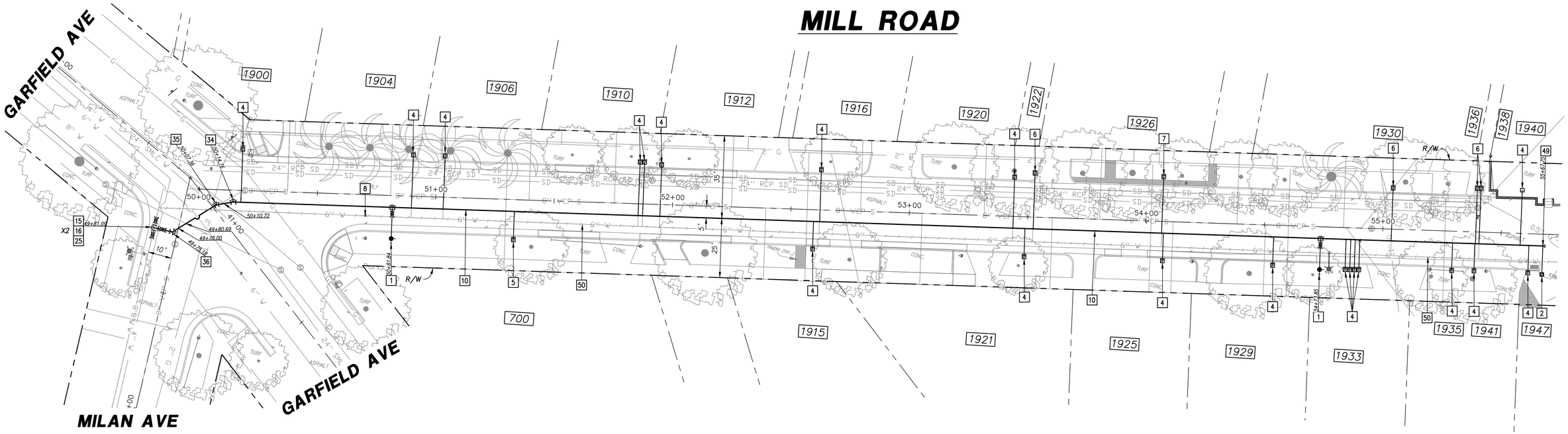

CONSTRUCTION NOTES

1. REMOVE EXISTING FIRE HYDRANT AND VALVE. ABANDON EXISTING FIRE SERVICE LATERAL. INSTALL 6" CLOW MEDALLION FIRE HYDRANT PER CITY FIRE HYDRANT ASSEMBLY DETAIL, W-8 INCLUDING TRENCHING PER LACWD STD. PLAN W-46.
2. INSTALL 2" BLOW OFF, BURIED, PER LACDPW STD. PLAN W-4.
4. CONSTRUCT NEW 1" WATER SERVICE PER LACWD STD. PLAN W-5. REPLACE METER AND METER BOX.
5. CONSTRUCT NEW 1" WATER SERVICE PER LACWD STD. PLAN W-5. REPLACE METER AND METER BOX. INSTALL 1" TO 3/4" BUSHING.
6. CONSTRUCT NEW 1.5" WATER SERVICE PER LACWD STD. PLAN W-5. REPLACE METER AND METER BOX.
7. CONSTRUCT NEW 2" WATER SERVICE PER LACWD STD. PLAN W-5. REPLACE METER AND METER BOX.
8. REMOVE EXIST. VALVE CAN AND COVER. FILL WITH C.L.S.M. UP TO A.C.. PATCH WITH HMA.
10. INSTALL 6" CL. 52, D.I.P. WATER MAIN LINE, INCLUDING TRENCHING PER LACDW STD. PLAN W-46. INCLUDES TYTON FIELD LOK 350 GASKETS WHERE LESS THAN 10' FROM SEWER MAIN.
15. INSTALL 6" MUELLER RESILIENT WEDGE GATE VALVE WITH VALVE BOX AND COVER PER LACWD STD. PLAN W-15.
16. INSTALL 8" MUELLER RESILIENT WEDGE GATE VALVE WITH VALVE BOX AND COVER PER LACWD STD. PLAN W-15.
25. INSTALL 8"x8"x6" TEE WITH THRUST BLOCK PER LACWD STD. PLAN W-21.
34. INSTALL 6" MJxMJ 11.25° BEND WITH THRUST BLOCK PER LACWD STD. PLAN W-21.
35. INSTALL 6" MJxMJ 22.5° BEND WITH THRUST BLOCK PER LACWD STD. PLAN W-21.
36. INSTALL 6" MJxMJ 45° BEND WITH THRUST BLOCK PER LACWD STD. PLAN W-21.
49. INSTALL 8" BLIND FLANGE WITH THRUST BLOCK PER LACWD STD. PLAN W-21.
50. ABANDON A SEAL EXISTING WATER SYSTEM IN PLACE AND CUT, PLUG, AND CEMENT EXISTING PIPE END PER LACWD STD. PLAN W-22

NOTE:
HORIZONTAL AND VERTICAL LOCATIONS TO BE VERIFIED IN THE FIELD AND ENGINEER NOTIFIED OF ANY DISCREPANCIES PRIOR TO CONSTRUCTION.

NORTH

20' 10' 0' 20' 40'
GRAPHIC SCALE: 1"=20'

811 Know what's Call before you dig.

BASIS OF BEARING:
THE BEARINGS AND COORDINATES HEREON ARE BASED ON THE CALIFORNIA COORDINATE SYSTEM OF 1983 (NAD83), ZONE 5 DATUM, BASED LOCALLY ON A LINE BETWEEN NGS CONTROL POINTS EV3794 AND EV3841, BEING N84°35'29"W, 1991.35 EPOCH.

BENCHMARK:
LOS ANGELES COUNTY PUBLIC WORKS BENCH MARK NO. 1G4120.
DESCRIPTION: (SBM MON IN S. END C.B. 5FT N/O BCR @ NE COR. SAN GABRIEL BLVD & HUNTINGTON DR MKD (BM 10-5A 1966).
ELEVATION = 601.950

Δ	DATE	DESCRIPTION	APP'D	DATE

REVISIONS

CITY OF SOUTH PASADENA

APPROVED BY: _____ DATE

REGISTERED PROFESSIONAL ENGINEER — KURT R. PEDERSEN — NO. 69745 — CIVIL — STATE OF CALIFORNIA

RKA CONSULTING GROUP
398 S. LEMON CREEK DRIVE · SUITE E · WALNUT · CA · 91789
(909) 594-9702 · FAX (909) 594-2659
WWW.RKAGROUP.COM

5-13-25
KURT R. PEDERSEN RCE 69745 DATE

CITY OF SOUTH PASADENA

FY2019-20 STREET & WATER IMP.
WATER IMPROVEMENT
MILL ROAD

STREET & WATER IMPROVEMENT PROJECT

SHEET 16 OF 33 SHEETS

DRAWING LAST UPDATED: 2024-10-17 PLAN SET: FY19-20 STREET IMPROVEMENT PROJECT
MJKAR PLOT DATE: X LATEST MJKAR REVISION DATE: X

DESIGNED BY:
DRAWN BY:
REVIEWED BY: KRP

JOB NO.: 323007

DRAWING NAME: \ACAD\323007\DWG\LSTR15.DWG

MILAN AVENUE

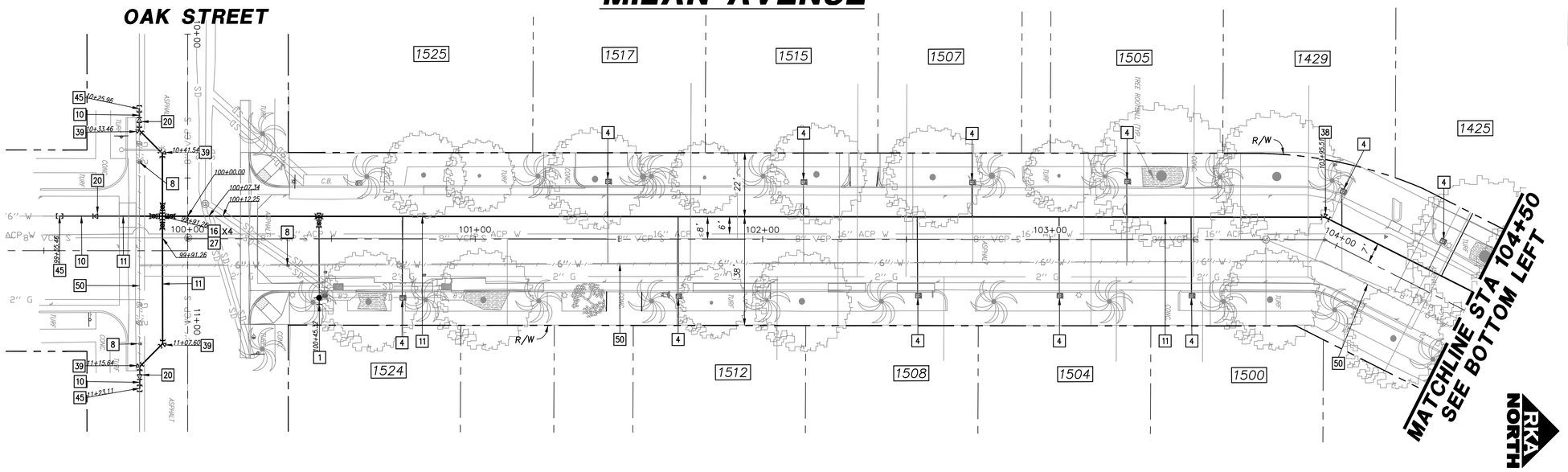

MILAN AVENUE

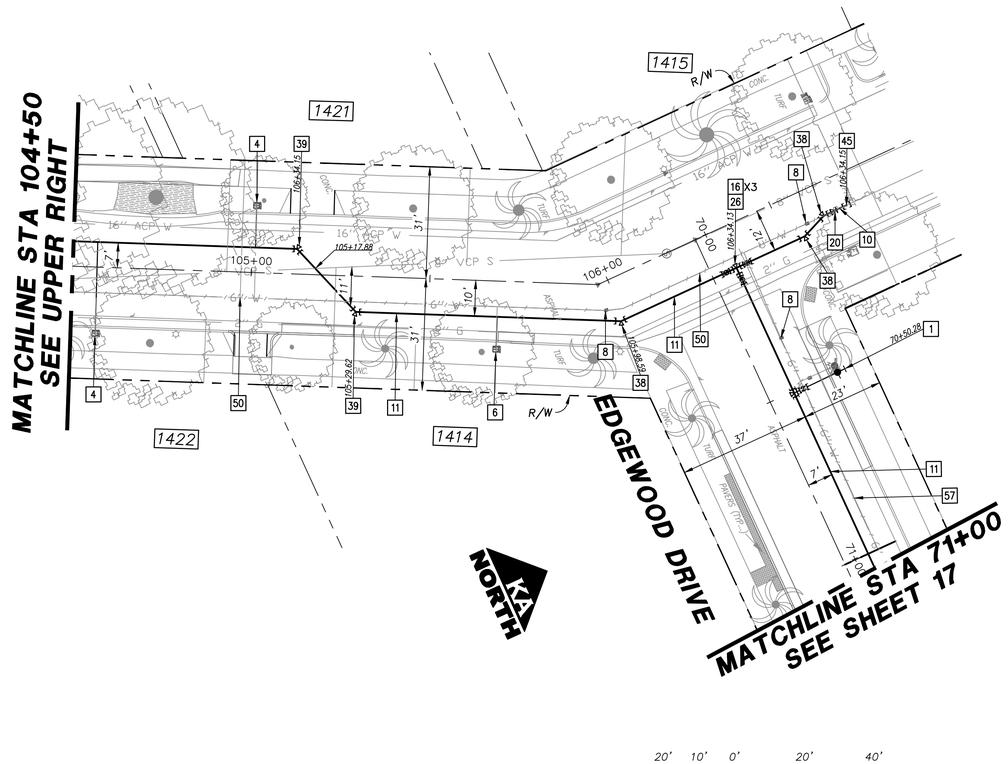

CONSTRUCTION NOTES

1. REMOVE EXISTING FIRE HYDRANT AND VALVE. ABANDON EXISTING FIRE SERVICE LATERAL. INSTALL 6" CLOW MEDALLION FIRE HYDRANT PER CITY FIRE HYDRANT ASSEMBLY DETAIL, W-8 INCLUDING TRENCHING PER LACWD STD. PLAN W-46.
4. CONSTRUCT NEW 1" WATER SERVICE PER LACWD STD. PLAN W-5. REPLACE METER AND METER BOX.
6. CONSTRUCT NEW 1.5" WATER SERVICE PER LACWD STD. PLAN W-5. REPLACE METER AND METER BOX.
8. REMOVE EXIST. VALVE CAN AND COVER. FILL WITH C.L.S.M. UP TO A.C.. PATCH WITH HMA.
10. INSTALL 6" CL. 52, D.I.P. WATER MAIN LINE, INCLUDING TRENCHING PER LACDW STD. PLAN W-46. INCLUDES TYTON FIELD LOK 350 GASKETS WHERE LESS THAN 10' FROM SEWER MAIN.
11. INSTALL 8" CL. 52, D.I.P. WATER MAIN LINE, INCLUDING TRENCHING PER LACDW STD. PLAN W-46. INCLUDES TYTON FIELD LOK 350 GASKETS WHERE LESS THAN 10' FROM SEWER MAIN.
16. INSTALL 8" MUELLER RESILIENT WEDGE GATE VALVE WITH VALVE BOX AND COVER PER LACWD STD. PLAN W-15.
20. INSTALL 8"x6" REDUCER.
26. INSTALL 8"x8"x8" TEE WITH THRUST BLOCK PER LACWD STD. PLAN W-21.
27. INSTALL 8"x8"x8"x8 CROSS WITH THRUST BLOCK PER LACWD STD. PLAN W-21.
38. INSTALL 8" MJxMJ 22.5° BEND WITH THRUST BLOCK PER LACWD STD. PLAN W-21.
39. INSTALL 8" MJxMJ 45° BEND WITH THRUST BLOCK PER LACWD STD. PLAN W-21.
45. INSTALL 6" MJxMJ COUPLING.
50. ABANDON A SEAL EXISTING WATER SYSTEM IN PLACE AND CUT, PLUG, AND CEMENT EXISTING PIPE END PER LACWD STD. PLAN W-22

NOTE:
HORIZONTAL AND VERTICAL LOCATIONS TO BE VERIFIED IN THE FIELD AND ENGINEER NOTIFIED OF ANY DISCREPANCIES PRIOR TO CONSTRUCTION.

20' 10' 0' 20' 40'
GRAPHIC SCALE: 1"=20'

811 Know what's below. Call before you dig.

BASIS OF BEARING:
THE BEARINGS AND COORDINATES HEREON ARE BASED ON THE CALIFORNIA COORDINATE SYSTEM OF 1983 (NAD83), ZONE 5 DATUM, BASED LOCALLY ON A LINE BETWEEN NGS CONTROL POINTS EV3794 AND EV3841, BEING N84°35'29"W, 1991.35 EPOCH.

BENCHMARK:
LOS ANGELES COUNTY PUBLIC WORKS BENCH MARK NO. 1G4120.
DESCRIPTION: (SBM MON IN S. END C.B. 5FT N/O BCR @ NE COR. SAN GABRIEL BLVD & HUNTINGTON DR MKD (BM 10-5A 1966).
ELEVATION = 601.950

Δ	DATE	DESCRIPTION	APP'D	DATE

REVISIONS

CITY OF SOUTH PASADENA

APPROVED BY: _____ DATE

REGISTERED PROFESSIONAL ENGINEER — KURT R. PEDERSEN — NO. 69745 — CIVIL — STATE OF CALIFORNIA

RKA CONSULTING GROUP
398 S. LEMON CREEK DRIVE - SUITE E-WALNUT-CA-91789
(909) 594-9702 - FAX (909) 594-2658
WWW.RKAGROUP.COM

5-13-25
KURT R. PEDERSEN RCE 69745 DATE

CITY OF SOUTH PASADENA

FY2019-20 STREET & WATER IMP.
WATER IMPROVEMENT
MILAN AVENUE

STREET & WATER IMPROVEMENT PROJECT

SHEET 17 OF 33 SHEETS

DESIGNED BY:
DRAWN BY:
REVIEWED BY: KRP
JOB NO.: 323007
DRAWING NAME: \ACAD\323007\DWG\LSTR16.DWG
PLAN SET: FY19-20 STREET IMPROVEMENT PROJECT
LATEST MAJOR REVISION DATE: X
DRAWING LAST UPDATED: 2024-10-17
MAJOR PLOT DATE: X

EDGEWOOD DRIVE

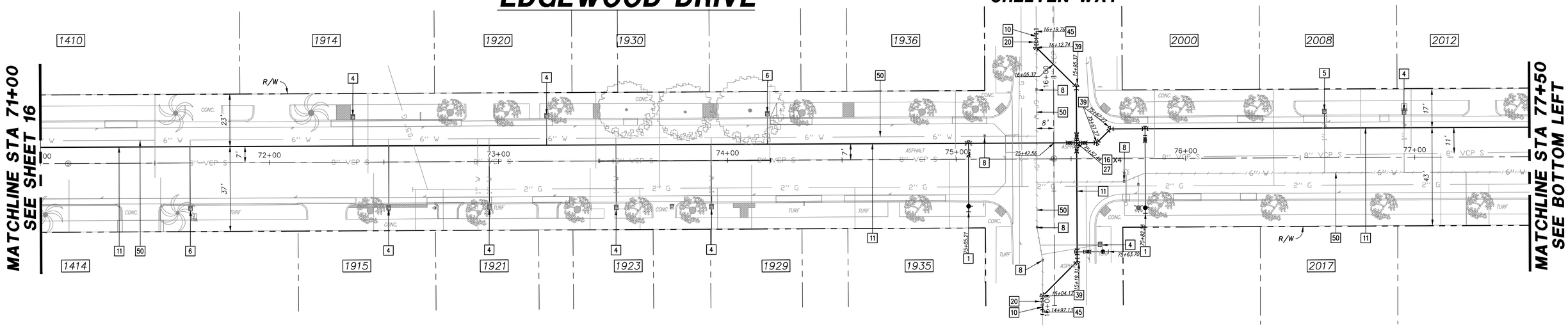

EDGEWOOD DRIVE

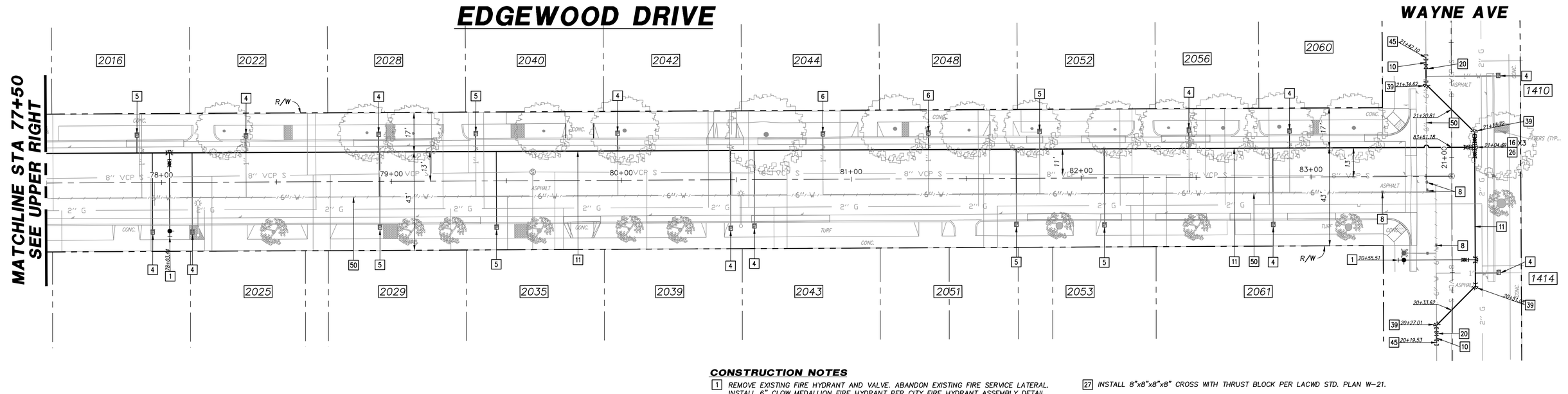

CONSTRUCTION NOTES

1. REMOVE EXISTING FIRE HYDRANT AND VALVE. ABANDON EXISTING FIRE SERVICE LATERAL. INSTALL 6" CLOW MEDALLION FIRE HYDRANT PER CITY FIRE HYDRANT ASSEMBLY DETAIL, W-8 INCLUDING TRENCHING PER LACWD STD. PLAN W-46.
4. CONSTRUCT NEW 1" WATER SERVICE PER LACWD STD. PLAN W-5. REPLACE METER AND METER BOX.
5. CONSTRUCT NEW 1" WATER SERVICE PER LACWD STD. PLAN W-5. REPLACE METER AND METER BOX. INSTALL 1" TO 3/4" BUSHING.
6. CONSTRUCT NEW 1.5" WATER SERVICE PER LACWD STD. PLAN W-5. REPLACE METER AND METER BOX.
8. REMOVE EXIST. VALVE CAN AND COVER. FILL WITH C.L.S.M. UP TO A.C.. PATCH WITH HMA.
10. INSTALL 6" CL. 52, D.I.P. WATER MAIN LINE, INCLUDING TRENCHING PER LACDW STD. PLAN W-46. INCLUDES TYTON FIELD LOK 350 GASKETS WHERE LESS THAN 10' FROM SEWER MAIN.
11. INSTALL 8" CL. 52, D.I.P. WATER MAIN LINE, INCLUDING TRENCHING PER LACDW STD. PLAN W-46. INCLUDES TYTON FIELD LOK 350 GASKETS WHERE LESS THAN 10' FROM SEWER MAIN.
16. INSTALL 8" MUELLER RESILIENT WEDGE GATE VALVE WITH VALVE BOX AND COVER PER LACWD STD. PLAN W-15.
20. INSTALL 8"x6" REDUCER.
26. INSTALL 8"x8"x8" TEE WITH THRUST BLOCK PER LACWD STD. PLAN W-21.
27. INSTALL 8"x8"x8"x8" CROSS WITH THRUST BLOCK PER LACWD STD. PLAN W-21.
39. INSTALL 8" MJxMJ 45° BEND WITH THRUST BLOCK PER LACWD STD. PLAN W-21.
45. INSTALL 6" MJxMJ COUPLING.
50. ABANDON A SEAL EXISTING WATER SYSTEM IN PLACE AND CUT, PLUG, AND CEMENT EXISTING PIPE END PER LACWD STD. PLAN W-22

NOTE:
HORIZONTAL AND VERTICAL LOCATIONS TO BE VERIFIED IN THE FIELD AND ENGINEER NOTIFIED OF ANY DISCREPANCIES PRIOR TO CONSTRUCTION.

RKA NORTH

20' 10' 0' 20' 40'
GRAPHIC SCALE: 1"=20'

811 Know what's Call before you dig.

BASIS OF BEARING:
THE BEARINGS AND COORDINATES HEREON ARE BASED ON THE CALIFORNIA COORDINATE SYSTEM OF 1983 (NAD83), ZONE 5 DATUM, BASED LOCALLY ON A LINE BETWEEN NGS CONTROL POINTS EV3794 AND EV3841, BEING N84°35'29"W, 1991.35 EPOCH.

BENCHMARK:
LOS ANGELES COUNTY PUBLIC WORKS BENCH MARK NO. 1G4120.
DESCRIPTION: (SBM MON IN S. END C.B. 5FT N/O BCR @ NE COR. SAN GABRIEL BLVD & HUNTINGTON DR MKD (BM 10-5A 1966).
ELEVATION = 601.950

Δ	DATE	DESCRIPTION	APP'D	DATE

REVISIONS

CITY OF SOUTH PASADENA

APPROVED BY: _____ DATE

REGISTERED PROFESSIONAL ENGINEER · KURT R. PEDERSEN · NO. 69745 · CIVIL · STATE OF CALIFORNIA

RKA CONSULTING GROUP
398 S. LEMON CREEK DRIVE · SUITE E-WALNUT · CA · 91789
(909) 594-9702 · FAX (909) 594-2658
WWW.RKAGROUP.COM
KURT R. PEDERSEN RCE 69745 5-13-25 DATE

CITY OF SOUTH PASADENA

FY2019-20 STREET & WATER IMP.

WATER IMPROVEMENT
EDGEWOOD DRIVE

STREET & WATER IMPROVEMENT PROJECT

SHEET 18 OF 33 SHEETS

DESIGNED BY:
DRAWN BY:
REVIEWED BY: KRP
JOB NO.: 323007
DRAWING NAME: \ACAD\323007\DWG\LSTR17.DWG
PLAN SET: FY19-20 STREET IMPROVEMENT PROJECT
DRAWING LAST UPDATED: 2024-10-17 LATEST MYLAR REVISION DATE: X
MYLAR PLOT DATE: X

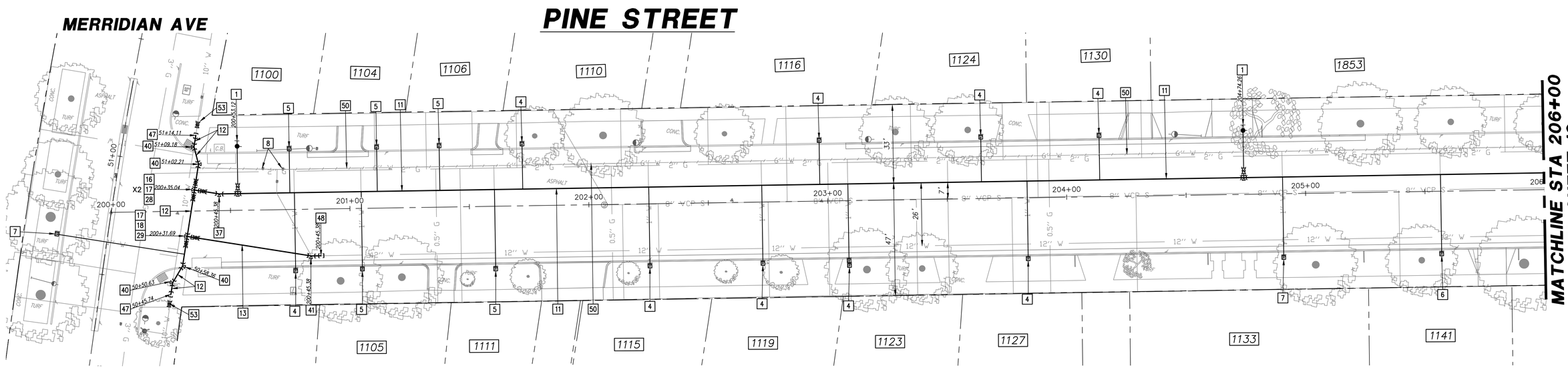

CONSTRUCTION NOTES

1. REMOVE EXISTING FIRE HYDRANT AND VALVE. ABANDON EXISTING FIRE SERVICE LATERAL. INSTALL 6" CLOW MEDALLION FIRE HYDRANT PER CITY FIRE HYDRANT ASSEMBLY DETAIL, W-8 INCLUDING TRENCHING PER LACWD STD. PLAN W-46.
4. CONSTRUCT NEW 1" WATER SERVICE PER LACWD STD. PLAN W-5. REPLACE METER AND METER BOX.
5. CONSTRUCT NEW 1" WATER SERVICE PER LACWD STD. PLAN W-5. REPLACE METER AND METER BOX. INSTALL 1" TO 3/4" BUSHING.
6. CONSTRUCT NEW 1.5" WATER SERVICE PER LACWD STD. PLAN W-5. REPLACE METER AND METER BOX.
7. CONSTRUCT NEW 2" WATER SERVICE PER LACWD STD. PLAN W-5. REPLACE METER AND METER BOX.
8. REMOVE EXIST. VALVE CAN AND COVER. FILL WITH C.L.S.M. UP TO A.C.. PATCH WITH HMA.
11. INSTALL 8" CL. 52, D.I.P. WATER MAIN LINE, INCLUDING TRENCHING PER LACDW STD. PLAN W-46. INCLUDES TYTON FIELD LOK 350 GASKETS WHERE LESS THAN 10' FROM SEWER MAIN.
12. INSTALL 10" CL. 52, D.I.P. WATER MAIN LINE, INCLUDING TRENCHING PER LACDW STD. PLAN W-46. INCLUDES TYTON FIELD LOK 350 GASKETS WHERE LESS THAN 10' FROM SEWER MAIN.
13. INSTALL 12" CL. 52, D.I.P. WATER MAIN LINE, INCLUDING TRENCHING PER LACDW STD. PLAN W-46. INCLUDES TYTON FIELD LOK 350 GASKETS WHERE LESS THAN 10' FROM SEWER MAIN.
16. INSTALL 8" MUELLER RESILIENT WEDGE GATE VALVE WITH VALVE BOX AND COVER PER LACWD STD. PLAN W-15.
17. INSTALL 10" MUELLER RESILIENT WEDGE GATE VALVE WITH VALVE BOX AND COVER PER LACWD STD. PLAN W-15.
18. INSTALL 12" MUELLER RESILIENT WEDGE GATE VALVE WITH VALVE BOX AND COVER PER LACWD STD. PLAN W-15.
28. INSTALL 10"x10"x8" TEE WITH THRUST BLOCK PER LACWD STD. PLAN W-21.
29. INSTALL 12"x10"x10" TEE WITH THRUST BLOCK PER LACWD STD. PLAN W-21.
37. INSTALL 8" MJxMJ 11.25° BEND WITH THRUST BLOCK PER LACWD STD. PLAN W-21.
40. INSTALL 10" MJxMJ 22.5° BEND WITH THRUST BLOCK PER LACWD STD. PLAN W-21.
41. INSTALL 12" MJxMJ 11.25° BEND WITH THRUST BLOCK PER LACWD STD. PLAN W-21.
47. INSTALL 10" MJxMJ COUPLING.
48. INSTALL 12" MJxMJ COUPLING.
50. ABANDON A SEAL EXISTING WATER SYSTEM IN PLACE AND CUT, PLUG, AND CEMENT EXISTING PIPE END PER LACWD STD. PLAN W-22
53. INSTALL 10" LINE STOP.

NOTE:
HORIZONTAL AND VERTICAL LOCATIONS TO BE VERIFIED IN THE FIELD AND ENGINEER NOTIFIED OF ANY DISCREPANCIES PRIOR TO CONSTRUCTION.

RKA NORTH

20' 10' 0' 20' 40'

GRAPHIC SCALE: 1"=20'

811 Know what's below. Call before you dig.

BASIS OF BEARING.
THE BEARINGS AND COORDINATES HEREON ARE BASED ON THE CALIFORNIA COORDINATE SYSTEM OF 1983 (NAD83), ZONE 5 DATUM, BASED LOCALLY ON A LINE BETWEEN NGS CONTROL POINTS EV3794 AND EV3841, BEING N84°35'29"W, 1991.35 EPOCH.

BENCHMARK.
LOS ANGELES COUNTY PUBLIC WORKS BENCH MARK NO. 1G4120.
DESCRIPTION: (SBM MON IN S. END C.B. 5FT N/O BCR @ NE COR. SAN GABRIEL BLVD & HUNTINGTON DR MKD (BM 10-5A 1966).
ELEVATION = 601.950

Δ	DATE	DESCRIPTION	APP'D	DATE

REVISIONS

CITY OF SOUTH PASADENA

APPROVED BY: _____ DATE

REGISTERED PROFESSIONAL ENGINEER — KURT R. PEDERSEN — NO. 69745 — CIVIL — STATE OF CALIFORNIA

RKA CONSULTING GROUP
398 S. LEMON CREEK DRIVE - SUITE E-WALNUT, CA 91789
(909) 594-9702 - FAX (909) 594-2658
WWW.RKAGROUP.COM

KURT R. PEDERSEN RCE 69745 5-13-25 DATE

CITY OF SOUTH PASADENA

FY2019-20 STREET & WATER IMP.

WATER IMPROVEMENT
PINE STREET

STREET & WATER IMPROVEMENT PROJECT

SHEET 19 OF 33 SHEETS

DESIGNED BY:
DRAWN BY:
REVIEWED BY: KRP
JOB NO.: 323007
DRAWING NAME: V:\CAD\323007\DWG\LSTR1B.DWG
PLAN SET: FY19-20 STREET IMPROVEMENT PROJECT
LATEST MYLAR REVISION DATE: X
DRAWING LAST UPDATED: 2024-10-17
MYLAR PLOT DATE: X

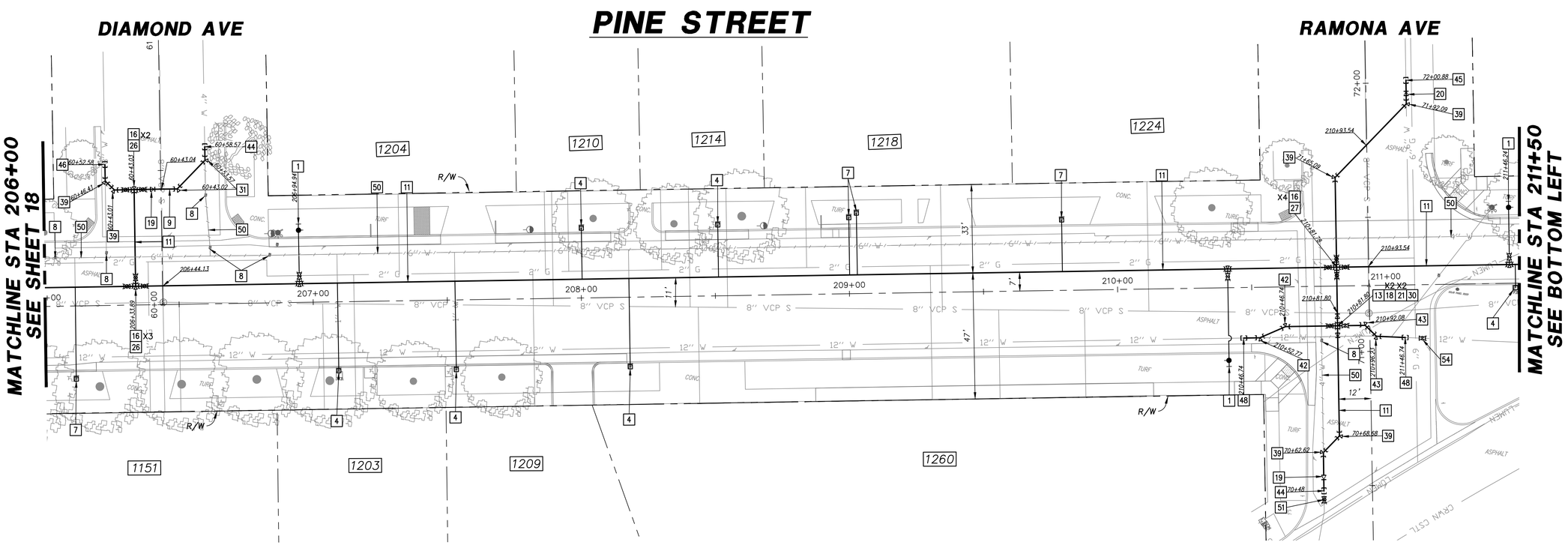

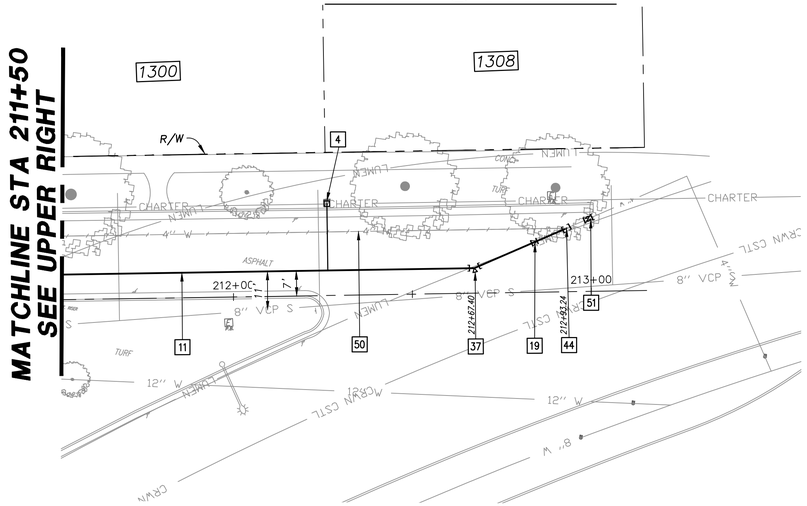

NOTE:
HORIZONTAL AND VERTICAL LOCATIONS TO BE VERIFIED IN THE FIELD AND ENGINEER NOTIFIED OF ANY DISCREPANCIES PRIOR TO CONSTRUCTION.

RKA NORTH

20' 10' 0' 20' 40'

GRAPHIC SCALE: 1"=20'

CONSTRUCTION NOTES

1. REMOVE EXISTING FIRE HYDRANT AND VALVE. ABANDON EXISTING FIRE SERVICE LATERAL. INSTALL 6" CLOW MEDALLION FIRE HYDRANT PER CITY FIRE HYDRANT ASSEMBLY DETAIL, W-8 INCLUDING TRENCHING PER LACWD STD. PLAN W-46.
4. CONSTRUCT NEW 1" WATER SERVICE PER LACWD STD. PLAN W-5. REPLACE METER AND METER BOX.
7. CONSTRUCT NEW 2" WATER SERVICE PER LACWD STD. PLAN W-5. REPLACE METER AND METER BOX.
8. REMOVE EXIST. VALVE CAN AND COVER. FILL WITH C.L.S.M. UP TO A.C.. PATCH WITH HMA.
9. INSTALL 4" CL. 52, D.I.P. WATER MAIN LINE, INCLUDING TRENCHING PER LACDW STD. PLAN W-46.
11. INSTALL 8" CL. 52, D.I.P. WATER MAIN LINE, INCLUDING TRENCHING PER LACDW STD. PLAN W-46. INCLUDES TYTON FIELD LOK 350 GASKETS WHERE LESS THAN 10' FROM SEWER MAIN.
13. INSTALL 12" CL. 52, D.I.P. WATER MAIN LINE, INCLUDING TRENCHING PER LACDW STD. PLAN W-46. INCLUDES TYTON FIELD LOK 350 GASKETS WHERE LESS THAN 10' FROM SEWER MAIN.
16. INSTALL 8" MUELLER RESILIENT WEDGE GATE VALVE WITH VALVE BOX AND COVER PER LACWD STD. PLAN W-15.
18. INSTALL 12" MUELLER RESILIENT WEDGE GATE VALVE WITH VALVE BOX AND COVER PER LACWD STD. PLAN W-15.
19. INSTALL 8"x4" REDUCER
20. INSTALL 8"x6" REDUCER
21. INSTALL 12"x8" REDUCER.
26. INSTALL 8"x8"x8" TEE WITH THRUST BLOCK PER LACWD STD. PLAN W-21.
27. INSTALL 8"x8"x8"x8" CROSS WITH THRUST BLOCK PER LACWD STD. PLAN W-21.
30. INSTALL 12"x12"x12"x12" CROSS WITH THRUST BLOCK PER LACWD STD. PLAN W-21.
31. INSTALL 4" MJxMJ 45° BEND WITH THRUST BLOCK PER LACWD STD. PLAN W-21.
37. INSTALL 8" MJxMJ 11.25° BEND WITH THRUST BLOCK PER LACWD STD. PLAN W-21.
39. INSTALL 8" MJxMJ 45° BEND WITH THRUST BLOCK PER LACWD STD. PLAN W-21.
42. INSTALL 12" MJxMJ 22.5° BEND WITH THRUST BLOCK PER LACWD STD. PLAN W-21.
43. INSTALL 12" MJxMJ 45° BEND WITH THRUST BLOCK PER LACWD STD. PLAN W-21.
44. INSTALL 4" MJxMJ COUPLING.
45. INSTALL 6" MJxMJ COUPLING.
46. INSTALL 8" MJxMJ COUPLING.
48. INSTALL 12" MJxMJ COUPLING.
50. ABANDON A SEAL EXISTING WATER SYSTEM IN PLACE AND CUT, PLUG, AND CEMENT EXISTING PIPE END PER LACWD STD. PLAN W-22
51. INSTALL 4" LINE STOP.
54. INSTALL 12" LINE STOP.

811 Know what's below. Call before you dig.

BASIS OF BEARING:
THE BEARINGS AND COORDINATES HEREON ARE BASED ON THE CALIFORNIA COORDINATE SYSTEM OF 1983 (NAD83), ZONE 5 DATUM, BASED LOCALLY ON A LINE BETWEEN NGS CONTROL POINTS EV3794 AND EV3841, BEING N84°35'29"W, 1991.35 EPOCH.

BENCHMARK:
LOS ANGELES COUNTY PUBLIC WORKS BENCH MARK NO. 1G4120.
DESCRIPTION: (SBM MON IN S. END C.B. 5FT N/O BCR @ NE COR. SAN GABRIEL BLVD & HUNTINGTON DR MKD (BM 10-5A 1966).
ELEVATION = 601.950

Δ	DATE	DESCRIPTION	APP'D	DATE

REVISIONS

CITY OF SOUTH PASADENA

APPROVED BY: _____ DATE

REGISTERED PROFESSIONAL ENGINEER — KURT R. PEDERSEN — NO. 69745 — CIVIL — STATE OF CALIFORNIA

RKA CONSULTING GROUP
398 S. LEMON CREEK DRIVE · SUITE E · WALNUT, CA · 91789
(909) 594-9702 · FAX (909) 594-2658
WWW.RKAGROUP.COM

KURT R. PEDERSEN RCE 69745 5-13-25 DATE

CITY OF SOUTH PASADENA

FY2019-20 STREET & WATER IMP.

WATER IMPROVEMENT
PINE STREET

STREET & WATER IMPROVEMENT PROJECT

SHEET 20 OF 33 SHEETS

DESIGNED BY:
DRAWN BY:
REVIEWED BY: KRP
PLAN SET: FY19-20 STREET IMPROVEMENT PROJECT
DRAWING LAST UPDATED: 2024-10-17
LATEST MYLAR REVISION DATE: X
MYLAR PLOT DATE: X
DRAWING NAME: \ACAD\32307\DWG\LST1919.DWG
JOB NO.: 32307

ONEONTA KNOLL STREET

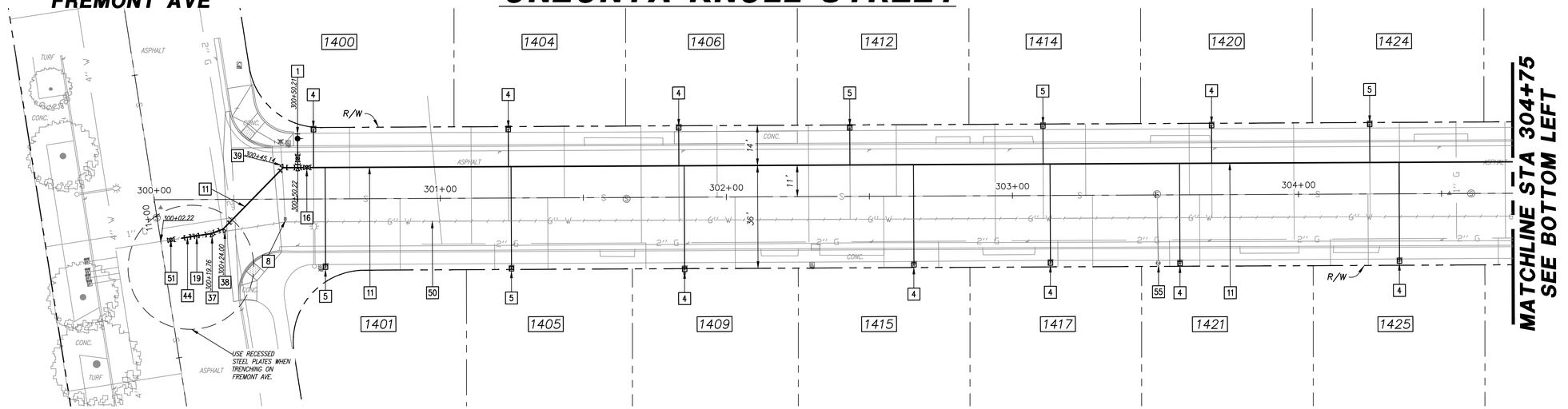

ONEONTA KNOLL STREET

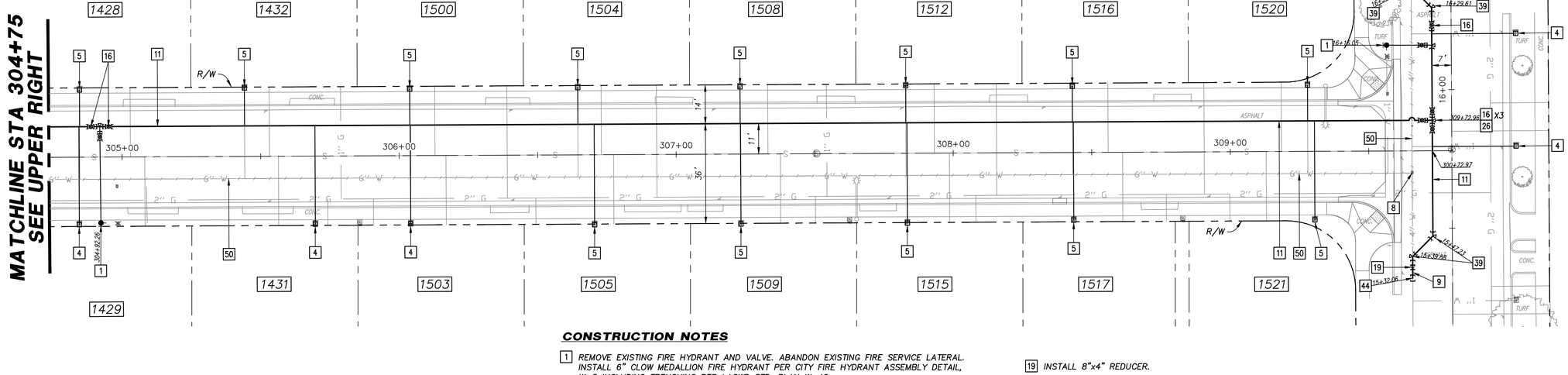

CONSTRUCTION NOTES

1. REMOVE EXISTING FIRE HYDRANT AND VALVE. ABANDON EXISTING FIRE SERVICE LATERAL. INSTALL 6" CLOW MEDALLION FIRE HYDRANT PER CITY FIRE HYDRANT ASSEMBLY DETAIL, W-8 INCLUDING TRENCHING PER LACWD STD. PLAN W-46.
4. CONSTRUCT NEW 1" WATER SERVICE PER LACWD STD. PLAN W-5. REPLACE METER AND METER BOX.
5. CONSTRUCT NEW 1" WATER SERVICE PER LACWD STD. PLAN W-5. REPLACE METER AND METER BOX. INSTALL 1" TO 3/4" BUSHING.
8. REMOVE EXIST. VALVE CAN AND COVER. FILL WITH C.L.S.M. UP TO A.C.. PATCH WITH HMA.
9. INSTALL 4" CL. 52, D.I.P. WATER MAIN LINE, INCLUDING TRENCHING PER LACDW STD. PLAN W-46. INCLUDES TYTON FIELD LOK 350 GASKETS WHERE LESS THAN 10' FROM SEWER MAIN.
11. INSTALL 8" CL. 52, D.I.P. WATER MAIN LINE, INCLUDING TRENCHING PER LACDW STD. PLAN W-46. INCLUDES TYTON FIELD LOK 350 GASKETS WHERE LESS THAN 10' FROM SEWER MAIN.
16. INSTALL 8" MUELLER RESILIENT WEDGE GATE VALVE WITH VALVE BOX AND COVER PER LACWD STD. PLAN W-15.
19. INSTALL 8"x4" REDUCER.
26. INSTALL 8"x8"x8" TEE WITH THRUST BLOCK PER LACWD STD. PLAN W-21.
37. INSTALL 8" MJxMJ 11.25° BEND WITH THRUST BLOCK PER LACWD STD. PLAN W-21.
38. INSTALL 8" MJxMJ 22.5° BEND WITH THRUST BLOCK PER LACWD STD. PLAN W-21.
39. INSTALL 8" MJxMJ 45° BEND WITH THRUST BLOCK PER LACWD STD. PLAN W-21.
44. INSTALL 4" MJxMJ COUPLING.
50. ABANDON A SEAL EXISTING WATER SYSTEM IN PLACE AND CUT, PLUG, AND CEMENT EXISTING PIPE END PER LACWD STD. PLAN W-22.
51. INSTALL 4" LINE STOP.
55. REMOVE EXISTING FLUSH TANK AND COVER. REPLACE ENTIRE SIDEWALK PANEL IF DAMAGED.

NOTE:
HORIZONTAL AND VERTICAL LOCATIONS TO BE VERIFIED IN THE FIELD AND ENGINEER NOTIFIED OF ANY DISCREPANCIES PRIOR TO CONSTRUCTION.

RKA NORTH

20' 10' 0' 20' 40'

GRAPHIC SCALE: 1"=20'

811 Know what's Call before you dig.

BASIS OF BEARING:
THE BEARINGS AND COORDINATES HEREON ARE BASED ON THE CALIFORNIA COORDINATE SYSTEM OF 1983 (NAD83), ZONE 5 DATUM, BASED LOCALLY ON A LINE BETWEEN NGS CONTROL POINTS EV3794 AND EV3841, BEING N84°35'29"W, 1991.35 EPOCH.

BENCHMARK:
LOS ANGELES COUNTY PUBLIC WORKS BENCH MARK NO. 1G4120.
DESCRIPTION: (SBM MON IN S. END C.B. 5FT N/O BCR @ NE COR. SAN GABRIEL BLVD & HUNTINGTON DR MKD (BM 10-5A 1966).
ELEVATION = 601.950

Δ	DATE	DESCRIPTION	APP'D	DATE

REVISIONS

CITY OF SOUTH PASADENA

APPROVED BY: _____ DATE

REGISTERED PROFESSIONAL ENGINEER · KURT R. PEDERSEN · NO. 69745 · CIVIL · STATE OF CALIFORNIA

RKA CONSULTING GROUP
398 S. LEMON CREEK DRIVE · SUITE E · WALNUT · CA · 91789
(909) 594-9702 · FAX (909) 594-2658
WWW.RKAGROUP.COM

5-13-25
KURT R. PEDERSEN RCE 69745 DATE

CITY OF SOUTH PASADENA

FY2019-20 STREET & WATER IMP.

WATER IMPROVEMENT
ONEONTA KNOLL STREET

STREET & WATER IMPROVEMENT PROJECT

SHEET 21 OF 33 SHEETS

DESIGNED BY:
DRAWN BY:
REVIEWED BY: KRP
JOB NO: 323007
DRAWING NAME: \ACAD\323007\DWG\LSTR20.DWG
PLAN SET: FY19-20 STREET IMPROVEMENT PROJECT
LATEST MYLAR REVISION DATE: X
DRAWING LAST UPDATED: 2024-10-17
MYLAR PLOT DATE: X

MAPLE STREET

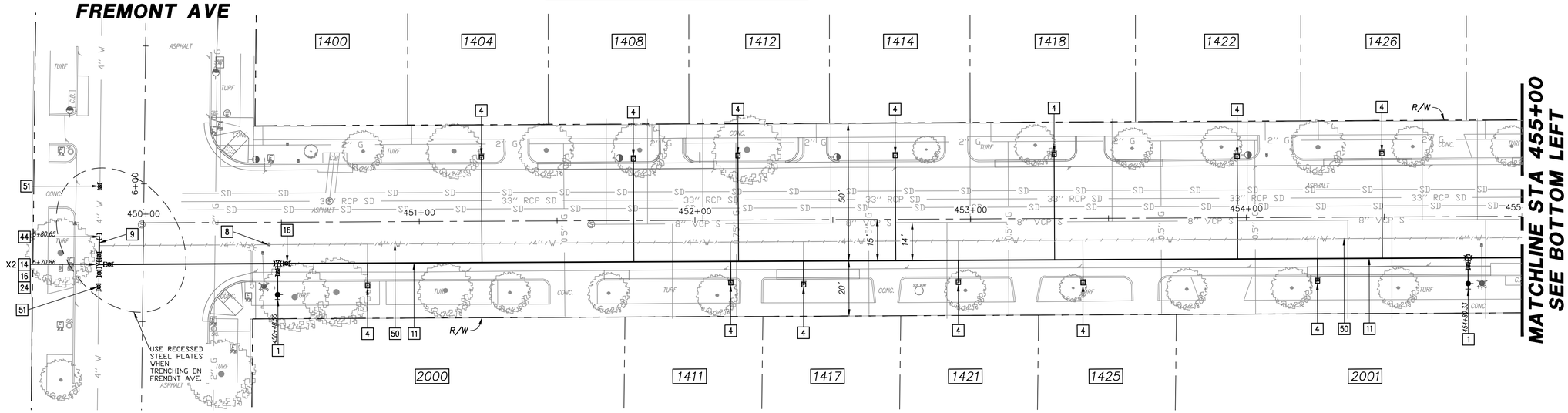

MAPLE STREET

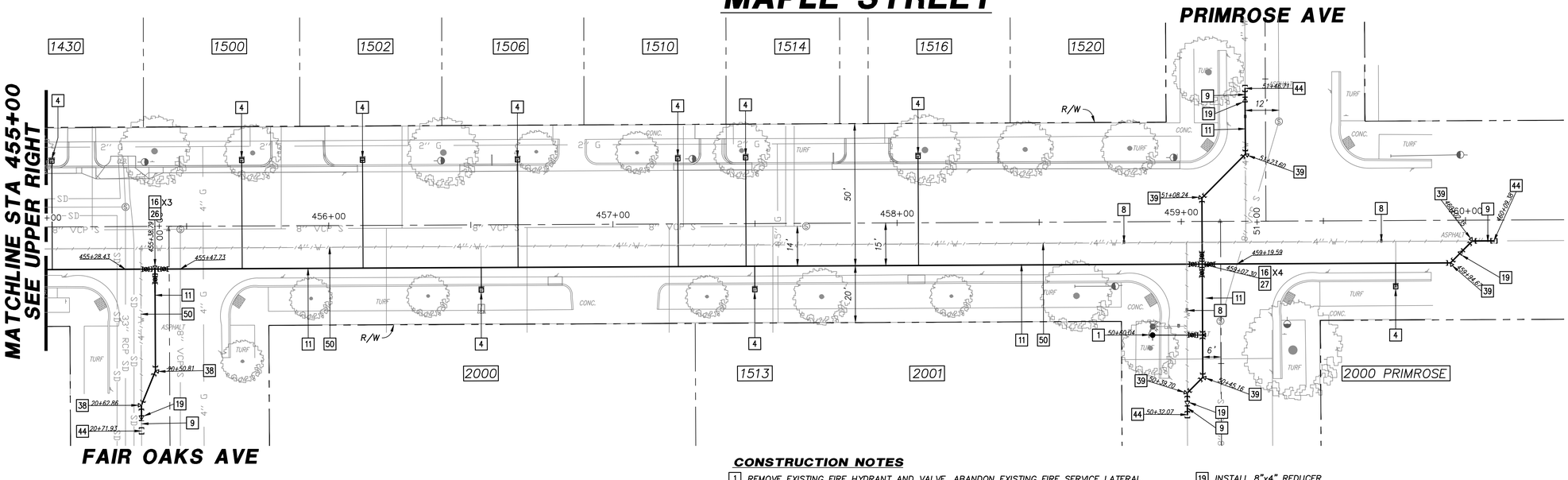

CONSTRUCTION NOTES

1. REMOVE EXISTING FIRE HYDRANT AND VALVE. ABANDON EXISTING FIRE SERVICE LATERAL. INSTALL 6" CLOW MEDALLION FIRE HYDRANT PER CITY FIRE HYDRANT ASSEMBLY DETAIL, W-8 INCLUDING TRENCHING PER LACWD STD. PLAN W-46.
4. CONSTRUCT NEW 1" WATER SERVICE PER LACWD STD. PLAN W-5. REPLACE METER AND METER BOX.
8. REMOVE EXIST. VALVE CAN AND COVER. FILL WITH C.L.S.M. UP TO A.C.. PATCH WITH HMA.
9. INSTALL 4" CL. 52, D.I.P. WATER MAIN LINE, INCLUDING TRENCHING PER LACDW STD. PLAN W-46. INCLUDES TYTON FIELD LOK 350 GASKETS WHERE LESS THAN 10' FROM SEWER MAIN.
11. INSTALL 8" CL. 52, D.I.P. WATER MAIN LINE, INCLUDING TRENCHING PER LACDW STD. PLAN W-46. INCLUDES TYTON FIELD LOK 350 GASKETS WHERE LESS THAN 10' FROM SEWER MAIN.
14. INSTALL 4" MUELLER RESILIENT WEDGE GATE VALVE WITH VALVE BOX AND COVER PER LACWD STD. PLAN W-15.
16. INSTALL 8" MUELLER RESILIENT WEDGE GATE VALVE WITH VALVE BOX AND COVER PER LACWD STD. PLAN W-15.
19. INSTALL 8"x4" REDUCER
24. INSTALL 8"x4"x4" TEE WITH THRUST BLOCK PER LACWD STD. PLAN W-21.
26. INSTALL 8"x8"x8" TEE WITH THRUST BLOCK PER LACWD STD. PLAN W-21.
27. INSTALL 8"x8"x8"x8" CROSS WITH THRUST BLOCK PER LACWD STD. PLAN W-21.
38. INSTALL 8" MJxMJ 22.5° BEND WITH THRUST BLOCK PER LACWD STD. PLAN W-21.
39. INSTALL 8" MJxMJ 45° BEND WITH THRUST BLOCK PER LACWD STD. PLAN W-21.
44. INSTALL 4" MJxMJ COUPLING.
50. ABANDON A SEAL EXISTING WATER SYSTEM IN PLACE AND CUT, PLUG, AND CEMENT EXISTING PIPE END PER LACWD STD. PLAN W-22
51. INSTALL 4" LINE STOP.

NOTE:
HORIZONTAL AND VERTICAL LOCATIONS TO BE VERIFIED IN THE FIELD AND ENGINEER NOTIFIED OF ANY DISCREPANCIES PRIOR TO CONSTRUCTION.

RKA NORTH
20' 10' 0' 20'
GRAPHIC SCALE: 1"=20'

811 Know what's below. Call before you dig.

BASIS OF BEARING:
THE BEARINGS AND COORDINATES HEREON ARE BASED ON THE CALIFORNIA COORDINATE SYSTEM OF 1983 (NAD83), ZONE 5 DATUM, BASED LOCALLY ON A LINE BETWEEN NGS CONTROL POINTS EV3794 AND EV3841, BEING N84°35'29"W, 1991.35 EPOCH.

BENCHMARK:
LOS ANGELES COUNTY PUBLIC WORKS BENCH MARK NO. 1G4120.
DESCRIPTION: (SBM MON IN S. END C.B. 5FT N/O BCR @ NE COR. SAN GABRIEL BLVD & HUNTINGTON DR MKD (BM 10-5A 1966).
ELEVATION = 601.950

Δ	DATE	DESCRIPTION	APP'D	DATE

REVISIONS

CITY OF SOUTH PASADENA

APPROVED BY: _____ DATE

REGISTERED PROFESSIONAL ENGINEER — KURT R. PEDERSEN — NO. 69745 — CIVIL — STATE OF CALIFORNIA

RKA CONSULTING GROUP
398 S. LEMON CREEK DRIVE · SUITE E WALNUT, CA 91789
(909) 594-9702 · FAX (909) 594-2658
WWW.RKAGROUP.COM

5-13-25
KURT R. PEDERSEN RCE 69745 DATE

CITY OF SOUTH PASADENA

FY2019-20 STREET & WATER IMP.
WATER IMPROVEMENT
MAPLE STREET
FROM FREEMONT AVE TO PRIMEROSE AVE
STREET & WATER IMPROVEMENT PROJECT

SHEET 22 OF 33 SHEETS

DESIGNED BY:
DRAWN BY:
REVIEWED BY: KRP
JOB NO.: 323007
DRAWING NAME: \ACAD\323007\DWG\LSTR21.DWG
PLAN SET: FY19-20 STREET IMPROVEMENT PROJECT
DRAWING LAST UPDATED: 2024-10-17
LATEST MYLAR REVISION DATE: X
MYLAR PLOT DATE: X

MAPLE STREET

MERRIDIAN AVE — **HUNTINGTON DR**

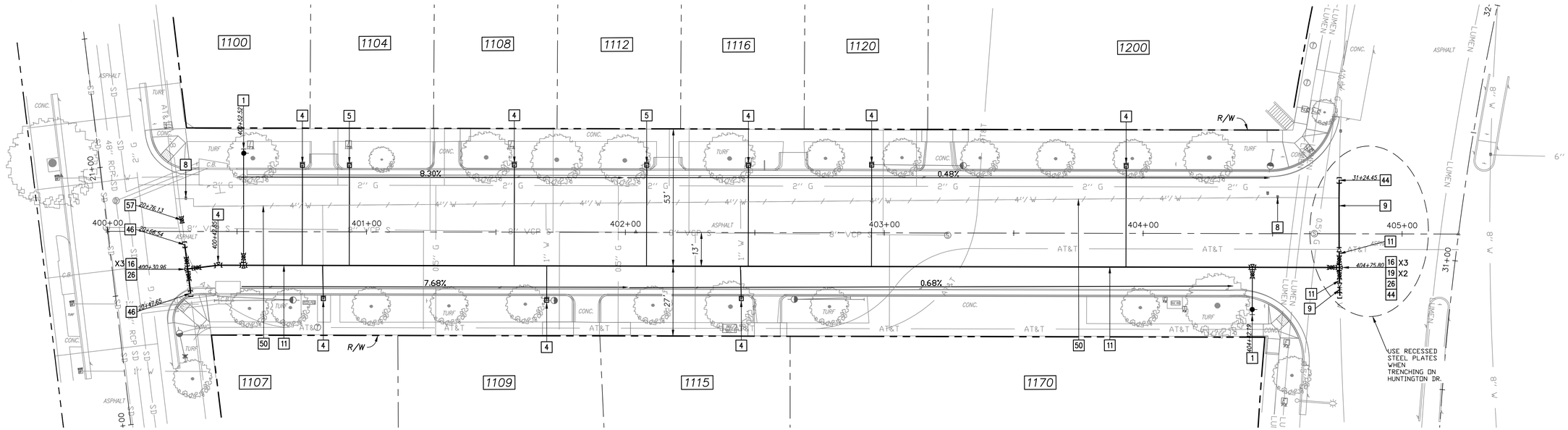

CONSTRUCTION NOTES

1. REMOVE EXISTING FIRE HYDRANT AND VALVE. ABANDON EXISTING FIRE SERVICE LATERAL. INSTALL 6" CLOW MEDALLION FIRE HYDRANT PER CITY FIRE HYDRANT ASSEMBLY DETAIL, W-8 INCLUDING TRENCHING PER LACWD STD. PLAN W-46.
4. CONSTRUCT NEW 1" WATER SERVICE PER LACWD STD. PLAN W-5. REPLACE METER AND METER BOX. 1" WATER METER TO BE PROVIDED BY THE CITY.
5. CONSTRUCT NEW 1" WATER SERVICE PER LACWD STD. PLAN W-5. REPLACE METER AND METER BOX. INSTALL 1" TO 3/4" BUSHING.
8. REMOVE EXIST. VALVE CAN AND COVER. FILL WITH C.L.S.M. UP TO A.C.. PATCH WITH HMA.
9. INSTALL 4" CL. 52, D.I.P. WATER MAIN LINE, INCLUDING TRENCHING PER LACDW STD. PLAN W-46. INCLUDES TYTON FIELD LOK 350 GASKETS WHERE LESS THAN 10' FROM SEWER MAIN.
11. INSTALL 8" CL. 52, D.I.P. WATER MAIN LINE, INCLUDING TRENCHING PER LACDW STD. PLAN W-46. INCLUDES TYTON FIELD LOK 350 GASKETS WHERE LESS THAN 10' FROM SEWER MAIN.
16. INSTALL 8" MUELLER RESILIENT WEDGE GATE VALVE WITH VALVE BOX AND COVER PER LACWD STD. PLAN W-15.
19. INSTALL 8"x4" REDUCER
26. INSTALL 8"x8"x8" TEE WITH THRUST BLOCK PER LACWD STD. PLAN W-21.
44. INSTALL 4" MJxMJ COUPLING.
46. INSTALL 8" MJxMJ COUPLING.
50. ABANDON A SEAL EXISTING WATER SYSTEM IN PLACE AND CUT, PLUG, AND CEMENT EXISTING PIPE END PER LACWD STD. PLAN W-22
57. INSTALL 8" LINE STOP.

NOTE:
HORIZONTAL AND VERTICAL LOCATIONS TO BE VERIFIED IN THE FIELD AND ENGINEER NOTIFIED OF ANY DISCREPANCIES PRIOR TO CONSTRUCTION.

NORTH

20' 10' 0' 20' 40'

GRAPHIC SCALE: 1"=20'

811 Know what's below. Call before you dig.

BASIS OF BEARING:
THE BEARINGS AND COORDINATES HEREON ARE BASED ON THE CALIFORNIA COORDINATE SYSTEM OF 1983 (NAD83), ZONE 5 DATUM, BASED LOCALLY ON A LINE BETWEEN NGS CONTROL POINTS EV3794 AND EV3841, BEING N84°35'29"W, 1991.35 EPOCH.

BENCHMARK:
LOS ANGELES COUNTY PUBLIC WORKS BENCH MARK NO. 1G4120.
DESCRIPTION: (SBM MON IN S. END C.B. 5FT N/O BCR @ NE COR. SAN GABRIEL BLVD & HUNTINGTON DR MKD (BM 10-5A 1966).
ELEVATION = 601.950

Δ	DATE	DESCRIPTION	APP'D	DATE

REVISIONS

CITY OF SOUTH PASADENA

APPROVED BY: _____ DATE

REGISTERED PROFESSIONAL ENGINEER — KURT R. PEDERSEN — NO. 69745 — CIVIL — STATE OF CALIFORNIA

RKA CONSULTING GROUP
398 S. LEMON CREEK DRIVE - SUITE E-WALNUT-CA-91789
(909) 594-9702-FAX (909) 594-2658
WWW.RKAGROUP.COM

KURT R. PEDERSEN RCE 69745 5-13-25 DATE

CITY OF SOUTH PASADENA

FY2019-20 STREET & WATER IMP.
WATER IMPROVEMENT
MAPLE STREET
FROM MERRIDIAN AVE TO HUNTINGTON DR
STREET & WATER IMPROVEMENT PROJECT

SHEET 23 OF 33 SHEETS

REVIEWED BY: KRP
DRAWN BY:
DESIGNED BY:
JOB NO.: 323007
DRAWING NAME: \ACAD\323007\DWG\LSTR22.DWG
PLAN SET: FY19-20 STREET IMPROVEMENT PROJECT
LATEST MYLAR REVISION DATE: X
DRAWING LAST UPDATED: 2024-10-17
MYLAR PLOT DATE: X

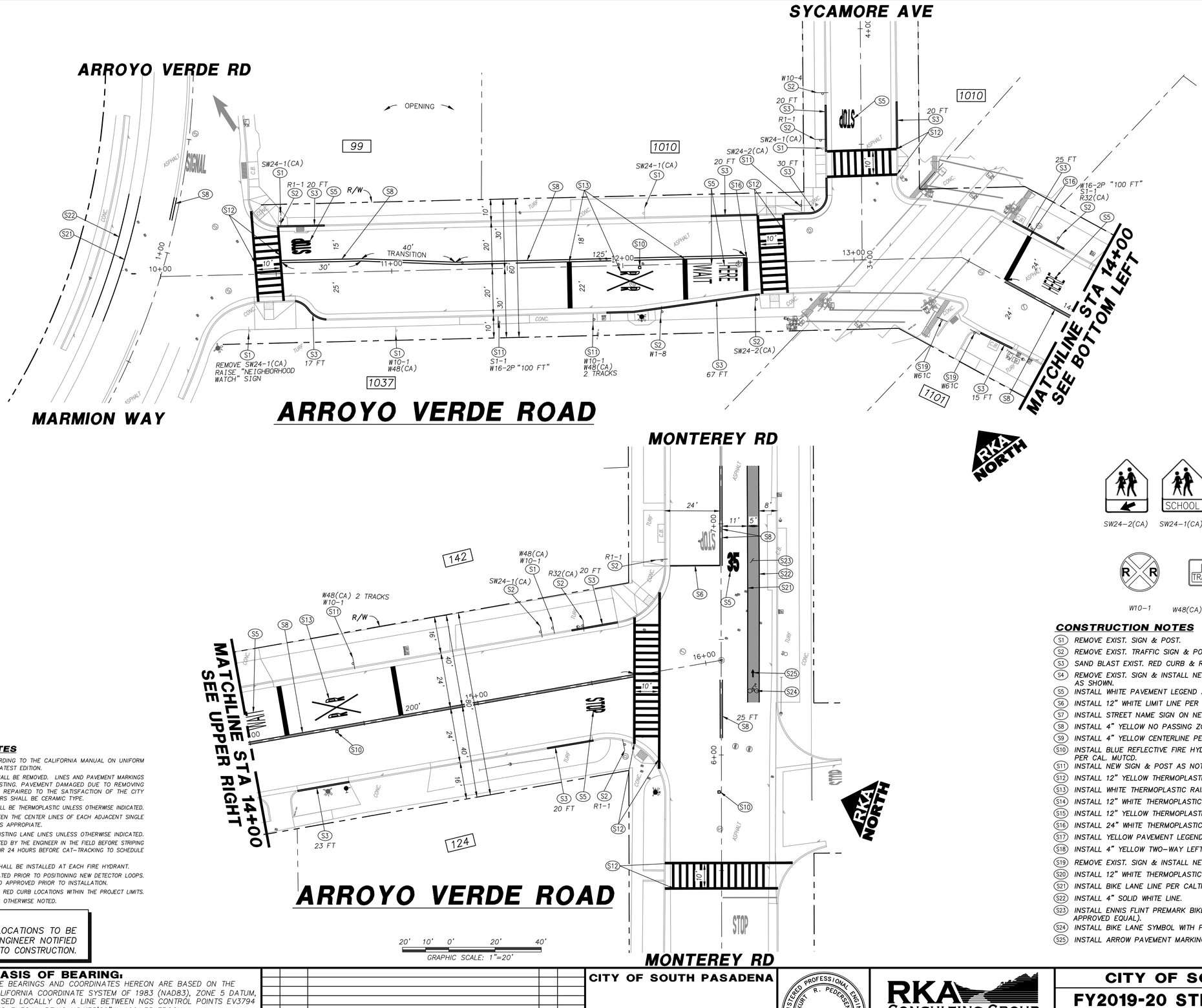

GENERAL STRIPING NOTES

1. SIGNING AND STRIPING SHALL BE ACCORDING TO THE CALIFORNIA MANUAL ON UNIFORM TRAFFIC CONTROL DEVICES (CAMUTCD), LATEST EDITION.
2. ALL CONFLICTING SIGNING AND STRIPING SHALL BE REMOVED. LINES AND PAVEMENT MARKINGS SHALL BE REMOVED BY WET SANDBLASTING. PAVEMENT DAMAGED DUE TO REMOVING RAISED PAVEMENT MARKERS SHALL BE REPAIRED TO THE SATISFACTION OF THE CITY ENGINEER. ALL RAISED PAVEMENT MARKERS SHALL BE CERAMIC TYPE.
3. ALL ARROWS AND PAVEMENT MARKINGS SHALL BE THERMOPLASTIC UNLESS OTHERWISE INDICATED.
4. LANE WIDTHS SHALL BE MEASURED BETWEEN THE CENTER LINES OF EACH ADJACENT SINGLE OR DOUBLE STRIPE OR FACE OF CURB AS APPROPIATE.
5. PROPOSED LANE LINES SHALL MATCH EXISTING LANE LINES UNLESS OTHERWISE INDICATED.
6. ALL CAT-TRACK LAYOUTS MUST BE INSPECTED BY THE ENGINEER IN THE FIELD BEFORE STRIPING BEGINS, CONTACT PUBLIC WORKS INSPECTOR 24 HOURS BEFORE CAT-TRACKING TO SCHEDULE INSPECTION.
7. REFLECTIVE BLUE PAVEMENT MARKERS SHALL BE INSTALLED AT EACH FIRE HYDRANT.
8. ALL NECESSARY STRIPING SHALL BE LOCATED PRIOR TO POSITIONING NEW DETECTOR LOOPS. LOOP LAYOUTS SHALL BE INSPECTED AND APPROVED PRIOR TO INSTALLATION.
9. CONTRACTOR SHALL REPAINT ALL EXISTING RED CURB LOCATIONS WITHIN THE PROJECT LIMITS.
10. ALL STRIPING SHALL BE 4" WIDE UNLESS OTHERWISE NOTED.

NOTE:
HORIZONTAL AND VERTICAL LOCATIONS TO BE VERIFIED IN THE FIELD AND ENGINEER NOTIFIED OF ANY DISCREPANCIES PRIOR TO CONSTRUCTION.

SIGNS LEGEND



SW24-2(CA) SW24-1(CA) S1-1 R32(CA) W61C W16-2P "100 FEET"



W10-1 W48(CA) 2 TRACKS W1-8 W10-4 R1-1

CONSTRUCTION NOTES

- (S1) REMOVE EXIST. SIGN & POST.
- (S2) REMOVE EXIST. TRAFFIC SIGN & POST AND INSTALL NEW SIGN & POST AS NOTED.
- (S3) SAND BLAST EXIST. RED CURB & REPAINT WITH 2 COATS OF RED PAINT.
- (S4) REMOVE EXIST. SIGN & INSTALL NEW TRAFFIC SIGN ON EXIST. STREET LIGHT POLE AS SHOWN.
- (S5) INSTALL WHITE PAVEMENT LEGEND AS SHOWN AND PER CALTRANS STD. PLANS.
- (S6) INSTALL 12" WHITE LIMIT LINE PER CALTRANS STD. PLAN A24E.
- (S7) INSTALL STREET NAME SIGN ON NEW POST PER CITY OF SOUTH PASADENA STDS.
- (S8) INSTALL 4" YELLOW NO PASSING ZONE PER CALTRANS STD. PLAN A20A, DETAIL 21.
- (S9) INSTALL 4" YELLOW CENTERLINE PER CALTRANS STD. PLAN A20A, DETAIL 2.
- (S10) INSTALL BLUE REFLECTIVE FIRE HYDRANT PAVEMENT MARKER PER FIGURE 3B-102(CA) PER CAL. MUTCD.
- (S11) INSTALL NEW SIGN & POST AS NOTED.
- (S12) INSTALL 12" YELLOW THERMOPLASTIC LADDER CROSSWALK PER CALTRANS STD. PLAN A24F.
- (S13) INSTALL WHITE THERMOPLASTIC RAILROAD CROSSING SYMBOL PER CALTRANS STD. PLAN A24B.
- (S14) INSTALL 12" WHITE THERMOPLASTIC BASIC CROSSWALK PER CALTRANS STD. PLAN A24F.
- (S15) INSTALL 12" YELLOW THERMOPLASTIC BASIC CROSSWALK PER CALTRANS STD. PLAN A24F.
- (S16) INSTALL 24" WHITE THERMOPLASTIC LIMIT LINE PER CALTRANS STD. PLAN A24E.
- (S17) INSTALL YELLOW PAVEMENT LEGEND AS SHOWN PER CALTRANS STD. PLANS.
- (S18) INSTALL 4" YELLOW TWO-WAY LEFT TURN LANES PER CALTRANS STD. PLAN A20B, DETAIL 32.
- (S19) REMOVE EXIST. SIGN & INSTALL NEW TRAFFIC SIGN ON EXIST. POST AS SHOWN.
- (S20) INSTALL 12" WHITE THERMOPLASTIC LADDER CROSSWALK PER CALTRANS STD. PLAN A24F.
- (S21) INSTALL BIKE LANE LINE PER CALTRANS STD. PLAN A20D, DETAIL 39.
- (S22) INSTALL 4" SOLID WHITE LINE.
- (S23) INSTALL ENNIS FLINT PREMARK BIKE LANE GREEN PAVEMENT MARKING WITH VIZIGRIP (OR CITY APPROVED EQUAL).
- (S24) INSTALL BIKE LANE SYMBOL WITH PERSON PER CALTRANS STD. PLAN A24C.
- (S25) INSTALL ARROW PAVEMENT MARKING AS SHOWN PER CALTRANS STD. PLAN A24A.

811 Know what's below. Call before you dig.

BASIS OF BEARING:
THE BEARINGS AND COORDINATES HEREON ARE BASED ON THE CALIFORNIA COORDINATE SYSTEM OF 1983 (NAD83), ZONE 5 DATUM, BASED LOCALLY ON A LINE BETWEEN NGS CONTROL POINTS EV3794 AND EV3841, BEING N84°35'29"W, 1991.35 EPOCH.

BENCHMARK:
LOS ANGELES COUNTY PUBLIC WORKS BENCH MARK NO. 1C4120.
DESCRIPTION: (SBM MON IN S. END C.B. 5FT N/O BCR @ NE COR. SAN GABRIEL BLVD & HUNTINGTON DR MKD (BM 10-5A 1966).
ELEVATION = 601.950

△	DATE	DESCRIPTION	APP'D	DATE

REVISIONS

CITY OF SOUTH PASADENA

APPROVED BY: _____ DATE

REGISTERED PROFESSIONAL ENGINEER — KURT R. PEDERSEN — NO. 69745 — CIVIL — STATE OF CALIFORNIA

RKA CONSULTING GROUP
398 S. LEMON CREEK DRIVE - SUITE E-WALNUT-CA-91789
(909) 594-9702-FAX (909) 594-2658
WWW.RKAGROUP.COM

5-13-25
KURT R. PEDERSEN RCE 69745 DATE

CITY OF SOUTH PASADENA

FY2019-20 STREET & WATER IMP.

STRIPING PLAN
ARROYO VERDE ROAD

STREET & WATER IMPROVEMENT PROJECT

SHEET 24 OF 33 SHEETS

DESIGNED BY:
DRAWN BY:
REVIEWED BY: KRP
JOB NO.: 323007
DRAWING NAME: \ACAD\323007\DWG\LSTR23.DWG
PLAN SET: FY19-20 STREET IMPROVEMENT PROJECT
LATEST MYLAR REVISION DATE: X
DRAWING LAST UPDATED: 2024-10-17
MYLAR PLOT DATE: X

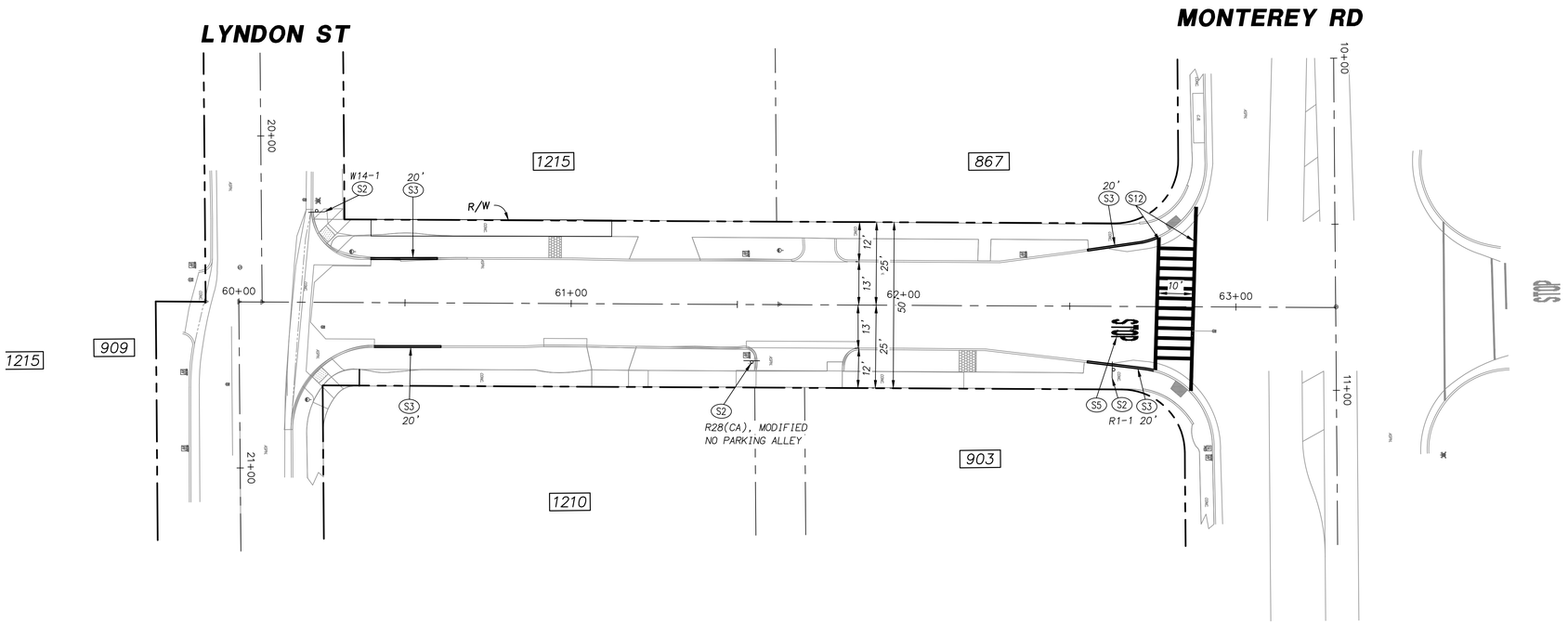

GLENDON WAY

SIGNS LEGEND

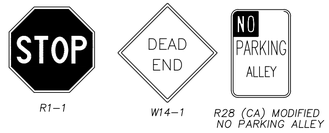

R1-1 W14-1 R28 (CA) MODIFIED NO PARKING ALLEY

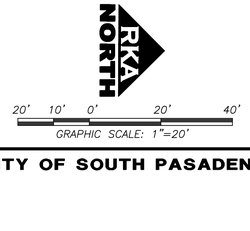

GRAPHIC SCALE: 1"=20'

GENERAL STRIPING NOTES

1. SIGNING AND STRIPING SHALL BE ACCORDING TO THE CALIFORNIA MANUAL ON UNIFORM TRAFFIC CONTROL DEVICES (CAMUTCD), LATEST EDITION.
2. ALL CONFLICTING SIGNING AND STRIPING SHALL BE REMOVED. LINES AND PAVEMENT MARKINGS SHALL BE REMOVED BY WET SANDBLASTING. PAVEMENT DAMAGED DUE TO REMOVING RAISED PAVEMENT MARKERS SHALL BE REPAIRED TO THE SATISFACTION OF THE CITY ENGINEER. ALL RAISED PAVEMENT MARKERS SHALL BE CERAMIC TYPE.
3. ALL ARROWS AND PAVEMENT MARKINGS SHALL BE THERMOPLASTIC UNLESS OTHERWISE INDICATED.
4. LANE WIDTHS SHALL BE MEASURED BETWEEN THE CENTER LINES OF EACH ADJACENT SINGLE OR DOUBLE STRIPE OR FACE OF CURB AS APPROPIATE.
5. PROPOSED LANE LINES SHALL MATCH EXISTING LANE LINES UNLESS OTHERWISE INDICATED.
6. ALL CAT-TRACK LAYOUTS MUST BE INSPECTED BY THE ENGINEER IN THE FIELD BEFORE STRIPING BEGINS, CONTACT PUBLIC WORKS INSPECTOR 24 HOURS BEFORE CAT-TRACKING TO SCHEDULE INSPECTION.
7. REFLECTIVE BLUE PAVEMENT MARKERS SHALL BE INSTALLED AT EACH FIRE HYDRANT.
8. ALL NECESSARY STRIPING SHALL BE LOCATED PRIOR TO POSITIONING NEW DETECTOR LOOPS. LOOP LAYOUTS SHALL BE INSPECTED AND APPROVED PRIOR TO INSTALLATION.
9. CONTRACTOR SHALL REPAINT ALL EXISTING RED CURB LOCATIONS WITHIN THE PROJECT LIMITS.
10. ALL STRIPING SHALL BE 4" WIDE UNLESS OTHERWISE NOTED.

NOTE:
HORIZONTAL AND VERTICAL LOCATIONS TO BE VERIFIED IN THE FIELD AND ENGINEER NOTIFIED OF ANY DISCREPANCIES PRIOR TO CONSTRUCTION.

CONSTRUCTION NOTES

(S1) REMOVE EXIST. SIGN & POST.
(S2) REMOVE EXIST. TRAFFIC SIGN & POST AND INSTALL NEW SIGN & POST AS NOTED.
(S3) SAND BLAST EXIST. RED CURB & REPAINT WITH 2 COATS OF RED PAINT.
(S4) REMOVE EXIST. SIGN & INSTALL NEW TRAFFIC SIGN ON EXIST. STREET LIGHT POLE AS SHOWN.
(S5) INSTALL WHITE PAVEMENT LEGEND AS SHOWN AND PER CALTRANS STD. PLANS.
(S6) INSTALL 12" WHITE LIMIT LINE PER CALTRANS STD. PLAN A24E.
(S7) INSTALL STREET NAME SIGN ON NEW POST PER CITY OF SOUTH PASADENA STDS.
(S8) INSTALL 4" YELLOW NO PASSING ZONE PER CALTRANS STD. PLAN A20A, DETAIL 21.
(S9) INSTALL 4" YELLOW CENTERLINE PER CALTRANS STD. PLAN A20A, DETAIL 2.
(S10) INSTALL BLUE REFLECTIVE FIRE HYDRANT PAVEMENT MARKER PER FIGURE 38-102(CA) PER CAL. MUTCD.
(S11) INSTALL NEW SIGN & POST AS NOTED.
(S12) INSTALL 12" YELLOW THERMOPLASTIC LADDER CROSSWALK PER CALTRANS STD. PLAN A24F.
(S13) INSTALL WHITE THERMOPLASTIC RAILROAD CROSSING SYMBOL PER CALTRANS STD. PLAN A24B.
(S14) INSTALL 12" WHITE THERMOPLASTIC BASIC CROSSWALK PER CALTRANS STD. PLAN A24F.
(S15) INSTALL 12" YELLOW THERMOPLASTIC BASIC CROSSWALK PER CALTRANS STD. PLAN A24F.
(S16) INSTALL 24" WHITE THERMOPLASTIC LIMIT LINE PER CALTRANS STD. PLAN A24E.

811 Know what's Call before you dig.

BASIS OF BEARING:
THE BEARINGS AND COORDINATES HEREON ARE BASED ON THE CALIFORNIA COORDINATE SYSTEM OF 1983 (NAD83), ZONE 5 DATUM, BASED LOCALLY ON A LINE BETWEEN NGS CONTROL POINTS EV3794 AND EV3841, BEING N84°35'29"W, 1991.35 EPOCH.

BENCHMARK:
LOS ANGELES COUNTY PUBLIC WORKS BENCH MARK NO. 1G4120.
DESCRIPTION: (SBM MON IN S. END C.B. 5FT N/O BCR @ NE COR. SAN GABRIEL BLVD & HUNTINGTON DR MKD (BM 10-5A 1966).
ELEVATION = 601.950

Δ	DATE	DESCRIPTION	APP'D	DATE

REVISIONS

CITY OF SOUTH PASADENA

APPROVED BY: _____ DATE

REGISTERED PROFESSIONAL ENGINEER — KURT R. PEDERSEN — NO. 69745 — CIVIL — STATE OF CALIFORNIA

RKA CONSULTING GROUP
396 S. LEMON CREEK DRIVE · SUITE E · WALNUT · CA · 91789
(909) 594-9702 · FAX (909) 594-2658
WWW.RKAGROUP.COM

5-13-25
KURT R. PEDERSEN RCE 69745 DATE

CITY OF SOUTH PASADENA

FY2019-20 STREET & WATER IMP.
STRIPING PLAN
GLENDON WAY

STREET & WATER IMPROVEMENT PROJECT

SHEET 25 OF 33 SHEETS

DRAWING NAME: X:\CAD\23007\DWG\LSTR24.DWG
JOB NO: 23007
DESIGNED BY:
DRAWN BY:
REVIEWED BY: KRP
PLAN SET: FY19-20 STREET IMPROVEMENT PROJECT
LATEST MYLAR REVISION DATE: X
DRAWING LAST UPDATED: 2024-10-17
MYLAR PLOT DATE: X

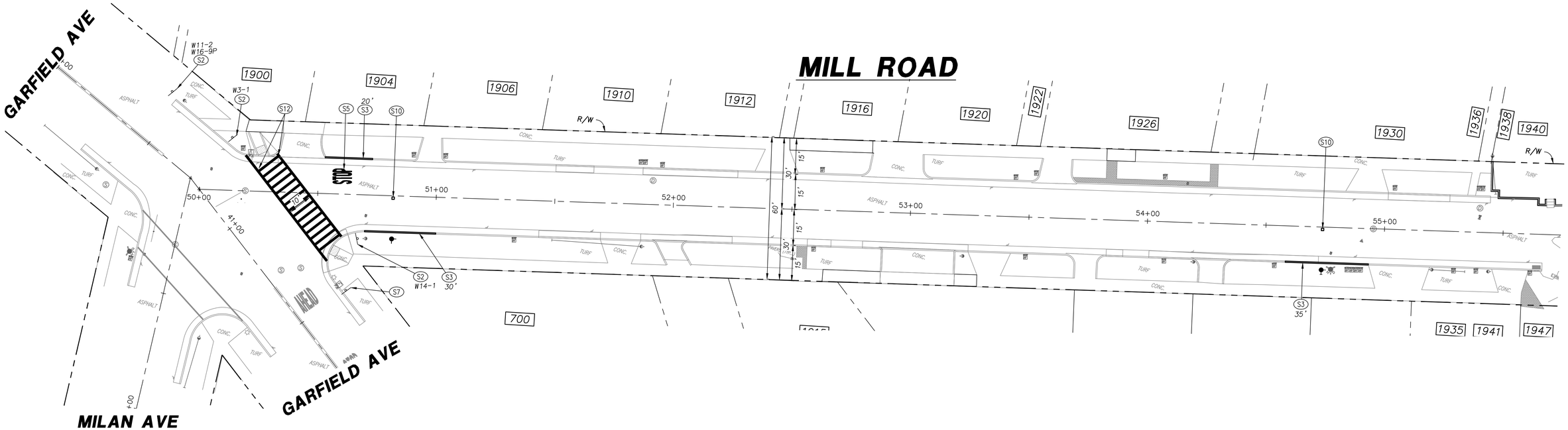

SIGNS LEGEND



GENERAL STRIPING NOTES

1. SIGNING AND STRIPING SHALL BE ACCORDING TO THE CALIFORNIA MANUAL ON UNIFORM TRAFFIC CONTROL DEVICES (CAMUTCD), LATEST EDITION.
2. ALL CONFLICTING SIGNING AND STRIPING SHALL BE REMOVED. LINES AND PAVEMENT MARKINGS SHALL BE REMOVED BY WET SANDBLASTING. PAVEMENT DAMAGED DUE TO REMOVING RAISED PAVEMENT MARKERS SHALL BE REPAIRED TO THE SATISFACTION OF THE CITY ENGINEER. ALL RAISED PAVEMENT MARKERS SHALL BE CERAMIC TYPE.
3. ALL ARROWS AND PAVEMENT MARKINGS SHALL BE THERMOPLASTIC UNLESS OTHERWISE INDICATED.
4. LANE WIDTHS SHALL BE MEASURED BETWEEN THE CENTER LINES OF EACH ADJACENT SINGLE OR DOUBLE STRIPE OR FACE OF CURB AS APPROPIATE.
5. PROPOSED LANE LINES SHALL MATCH EXISTING LANE LINES UNLESS OTHERWISE INDICATED.
6. ALL CAT-TRACK LAYOUTS MUST BE INSPECTED BY THE ENGINEER IN THE FIELD BEFORE STRIPING BEGINS, CONTACT PUBLIC WORKS INSPECTOR 24 HOURS BEFORE CAT-TRACKING TO SCHEDULE INSPECTION.
7. REFLECTIVE BLUE PAVEMENT MARKERS SHALL BE INSTALLED AT EACH FIRE HYDRANT.
8. ALL NECESSARY STRIPING SHALL BE LOCATED PRIOR TO POSITIONING NEW DETECTOR LOOPS. LOOP LAYOUTS SHALL BE INSPECTED AND APPROVED PRIOR TO INSTALLATION.
9. CONTRACTOR SHALL REPAINT ALL EXISTING RED CURB LOCATIONS WITHIN THE PROJECT LIMITS.
10. ALL STRIPING SHALL BE 4" WIDE UNLESS OTHERWISE NOTED.

NOTE:
HORIZONTAL AND VERTICAL LOCATIONS TO BE VERIFIED IN THE FIELD AND ENGINEER NOTIFIED OF ANY DISCREPANCIES PRIOR TO CONSTRUCTION.

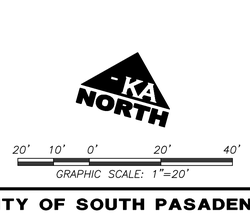

CONSTRUCTION NOTES

(S1) REMOVE EXIST. SIGN & POST.
(S2) REMOVE EXIST. TRAFFIC SIGN & POST AND INSTALL NEW SIGN & POST AS NOTED.
(S3) SAND BLAST EXIST. RED CURB & REPAINT WITH 2 COATS OF RED PAINT.
(S4) REMOVE EXIST. SIGN & INSTALL NEW TRAFFIC SIGN ON EXIST. STREET LIGHT POLE AS SHOWN.
(S5) INSTALL WHITE PAVEMENT LEGEND AS SHOWN AND PER CALTRANS STD. PLANS.
(S6) INSTALL 12" WHITE LIMIT LINE PER CALTRANS STD. PLAN A24E.
(S7) INSTALL STREET NAME SIGN ON NEW POST PER CITY OF SOUTH PASADENA STDS.
(S8) INSTALL 4" YELLOW NO PASSING ZONE PER CALTRANS STD. PLAN A20A, DETAIL 21.
(S9) INSTALL 4" YELLOW CENTERLINE PER CALTRANS STD. PLAN A20A, DETAIL 2.
(S10) INSTALL BLUE REFLECTIVE FIRE HYDRANT PAVEMENT MARKER PER FIGURE 3B-102(CA) PER CAL. MUTCD.
(S11) INSTALL NEW SIGN & POST AS NOTED.
(S12) INSTALL 12" YELLOW THERMOPLASTIC LADDER CROSSWALK PER CALTRANS STD. PLAN A24F.
(S13) INSTALL WHITE THERMOPLASTIC RAILROAD CROSSING SYMBOL PER CALTRANS STD. PLAN A24B.
(S14) INSTALL 12" WHITE THERMOPLASTIC BASIC CROSSWALK PER CALTRANS STD. PLAN A24F.
(S15) INSTALL 12" YELLOW THERMOPLASTIC BASIC CROSSWALK PER CALTRANS STD. PLAN A24F.
(S16) INSTALL 24" WHITE THERMOPLASTIC LIMIT LINE PER CALTRANS STD. PLAN A24E.

811 Know what's Call before you dig. below.

BASIS OF BEARING:
THE BEARINGS AND COORDINATES HEREON ARE BASED ON THE CALIFORNIA COORDINATE SYSTEM OF 1983 (NAD83), ZONE 5 DATUM, BASED LOCALLY ON A LINE BETWEEN NGS CONTROL POINTS EV3794 AND EV3841, BEING N84°35'29"W, 1991.35 EPOCH.

BENCHMARK:
LOS ANGELES COUNTY PUBLIC WORKS BENCH MARK NO. 1G4120.
DESCRIPTION: (SBM MON IN S. END C.B. 5FT N/O BCR @ NE COR. SAN GABRIEL BLVD & HUNTINGTON DR MKD (BM 10-5A 1966).
ELEVATION = 601.950

Δ	DATE	DESCRIPTION	APP'D	DATE

REVISIONS

CITY OF SOUTH PASADENA

APPROVED BY: _____ DATE

REGISTERED PROFESSIONAL ENGINEER — KURT R. PEDERSEN — NO. 69745 — CIVIL — STATE OF CALIFORNIA

RKA CONSULTING GROUP
398 S. LEMON CREEK DRIVE · SUITE E · WALNUT · CA · 91789
(909) 594-9702 · FAX (909) 594-2658
WWW.RKAGROUP.COM

5-13-25
KURT R. PEDERSEN RCE 69745 DATE

CITY OF SOUTH PASADENA

FY2019-20 STREET & WATER IMP.

STRIPING PLAN
MILL ROAD

STREET & WATER IMPROVEMENT PROJECT

SHEET 26 OF 33 SHEETS

DRAWING NAME: \ACAD\323007\DWG\LSTR25.DWG
JOB NO: 323007
DESIGNED BY:
DRAWN BY:
REVIEWED BY: KRP
PLAN SET: FY19-20 STREET IMPROVEMENT PROJECT
LATEST MILAR REPRODUCTION DATE: X
DRAWING LAST UPDATED: 2024-10-17
MILAR PLOT DATE: X

MILAN AVENUE

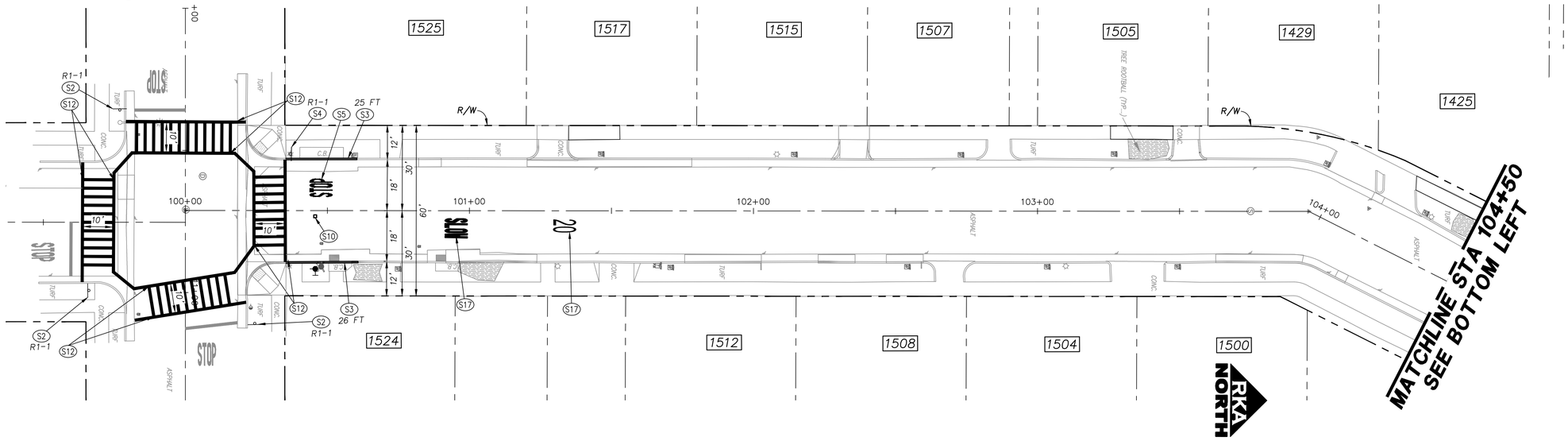

MILAN AVENUE

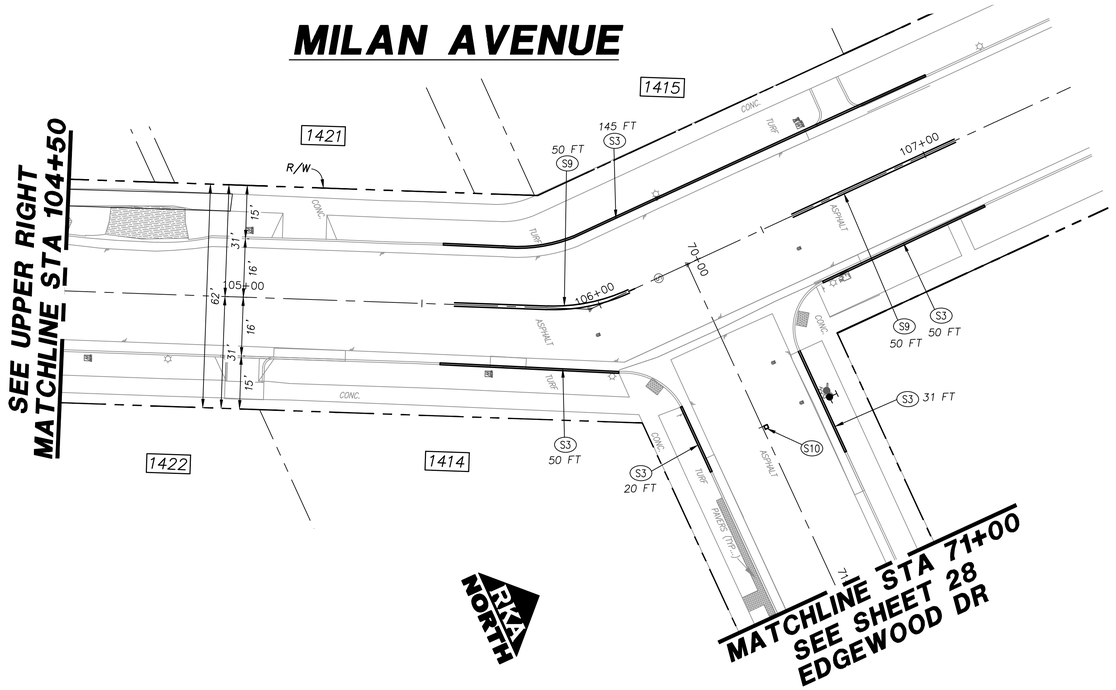

SIGNS LEGEND



R1-1

CONSTRUCTION NOTES

- (S1) REMOVE EXIST. SIGN & POST.
- (S2) REMOVE EXIST. TRAFFIC SIGN & POST AND INSTALL NEW SIGN & POST AS NOTED.
- (S3) SAND BLAST EXIST. RED CURB & REPAINT WITH 2 COATS OF RED PAINT.
- (S4) REMOVE EXIST. SIGN & INSTALL NEW TRAFFIC SIGN ON EXIST. STREET LIGHT POLE AS SHOWN.
- (S5) INSTALL WHITE PAVEMENT LEGEND AS SHOWN AND PER CALTRANS STD. PLANS.
- (S6) INSTALL 12" WHITE LIMIT LINE PER CALTRANS STD. PLAN A24E.
- (S7) INSTALL STREET NAME SIGN ON NEW POST PER CITY OF SOUTH PASADENA STDS.
- (S8) INSTALL 4" YELLOW NO PASSING ZONE PER CALTRANS STD. PLAN A20A, DETAIL 21.
- (S9) INSTALL 4" YELLOW CENTERLINE PER CALTRANS STD. PLAN A20A, DETAIL 2.
- (S10) INSTALL BLUE REFLECTIVE FIRE HYDRANT PAVEMENT MARKER PER FIGURE 3B-102(CA) PER CAL. MUTCD.
- (S11) INSTALL NEW SIGN & POST AS NOTED.
- (S12) INSTALL 12" YELLOW THERMOPLASTIC LADDER CROSSWALK PER CALTRANS STD. PLAN A24F.
- (S13) INSTALL WHITE THERMOPLASTIC RAILROAD CROSSING SYMBOL PER CALTRANS STD. PLAN A24B.
- (S14) INSTALL 12" WHITE THERMOPLASTIC BASIC CROSSWALK PER CALTRANS STD. PLAN A24F.
- (S15) INSTALL 12" YELLOW THERMOPLASTIC BASIC CROSSWALK PER CALTRANS STD. PLAN A24F.
- (S16) INSTALL 24" WHITE THERMOPLASTIC LIMIT LINE PER CALTRANS STD. PLAN A24E.
- (S17) INSTALL YELLOW PAVEMENT LEGEND AS SHOWN PER CALTRANS STD. PLANS.

GENERAL STRIPING NOTES

1. SIGNING AND STRIPING SHALL BE ACCORDING TO THE CALIFORNIA MANUAL ON UNIFORM TRAFFIC CONTROL DEVICES (CAMUTCD), LATEST EDITION.
2. ALL CONFLICTING SIGNING AND STRIPING SHALL BE REMOVED. LINES AND PAVEMENT MARKINGS SHALL BE REMOVED BY WET SANDBLASTING. PAVEMENT DAMAGED DUE TO REMOVING RAISED PAVEMENT MARKERS SHALL BE REPAIRED TO THE SATISFACTION OF THE CITY ENGINEER. ALL RAISED PAVEMENT MARKERS SHALL BE CERAMIC TYPE.
3. ALL ARROWS AND PAVEMENT MARKINGS SHALL BE THERMOPLASTIC UNLESS OTHERWISE INDICATED.
4. LANE WIDTHS SHALL BE MEASURED BETWEEN THE CENTER LINES OF EACH ADJACENT SINGLE OR DOUBLE STRIPE OR FACE OF CURB AS APPROPIATE.
5. PROPOSED LANE LINES SHALL MATCH EXISTING LANE LINES UNLESS OTHERWISE INDICATED.
6. ALL CAT-TRACK LAYOUTS MUST BE INSPECTED BY THE ENGINEER IN THE FIELD BEFORE STRIPING BEGINS, CONTACT PUBLIC WORKS INSPECTOR 24 HOURS BEFORE CAT-TRACKING TO SCHEDULE INSPECTION.
7. REFLECTIVE BLUE PAVEMENT MARKERS SHALL BE INSTALLED AT EACH FIRE HYDRANT.
8. ALL NECESSARY STRIPING SHALL BE LOCATED PRIOR TO POSITIONING NEW DETECTOR LOOPS. LOOP LAYOUTS SHALL BE INSPECTED AND APPROVED PRIOR TO INSTALLATION.
9. CONTRACTOR SHALL REPAINT ALL EXISTING RED CURB LOCATIONS WITHIN THE PROJECT LIMITS.
10. ALL STRIPING SHALL BE 4" WIDE UNLESS OTHERWISE NOTED.

NOTE:
HORIZONTAL AND VERTICAL LOCATIONS TO BE VERIFIED IN THE FIELD AND ENGINEER NOTIFIED OF ANY DISCREPANCIES PRIOR TO CONSTRUCTION.

20' 10' 0' 20' 40'
GRAPHIC SCALE: 1"=20'

811 Know what's Call before you dig.

BASIS OF BEARING.
THE BEARINGS AND COORDINATES HEREON ARE BASED ON THE CALIFORNIA COORDINATE SYSTEM OF 1983 (NAD83), ZONE 5 DATUM, BASED LOCALLY ON A LINE BETWEEN NGS CONTROL POINTS EV3794 AND EV3841, BEING N84°35'29"W, 1991.35 EPOCH.

BENCHMARK.
LOS ANGELES COUNTY PUBLIC WORKS BENCH MARK NO. 1G4120.
DESCRIPTION: (SBM MON IN S. END C.B. 5FT N/O BCR @ NE COR. SAN GABRIEL BLVD & HUNTINGTON DR MKD (BM 10-5A 1966).
ELEVATION = 601.950

Δ	DATE	DESCRIPTION	APP'D	DATE

REVISIONS

CITY OF SOUTH PASADENA

APPROVED BY: _____ DATE

REGISTERED PROFESSIONAL ENGINEER — KURT R. PEDERSEN — NO. 69745 — CIVIL — STATE OF CALIFORNIA

RKA CONSULTING GROUP
398 S. LEMON CREEK DRIVE - SUITE E-WALNUT, CA 91789
(909) 594-9702 - FAX (909) 594-2658
WWW.RKAGROUP.COM

KURT R. PEDERSEN RCE 69745 5-13-25 DATE

CITY OF SOUTH PASADENA
FY2019-20 STREET & WATER IMP.
STRIPING PLAN
MILAN AVENUE
STREET & WATER IMPROVEMENT PROJECT

SHEET 27 OF 33 SHEETS

DRAWING LAST UPDATED: 2024-10-17
MILAN PLOT DATE: X

PLAN SET: FY19-20 STREET IMPROVEMENT PROJECT
LATEST MILAN REVISION DATE: X

DESIGNED BY:
DRAWN BY:
REVIEWED BY: KRP

JOB NO.: 323007

DRAWING NAME: V:\CAD\323007\DWG\LSTRIPE.DWG

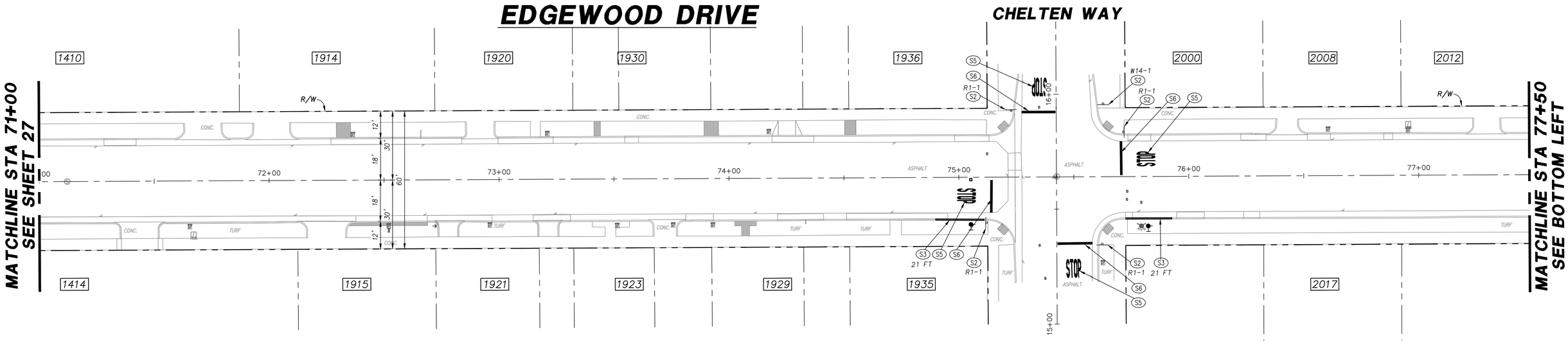

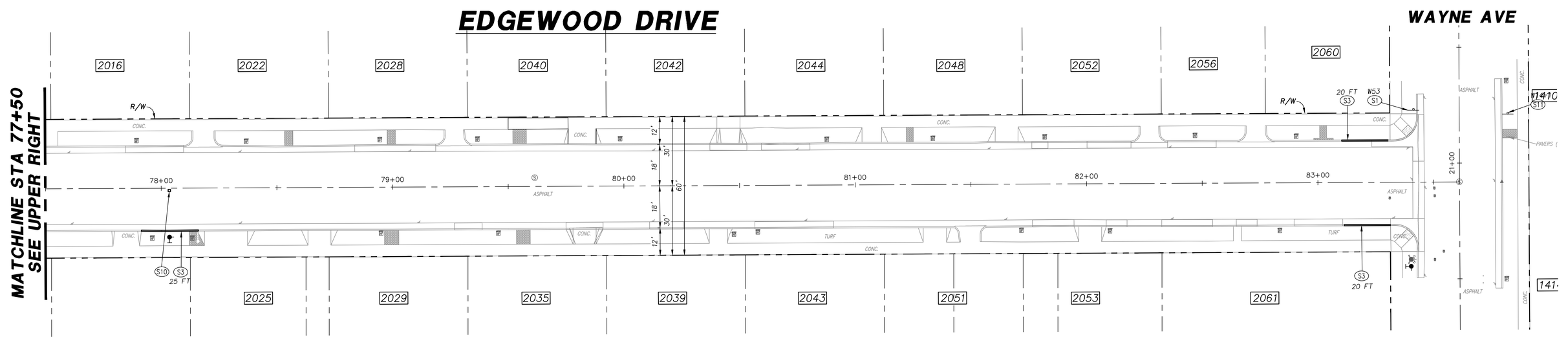

GENERAL STRIPING NOTES

1. SIGNING AND STRIPING SHALL BE ACCORDING TO THE CALIFORNIA MANUAL ON UNIFORM TRAFFIC CONTROL DEVICES (CAMUTCD), LATEST EDITION.
2. ALL CONFLICTING SIGNING AND STRIPING SHALL BE REMOVED. LINES AND PAVEMENT MARKINGS SHALL BE REMOVED BY WET SANDBLASTING. PAVEMENT DAMAGED DUE TO REMOVING RAISED PAVEMENT MARKERS SHALL BE REPAIRED TO THE SATISFACTION OF THE CITY ENGINEER. ALL RAISED PAVEMENT MARKERS SHALL BE CERAMIC TYPE.
3. ALL ARROWS AND PAVEMENT MARKINGS SHALL BE THERMOPLASTIC UNLESS OTHERWISE INDICATED.
4. LANE WIDTHS SHALL BE MEASURED BETWEEN THE CENTER LINES OF EACH ADJACENT SINGLE OR DOUBLE STRIPE OR FACE OF CURB AS APPROPIATE.
5. PROPOSED LANE LINES SHALL MATCH EXISTING LANE LINES UNLESS OTHERWISE INDICATED.
6. ALL CAT-TRACK LAYOUTS MUST BE INSPECTED BY THE ENGINEER IN THE FIELD BEFORE STRIPING BEGINS, CONTACT PUBLIC WORKS INSPECTOR 24 HOURS BEFORE CAT-TRACKING TO SCHEDULE INSPECTION.
7. REFLECTIVE BLUE PAVEMENT MARKERS SHALL BE INSTALLED AT EACH FIRE HYDRANT.
8. ALL NECESSARY STRIPING SHALL BE LOCATED PRIOR TO POSITIONING NEW DETECTOR LOOPS. LOOP LAYOUTS SHALL BE INSPECTED AND APPROVED PRIOR TO INSTALLATION.
9. CONTRACTOR SHALL REPAINT ALL EXISTING RED CURB LOCATIONS WITHIN THE PROJECT LIMITS.
10. ALL STRIPING SHALL BE 4" WIDE UNLESS OTHERWISE NOTED.

NOTE:
HORIZONTAL AND VERTICAL LOCATIONS TO BE VERIFIED IN THE FIELD AND ENGINEER NOTIFIED OF ANY DISCREPANCIES PRIOR TO CONSTRUCTION.

SIGNS LEGEND

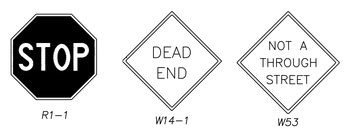

RKA NORTH

20' 10' 0' 20' 40'

GRAPHIC SCALE: 1"=20'

CONSTRUCTION NOTES

- (S1) REMOVE EXIST. SIGN & POST.
- (S2) REMOVE EXIST. TRAFFIC SIGN & POST AND INSTALL NEW SIGN & POST AS NOTED.
- (S3) SAND BLAST EXIST. RED CURB & REPAINT WITH 2 COATS OF RED PAINT.
- (S4) REMOVE EXIST. SIGN & INSTALL NEW TRAFFIC SIGN ON EXIST. STREET LIGHT POLE AS SHOWN.
- (S5) INSTALL WHITE PAVEMENT LEGEND AS SHOWN AND PER CALTRANS STD. PLANS.
- (S6) INSTALL 12" WHITE LIMIT LINE PER CALTRANS STD. PLAN A24E.
- (S7) INSTALL STREET NAME SIGN ON NEW POST PER CITY OF SOUTH PASADENA STDS.
- (S8) INSTALL 4" YELLOW NO PASSING ZONE PER CALTRANS STD. PLAN A20A, DETAIL 21.
- (S9) INSTALL 4" YELLOW CENTERLINE PER CALTRANS STD. PLAN A20A, DETAIL 2.
- (S10) INSTALL BLUE REFLECTIVE FIRE HYDRANT PAVEMENT MARKER PER FIGURE 38-102(CA) PER CAL. MUTCD.
- (S11) INSTALL NEW SIGN & POST AS NOTED.
- (S12) INSTALL 12" YELLOW THERMOPLASTIC LADDER CROSSWALK PER CALTRANS STD. PLAN A24F.
- (S13) INSTALL WHITE THERMOPLASTIC RAILROAD CROSSING SYMBOL PER CALTRANS STD. PLAN A24B.
- (S14) INSTALL 12" WHITE THERMOPLASTIC BASIC CROSSWALK PER CALTRANS STD. PLAN A24F.
- (S15) INSTALL 12" YELLOW THERMOPLASTIC BASIC CROSSWALK PER CALTRANS STD. PLAN A24F.
- (S16) INSTALL 24" WHITE THERMOPLASTIC LIMIT LINE PER CALTRANS STD. PLAN A24E.

811 Know what's Call before you dig.

BASIS OF BEARING.
THE BEARINGS AND COORDINATES HEREON ARE BASED ON THE CALIFORNIA COORDINATE SYSTEM OF 1983 (NAD83), ZONE 5 DATUM, BASED LOCALLY ON A LINE BETWEEN NGS CONTROL POINTS EV3794 AND EV3841, BEING N84°35'29"W, 1991.35 EPOCH.

BENCHMARK.
LOS ANGELES COUNTY PUBLIC WORKS BENCH MARK NO. 1G4120.
DESCRIPTION: (SBM MON IN S. END C.B. 5FT N/O BCR @ NE COR. SAN GABRIEL BLVD & HUNTINGTON DR MKD (BM 10-5A 1966).
ELEVATION = 601.950

Δ	DATE	DESCRIPTION	APP'D	DATE

REVISIONS

CITY OF SOUTH PASADENA

APPROVED BY: _____ DATE

REGISTERED PROFESSIONAL ENGINEER — KURT R. PEDERSEN — NO. 69745 — CIVIL — STATE OF CALIFORNIA

RKA CONSULTING GROUP
398 S. LEMON CREEK DRIVE - SUITE E-WALNUT - CA - 91789
(909) 594-9702 - FAX (909) 594-2658
WWW.RKAGROUP.COM

KURT R. PEDERSEN RCE 69745 5-13-25 DATE

CITY OF SOUTH PASADENA
FY2019-20 STREET & WATER IMP.
STRIPING PLAN
EDGEWOOD DRIVE
STREET & WATER IMPROVEMENT PROJECT

SHEET 28 OF 33 SHEETS

DESIGNED BY:
DRAWN BY:
REVIEWED BY: KRP
JOB NO.: 323007
DRAWING NAME: V:\CAD\323007\DWG\LSTR27.DWG
PLAN SET: FY19-20 STREET IMPROVEMENT PROJECT
LATEST MYLAR REVISION DATE: X
DRAWING LAST UPDATED: 2024-10-17
MYLAR PLOT DATE: X

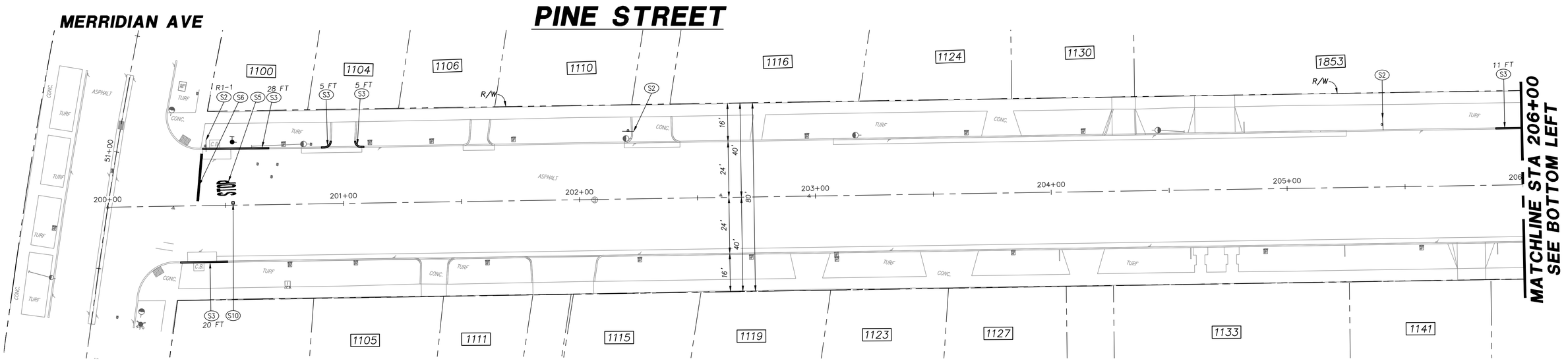

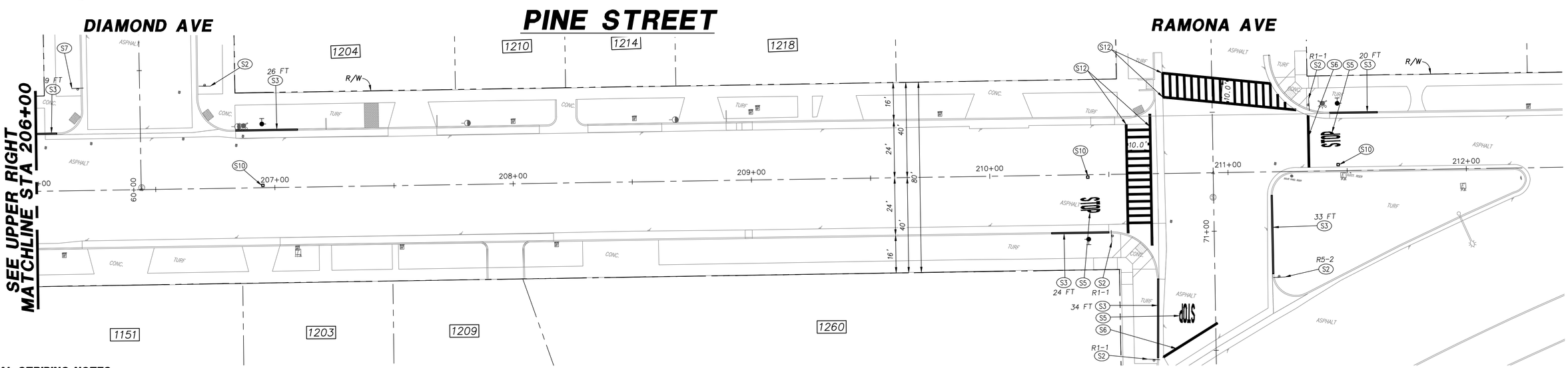

GENERAL STRIPING NOTES

1. SIGNING AND STRIPING SHALL BE ACCORDING TO THE CALIFORNIA MANUAL ON UNIFORM TRAFFIC CONTROL DEVICES (CAMUTCD), LATEST EDITION.
2. ALL CONFLICTING SIGNING AND STRIPING SHALL BE REMOVED. LINES AND PAVEMENT MARKINGS SHALL BE REMOVED BY WET SANDBLASTING. PAVEMENT DAMAGED DUE TO REMOVING RAISED PAVEMENT MARKERS SHALL BE REPAIRED TO THE SATISFACTION OF THE CITY ENGINEER. ALL RAISED PAVEMENT MARKERS SHALL BE CERAMIC TYPE.
3. ALL ARROWS AND PAVEMENT MARKINGS SHALL BE THERMOPLASTIC UNLESS OTHERWISE INDICATED.
4. LANE WIDTHS SHALL BE MEASURED BETWEEN THE CENTER LINES OF EACH ADJACENT SINGLE OR DOUBLE STRIPE OR FACE OF CURB AS APPROPIATE.
5. PROPOSED LANE LINES SHALL MATCH EXISTING LANE LINES UNLESS OTHERWISE INDICATED.
6. ALL CAT-TRACK LAYOUTS MUST BE INSPECTED BY THE ENGINEER IN THE FIELD BEFORE STRIPING BEGINS, CONTACT PUBLIC WORKS INSPECTOR 24 HOURS BEFORE CAT-TRACKING TO SCHEDULE INSPECTION.
7. REFLECTIVE BLUE PAVEMENT MARKERS SHALL BE INSTALLED AT EACH FIRE HYDRANT.
8. ALL NECESSARY STRIPING SHALL BE LOCATED PRIOR TO POSITIONING NEW DETECTOR LOOPS. LOOP LAYOUTS SHALL BE INSPECTED AND APPROVED PRIOR TO INSTALLATION.
9. CONTRACTOR SHALL REPAINT ALL EXISTING RED CURB LOCATIONS WITHIN THE PROJECT LIMITS.
10. ALL STRIPING SHALL BE 4" WIDE UNLESS OTHERWISE NOTED.

NOTE:
HORIZONTAL AND VERTICAL LOCATIONS TO BE VERIFIED IN THE FIELD AND ENGINEER NOTIFIED OF ANY DISCREPANCIES PRIOR TO CONSTRUCTION.

SIGNS LEGEND



R1-1



MODIFIED SIGN R5-2

RKA NORTH

20' 10' 0' 20' 40'

GRAPHIC SCALE: 1"=20'

CONSTRUCTION NOTES

- (S1) REMOVE EXIST. SIGN & POST.
- (S2) REMOVE EXIST. TRAFFIC SIGN & POST AND INSTALL NEW SIGN & POST AS NOTED.
- (S3) SAND BLAST EXIST. RED CURB & REPAINT WITH 2 COATS OF RED PAINT.
- (S4) REMOVE EXIST. SIGN & INSTALL NEW TRAFFIC SIGN ON EXIST. STREET LIGHT POLE AS SHOWN.
- (S5) INSTALL WHITE PAVEMENT LEGEND AS SHOWN AND PER CALTRANS STD. PLANS.
- (S6) INSTALL 12" WHITE LIMIT LINE PER CALTRANS STD. PLAN A24E.
- (S7) INSTALL STREET NAME SIGN ON NEW POST PER CITY OF SOUTH PASADENA STDS.
- (S8) INSTALL 4" YELLOW NO PASSING ZONE PER CALTRANS STD. PLAN A20A, DETAIL 21.
- (S9) INSTALL 4" YELLOW CENTERLINE PER CALTRANS STD. PLAN A20A, DETAIL 2.
- (S10) INSTALL BLUE REFLECTIVE FIRE HYDRANT PAVEMENT MARKER PER FIGURE 38-102(CA) PER CAL. MUTCD.
- (S11) INSTALL NEW SIGN & POST AS NOTED.
- (S12) INSTALL 12" YELLOW THERMOPLASTIC LADDER CROSSWALK PER CALTRANS STD. PLAN A24F.
- (S13) INSTALL WHITE THERMOPLASTIC RAILROAD CROSSING SYMBOL PER CALTRANS STD. PLAN A24B.
- (S14) INSTALL 12" WHITE THERMOPLASTIC BASIC CROSSWALK PER CALTRANS STD. PLAN A24F.
- (S15) INSTALL 12" YELLOW THERMOPLASTIC BASIC CROSSWALK PER CALTRANS STD. PLAN A24F.
- (S16) INSTALL 24" WHITE THERMOPLASTIC LIMIT LINE PER CALTRANS STD. PLAN A24E.

811 Know what's Call before you dig.

BASIS OF BEARING.
THE BEARINGS AND COORDINATES HEREON ARE BASED ON THE CALIFORNIA COORDINATE SYSTEM OF 1983 (NAD83), ZONE 5 DATUM, BASED LOCALLY ON A LINE BETWEEN NGS CONTROL POINTS EV3794 AND EV3841, BEING N84°35'29"W, 1991.35 EPOCH.

BENCHMARK.
LOS ANGELES COUNTY PUBLIC WORKS BENCH MARK NO. 1G4120.
DESCRIPTION: (SBM MON IN S. END C.B. 5FT N/O BCR @ NE COR. SAN GABRIEL BLVD & HUNTINGTON DR MKD (BM 10-5A 1966).
ELEVATION = 601.950

Δ	DATE	DESCRIPTION	APP'D	DATE

REVISIONS

CITY OF SOUTH PASADENA

APPROVED BY: _____ DATE

REGISTERED PROFESSIONAL ENGINEER — KURT R. PEDERSEN — NO. 69745 — CIVIL — STATE OF CALIFORNIA

RKA CONSULTING GROUP
398 S. LEMON CREEK DRIVE-SUITE E-WALNUT-CA-91789
(909) 594-9702-FAX (909) 594-2658
WWW.RKAGROUP.COM

5-13-25
KURT R. PEDERSEN RCE 69745 DATE

CITY OF SOUTH PASADENA

FY2019-20 STREET & WATER IMP.

STRIPING PLAN
PINE STREET

STREET & WATER IMPROVEMENT PROJECT

SHEET 29 OF 33 SHEETS

DESIGNED BY:
DRAWN BY:
REVIEWED BY: KRP
JOB NO.: 323007
DRAWING NAME: V:\CAD\323007\DWG\LSTR29.DWG
PLAN SET: FY19-20 STREET IMPROVEMENT PROJECT
LATEST MYLAR REVISION DATE: X
DRAWING LAST UPDATED: 2024-10-17
MYLAR PLOT DATE: X

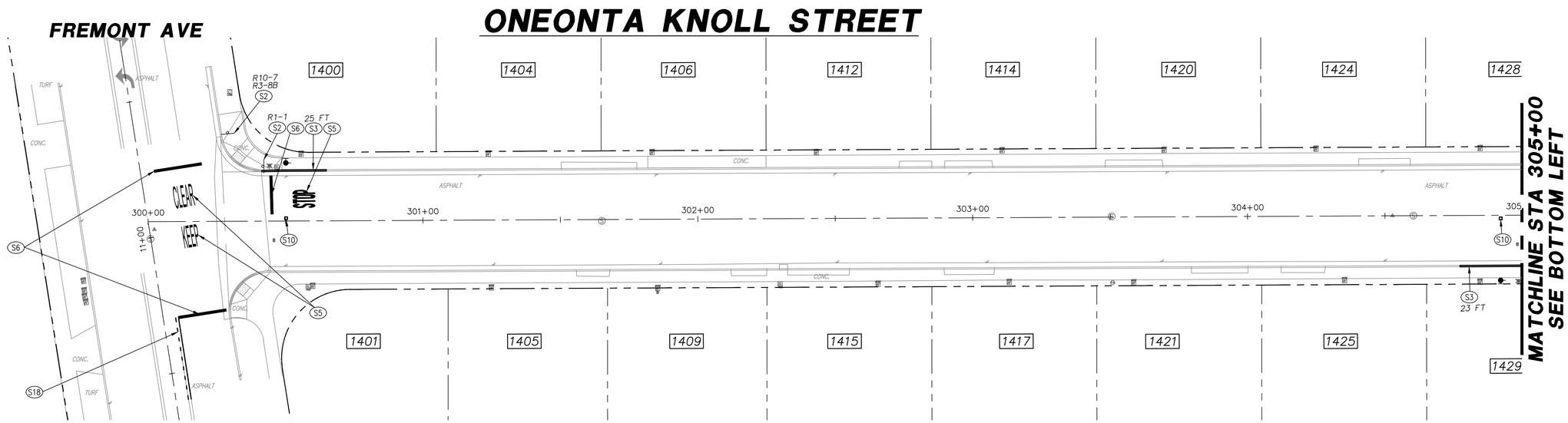

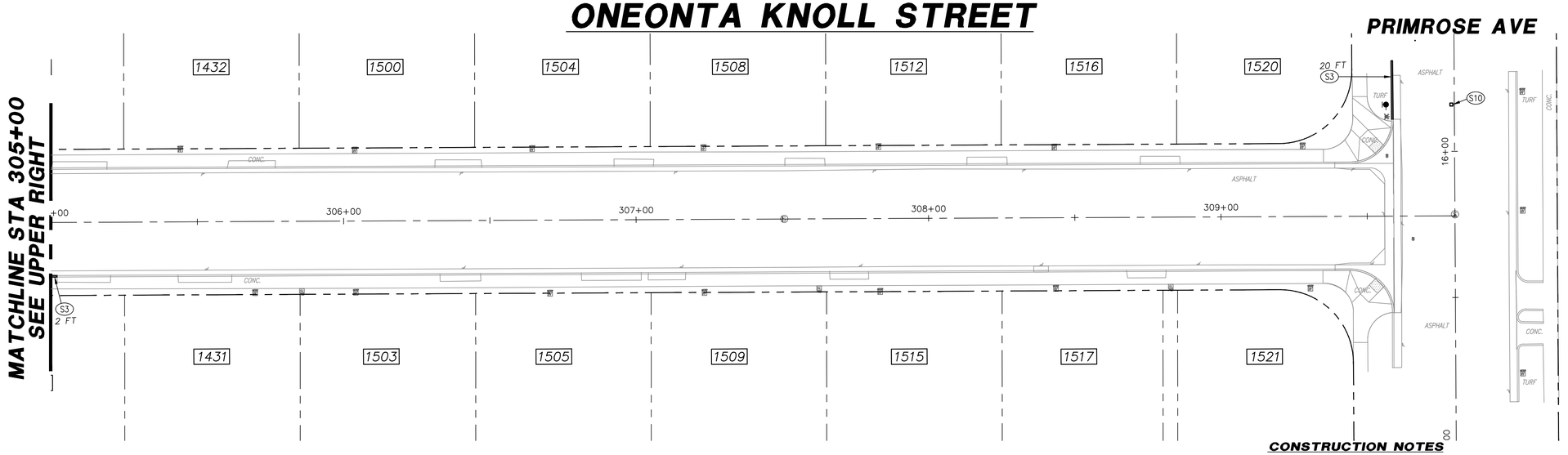

GENERAL STRIPING NOTES

1. SIGNING AND STRIPING SHALL BE ACCORDING TO THE CALIFORNIA MANUAL ON UNIFORM TRAFFIC CONTROL DEVICES (CAMUTCD), LATEST EDITION.
2. ALL CONFLICTING SIGNING AND STRIPING SHALL BE REMOVED. LINES AND PAVEMENT MARKINGS SHALL BE REMOVED BY WET SANDBLASTING. PAVEMENT DAMAGED DUE TO REMOVING RAISED PAVEMENT MARKERS SHALL BE REPAIRED TO THE SATISFACTION OF THE CITY ENGINEER. ALL RAISED PAVEMENT MARKERS SHALL BE CERAMIC TYPE.
3. ALL ARROWS AND PAVEMENT MARKINGS SHALL BE THERMOPLASTIC UNLESS OTHERWISE INDICATED.
4. LANE WIDTHS SHALL BE MEASURED BETWEEN THE CENTER LINES OF EACH ADJACENT SINGLE OR DOUBLE STRIPE OR FACE OF CURB AS APPROPIATE.
5. PROPOSED LANE LINES SHALL MATCH EXISTING LANE LINES UNLESS OTHERWISE INDICATED.
6. ALL CAT-TRACK LAYOUTS MUST BE INSPECTED BY THE ENGINEER IN THE FIELD BEFORE STRIPING BEGINS, CONTACT PUBLIC WORKS INSPECTOR 24 HOURS BEFORE CAT-TRACKING TO SCHEDULE INSPECTION.
7. REFLECTIVE BLUE PAVEMENT MARKERS SHALL BE INSTALLED AT EACH FIRE HYDRANT.
8. ALL NECESSARY STRIPING SHALL BE LOCATED PRIOR TO POSITIONING NEW DETECTOR LOOPS. LOOP LAYOUTS SHALL BE INSPECTED AND APPROVED PRIOR TO INSTALLATION.
9. CONTRACTOR SHALL REPAINT ALL EXISTING RED CURB LOCATIONS WITHIN THE PROJECT LIMITS.
10. ALL STRIPING SHALL BE 4" WIDE UNLESS OTHERWISE NOTED.

NOTE:
HORIZONTAL AND VERTICAL LOCATIONS TO BE VERIFIED IN THE FIELD AND ENGINEER NOTIFIED OF ANY DISCREPANCIES PRIOR TO CONSTRUCTION.

SIGNS LEGEND

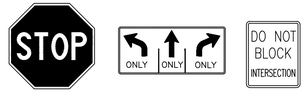

R1-1 R3-8B R10-7

RKA NORTH

20' 10' 0' 20' 40'

GRAPHIC SCALE: 1"=20'

CONSTRUCTION NOTES

- (S1) REMOVE EXIST. SIGN & POST.
- (S2) REMOVE EXIST. TRAFFIC SIGN & POST AND INSTALL NEW SIGN & POST AS NOTED.
- (S3) SAND BLAST EXIST. RED CURB & REPAINT WITH 2 COATS OF RED PAINT.
- (S4) REMOVE EXIST. SIGN & INSTALL NEW TRAFFIC SIGN ON EXIST. STREET LIGHT POLE AS SHOWN.
- (S5) INSTALL WHITE PAVEMENT LEGEND AS SHOWN AND PER CALTRANS STD. PLANS.
- (S6) INSTALL 12" WHITE LIMIT LINE PER CALTRANS STD. PLAN A24E.
- (S7) INSTALL STREET NAME SIGN ON NEW POST PER CITY OF SOUTH PASADENA STDS.
- (S8) INSTALL 4" YELLOW NO PASSING ZONE PER CALTRANS STD. PLAN A20A, DETAIL 21.
- (S9) INSTALL 4" YELLOW CENTERLINE PER CALTRANS STD. PLAN A20A, DETAIL 2.
- (S10) INSTALL BLUE REFLECTIVE FIRE HYDRANT PAVEMENT MARKER PER FIGURE 3B-102(CA) PER CAL. MUTCD.
- (S11) INSTALL NEW SIGN & POST AS NOTED.
- (S12) INSTALL 12" YELLOW THERMOPLASTIC LADDER CROSSWALK PER CALTRANS STD. PLAN A24F.
- (S13) INSTALL WHITE THERMOPLASTIC RAILROAD CROSSING SYMBOL PER CALTRANS STD. PLAN A24B.
- (S14) INSTALL 12" WHITE THERMOPLASTIC BASIC CROSSWALK PER CALTRANS STD. PLAN A24F.
- (S15) INSTALL 12" YELLOW THERMOPLASTIC BASIC CROSSWALK PER CALTRANS STD. PLAN A24F.
- (S16) INSTALL 24" WHITE THERMOPLASTIC LIMIT LINE PER CALTRANS STD. PLAN A24E.
- (S17) INSTALL YELLOW PAVEMENT LEGEND AS SHOWN PER CALTRANS STD. PLANS.
- (S18) INSTALL 4" YELLOW TWO-WAY LEFT TURN LANES PER CALTRANS STD. PLAN A20B, DETAIL 32.

811 Know what's below. Call before you dig.

BASIS OF BEARING.
THE BEARINGS AND COORDINATES HEREON ARE BASED ON THE CALIFORNIA COORDINATE SYSTEM OF 1983 (NAD83), ZONE 5 DATUM, BASED LOCALLY ON A LINE BETWEEN NGS CONTROL POINTS EV3794 AND EV3841, BEING N84°35'29"W, 1991.35 EPOCH.

BENCHMARK.
LOS ANGELES COUNTY PUBLIC WORKS BENCH MARK NO. 1G4120.
DESCRIPTION: (SBM MON IN S. END C.B. 5FT N/O BCR @ NE COR. SAN GABRIEL BLVD & HUNTINGTON DR MKD (BM 10-5A 1966).
ELEVATION = 601.950

Δ	DATE	DESCRIPTION	APP'D	DATE

REVISIONS

CITY OF SOUTH PASADENA

APPROVED BY: _____ DATE

REGISTERED PROFESSIONAL ENGINEER — KURT R. PEDERSEN — NO. 69745 — CIVIL — STATE OF CALIFORNIA

RKA CONSULTING GROUP
398 S. LEMON CREEK DRIVE - SUITE E-WALNUT-CA-91789
(909) 594-9702-FAX (909) 594-2658
WWW.RKAGROUP.COM

5-13-25
KURT R. PEDERSEN RCE 69745 DATE

CITY OF SOUTH PASADENA

FY2019-20 STREET & WATER IMP.

STRIPING PLAN
ONEONTA KNOLL STREET

STREET & WATER IMPROVEMENT PROJECT

SHEET 30 OF 33 SHEETS

DESIGNED BY:
DRAWN BY:
REVIEWED BY: KRP
JOB NO.: 323007
DRAWING NAME: \ACAD\323007\DWG\STR29.DWG
PLAN SET: FY19-20 STREET IMPROVEMENT PROJECT
LATEST MYLAR REVISION DATE: X
DRAWING LAST UPDATED: 2024-10-17
MYLAR PLOT DATE: X

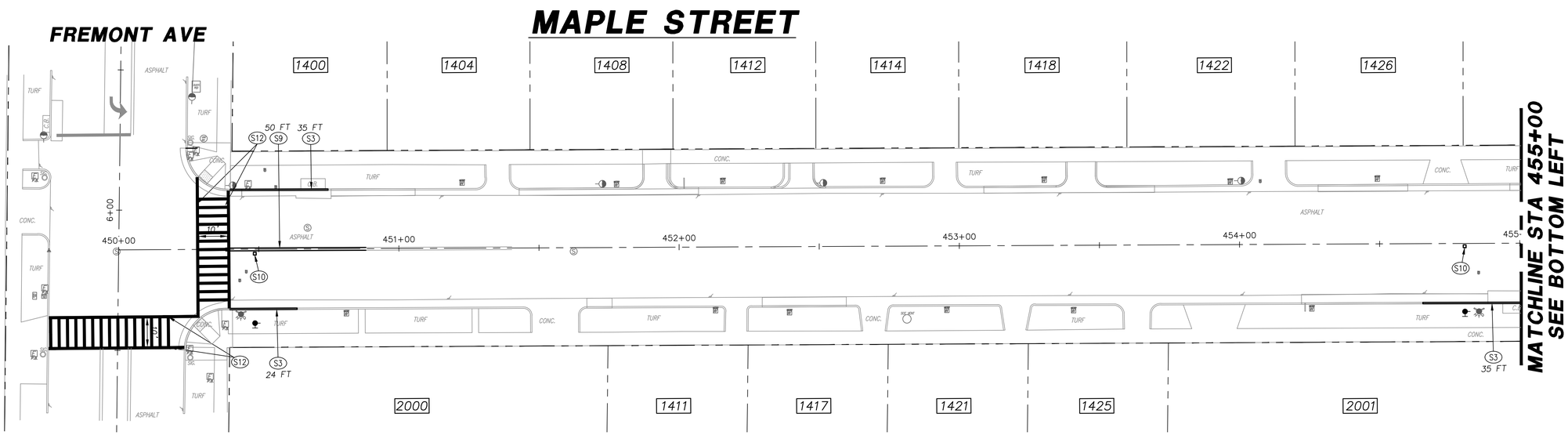

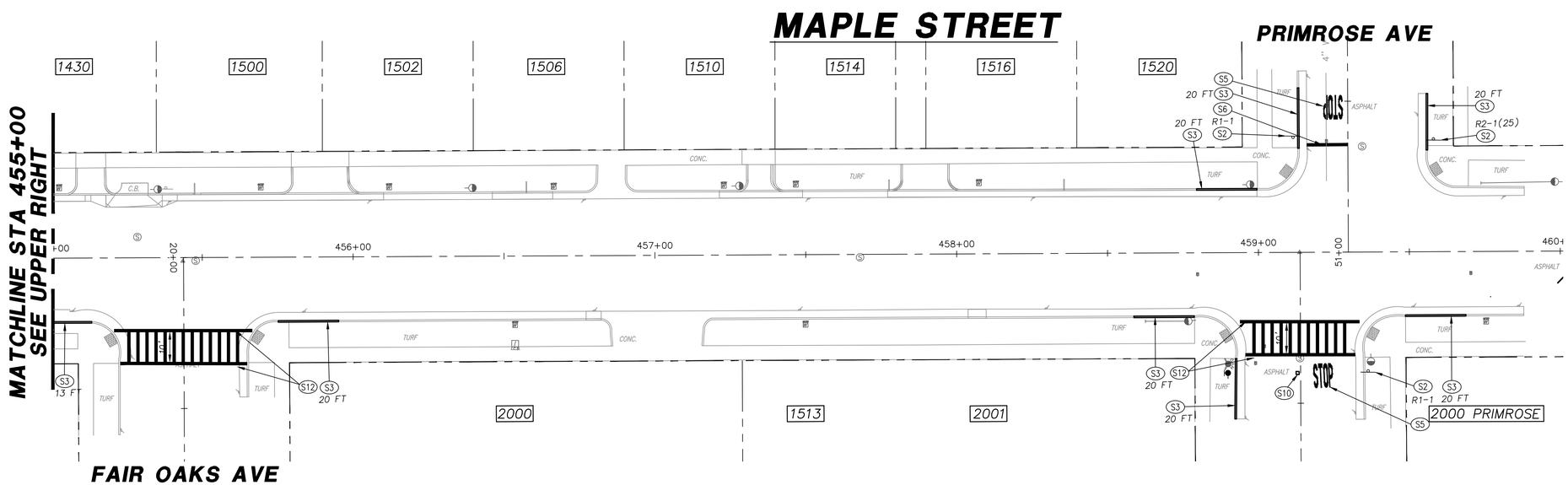

GENERAL STRIPING NOTES

1. SIGNING AND STRIPING SHALL BE ACCORDING TO THE CALIFORNIA MANUAL ON UNIFORM TRAFFIC CONTROL DEVICES (CAMUTCD), LATEST EDITION.
2. ALL CONFLICTING SIGNING AND STRIPING SHALL BE REMOVED. LINES AND PAVEMENT MARKINGS SHALL BE REMOVED BY WET SANDBLASTING. PAVEMENT DAMAGED DUE TO REMOVING RAISED PAVEMENT MARKERS SHALL BE REPAIRED TO THE SATISFACTION OF THE CITY ENGINEER. ALL RAISED PAVEMENT MARKERS SHALL BE CERAMIC TYPE.
3. ALL ARROWS AND PAVEMENT MARKINGS SHALL BE THERMOPLASTIC UNLESS OTHERWISE INDICATED.
4. LANE WIDTHS SHALL BE MEASURED BETWEEN THE CENTER LINES OF EACH ADJACENT SINGLE OR DOUBLE STRIPE OR FACE OF CURB AS APPROPIATE.
5. PROPOSED LANE LINES SHALL MATCH EXISTING LANE LINES UNLESS OTHERWISE INDICATED.
6. ALL CAT-TRACK LAYOUTS MUST BE INSPECTED BY THE ENGINEER IN THE FIELD BEFORE STRIPING BEGINS, CONTACT PUBLIC WORKS INSPECTOR 24 HOURS BEFORE CAT-TRACKING TO SCHEDULE INSPECTION.
7. REFLECTIVE BLUE PAVEMENT MARKERS SHALL BE INSTALLED AT EACH FIRE HYDRANT.
8. ALL NECESSARY STRIPING SHALL BE LOCATED PRIOR TO POSITIONING NEW DETECTOR LOOPS. LOOP LAYOUTS SHALL BE INSPECTED AND APPROVED PRIOR TO INSTALLATION.
9. CONTRACTOR SHALL REPAINT ALL EXISTING RED CURB LOCATIONS WITHIN THE PROJECT LIMITS.
10. ALL STRIPING SHALL BE 4" WIDE UNLESS OTHERWISE NOTED.

NOTE:
HORIZONTAL AND VERTICAL LOCATIONS TO BE VERIFIED IN THE FIELD AND ENGINEER NOTIFIED OF ANY DISCREPANCIES PRIOR TO CONSTRUCTION.

SIGNS LEGEND



R1-1



R2-1(25)

RKA NORTH

20' 10' 0' 20'

GRAPHIC SCALE: 1"=20'

CONSTRUCTION NOTES

- (S1) REMOVE EXIST. SIGN & POST.
- (S2) REMOVE EXIST. TRAFFIC SIGN & POST AND INSTALL NEW SIGN & POST AS NOTED.
- (S3) SAND BLAST EXIST. RED CURB & REPAINT WITH 2 COATS OF RED PAINT.
- (S4) REMOVE EXIST. SIGN & INSTALL NEW TRAFFIC SIGN ON EXIST. STREET LIGHT POLE AS SHOWN.
- (S5) INSTALL WHITE PAVEMENT LEGEND AS SHOWN AND PER CALTRANS STD. PLANS.
- (S6) INSTALL 12" WHITE LIMIT LINE PER CALTRANS STD. PLAN A24E.
- (S7) INSTALL STREET NAME SIGN ON NEW POST PER CITY OF SOUTH PASADENA STDS.
- (S8) INSTALL 4" YELLOW NO PASSING ZONE PER CALTRANS STD. PLAN A20A, DETAIL 21.
- (S9) INSTALL 4" YELLOW CENTERLINE PER CALTRANS STD. PLAN A20A, DETAIL 2.
- (S10) INSTALL BLUE REFLECTIVE FIRE HYDRANT PAVEMENT MARKER PER FIGURE 38-102(CA) PER CAL. MUTCD.
- (S11) INSTALL NEW SIGN & POST AS NOTED.
- (S12) INSTALL 12" YELLOW THERMOPLASTIC LADDER CROSSWALK PER CALTRANS STD. PLAN A24F.
- (S13) INSTALL WHITE THERMOPLASTIC RAILROAD CROSSING SYMBOL PER CALTRANS STD. PLAN A24B.
- (S14) INSTALL 12" WHITE THERMOPLASTIC BASIC CROSSWALK PER CALTRANS STD. PLAN A24F.
- (S15) INSTALL 12" YELLOW THERMOPLASTIC BASIC CROSSWALK PER CALTRANS STD. PLAN A24F.
- (S16) INSTALL 24" WHITE THERMOPLASTIC LIMIT LINE PER CALTRANS STD. PLAN A24E.

811 Know what's Call before you dig. below.

BASIS OF BEARING:
THE BEARINGS AND COORDINATES HEREON ARE BASED ON THE CALIFORNIA COORDINATE SYSTEM OF 1983 (NAD83), ZONE 5 DATUM, BASED LOCALLY ON A LINE BETWEEN NGS CONTROL POINTS EV3794 AND EV3841, BEING N84°35'29"W, 1991.35 EPOCH.

BENCHMARK:
LOS ANGELES COUNTY PUBLIC WORKS BENCH MARK NO. 1G4120.
DESCRIPTION: (SBM MON IN S. END C.B. 5FT N/O BCR @ NE COR. SAN GABRIEL BLVD & HUNTINGTON DR MKD (BM 10-5A 1966).
ELEVATION = 601.950

Δ	DATE	DESCRIPTION	APP'D	DATE

REVISIONS

CITY OF SOUTH PASADENA

APPROVED BY: _____ DATE

REGISTERED PROFESSIONAL ENGINEER
KURT R. PEDERSEN
NO. 69745
CIVIL
STATE OF CALIFORNIA

RKA CONSULTING GROUP
398 S. LEMON CREEK DRIVE · SUITE E · WALNUT · CA · 91789
(909) 594-9702 · FAX (909) 594-2658
WWW.RKAGROUP.COM

5-13-25
KURT R. PEDERSEN RCE 69745 DATE

CITY OF SOUTH PASADENA

FY2019-20 STREET & WATER IMP.
STRIPING PLAN
MAPLE STREET
FROM FREEMONT AVE TO PRIMEROSE AVE

STREET & WATER IMPROVEMENT PROJECT

SHEET 31 OF 33 SHEETS

DESIGNED BY:
DRAWN BY:
REVIEWED BY: KRP
JOB NO: 323007
DRAWING NAME: V:\CAD\323007\DWG\LSTR30.DWG
PLAN SET: FY19-20 STREET IMPROVEMENT PROJECT
DRAWING LAST UPDATED: 2024-10-17
LATEST MYLAR REVISION DATE: X
MYLAR PLOT DATE: X

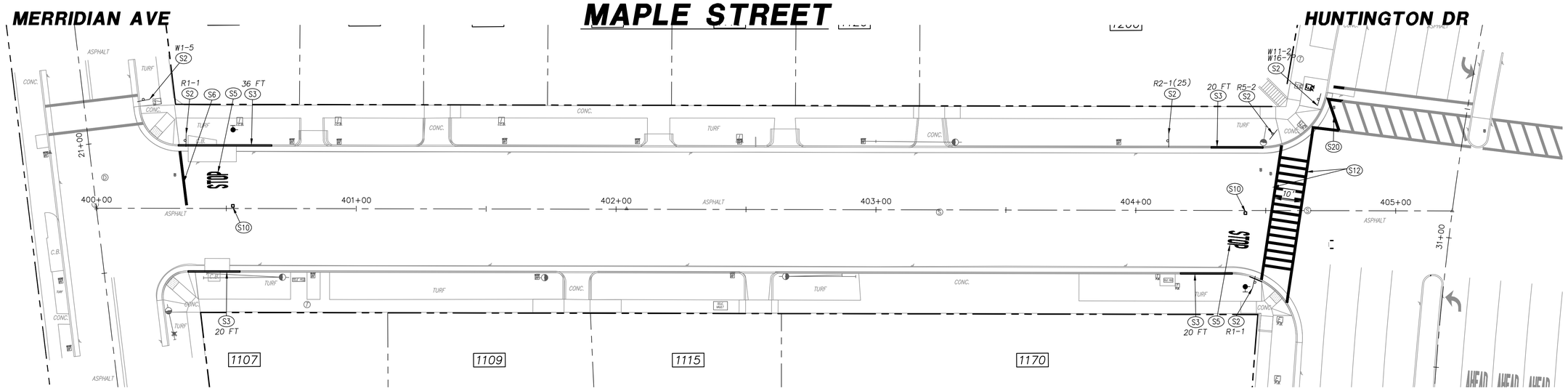

RKA NORTH

20' 10' 0' 20' 40'

GRAPHIC SCALE: 1"=20'

GENERAL STRIPING NOTES

1. SIGNING AND STRIPING SHALL BE ACCORDING TO THE CALIFORNIA MANUAL ON UNIFORM TRAFFIC CONTROL DEVICES (CAMUTCD), LATEST EDITION.
2. ALL CONFLICTING SIGNING AND STRIPING SHALL BE REMOVED. LINES AND PAVEMENT MARKINGS SHALL BE REMOVED BY WET SANDBLASTING. PAVEMENT DAMAGED DUE TO REMOVING RAISED PAVEMENT MARKERS SHALL BE REPAIRED TO THE SATISFACTION OF THE CITY ENGINEER. ALL RAISED PAVEMENT MARKERS SHALL BE CERAMIC TYPE.
3. ALL ARROWS AND PAVEMENT MARKINGS SHALL BE THERMOPLASTIC UNLESS OTHERWISE INDICATED.
4. LANE WIDTHS SHALL BE MEASURED BETWEEN THE CENTER LINES OF EACH ADJACENT SINGLE OR DOUBLE STRIPE OR FACE OF CURB AS APPROPIATE.
5. PROPOSED LANE LINES SHALL MATCH EXISTING LANE LINES UNLESS OTHERWISE INDICATED.
6. ALL CAT-TRACK LAYOUTS MUST BE INSPECTED BY THE ENGINEER IN THE FIELD BEFORE STRIPING BEGINS, CONTACT PUBLIC WORKS INSPECTOR 24 HOURS BEFORE CAT-TRACKING TO SCHEDULE INSPECTION.
7. REFLECTIVE BLUE PAVEMENT MARKERS SHALL BE INSTALLED AT EACH FIRE HYDRANT.
8. ALL NECESSARY STRIPING SHALL BE LOCATED PRIOR TO POSITIONING NEW DETECTOR LOOPS. LOOP LAYOUTS SHALL BE INSPECTED AND APPROVED PRIOR TO INSTALLATION.
9. CONTRACTOR SHALL REPAINT ALL EXISTING RED CURB LOCATIONS WITHIN THE PROJECT LIMITS.
10. ALL STRIPING SHALL BE 4" WIDE UNLESS OTHERWISE NOTED.

NOTE:
HORIZONTAL AND VERTICAL LOCATIONS TO BE VERIFIED IN THE FIELD AND ENGINEER NOTIFIED OF ANY DISCREPANCIES PRIOR TO CONSTRUCTION.

SIGNS LEGEND



R1-1 | R2-1(25) | MODIFIED SIGN R5-2 | W1-5 | W11-2 | W16-7P

CONSTRUCTION NOTES

- (S1) REMOVE EXIST. SIGN & POST.
- (S2) REMOVE EXIST. TRAFFIC SIGN & POST AND INSTALL NEW SIGN & POST AS NOTED.
- (S3) SAND BLAST EXIST. RED CURB & REPAINT WITH 2 COATS OF RED PAINT.
- (S4) REMOVE EXIST. SIGN & INSTALL NEW TRAFFIC SIGN ON EXIST. STREET LIGHT POLE AS SHOWN.
- (S5) INSTALL WHITE PAVEMENT LEGEND AS SHOWN AND PER CALTRANS STD. PLANS.
- (S6) INSTALL 12" WHITE LIMIT LINE PER CALTRANS STD. PLAN A24E.
- (S7) INSTALL STREET NAME SIGN ON NEW POST PER CITY OF SOUTH PASADENA STDS.
- (S8) INSTALL 4" YELLOW NO PASSING ZONE PER CALTRANS STD. PLAN A20A, DETAIL 21.
- (S9) INSTALL 4" YELLOW CENTERLINE PER CALTRANS STD. PLAN A20A, DETAIL 2.
- (S10) INSTALL BLUE REFLECTIVE FIRE HYDRANT PAVEMENT MARKER PER FIGURE 38-102(CA) PER CAL. MUTCD.
- (S11) INSTALL NEW SIGN & POST AS NOTED.
- (S12) INSTALL 12" YELLOW THERMOPLASTIC LADDER CROSSWALK PER CALTRANS STD. PLAN A24F.
- (S13) INSTALL WHITE THERMOPLASTIC RAILROAD CROSSING SYMBOL PER CALTRANS STD. PLAN A24B.
- (S14) INSTALL 12" WHITE THERMOPLASTIC BASIC CROSSWALK PER CALTRANS STD. PLAN A24F.
- (S15) INSTALL 12" YELLOW THERMOPLASTIC BASIC CROSSWALK PER CALTRANS STD. PLAN A24F.
- (S16) INSTALL 24" WHITE THERMOPLASTIC LIMIT LINE PER CALTRANS STD. PLAN A24E.
- (S20) INSTALL 12" WHITE THERMOPLASTIC LADDER CROSSWALK PER CALTRANS STD. PLAN A24F.

811 Know what's Call before you dig.

BASIS OF BEARING:
THE BEARINGS AND COORDINATES HEREON ARE BASED ON THE CALIFORNIA COORDINATE SYSTEM OF 1983 (NAD83), ZONE 5 DATUM, BASED LOCALLY ON A LINE BETWEEN NGS CONTROL POINTS EV3794 AND EV3841, BEING N84°35'29"W, 1991.35 EPOCH.

BENCHMARK:
LOS ANGELES COUNTY PUBLIC WORKS BENCH MARK NO. 1G4120.
DESCRIPTION: (SBM MON IN S. END C.B. 5FT N/O BCR @ NE COR. SAN GABRIEL BLVD & HUNTINGTON DR MKD (BM 10-5A 1966).
ELEVATION = 601.950

Δ	DATE	DESCRIPTION	APP'D	DATE

REVISIONS

CITY OF SOUTH PASADENA

APPROVED BY: _____ DATE

REGISTERED PROFESSIONAL ENGINEER · KURT R. PEDERSEN · NO. 69745 · CIVIL · STATE OF CALIFORNIA

RKA CONSULTING GROUP
398 S. LEMON CREEK DRIVE · SUITE E · WALNUT · CA · 91789
(909) 594-9702 · FAX (909) 594-2658
WWW.RKAGROUP.COM

5-13-25
KURT R. PEDERSEN RCE 69745 DATE

CITY OF SOUTH PASADENA

FY2019-20 STREET & WATER IMP.
STRIPING PLAN
MAPLE STREET
FROM MERRIDIAN AVE TO HUNTINGTON DR
STREET & WATER IMPROVEMENT PROJECT

SHEET 32 OF 33 SHEETS

DRAWING LAST UPDATED: 2024-10-17
ULTIMATE PLOT DATE: X

DESIGNED BY:
DRAWN BY:
REVIEWED BY: KRP
JOB NO: 323007
DRAWING NAME: \ACAD\323007\DWG\LSTR31.DWG
PLAN SET: FY19-20 STREET IMPROVEMENT PROJECT
LATEST MAJOR REVISION DATE: X

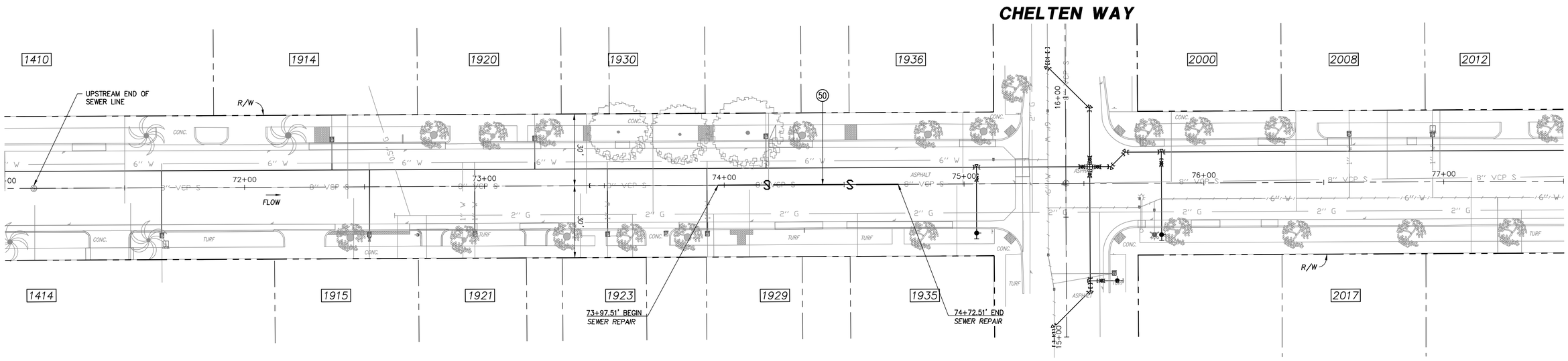

CONSTRUCTION NOTES

(50) REMOVE AND REPLACE 8" VCP SEWER

NOTE:
HORIZONTAL AND VERTICAL LOCATIONS TO BE VERIFIED IN THE FIELD AND ENGINEER NOTIFIED OF ANY DISCREPANCIES PRIOR TO CONSTRUCTION.

RKA NORTH

20' 10' 0' 20' 40'

GRAPHIC SCALE: 1"=20'

811 Know what's below. Call before you dig.

BASIS OF BEARING:
THE BEARINGS AND COORDINATES HEREON ARE BASED ON THE CALIFORNIA COORDINATE SYSTEM OF 1983 (NAD83), ZONE 5 DATUM, BASED LOCALLY ON A LINE BETWEEN NGS CONTROL POINTS EV3794 AND EV3841, BEING N84°35'29"W, 1991.35 EPOCH.

BENCHMARK:
LOS ANGELES COUNTY PUBLIC WORKS BENCH MARK NO. 1G4120.
DESCRIPTION: (SBM MON IN S. END C.B. 5FT N/O BCR @ NE COR. SAN GABRIEL BLVD & HUNTINGTON DR MKD (BM 10-5A 1966).
ELEVATION = 601.950

Δ	DATE	DESCRIPTION	APP'D	DATE

REVISIONS

CITY OF SOUTH PASADENA

APPROVED BY: _____ DATE

REGISTERED PROFESSIONAL ENGINEER · KURT R. PEDERSEN · NO. 69745 · CIVIL · STATE OF CALIFORNIA

RKA CONSULTING GROUP
398 S. LEMON CREEK DRIVE · SUITE E · WALNUT · CA · 91789
(909) 594-9702 · FAX (909) 594-2658
WWW.RKAGROUP.COM

KURT R. PEDERSEN RCE 69745 5-13-25 DATE

CITY OF SOUTH PASADENA

FY2019-20 STREET & WATER IMP.

SEWER IMPROVEMENT
EDGEWOOD DRIVE

STREET & WATER IMPROVEMENT PROJECT

SHEET 33 OF 33 SHEETS

REVIEWED BY: KRP
DRAWN BY:
DESIGNED BY:
DRAWING NAME: \ACAD\323007\DWG\LSTR17.DWG
JOB NO: 323007
PLAN SET: FY19-20 STREET IMPROVEMENT PROJECT
LATEST MYLAR REVISION DATE: X
DRAWING LAST UPDATED: 2024-10-17
MYLAR PLOT DATE: X

Public Works Project Bid Packet

FY 19-20 STREET IMPROVEMENT PROJECT
PROJECT NO. 2020-01 (002001)

CITY OF SOUTH PASADENA
Public Works Department

Purpose: Construction, repair, improvements etc. of public buildings or property

Value: Over $200,000

Bidding: Formal Bid Process in accordance with South Pasadena Municipal Code (SPMC) Chapter 2 Administration, Article XIII Awarding Public Works Contracts and the Uniform Public Construction Cost Accounting Act (Public Contract Code Section 22000 et seq.)

Required Documents Checklist:

- □ Notice Inviting Sealed Bids
- □ Instruction to Bidders
- □ Proposal Information and Documents
- □ Contract Information and Documents
- □ Standard Specifications
- □ Special Provisions
- □ Appendices

Mandatory Forms Checklist:

- □ Bid Proposal
- □ Bid Schedule (Bid costs submitted through PlanetBids)
- □ Bid Bond & Certificate of Acknowledgment or Bid Guarantee
- □ Bidder Information
- □ Experience Statement
- □ Designation of Suppliers and Subcontractors
- □ Statement Regarding Insurance Coverage
- □ Statement Regarding Contractor's Licensing Laws
- □ Non-Collusion Affidavit

Documents Required Upon Award:

- □ Contract Agreement & Certificate of Acknowledgment
- □ Payment Bond & Certificate of Acknowledgment
- □ Faithful Performance Bond & Certificate of Acknowledgment
- □ Maintenance Bond & Certificate of Acknowledgment
- □ Worker's Compensation Insurance Certificate
- □ Endorsements to Insurance Policy

Approved for use on June 7, 2023
294856.v3

NOTICE INVITING BIDS AND CONTRACT DOCUMENTS

for

FY 19-20 STREET IMPROVEMENT PROJECT
SPECIFICATION NO. 2020-01 (002001)
IN THE CITY OF SOUTH PASADENA, CALIFORNIA

Prepared by:
RKA Consulting Group
398 Lemon Creek Drive, Suite E
Walnut, CA 91789

(909) 594-9702

Approved by:
City of South Pasadena
Public Works Department
1414 Mission Street
South Pasadena, CA 91030
(626) 403-7240

TABLE OF CONTENTS

FY 19-20 STREET IMPROVEMENT PROJECT
PROJECT SPECIFICATION NO. 2020-01 (002001)
IN THE CITY OF SOUTH PASADENA, CALIFORNIA

TABLE OF CONTENTS:

SECTION A – **NOTICE INVITING SEALED BIDS** 1
SECTION B – **INSTRUCTIONS TO BIDDERS** 5
SECTION C – **PROPOSAL INFORMATION AND DOCUMENTS** 12
SECTION D – **CONTRACT INFORMATION AND DOCUMENTS** 30
SECTION E – **STANDARD SPECIFICATIONS** 55
SECTION F – **SPECIAL PROVISIONS** 56
APPENDIX I – Technical Provisions for FY 19-20 Street Improvement Project
APPENDIX II – Geotechnical Report
APPENDIX III – Los Angeles County Waterworks Districts Standards
APPENDIX IV – Standard Plans for Public Works Construction (SPPWC) Standard
APPENDIX V - Metro Construction Management and Safety Coordination
APPENDIX VI - Metro Construction Work Plan Utility Template
APPENDIX VII - Metro Rail Safety Training Map
APPENDIX VIII - Metro Track Allocation Quick-Reference Sheet

SECTION A – NOTICE INVITING SEALED BIDS

FY 19-20 STREET IMPROVEMENT PROJECT
PROJECT SPECIFICATION NO. 2020-01 (002001)

IN THE CITY OF SOUTH PASADENA, CALIFORNIA

CALENDAR OF EVENTS*

Bid Advertisement	23rd day of May, 2025
Bid Package available starting	19th day of May, 2025
Pre-Bid Meeting & Site Visit Walk Through	28th day of May, 2025 at 8:30 a.m.
Questions Regarding the Proposal Due	2nd day of June, 2025 at 5:00 p.m.
Addendum Posted on City's Planet Bids system	4th day of June, 2025 at 5:00 p.m.
Bid Due Date and Time	9th day of June, 2025 at 4:00 p.m.
Bid Opening	9th day of June, 2025 at 5:00 p.m.
Bid Results/Contractor Selection	12th day of June, 2025
Council approval of Contract	18th day of June, 2025
New Contract in Effect	19th day of June, 2025
Construction Start Date, not earlier than	7th day of July, 2025
Construction End Date, not later than	26th day of June, 2026

*All dates are subject to change.

NOTICE INVITING SEALED BIDS

FY 19-20 STREET IMPROVEMENT PROJECT
PROJECT SPECIFICATION NO. 2020-01 (002001)
IN THE CITY OF SOUTH PASADENA, CALIFORNIA

PUBLIC NOTICE IS HEREBY GIVEN that the City of South Pasadena as AGENCY, invites sealed bids for the above stated project and will receive such bids through the City's online bid management system ("PlanetBids"), up to the hour of 4:00 p.m., on Monday the 9th day of June, 2025. The date and time shall be extended by no less than 72 hours if the officer, department, or Project Manager issues any material changes, additions, or deletions to the invitation later than 72 hours prior to the bid closing. Any bids received after the time specified above or any extension due to material changes shall not be considered.

Project Name: *FY 19-20 Street Improvement Project No. 2020-01 (002001)*

City PlanetBids Project Bid Opportunities: https://vendors.planetbids.com/portal/44654/bo/bo-search

Project Description: The work consists of furnishing all materials, equipment, tools, labor, and incidentals required to complete the improvements shown on the Specifications and Contract Documents. The work performed under this contract is summarized in the Notice Inviting Sealed Bids and includes, but is not limited to each bid item listed in the Contractor's Bid Proposal, as covered in the Standard Specifications, and as described in the corresponding items on the following pages. The work in general, to be performed pursuant to these specifications, consists of pavement rehabilitation and replacement of mains, valves, water services, meters, and other appurtenances. The project also includes repair of damaged PCC curb and gutter, sidewalks, and driveways at various locations within the project limits, sawcut, removal and disposal of existing asphalt roadway sections, removal of macadam and subgrade, cold milling of existing pavement, subgrade preparation and compaction, crushed miscellaneous base (CMB), asphalt concrete pavement, removal and reconstruction of damaged PCC curb and gutter, sidewalk, driveway approaches, and ADA curb ramps, utility adjustments, installation of new water meters, services, valves, and appurtenances, sewer line repairs, traffic signing, thermoplastic striping and pavement markings; traffic control and all appurtenant work thereto necessary for the proper construction of the contemplated improvements, in accordance to Plans and Specification entitled as FY 19-20 Road Street Improvement Project No. 2020-01 (002001).

Engineer's Estimate: $7,200,000

Bids must be submitted on the City's Bid Forms. A bidder may obtain a copies of the plans, specifications, and contract documents from PlanetBids. To the extent required by section 20103.7 of the Public Contract Code, upon request from a contractor plan room service, the City shall provide an electronic copy of the contract documents at no charge to the contractor plan room. Please Note: Prospective bidders who choose to review the contract documents at a plan room must also register with the City through PlanetBids to obtain the required contract documents if they decide to submit a bid for the Project.

It is the responsibility of each prospective bidder to download and print all contract documents for review and to verify the completeness of contract documents before submitting a bid. Any addenda will be posted on PlanetBids. It is the responsibility of each prospective bidder to check PlanetBids on a daily basis through the close of bids for any applicable addenda or updates. The City does not assume any liability or responsibility based on any defective or incomplete copying, excerpting, scanning, faxing, downloading or printing of the contract documents. Information on PlanetBids may change without notice to prospective bidders. The contract documents shall supersede any information posted or transmitted by PlanetBids.

In accordance with the provisions of California Public Contract Code § 3300, and Business and Professions Code § 7028.15(e), the AGENCY has determined that the contractor shall possess a valid Class A contractor's license at the time that the contract is awarded. Failure to possess the specified license shall render a bidder's bid as non-responsive and shall bar award of the contract to any bidder not possessing the specified license at the time of the award.

CONTRACTORS ARE REQUIRED BY LAW TO BE LICENSED AND REGULATED BY THE CONTRACTORS' STATE LICENSE BOARD. ANY QUESTIONS CONCERNING A CONTRACTOR MAY BE REFERRED TO THE REGISTRAR, CONTRACTORS' STATE LICENSE BOARD, P.O. BOX 2600, SACRAMENTO, CA 95826. At the time the contract is awarded, the contractor shall be properly licensed in accordance with the laws of this state. The first payment for work or material shall not be made unless and until the Registrar of Contractors verifies to the AGENCY that the records of the Contractors' State License Board indicate that the contractor was properly licensed at the time the contract was awarded. Any bidder or contractor not so licensed shall be subject to all legal penalties imposed by law including, but not limited to, any appropriate disciplinary action by the Contractors' State Board. Failure of the bidder to obtain proper and adequate licensing for an award of a contract shall constitute a failure to execute the contract and shall result in the forfeiture of the security of the bidder. (Public Contract Code § 20103.5)

CONTRACTORS AND SUBCONTRACTORS ARE ALSO REQUIRED TO BE REGISTERED WITH THE CALIFORNIA DEPARTMENT OF INDUSTRIAL RELATIONS FOR ANY BID PROPOSAL SUBMITTED ON OR AFTER MARCH 1, 2015, AND FOR ANY CONTRACT FOR PUBLIC WORK ENTERED INTO ON OR AFTER APRIL 1, 2015. A contractor or subcontractor shall not be qualified to bid on, be listed on a bid proposal for, or perform any public work contract unless it is currently registered with the California Department of Industrial Relations as described in Labor Code § 1725.5.

Bids must be prepared on the approved bid forms in conformance with INSTRUCTIONS TO BIDDERS and submitted through PlanetBids.

The bid must be accompanied by a bid guarantee in the amount of 10% of the total bid by THE TIME AND DATE ADVERTISED FOR THE OPENING OF BIDS. More specifically, pursuant to Public Contract Code §§ 20170 and 20171, all bids for the project shall be presented, under sealed cover and shall be accompanied by one of the following forms of bidder's security in the amount of ten percent (10%) of the bid: (a) cash; (b) a cashier's check made payable to the City of South Pasadena; (c) a certified check made payable to the City of South Pasadena; or (d) a bidder's bond executed by an admitted surety insurer, made payable to the City of South Pasadena. Such security shall be forfeited should the successful bidder to whom the contract is awarded fails to timely execute the contract and to deliver the necessary bonds and insurance certificates as specified in the contract documents. The bid guarantee must be submitted in hard copy directly to the City prior to the specified date and time for bid opening as set forth in the Instructions to Bidders.

To the extent applicable, at any time during the term of the Agreement for the proposed project, the successful bidder may, at its own expense, substitute securities equivalent to the amount withheld as retention (or the retained percentage) in accordance with Public Contract Code § 22300.

Pursuant to California Civil Code § 9550, a payment bond is required to be submitted for all projects estimated in excess of $25,000.00.

The AGENCY has determined that the proposed project is a public works project subject to the provisions of Labor Code § 1720 thereby requiring the Contractor to pay the prevailing wage rates for all work performed under the Contract. Accordingly, the proposed project is subject to compliance monitoring and enforcement by the California Department of Industrial Relations.

The AGENCY reserves the right to reject any and all bids and to waive any minor irregularities in the proposal documents.

All questions should be submitted via PlanetBids. City staff will not respond to questions made via phone or email.

CITY OF SOUTH PASADENA

Date: May 15, 2025 By: H. Ted Gerber

H. Ted Gerber
Public Works Director

SECTION B – INSTRUCTIONS TO BIDDERS

FY 19-20 STREET IMPROVEMENT PROJECT
PROJECT SPECIFICATION NO. 2020-01 (002001)
IN THE CITY OF SOUTH PASADENA, CALIFORNIA

B1.01 INSPECTION OF SITE OF WORK

Bidders are required to inspect the site of the work in order to satisfy themselves, by personal examination or by such other means as they may prefer, of the location of the proposed work and as to the actual conditions of and at the site of work. If, during the course of his/her examination, a bidder finds facts or conditions which appear to him/her to conflict with the letter or spirit of the contract documents, or with any other data furnished him/her, he/she may apply to the AGENCY in writing in accordance with **B1.04 INTERPRETATION OF CONTRACT DOCUMENTS** for additional information and explanation before submitting his/her bid.

The submission of a proposal by the bidder shall constitute the acknowledgment that, if awarded the contract, he/she has relied and is relying on his/her own examination of (a) the site of the work, (b) the access to the site, and (c) all other data, matters, and things requisite to the fulfillment of the work and on his/her own knowledge of existing services and utilities on and in the vicinity of the site of the work to be constructed under the contract, and not on any representation or warranty of the AGENCY. No claim for additional compensation will be allowed which is based upon a lack of knowledge of these items.

B1.02 EXAMINATION OF CONTRACT DOCUMENTS

Each bidder shall thoroughly examine and be familiar with legal and procedural documents, general conditions, specifications, drawings and addenda (if any). The submission of a proposal shall constitute an acknowledgment upon which the AGENCY may rely that the bidder has thoroughly examined and is familiar with the contract documents. The bidders' attention is directed to the need, if any, for special invoicing for this project. The failure or neglect of a bidder to receive or examine any of the contract documents shall in no way relieve him/her from any obligations with respect to his/her proposal or to the contract. No claim for additional compensation will be allowed which is based upon a lack of knowledge of any contract document.

B1.03 CONTRACT PERIOD/CONSTRUCTION COMPLETION DATE

Bidder's attention is called to the provisions set forth in **SECTION E, STANDARD SPECIFICATIONS**, particularly those pertaining to the contract period and liquidated damages for avoidable delays.

The CONTRACTOR shall begin work within fifteen (15) calendar days after the date of the Notice to Proceed, and shall diligently prosecute said work to completion before the expiration **150 WORKING DAYS.** The CONTRACTOR shall pay to the AGENCY liquidated damages in accordance with Section 6-9 of the special Provisions (Section F) for each calendar day, or portion thereof, of delay in finishing the work in excess of the number of working days prescribed above.

B1.04 INTERPRETATION OF CONTRACT DOCUMENTS

No oral interpretations will be made to any bidder as to the meaning of the contract documents. Requests for an interpretation shall be made in writing and submitted to the AGENCY through PlanetBids at least five (5) working days before the time announced for opening the proposals. Interpretations by the AGENCY will be in the form of addenda to the contract documents and, when issued, will be posted on PlanetBids. It

is the responsibility of each prospective bidder to check PlanetBids on a daily basis through the close of bids for any applicable addenda or updates. All such addenda shall become part of the contract.

B1.05 SOIL INFORMATION

Geotechnical soil reports are included in an Appendix II.

B1.06 PROPOSAL

Proposals shall be made on the forms enclosed in **SECTION C** of these specifications. All proposals shall give the prices proposed, both in words and in numbers, shall give all other information requested herein, and shall be signed by the bidder or his/her authorized representative, with his/her address. If the proposal is made by an individual, his/her name, signature and mailing address must be shown; if made by firm or partnership, the name and mailing address of the firm or partnership and the signature of at least one of the general partners must be shown; if made by a corporation, the proposal shall show the name of the state under the laws of which the corporation is chartered, the name and mailing address of the corporation, and the name and title of the person who signs on behalf of the corporation. If the proposal is made by a corporation, a certified copy of the bylaws or resolution of the board of directors of the corporation shall be furnished demonstrating the authority of the officer signing the proposal to execute contracts on behalf of the corporation.

Each proposal shall be submitted through PlanetBids. Bidders are warned against making erasures or alterations of any kind, and proposals which contain omissions, erasures or irregularities of any kind may be rejected. No oral, telegraphic or telephonic proposals or modifications will be considered.

The Bid Schedule is available on PlanetBids through the "Line Items" tab. Bidders must insert and submit their Bid prices directly through PlanetBids by selecting "Place eBid" under the "Line Items" tab. The Bid Schedule will be incorporated into the Contract Documents. Failure to submit the Bid Schedule will render a bid nonresponsive. Bidders must provide pricing for every bid item. The costs of any Work shown or required in the Contract Documents, but not specifically identified as a Pay Item are to be included in related Pay Items and no additional compensation shall be due Contractor by virtue of Contractor's compliance with the Contract Documents. The estimated quantities for unit price items are for purposes of comparing bids only and City makes no representation that the actual quantities of Work performed will not vary from the estimates.

In conformance with the Business and Profession Code, § 7028.15, the CONTRACTOR must state clearly his/her license number and expiration date. In addition, he/she shall sign a statement that these representations were made under the penalty of perjury. This statement shall be made on the **EXPERIENCE STATEMENT** in **SECTION C**.

The CONTRACTOR will be required to pay prevailing wage pursuant to California Law, including California Labor Code §§ 1770 et seq. Copies of the prevailing rate of per diem wages are on file at the offices of the AGENCY.

The following Bid Forms shall be completed and signed by the Bidder and uploaded to PlanetBids as a single PDF file:

- Bidder Information
- Experience Statement
- Designation of Suppliers and Subcontractors
- Statement Regarding Insurance Coverage
- Statement Regarding Contractor's Licensing Laws

- Non-Collusion Affidavit

B1.07 ADDENDA

Each proposal shall include specific acknowledgment in the space provided on **SECTION C - BID PROPOSAL** of receipt of all addenda issued during the bidding period. Failure to so acknowledge may result in the proposal being rejected as not responsive.

Each prospective Bidder shall register with the City through PlanetBids. Addenda will be uploaded to PlanetBids. Please Note: Bidders are responsible for ensuring that they have received any and all Addenda. To this end, each Bidder should visit PlanetBids to verify that it has received all Addenda issued, if any, prior to the Bid opening.

B1.08 BID PRICES

Bid prices shall include everything necessary for the completion of construction and fulfillment of the contract including, but not limited to, furnishing all materials, equipment, tools, plant and other facilities and all management, superintendence, labor and services, except as may be provided otherwise in the contract documents. In the event of a difference between a price quoted in words and a price quoted in numbers for the same quotation, the words shall be the amount bid.

In preparing bid prices, bidder represents that he/she has carefully examined the Contract Documents and the site where the work is to be performed and that he/she has familiarized himself with all local conditions and federal, state and local laws, ordinances, rules, and regulations that may affect the performance of the work in any manner. The bidder further represents that he/she has studied all surveys and investigation reports about subsurface and physical conditions pertaining to the job site, that he/she has performed such additional surveys and investigations as he/she deems necessary to complete the work at his/her bid price, and that he/she has correlated the results of all such data with the requirements of the Contract Documents. The submittal of a bid shall be conclusive evidence that the bidder has investigated and is satisfied as to the conditions to be encountered, including locality, uncertainty of weather and all other contingencies, and as to the character, quality, quantities, and scope of the work.

The plans and specifications for the work show subsurface conditions or otherwise hidden conditions as the Design Engineer supposes or believes them to exist, but is not intended or to be inferred that the conditions as shown thereon constitute a representation that such conditions are actually existent. Except as otherwise specifically provided in the Contract Documents, the AGENCY, the Design Engineer and their consultants or agents shall not be liable for any loss sustained by the CONTRACTOR as a result of any variance of such conditions as shown on the plans and the actual conditions revealed during the progress of the work or otherwise.

The CONTRACTOR shall perform an independent take-off of the plans and bid accordingly. Quantities listed in the **BID SCHEDULE** in **SECTION C** are intended only as a guide for the CONTRACTOR as to the anticipated order of magnitude of work. CONTRACTOR shall be responsible for verifying all estimated quantities. CONTRACTOR will be reimbursed for the quantity of items actually installed as required by the Contract Documents and shown on the plans to neat line and grade.

The CONTRACTOR will not be reimbursed for unauthorized work performed outside of that required by the Contract Documents.

B1.09 TAXES

No mention shall be made in the proposal of sales tax, use tax, or any other tax, as all amounts bid will be deemed and held to include any such taxes which may be applicable.

B1.10 RECOGNITION OF BONDING COMPANIES

All bonding companies used by the CONTRACTOR in this contract must be recognized by the Federal Government within Circular 570. All proposals or contracts received that include bonds posted by bonding companies not recognized in Circular 570 will result in the disqualification of the bid proposal and forfeiture of the bid bond.

B1.11 QUALIFICATION OF BIDDERS

Each bidder shall be skilled and regularly engaged in the general class or type of work called for under the contract. A statement setting forth his/her experience shall be submitted by each bidder on the **EXPERIENCE STATEMENT** form provided in **SECTION C**.

Each bidder shall possess a valid CONTRACTOR's License issued by the CONTRACTOR's State License Board at the time his/her bid is submitted. The class of license shall be applicable to the work specified in the contract. Each bidder shall also have no less than five (5) years of experience in the magnitude and character of the work bid.

It is the intention of the AGENCY to award a contract to a bidder who furnished satisfactory evidence that he/she has the requisite experience and ability, and that he/she has sufficient capital, facilities, and plant to enable him/her to prosecute the work successfully and properly, and to complete it within the time stated in the contract.

To determine the degree of responsibility to be credited to the bidder, the AGENCY will weigh any evidence that the bidder has performed satisfactorily other contracts of like nature, magnitude and comparable difficulty and comparable rates of progress. If in the opinion of the AGENCY, a bidder is determined to be insufficiently qualified, then that bidder will not be considered for award of the contract.

B1.12 DESIGNATION OF SUPPLIERS AND SUBCONTRACTORS

Each proposal shall have listed on the **DESIGNATION OF SUPPLIERS AND SUBCONTRACTORS** form provided in **SECTION C** the name, California contractor license number, and Department of Industrial Relations registration number, and address of each subcontractor to whom the bidder proposes to sublet portions of the work in excess of one-half of one percent of the total amount of his/her bid. For the purpose of this paragraph, a subcontractor is defined as one who contracts with the CONTRACTOR to furnish materials and labor, or labor only for the performance of work at the site of the work or who will specially fabricate a portion of the work off the site pursuant to detailed drawings in the contract documents.

Public Contract Code § 4104 requires all bidders to list subcontractors and state the license number of all subcontractors who will perform work in excess of one-half of one percent of the total bid, or in the case of streets and highways, one-half of one percent of the total bid or $10,000, whichever is greater.

Public Contract Code § 6109 prohibits a CONTRACTOR from performing work with a subcontractor who is debarred pursuant to Labor Code §§ 1777.1 or 1777.7.

B1.13 PROPOSAL GUARANTEE

The proposal shall be accompanied by a proposal guarantee bond duly completed on the form provided herewith by a guarantee company authorized to carry on business in the State of California for payments to the AGENCY in the sum of at least 10% of the total amount of the bid proposal, or alternatively by a certified or cashier's check payable to the AGENCY, or cash, in the sum of at least 10% of the total amount of the bid proposal. The amount payable to the AGENCY under the proposal guarantee shall be forfeited to the AGENCY in case of failure or neglect of the bidder to furnish, execute and deliver to the AGENCY the required bonds, evidence of insurance and to enter into, execute and deliver to the AGENCY the agreement on the form provided herewith, within ten (10) days after being notified in writing by the AGENCY that the award has been made and the agreement is ready for execution.

The bid security must be submitted in original hard copy directly to the City Clerk's office prior to specified time and date for the Bid opening.

B1.14 MODIFICATION OF PROPOSAL

A modification of a bid proposal already received will be considered only if the modification is received before the time announced for the opening of bids. All modifications shall be made in writing, executed and submitted in the same form and manner as the original bid proposal.

B1.15 WITHDRAWAL OF PROPOSAL

A proposal may be withdrawn through PlanetBids, incurring no penalty, if they are submitted prior to the bid opening hour stipulated in **SECTION A – NOTICE INVITING SEALED BIDS**. Proposals may not be withdrawn after that time without forfeiture of the proposal guarantee, except as authorized by Public Contract Code sections 5100 through 5110. The withdrawal of a proposal will not prejudice the right of the bidder to submit a new proposal, providing there is time to do so.

B1.16 POSTPONEMENT OF BID OPENING

The AGENCY reserves the right to postpone the date and time for opening of bids at any time prior to the date and time announced in **SECTION A–NOTICE INVITING SEALED BIDS**.

B1.17 DISQUALIFICATION OF BIDDERS

If there is reason to believe that collusion exists among the bidders, none of the bids of the participants in such collusion will be considered. In the event that any bidder acting as a prime CONTRACTOR has an interest in more than one proposal, all such proposals will be rejected, and the bidder will be disqualified. This restriction does not apply to subcontractors or suppliers who may submit quotations to more than one bidder, and while doing so, may also submit a formal proposal as a prime CONTRACTOR.

B1.18 REJECTION OF PROPOSALS

The AGENCY reserves the right to reject any and all proposals, to waive any irregularity, and to reject any proposals which are incomplete, obscure or irregular; any proposals which omit a bid on any one or more items on which bids are required; which omit unit prices if unit prices are required; in which unit prices are unbalanced in the opinion of the AGENCY; which are accompanied by insufficient or irregular bid security; or which are from bidders who have previously failed to perform properly or to timely complete contracts of any nature.

B1.19 AWARD OF CONTRACT

The Contract will be awarded, if at all, to the lowest responsible and responsive bidder, whose bid proposal is not rejected for cause by the AGENCY. However, until an award is made, the AGENCY reserves the right to reject any or all bids, and to waive technical errors or discrepancies, if to do so is deemed to best serve the interests of the AGENCY. In no event will an award be made until all necessary investigations are made as to the responsibility and qualifications of the bidder to whom it is proposed to make such an award.

Each bidder's attention is directed to the possibility that the award of the project may be delayed for various reasons. The AGENCY reserves the right to delay the award of the project for 45 calendar days. After 45 calendar days, the low bidder may at any time request release from its bid without penalty.

The acceptance of a proposal will be evidenced by a Notice of Award of Contract in writing, delivered by mail to the bidder whose proposal is accepted. No other act of the AGENCY shall constitute acceptance of a proposal. The award of contract shall obligate the bidder whose proposal is accepted to furnish a performance bond, payment bond and maintenance bond, as well as evidence of insurance and to execute the contract set forth herein.

B1.20 RETURN OF PROPOSAL GUARANTEES

Within ten (10) calendar days after the bids are opened, the AGENCY will release the proposal guarantees accompanying the proposals which are not to be considered in making the award. Proposal guarantees for the two lowest bidders will be held until the contract has been fully executed, after which they will be returned to the respective bidders.

B2.21 EXECUTION OF CONTRACT

The contract agreement shall be executed in duplicate by the successful bidder and returned, together with the contract bonds and evidence of insurance, within ten (10) calendar days after the notification of the contract award by the AGENCY in writing. In case of failure of the successful bidder to execute the contract agreement within ten (10) calendar days after such notice, or any subsequent extension approved by AGENCY, the AGENCY at its option may consider the bidder in default, in which case the bid bond or proposal guarantee accompanying the bid shall become the property of the AGENCY. After execution by the AGENCY, one original contract shall be returned to the CONTRACTOR.

B1.22 FLEXIBILITY OF BID SCHEDULE

It is the intent of the AGENCY to award a contract to the lowest responsible and responsive bidder and the flexibility shown in the bid schedule is necessary to ensure a project within the AGENCY's budget limits and constraints.

SECTION C – PROPOSAL INFORMATION AND DOCUMENTS

FY 19-20 STREET IMPROVEMENT PROJECT
PROJECT SPECIFICATION NO. 2020-01 (002001)
IN THE CITY OF SOUTH PASADENA, CALIFORNIA

Proposal Information and Documents:

□ Bid Proposal
□ Bid Schedule
□ Bid Bond
□ Bid Guarantee
□ Bidder Information
□ Experience Statement
□ Designation of Suppliers and Subcontractors
□ Statement Regarding Insurance Coverage
□ Statement Regarding Contractor's Licensing Laws
□ Non-Collusion Affidavit

BID PROPOSAL

FY 19-20 STREET IMPROVEMENT PROJECT
PROJECT SPECIFICATION NO. 2020-01 (002001)
IN THE CITY OF SOUTH PASADENA, CALIFORNIA

CITY OF SOUTH PASADENA
1414 MISSION STREET
SOUTH PASADENA, CALIFORNIA 91030

HONORABLE MAYOR AND
MEMBERS OF THE CITY COUNCIL:

The undersigned, as bidder, declares that he/she has examined all of the contract documents and specifications contained in this project manual for the above referenced project, and that he/she will contract with the AGENCY on the form of contract provided herewith to do everything necessary for the fulfillment of this contract at the price, and on the terms and conditions therein contained.

The following are included and are to be considered as forming a part of this proposal: **BID PROPOSAL**, **BID SCHEDULE**, **BID BOND, NONCOLLUSION AFFIDAVIT, BID GUARANTEE** (if submitted in lieu of Bid Bond), **BIDDER INFORMATION**, **EXPERIENCE STATEMENT**, **DESIGNATION OF SUPPLIERS & SUBCONTRACTORS**, **BIDDER'S STATEMENT REGARDING INSURANCE COVERAGE**, and **STATEMENT REGARDING CONTRACTOR'S LICENSING LAWS**.

CONTRACTOR acknowledges receipt and inclusion of addenda _____ to _____ into this bid proposal and the contract documents.

Attached is a Bid Bond duly completed by a guarantee company authorized to carry on business in the State of California in the amount of at least 10% of the total amount of this proposal, or alternatively, there is attached a certified or cashier's check payable to the AGENCY or evidence of a cash payment to the AGENCY, in the amount of at least 10% of the total amount of our proposal.

If this proposal is accepted, we agree to sign the contract form and to furnish the Performance Bond and the Payment Bond (each to be 100% of the bid amount), the Maintenance Bond (to be 50% of the bid amount), and the required evidences of insurance within ten (10) calendar days after receiving written Notice of Award of Contract.

We further agree if our proposal is accepted and a contract for the performance of the work is entered into with the AGENCY, to so plan the work and to prosecute it with such diligence that all of the work shall be completed within the time stipulated in **B1.03 CONTRACT PERIOD/CONSTRUCTION COMPLETION DATE of SECTION B - INSTRUCTION TO BIDDERS**.

NAME OF BIDDER: _____

MAILING ADDRESS: _____

_____

TELEPHONE NO. _____

STATE CONTRACTOR'S LICENSE NO. _____

STATE OF INCORPORATION:_____

AUTHORIZED SIGNATURE:_____

TITLE:_____

DATE:_____

(If Company is a Corporation, provide corporate resolution per **B1.06 PROPOSAL of SECTION B – INSTRUCTION TO BIDDERS.**)

BID SCHEDULE

FY 19-20 STREET IMPROVEMENT PROJECT
PROJECT SPECIFICATION NO. 2020-01 (002001)
IN THE CITY OF SOUTH PASADENA, CALIFORNIA

IMPORTANT:

THE ELECTRONIC BID SCHEDULE MUST BE COMPLETED BY EACH BIDDER AND PROPERLY SUBMITTED ON PLANETBIDS.

FAILURE TO COMPLETE THE BID SCHEDULE WILL RESULT IN AN INCOMPLETE AND NON-RESPONSIVE BID.

THE ELECTRONIC BID SCHEDULE WILL BE INCORPORATED INTO THE CONTRACT DOCUMENTS.

The cost of all labor, services, material, equipment and installation necessary for the completion of the work itemized under this schedule, even though not shown or specified, shall be included in the unit price for the various items shown herein. For a description of the work associated with each bid item, see **SECTION F – SPECIAL PROVISIONS**. The AGENCY reserves the right to increase or decrease the quantity of any item or omit items as may be necessary, and the same shall in no way affect or void the contract, except that appropriate additions or deductions from the contract total price will be made at the stipulated unit price in accordance with these Contract Documents.

The AGENCY reserves the right to reject any and all bids, to waive any informality in a bid, and to make awards in the interest of the AGENCY.

The CONTRACTOR shall perform an independent take-off of the plans and bid accordingly. Quantities listed in this Bid Schedule are intended only as a guide for the CONTRACTOR as to the anticipated order of magnitude of work. The CONTRACTOR shall be responsible for verifying all estimated quantities. The CONTRACTOR will be reimbursed for the quantity of items actually installed as required by the Contract Documents, including addenda, and shown on the plans to neat line and grade.

The CONTRACTOR will not be reimbursed for work performed for his convenience, or as required to adapt to field conditions, or for unauthorized work performed outside of that required by the Contract Documents. The proposal schedule shall include all costs for labor, services, material, equipment, and installation associated with completing the work in place per the plans, specifications and details.

NAME OF BIDDER:_____

CONTRACTOR'S LICENSE NO.:_____

AUTHORIZED SIGNATURE:_____

TITLE:_____

DATE:_____

BID BOND

FY 19-20 STREET IMPROVEMENT PROJECT
PROJECT SPECIFICATION NO. 2020-01 (002001)
IN THE CITY OF SOUTH PASADENA, CALIFORNIA

KNOW ALL MEN BY THESE PRESENTS that Bidder _____, as PRINCIPAL, and _____, as SURETY, are held and firmly bound unto the City of South Pasadena as AGENCY, in the penal sum of _____ dollars ($_____), which is ten percent (10%) of the total amount bid by PRINCIPAL to AGENCY for the above stated project, for the payment of which sum, PRINCIPAL and SURETY agree to be bound, jointly and severally, firmly by these presents.

The SURETY, for value received, hereby stipulates and agrees that the obligations of said SURETY and its BOND shall be in no way impaired or affected by any extension of the time within which the AGENCY may accept such Bid; and said SURETY does hereby waive notice of any such extension.

THE CONDITIONS OF THIS OBLIGATION ARE SUCH that, whereas PRINCIPAL is about to submit a bid to AGENCY for the above stated project, if said bid is rejected, or if said bid is accepted and a contract is awarded and entered into by PRINCIPAL in the manner and time specified, and PRINCIPAL provides the required payment and performance bonds and insurance coverages to AGENCY, then this obligation shall be null and void, otherwise it shall remain in full force and effect in favor of AGENCY.

IN WITNESS WHEREOF the parties hereto have set their names, titles, hands, and seals this ____ day of _____, 20__.

PRINCIPAL* _____

_____

_____

_____

SURETY* _____

_____

_____

_____

*Provide BIDDER and SURETY name, address and telephone number and the name, title, address and telephone number for their authorized representatives. Power of Attorney must be attached.

CERTIFICATE OF ACKNOWLEDGMENT

A notary public or other officer completing this certificate verifies only the identity of the individual who signed the document to which this certificate is attached, and not the truthfulness, accuracy, or validity of that document.

State of California
County of _____

On _____ before me, _____,
(insert name and title of the officer)

personally appeared _____
who proved to me on the basis of satisfactory evidence to be the person(s) whose name(s) is/are subscribed to the within instrument and acknowledged to me that he/she/they executed the same in his/her/their authorized capacity(ies), and that by his/her/their signature(s) on the instrument the person(s), or the entity upon behalf of which the person(s) acted, executed the instrument.

I certify under PENALTY OF PERJURY under the laws of the State of California that the foregoing paragraph is true and correct.

WITNESS my hand and official seal.

Signature_____ (SEAL)

BID GUARANTEE

FY 19-20 STREET IMPROVEMENT PROJECT
PROJECT SPECIFICATION NO. 2020-01 (002001)
IN THE CITY OF SOUTH PASADENA, CALIFORNIA

Note: The following statement shall be used if other than a bid surety bond accompanies bid.

"Accompanying this proposal is a money order*, certified check*, cashier's check*, cash*, payable to the order of the City of South Pasadena in the amount of _____ Dollars ($_____) which is at least ten percent (10%) of the total amount of this bid. The proceeds of this bid guarantee shall become the property of the City of South Pasadena provided this bid is accepted by said City, through action of its legally constituted contracting authorities, and the undersigned fails to execute a contract and furnish the required bonds and insurance within the stipulated time. Otherwise, the proceeds of this bid guarantee shall be returned to the undersigned."

NAME OF BIDDER: _____

MAILING ADDRESS: _____

_____

_____

AUTHORIZED SIGNATURE: _____

TITLE: _____

DATE: _____

(*circle one option)

BIDDER INFORMATION

FY 19-20 STREET IMPROVEMENT PROJECT
PROJECT SPECIFICATION NO. 2020-01 (002001)
IN THE CITY OF SOUTH PASADENA, CALIFORNIA

BIDDER certifies that the following information is true and correct:

Name of Bidder:_____

Business Address:_____

Telephone:_____FAX:_____

E-mail: _____

CONTRACTOR's License No.:_____ Date License Issued:_____

License Expiration Date:_____

The following are the names, titles, addresses, and phone numbers of all individuals, firm members, partners, joint venturers, and/or corporate officers having a principal interest in this proposal: (Name / Title / Address / Telephone)

_____

_____

_____

_____

Any voluntary or involuntary bankruptcy judgments against any principal having an interest in this proposal are as follows: (Type of Judgment / Date)

_____

_____

_____

All current and prior DBA's, aliases, and/or fictitious business names for any principal having an interest in this proposal are as follows: (Principal / DBA's / Applicable Dates)

_____

_____

_____

Prior Disqualification

Has your firm ever been disqualified from performing work for any City, County, Public or Private Contracting entity? Yes / No _____. If yes, provide the following information. (If more than once, use separate sheets):

Date: _____ Entity:_____

Location:_____

Reason:_____

Provide Status and any Supplemental Statement:_____

_____

_____

_____

_____

Has your firm been reinstated by this entity? Yes / No _____

Violations of Federal or State Law

A. Has your firm or its officers been assessed any penalties by any agency for noncompliance, violations of Federal or State labor laws and/or business or licensing regulations within the past five (5) years relating to your construction projects?

Yes / No: _____ Federal / State: _____

If "yes", identify and describe, (including status):_____

_____

_____

_____

_____

Have the penalties been paid? Yes / No:_____

B. Does you firm or its officers have any ongoing investigations by any agency regarding violations of the State Labor Code, California Business and Professions Code or State Licensing laws?

Yes / No:_____ Codes / Laws:_____ Section / Article:_____

If "yes", identify and describe (including status):_____

_____

_____

I declare under penalty of perjury under the laws of the State of California that all of the representations made in this **BIDDER INFORMATION** are true and correct. Executed this _____ day of _____, 20__, at _____, California.

Authorized Representative: Signature _____

Title _____

EXPERIENCE STATEMENT

FY 19-20 STREET IMPROVEMENT PROJECT
PROJECT SPECIFICATION NO. 2020-01 (002001)
IN THE CITY OF SOUTH PASADENA, CALIFORNIA

Pursuant to this **BID PROPOSAL** and **QUALIFICATION OF BIDDERS**, the following is a record of the Bidder's experience in construction of a type similar in magnitude and character to that contemplated under this contract. Included in this section should be a complete list of references for similar projects in terms of scope of work, value of work, and time constraints. The CONTRACTOR must demonstrate that he/she has experience with this type of project and can manage this project effectively. If necessary, additional numbered pages can be attached to this page. The CONTRACTOR must be properly licensed to perform the work in this project as determined by the State CONTRACTOR's License Board.

Project Title:_____ Client:_____

Date: _____ Project Value: _____ Contact: _____ Tel #_____

Description: _____

_____

_____

Subject to Federal Labor Standards: Yes No

Project Title:_____ Client:_____

Date: _____ Project Value: _____ Contact: _____ Tel #_____

Description: _____

_____

_____

Subject to Federal Labor Standards: Yes No

EXPERIENCE STATEMENT (Continued)

FY 19-20 STREET IMPROVEMENT PROJECT
PROJECT SPECIFICATION NO. 2020-01 (002001)
IN THE CITY OF SOUTH PASADENA, CALIFORNIA

Project Title:_____ Client:_____

Date: _____ Project Value: _____ Contact: _____ Tel #_____

Description: _____

_____

_____

Subject to Federal Labor Standards: Yes No

Project Title:_____ Client:_____

Date: _____ Project Value: _____ Contact: _____ Tel #_____

Description: _____

_____

_____

Subject to Federal Labor Standards: Yes No

I declare under penalty of perjury under the laws of the State of California that all of the representations made in this **EXPERIENCE STATEMENT** are true and correct. Executed this _____ day of _____, 20__, at _____, California.

Authorized Representative: Signature _____

Title _____

DESIGNATION OF SUPPLIERS AND SUBCONTRACTORS

FY 19-20 STREET IMPROVEMENT PROJECT
PROJECT SPECIFICATION NO. 2020-01 (002001)
IN THE CITY OF SOUTH PASADENA, CALIFORNIA

The following is a list of subcontractors and suppliers, as defined in 2-3 SUBCONTRACTS of the Standard Specifications, who will perform work or provide materials of value in excess of one-half of one percent of the total bid price or $10,000, whichever is greater.

No subcontractor shall perform work in excess of the amount specified in 2-3 SUBCONTRACTS of the Standard Specifications, without the written approval of the AGENCY.

The CONTRACTOR is responsible to ensure that appropriate provisions are to be inserted in all subcontracts to bind subcontractors to the contract requirements as contained herein.

Each subcontractor must agree to comply with all applicable Federal, State, and local requirements.

Name, License No., and Address of Subcontractor	License No.	MBE/ WBE (Y/N)	Work Subcontracted (List Line Items, e.g. #3, #6, etc.)	Portion of Work (% of Contract Price)

Name, License No., and Address of Subcontractor	License No.	MBE/ WBE (Y/N)	Work Subcontracted	Portion of Work (% of Contract Price)

These representations are made under the penalty of perjury under the laws of the State of California. The undersigned hereby certifies that each subcontractor has been notified in writing of its equal opportunity obligations.

NAME OF BIDDER: _____

AUTHORIZED SIGNATURE: _____

Date: _____

STATEMENT REGARDING INSURANCE COVERAGE

FY 19-20 STREET IMPROVEMENT PROJECT
PROJECT SPECIFICATION NO. 2020-01 (002001)
IN THE CITY OF SOUTH PASADENA, CALIFORNIA

The undersigned representative of Bidder hereby certifies that he/she has reviewed the insurance coverage requirements specified in **5-4 INSURANCE** of Section E, Standard Specifications and Section F, Special Provisions. Should Bidder be awarded the contract for the work, the undersigned further certifies that Bidder can meet all of these specification requirements for insurance including insurance coverage of his/her subcontractors.

NAME OF BIDDER: _____

MAILING ADDRESS: _____

_____

_____

AUTHORIZED SIGNATURE: _____

TITLE: _____

DATE: _____

STATEMENT REGARDING CONTRACTOR'S LICENSING LAWS

FY 19-20 STREET IMPROVEMENT PROJECT
PROJECT SPECIFICATION NO. 2020-01 (002001)
IN THE CITY OF SOUTH PASADENA, CALIFORNIA

[Business & Professions Code § 7028.15]
[Public Contract Code § 20103.5]

I, the undersigned, certify that I am aware of the following provisions of California law and that I, or the entity on whose behalf this certification is given, hold a currently valid California CONTRACTOR's license as set forth below:

Business & Professions Code § 7028.15:

a) **It is a misdemeanor for any person to submit a bid to a public agency to engage in the business or act in the capacity of a CONTRACTOR within this state without having a license therefor,** except in any of the following cases:

(1)The person is particularly exempted from this chapter.

(2)The bid is submitted on a state project governed by Section 10164 of the Public Contract Code or on any local agency project governed by Section 20104 [now § 20103.5] of the Public Contract Code.

b) If a person has been previously convicted of the offense described in this section, the court shall impose a fine of 20 percent of the price of the contract under which the unlicensed person performed contracting work, or four thousand five hundred dollars ($4,500), whichever is greater, or imprisonment in the county jail for not less than 10 days nor more than six months, or both.

In the event the person performing the contracting work has agreed to furnish materials and labor on an hourly basis, "the price of the contract" for the purposes of this subdivision means the aggregate sum of the cost of materials and labor furnished and the cost of completing the work to be performed.

c) This section shall not apply to a joint venture license, as required by Section 7029.1. However, at the time of making a bid as a joint venture, each person submitting the bid shall be subject to this section with respect to his/her individual licenser.

d) This section shall not affect the right or ability of a licensed architect, land surveyor, or registered professional engineer to form joint ventures with licensed CONTRACTORs to render services within the scope of their respective practices.

e) Unless one of the foregoing exceptions applies, a bid submitted to a public agency by a CONTRACTOR who is not licensed in accordance with this chapter shall be considered nonresponsive and shall be rejected by the public agency. Unless one of the foregoing exceptions applies, a local public agency shall, before awarding a contract or issuing a purchase order, verify that the CONTRACTOR was properly licensed when the CONTRACTOR submitted the bid. Notwithstanding any other provision of law, unless one of the foregoing exceptions applies, the registrar may issue a citation to any public officer or employee of a public entity who knowingly awards a contract or issues a purchase order to a CONTRACTOR who is not licensed pursuant to this chapter. The amount of civil penalties, appeal, and finality of such citations shall be subject to Sections 7028.7 to 7028.13, inclusive. **Any contract awarded to, or any purchase order issued to, as CONTRACTOR who is not licensed pursuant to this chapter is void.**

f) Any compliance or noncompliance with subdivision (e) of this section, as added by Chapter 863 of the Statutes of 1989, shall not invalidate any contract or bid awarded by a public agency during which time that subdivision was in effect.

g) A public employee or officer shall not be subject to a citation pursuant to this section if the public employee, officer, or employing agency made an inquiry to the board for the purposes of verifying the license status of any person or CONTRACTOR and the board failed to respond to the inquiry within three business days. For purposes of this section, a telephone response by the board shall be deemed sufficient.

Public Contract Code § 20103.5:

In all contracts subject to this part where federal funds are involved, no bid submitted shall be invalidated by the failure of the bidder to be licensed in accordance with the laws of this state. However, at the time the contract is awarded, the CONTRACTOR shall be properly licensed in accordance with the laws of this state. The first payment for work or material under any contract shall not be made unless and until the Registrar of CONTRACTORs verifies to the AGENCY that the records of the Contractors' State License Board indicate that the CONTRACTOR was properly licensed at the time the contract was awarded. Any bidder or CONTRACTOR not so licensed shall be subject to all legal penalties imposed by law, including, but not limited to, any appropriate disciplinary action by the Contractors' State License Board. The AGENCY shall include a statement to that effect in the standard form of pre-qualification questionnaire and financial statement. **Failure of the bidder to obtain proper and adequate licensing for an award of a contract shall constitute a failure to execute the contract and shall result in the forfeiture of the security of the bidder.**

CONTRACTOR's License Number: _____

License Expiration Date:_____

Authorized Signature:_____

Date:_____

NON-COLLUSION AFFIDAVIT

The undersigned declares:

I am the _____ of _____, the party making the foregoing bid.

The bid is not made in the interest of, or on behalf of, any undisclosed person, partnership, company, association, organization, or corporation. The bid is genuine and not collusive or sham. The bidder has not directly or indirectly induced or solicited any other bidder to put in a false or sham bid. The bidder has not directly or indirectly colluded, conspired, connived, or agreed with any bidder or anyone else to put in a sham bid, or to refrain from bidding. The bidder has not in any manner, directly or indirectly, sought by agreement, communication, or conference with anyone to fix the bid price of the bidder or any other bidder, or to fix any overhead, profit, or cost element of the bid price, or of that of any other bidder. All statements contained in the bid are true. The bidder has not, directly or indirectly, submitted his or her bid price or any breakdown thereof, or the contents thereof, or divulged information or data relative thereto, to any corporation, partnership, company, association, organization, bid depository, or to any member or agent thereof, to effectuate a collusive or sham bid, and has not paid, and will not pay, any person or entity for such purpose.

Any person executing this declaration on behalf of a bidder that is a corporation, partnership, joint venture, limited liability company, limited liability partnership, or any other entity, hereby represents that he or she has full power to execute, and does execute, this declaration on behalf of the bidder.

I declare under penalty of perjury under the laws of the State of California that the foregoing is true and correct and that this declaration is executed on the ___ day _____, 20__ at _____, California.

_____
CONTRACTOR's Signer's Name

_____
CONTRACTOR's Signer's Title

_____
CONTRACTOR's Business Name

Contractor's Business Address:

_____
Mailing Street Address

_____
City, State, Zip Code

_____
Telephone #

SECTION D – CONTRACT INFORMATION AND DOCUMENTS

FY 19-20 STREET IMPROVEMENT PROJECT
PROJECT SPECIFICATION NO. 2020-01 (002001)
IN THE CITY OF SOUTH PASADENA, CALIFORNIA

Contract Information and Documents:

□ Contract Agreement and Attachment A
□ Payment Bond
□ Faithful Performance Bond
□ Maintenance Bond
□ Worker's Compensation Insurance Certificate
□ Endorsements to Insurance Policy

CONTRACT AGREEMENT

FY 19-20 STREET IMPROVEMENT PROJECT
PROJECT SPECIFICATION NO. 2020-01 (002001)
IN THE CITY OF SOUTH PASADENA, CALIFORNIA

THIS AGREEMENT ("AGREEMENT") is made and entered into for the above-stated project this _____ day of_____, 20__ *(Council Action Date)*, BY AND BETWEEN the City of South Pasadena, a municipal corporation, hereafter designated as "AGENCY", and _____ a _____
[CONTRACTOR'S BUSINESS NAME] [corporation, partnership, limited liability company, or other business form]

in the State of _____, hereafter designated as "CONTRACTOR."

WITNESSETH that AGENCY and CONTRACTOR have mutually agreed as follows:

1) **Project Name:** FY 19-20 Street Improvement Project, SPECIFICATION NO. 2020-01 (002001)
2) **Project Scope of Work:** CONTRACTOR shall provide and install:

All materials, equipment, tools, labor, and incidentals required to complete the improvements shown on the Specifications and Contract Documents. The work performed under this contract is summarized in the Notice Inviting Sealed Bids and includes, but is not limited to each bid item listed in the Contractor's Bid Proposal, as covered in the Standard Specifications, and as described in the corresponding items on the following pages. The work in general, to be performed pursuant to these specifications, consists of pavement rehabilitation and replacement of mains, valves, water services, meters, and other appurtenances. The project also includes repair of damaged PCC curb and gutter, sidewalks, and driveways at various locations within the project limits, sawcut, removal and disposal of existing asphalt roadway sections, removal of macadam and subgrade, cold milling of existing pavement, subgrade preparation and compaction, crushed miscellaneous base (CMB), asphalt concrete pavement, removal and reconstruction of damaged PCC curb and gutter, sidewalk, driveway approaches, and ADA curb ramps, utility adjustments, installation of new water meters, services, valves, and appurtenances, sewer line repairs, traffic signing, thermoplastic striping and pavement markings; traffic control and all appurtenant work thereto necessary for the proper construction of the contemplated improvements, in accordance to Plans and Specification entitled as FY 19-20 Street Improvement Project 2020-01 (002001).

The limits of work include:

- **Arroyo Verde Road (Marmion Way to Monterey Road)**
- **Glendon Way (Lyndon Street to Monterey Road)**
- **Mill Road (Garfield Avenue to end of roadway)**
- **Milan Avenue (Oak Street to Edgewood Drive)**
- **Edgewood Drive (Milan Avenue to Wayne Avenue)**

- **Pine Street (Meridian Avenue to Huntington Drive)**
- **Oneonta Knoll Street (Fremont Avenue to Primrose Avenue)**
- **Maple Street (Fremont Avenue to Primrose Avenue)**
- **Maple Street (Meridian Avenue to Huntington Drive)**

3) **Contract Documents:** The complete contract and agreement ("AGREEMENT") consists of this Contract Agreement, including all attachments hereto, and:

- Approved Plans and Specifications for City Project No. 2020-01 (002001)
- Notice Inviting Sealed Bids
- Instructions to Bidders
- Information for Bidders
- Contractor's Bid Proposal
- Bid Schedule
- Standard Specifications
- Special Provisions
- All reference specifications, plans, details, standard drawings, and appendices
- Bonds, insurance certificates, permits, notices, and affidavits
- Appendices, Addendums, and Memorandums
- And all mutually agreed-upon modifications and amendments thereto.

4) **Compensation:** CITY agrees to pay, and CONTRACTOR agrees to accept in full payment for the Work, the stipulated sum of _____ Dollars, ($_____).

5) **Time of Completion:** _____ Working Days *[see B1.03 CONTRACT PERIOD/CONSTRUCTION COMPLETION DATE of Section B Instruction to Bidders]*.

6) **Liquidated Damages:** $6,700 for each calendar day delay beyond the Time of Completion *[see 6-9 LIQUIDATED DAMAGES of Section F – Special Provisions]*.

7) **Notices:** Any notices, bills, invoices, or reports required by this Agreement shall be addressed to:

To CITY:

City of South Pasadena
Public Works Department
1414 Mission Street
South Pasadena, CA 91030

To CONTRACTOR:

Contractor's Name _____
Address _____
_____
City, State Zip Code _____

IN WITNESS WHEREOF the parties hereto for themselves, their heirs, executors, administrators, successors, and assigns do hereby agree to the full performance of the covenants herein contained and have caused this AGREEMENT to be executed in duplicate by setting hereunto their names, titles, hands, and seals this _____ day of _____, 20__ *(Council Action Date)*

CONTRACTOR: _____
[CONTRACTOR'S BUSINESS NAME]

_____
CONTRACTOR's Sign Name, Title

CONTRACTOR's License No. _____

AGENCY: _____ _____
L. Todd Hileman, City Manager — Date
City of South Pasadena

ATTESTED: _____ _____
Hector Gomez, Chief City Clerk — Date
City of South Pasadena

APPROVED AS TO FORM: _____ _____
Roxanne Diaz, City Attorney — Date
City of South Pasadena

CERTIFICATE OF ACKNOWLEDGMENT

A notary public or other officer completing this certificate verifies only the identity of the individual who signed the document to which this certificate is attached, and not the truthfulness, accuracy, or validity of that document.

State of California
County of _____

On _____ before me, _____,
(insert name and title of the officer)

personally appeared _____
who proved to me on the basis of satisfactory evidence to be the person(s) whose name(s) is/are subscribed to the within instrument and acknowledged to me that he/she/they executed the same in his/her/their authorized capacity(ies), and that by his/her/their signature(s) on the instrument the person(s), or the entity upon behalf of which the person(s) acted, executed the instrument.

I certify under PENALTY OF PERJURY under the laws of the State of California that the foregoing paragraph is true and correct.

WITNESS my hand and official seal.

Signature_____ (SEAL)

ATTACHMENT A

ADDITIONAL TERMS AND CONDITIONS OF THE AGREEMENT

ARTICLE I: Contract Documents

The complete contract and agreement ("AGREEMENT") consists of the Contract Documents described on the Contract Agreement, and all terms and conditions of this Attachment are incorporated therein. In the event of conflict between these documents, precedence shall be determined under section 2-5.2 of the Standard Specifications.

All of the provisions of the Contract Documents are made a part hereof as though fully set forth herein.

ARTICLE II: Scope of Work

For and in consideration of the payments and agreements to be made and performed by AGENCY, CONTRACTOR agrees to furnish all materials and equipment and perform all work required for the above-stated project, and to fulfill all other obligations as set forth in the aforesaid Contract Documents.

AGENCY hereby employs CONTRACTOR to provide the materials, do the work, and fulfill the obligations according to the terms and conditions herein contained and referred to, for the prices provided herein, and hereby contracts to pay the same at the time, in the manner, and upon the conditions set forth in this AGREEMENT.

In entering into a public works contract or a subcontract to supply goods, services, or materials pursuant to this AGREEMENT, CONTRACTOR offers and agrees to assign to the AGENCY all rights, title, and interest in and to all causes of action it may have under Section 4 of the Clayton Act (15 U.S.C. Sec. 15) or under the Cartwright Act (Chapter 2 (Section 16700, et seq.) of Part 2 of Division 7 of the Business and Professions Code), arising from purchases of goods, services, or materials pursuant to the public works contract or the subcontract. This assignment shall be made and become effective at the time the awarding body tenders final payment to CONTRACTOR, without further acknowledgment by the parties.

ARTICLE III: Compensation

A. CONTRACTOR agrees to receive and accept the prices set forth in the Bid Proposal and Bid Schedule as full compensation for furnishing all materials, performing all work, and fulfilling all obligations hereunder. In no event shall the total compensation and costs payable to CONTRACTOR under this Agreement exceed the sum shown on the Contract Agreement, unless specifically approved in advance and in writing by AGENCY.

Such compensation shall cover all expenses, losses, damages, and consequences arising out of the nature of the work during its progress or prior to its acceptance including those for well and faithfully completing the work and the whole thereof in the manner and time specified in the aforesaid Contract Documents; and also including those arising from actions of the elements,

unforeseen difficulties or obstructions encountered in the prosecution of the work, suspension or discontinuance of the work, and all other unknowns or risks of any description connected with the work. Such unforeseen difficulties or obstructions includes any act of God, the elements, strike, walkout, or any other cause beyond CONTRACTOR's reasonable control that occurs before AGENCY accepts the work as complete.

B. This AGREEMENT is subject to the provisions of Article 1.7 (commencing at Section 20104.50) of Division 2, Part 3 of the Public Contract Code regarding prompt payment of CONTRACTORs by local governments. Article 1.7 mandates certain procedures for the payment of undisputed and properly submitted payment requests within 30 days after receipt, for the review of payment requests, for notice to CONTRACTOR of improper payment requests, and provides for the payment of interest on progress payment requests which are not timely made in accordance with that Article. This AGREEMENT hereby incorporates the provisions of Article 1.7 as though fully set forth herein.

C. At the request and expense of CONTRACTOR, securities equivalent to the amount withheld shall be deposited with AGENCY, or with a state or federally chartered bank in this state as the escrow agent, who shall then pay those moneys to CONTRACTOR upon AGENCY's confirmation of CONTRACTOR'S satisfactory completion of this AGREEMENT. At any time during the term of this AGREEMENT CONTRACTOR may, at its own expense, substitute securities for funds otherwise withheld as retention (or the retained percentage) in accordance with Public Contract Code § 22300.

ARTICLE IV: Labor Code

AGENCY and CONTRACTOR acknowledge that this AGREEMENT is subject to the provisions of Division 2, Part 7, Chapter 1 (commencing with Section 1720) of the California Labor Code relating to public works and public agencies and agree to be bound by all the provisions thereof as though set forth fully herein. Full compensation for conforming to the requirements of the Labor Code and with other Federal, State, and local laws related to labor, and rules, regulations and ordinances which apply to any work performed pursuant to this AGREEMENT is included in the price for all contract items of work involved.

This AGREEMENT is further subject to prevailing wage law, including, but not limited to, the following:

A. The CONTRACTOR shall pay the prevailing wage rates for all work performed under the AGREEMENT. When any craft or classification is omitted from the general prevailing wage determinations, the CONTRACTOR shall pay the wage rate of the craft or classification most closely related to the omitted classification. The CONTRACTOR shall forfeit as a penalty to AGENCY $200.00, or any greater penalty provided in the Labor Code for each Calendar Day, or portion thereof, for each worker paid less than the prevailing wage rates for any work done under the AGREEMENT in violation of the provisions of the Labor Code whether such worker is employed in the execution of the work by CONTRACTOR or by any Subcontractor under CONTRACTOR. In addition, CONTRACTOR shall pay each worker the difference between such prevailing wage rates and the amount paid to each worker for each Calendar Day, or portion thereof, for which each worker was paid less than the prevailing wage rate.

B. CONTRACTOR shall comply with the provisions of Labor Code Section 1777.5 concerning the employment of apprentices on public works projects, and further agrees that CONTRACTOR is responsible for compliance with Section 1777.5 by all of its subcontractors.

C. Pursuant to Labor Code § 1725.5, CONTRACTOR and any subcontractor must be registered with the California Department of Industrial Relations for any bid proposal submitted on or after March 1, 2015, and for any contract for public work entered into on or after April 1, 2015. Further, this project is subject to compliance monitoring and enforcement by the Department of Industrial Relations.

D. Pursuant to Labor Code § 1776, CONTRACTOR and any subcontractor shall keep accurate payroll records, showing the name, address, social security number, work classification, straight time and overtime hours worked each day and week, and the actual per diem wages paid to each journeyman, apprentice, worker, or other employee employed by him or her in connection with this AGREEMENT. Each payroll record shall contain or be verified by a written declaration that it is made under penalty of perjury, stating both of the following: (1) The information contained in the payroll record is true and correct; and (2) The employer has complied with the requirements of Labor Code §§ 1811, and 1815 for any work performed by his or her employees on the public works project. The payroll records enumerated under subdivision (a) shall be certified and shall be available for inspection at all reasonable hours as required by Labor Code § 1776.

E. This AGREEMENT is further subject to 8-hour workday and wage and hour penalty law, including, but not limited to, Labor Code Sections 1810 and 1813, as follows:

CONTRACTOR shall strictly adhere to the provisions of the Labor Code regarding the 8-hour day and the 40-hour week, overtime, Saturday, Sunday and holiday work and nondiscrimination based on race, religious creed, color, national origin, ancestry, physical disability, mental disability, medical condition, marital status, sex, or sexual orientation, except as provided in Section 12940 of the Government Code. Pursuant to the provisions of the Labor Code, eight hours' labor shall constitute a legal day's work. Work performed by CONTRACTOR's employees in excess of eight hours per day, and 40 hours during any one week, must include compensation for all hours worked in excess of eight hours per day, or 40 hours during any one week, at not less than one and one-half times the basic rate of pay. CONTRACTOR shall forfeit as a penalty to AGENCY $25.00, or any greater penalty set forth in the Labor Code for each worker employed in the execution of the work by CONTRACTOR or by any Subcontractor of CONTRACTOR, for each Calendar Day during which such worker is required or permitted to the work more than eight hours in one Calendar Day or more than 40 hours in any one calendar week in violation of the Labor Code.

F. This AGREEMENT is subject to Public Contract Code Section 6109: CONTRACTOR shall be prohibited from performing work on this project with a subcontractor who is ineligible to perform work on the project pursuant to Sections 1777.1 or 1777.7 of the Labor Code.

ARTICLE V: Work Site Conditions

A. In compliance with and pursuant to Government Code Section 4215, AGENCY shall assume the responsibility, as between the parties to this AGREEMENT, for the timely removal, relocation, or protection of existing main- or trunk-line utility facilities located on the site of any construction project that is a subject of this AGREEMENT, if such utilities are not identified by AGENCY in

the plans and specifications made a part of the invitation for bids. The Contract Documents shall include provisions to compensate CONTRACTOR for the costs of locating, repairing damage not due to the failure of CONTRACTOR to exercise reasonable care, and removing or relocating such utility facilities not indicated in the plans and specifications with reasonable accuracy, and for equipment on the project necessarily idled during such work. CONTRACTOR shall not be assessed liquidated damages for delay in completion of the project when such delay was caused by the failure of AGENCY or the owner of a utility to provide for removal or relocation of such utility facilities.

B. To the extent that the work requires trenches in excess of five feet (5') and is estimated to cost more than $25,000, prior to any excavation, CONTRACTOR must provide the AGENCY, or a registered civil or structural engineer employed by the AGENCY to whom authority has been delegated to accept such plans, a detailed plan showing the design of shoring, bracing, sloping, or other provisions to be made for worker protection from the hazard of caving ground during the excavation of such trench or trenches. If such plan varies from the shoring system standards, the plan shall be prepared by a registered civil or structural engineer. Nothing in this section shall be deemed to allow the use of a shoring, sloping, or protective system less effective than that required by the Construction Safety Orders.

C. This AGREEMENT is further subject to Public Contract Code Section 7104 with regard to any trenches deeper than four feet (4') involved in the proposed work as follows:

CONTRACTOR shall promptly, and before the following conditions are disturbed, notify AGENCY, in writing, of any:

(1) Material that CONTRACTOR believes may be hazardous waste, as defined in Section 25117 of the Health and Safety Code, which is required to be removed to a Class I, Class II, or Class III disposal site in accordance with existing law.

(2) Subsurface or latent physical conditions at the site differing from those indicated by all available information provided prior to the deadline for submission of bids.

(3) Unknown physical conditions at the site of any unusual nature, different materially from those ordinarily encountered and generally recognized as inherent in work of the character provided for in the contract.

AGENCY shall promptly investigate the conditions, and if it finds that the conditions do materially so differ, or involve hazardous waste, and cause a decrease or increase in CONTRACTOR's cost of, or the time required for, performance of any part of the work, AGENCY shall issue a change order under the procedures described in this AGREEMENT.

In the event that a dispute arises between AGENCY and CONTRACTOR whether the conditions materially differ, or involve hazardous waste, or cause a decrease or increase in CONTRACTOR's cost of, or time required for, performance of any part of the work, CONTRACTOR shall not be excused from any scheduled completion date provided in the AGREEMENT but shall proceed with all work to be performed under the AGREEMENT. CONTRACTOR shall retain any and all

rights provided either by contract or by law which pertain to the resolution of disputes and protests between the contracting parties.

ARTICLE VI: Insurance

A. With respect to performance of work under this AGREEMENT, CONTRACTOR shall maintain, and shall require all of its subcontractors to maintain, insurance as required by Section E "Standard Specifications" of the Contract Documents.

B. This AGREEMENT is further subject to Workers' Compensation obligations, including, but not limited to, California Labor Code Sections 1860 and 1861 as follows:

CONTRACTOR shall take out and maintain, during the life of this contract, Worker's Compensation Insurance for all of CONTRACTOR's employees employed at the site of improvement; and, if any work is sublet, CONTRACTOR shall require the subcontractor similarly to provide Worker's Compensation Insurance for all of the latter's employees, unless such employees are covered by the protection afforded by CONTRACTOR. CONTRACTOR and any of CONTRACTOR's subcontractors shall be required to provide AGENCY with a written statement acknowledging its obligation to secure payment of Worker's Compensation Insurance as required by Labor Code § 1861; to wit: 'I am aware of the provisions of Section 3700 of the Labor Code which require every employer to be insured against liability for workers' compensation or to undertake self-insurance in accordance with the provisions of that code, and I will comply with such provisions before commencing the performance of the work of this contract.' If any class of employees engaged in work under this AGREEMENT at the site of the Project is not protected under any Worker's Compensation law, CONTRACTOR shall provide and shall cause each subcontractor to provide adequate insurance for the protection of employees not otherwise protected. CONTRACTOR shall indemnify and hold harmless AGENCY for any damage resulting from failure of either CONTRACTOR or any subcontractor to take out or maintain such insurance.

Any available insurance proceeds broader than or in excess of the specified minimum insurance coverage requirements or limits shall be available to AGENCY as additional insured. Further, the requirements for coverage and limits shall be the greater of (1) the maximum coverage and limits specified in this Agreement, or (2) the broader coverage and maximum limits of coverage of any insurance policy or proceeds available to the named insured. Insurance provided by CONTRACTOR under this Contract shall not replace or substitute for CONTRACTOR's indemnification obligations in Article VII.

CONTRACTOR's insurance, including all endorsements, shall be primary to any coverage available to AGENCY. Any insurance or self-insurance maintained by AGENCY and/or its officers, employees, agents, or volunteers, shall be excess of CONTRACTOR's insurance and shall not contribute with it.

ARTICLE VII: Indemnification

To the fullest extent permitted by law, CONTRACTOR shall, at its sole cost and expense, fully defend, indemnify and hold harmless AGENCY, its authorized representatives and their respective

subsidiaries, affiliates, members, directors, officers, subcontractors (including governmental agencies), suppliers, employees and agents (collectively, the "Indemnitees") from and against any and all claims, actions, demands, costs, judgments, liens, penalties, liabilities, damages, losses, and expenses, including but not limited to any fees of accountants, attorneys or other professionals (collectively "Liabilities"), arising out of, in connection with, resulting from or related to, any act, omission, fault or negligence of CONTRACTOR, CONTRACTOR's Representative, or any of its officers, agents, employees, Subcontractors or Suppliers, or any person or organization directly or indirectly employed by any of them (Collectively, the "Indemnitors"), in connection with or relating to or claimed to be in connection with or relating to the work performed under this AGREEMENT. Indemnification includes, but is not limited to, all claims, actions, demands, costs, judgments, liens, penalties, liabilities, damages, losses, and expenses arising out of, in connection with, resulting from or related to changes to the natural environment or environmental harms caused in whole or in part by work performed under this AGREEMENT.

If CONTRACTOR is a joint venture or partnership, each venturer or partner shall be jointly and severally liable for any and all of the duties and obligations of CONTRACTOR that are assumed under or arise out of this AGREEMENT. Each of such venturers or partners waives notice of the breach or non-performance of any undertaking or obligation of CONTRACTOR contained in, resulting from, or assumed under this AGREEMENT, and the failure to give any such notice shall not affect or impair such venturer's or partner's joint and several liability hereunder.

AGENCY may request a deposit for defense costs from CONTRACTOR with respect to a claim. If AGENCY requests a defense deposit, CONTRACTOR shall provide it within 15 days of the request.

ARTICLE VIII: Binding Effect

AGENCY and CONTRACTOR each bind itself, its partners, successors, assigns, and legal representatives to the other party hereto and to its partners, successors, assigns, and legal representatives in respect of all covenants, agreements, and obligations contained in the Contract Documents. This AGREEMENT is not assignable nor the performance of either party's duties delegable without the prior written consent of the other party. Any attempted or purported

assignment or delegation of any of the rights of obligations of either party without the prior written consent of the other shall be void and of no force and effect.

ARTICLE IX: Dispute Resolution

A. All disputes arising out of this AGREEMENT are subject to a mandatory step-by-step claims submission and evaluation process as a precondition to legal action in accordance with Public Contracts Code § 9204.

B. Any court action arising out of this AGREEMENT shall be filed in the Los Angeles County Superior Court. Any alternative dispute resolution proceeding arising out of this AGREEMENT shall be heard in the County of Los Angeles.

C. AGENCY shall have full authority to compromise or otherwise settle any claim relating to this AGREEMENT or any part hereof at any time. AGENCY shall provide timely notification to CONTRACTOR of the receipt of any third-party claim relating to this AGREEMENT. AGENCY shall be entitled to recover its reasonable costs incurred in providing the notification required by this section.

D. This AGREEMENT is further subject to the provisions of Article 1.5 (commencing at Section 20104) of Division 2, Part 3 of the Public Contract Code regarding the resolution of public works claims of less than $375,000. Article 1.5 mandates certain procedures for the filing of claims and supporting documentation by CONTRACTOR, for the response to such claims by the AGENCY, for a mandatory meet and confer conference upon the request of CONTRACTOR, for mandatory nonbinding mediation in the event litigation is commenced, and for mandatory judicial arbitration upon the parties' failure to resolve the dispute through mediation. This AGREEMENT hereby incorporates the provisions of Article 1.5 as though fully set forth herein.

ARTICLE X: Independent CONTRACTOR

CONTRACTOR is and shall at all times remain as to AGENCY, a wholly independent CONTRACTOR. Neither AGENCY nor any of its agents shall have control of the conduct of CONTRACTOR or any of CONTRACTOR's employees, except as herein set forth. CONTRACTOR shall not at any time or in any manner represent that it or any of its agents or employees are in any manner agents or employees of AGENCY.

ARTICLE XI: Taxes

CONTRACTOR is responsible for paying all retail, sales and use, transportation, export, import, special or other taxes and duties applicable to, and assessable against any work, materials, equipment, services, processes, and operations incidental to or involved in this AGREEMENT. The CONTRACTOR is responsible for ascertaining and arranging to pay such taxes and duties. The prices established in this AGREEMENT shall include compensation for any taxes the CONTRACTOR is required to pay by laws and regulations in effect as of the execution of this AGREEMENT.

ARTICLE XII: Notices

All notices and communications shall be sent in writing to the parties at the addresses listed on the Contract Agreement.

ARTICLE XIII: Entire Agreement

This AGREEMENT supersedes any and all other agreements, either oral or written, between the parties and contains all of the covenants and agreements between the parties pertaining to the work of improvements described herein. Each party to this AGREEMENT acknowledges that no representations, inducements, promises or agreements, orally or otherwise, have been made by any party, or anyone acting on behalf of any party, which are not embodied herein, and that any other agreement, statement or promise not contained in this AGREEMENT shall not be valid or binding. Any modification of this AGREEMENT will be effective only if signed by the party to be charged.

The benefits and obligations of this AGREEMENT shall inure to and be binding upon the representatives, agents, partners, heirs, successors and assigns of the parties hereto. This AGREEMENT shall be construed pursuant to the laws of the State of California.

ARTICLE XIV: Authority to Contract

The signatories hereto represent that they are authorized to sign on behalf of the respective parties they represent and are competent to do so, and each of the parties hereto hereby irrevocably waives any and all rights to challenge signatures on these bases.

ARTICLE XV: General Provisions

A. All reports, documents, or other written material ("written products" herein) developed by CONTRACTOR in the performance of this Agreement shall be and remain the property of AGENCY without restriction or limitation upon its use or dissemination by AGENCY. CONTRACTOR may take and retain copies of such written products as desired, but no such written products shall be the subject of a copyright application by CONTRACTOR.

B. In the performance of this Agreement, CONTRACTOR shall not discriminate against any employee, subcontractor, or applicant for employment because of race, color, creed, religion, sex, marital status, sexual orientation, national origin, ancestry, age, physical or mental disability, medical condition, or any other unlawful basis.

C. The captions appearing at the commencement of the sections hereof, and in any paragraph thereof, are descriptive only and for convenience in reference to this Agreement. Should there be any conflict between such heading, and the section or paragraph at the head of which it appears, the section or paragraph hereof, as the case may be, and not such heading, shall control and govern in the construction of this Agreement. Masculine or feminine pronouns shall be substituted for the neuter form and vice versa, and the plural shall be substituted for the singular form and vice versa, in any place or places herein in which the context requires such substitution(s).

D. The waiver by AGENCY or CONTRACTOR of any breach of any term, covenant or condition herein contained shall not be deemed to be a waiver of such term, covenant, or condition or of any subsequent breach of the same or any other term, covenant or condition herein contained. No term,

covenant or condition of this Agreement shall be deemed to have been waived by AGENCY or CONTRACTOR unless in writing.

E. Each right, power and remedy provided for herein or now or hereafter existing at law, in equity, by statute, or otherwise shall be cumulative and shall be in addition to every other right, power, or remedy provided for herein or now or hereafter existing at law, in equity, by statute, or otherwise. The exercise, the commencement of the exercise, or the forbearance of the exercise by any party of any one or more of such rights, powers or remedies shall not preclude the simultaneous or later exercise by such party of any of all of such other rights, powers, or remedies.

F. CONTRACTOR shall maintain any and all ledgers, books of account, invoices, vouchers, canceled checks, and other records or documents evidencing or relating to charges for services or expenditures and disbursements charged to AGENCY under this Agreement for a minimum of three (3) years, or for any longer period required by law, from the date of final payment to CONTRACTOR under this Agreement. All such documents shall be made available for inspection, audit, and/or copying at any time during regular business hours, upon oral or written request of AGENCY. In addition, pursuant to Government Code Section 8546.7, if the amount of public funds expended under this Agreement exceeds ten thousand dollars, all such documents and this Agreement shall be subject to the examination and audit of the State Auditor, at the request of AGENCY or as part of any audit of AGENCY, for a period of three (3) years after final payment under the Agreement.

(End of Attachment A)

(ATTACH TO EXECUTED CONTRACT AGREEMENT)

PAYMENT BOND

FY 19-20 STREET IMPROVEMENT PROJECT
PROJECT SPECIFICATION NO. 2020-01 (002001)
IN THE CITY OF SOUTH PASADENA, CALIFORNIA

WHEREAS, the City of South Pasadena, as AGENCY has awarded to _____, as CONTRACTOR, a contract for the above-stated project;

AND WHEREAS, CONTRACTOR is required to furnish a bond in connection with the contract, to secure the payment of claims of laborers, mechanics, material persons, and other persons as provided by law;

NOW THEREFORE, we, the undersigned CONTRACTOR and SURETY, are held and firmly bound unto AGENCY in the sum of _____, ($_____.____) Dollars, which is one hundred percent (100%) of the total contract amount for the above-stated project, for which payment well and truly to be made we bind ourselves, our heirs, executors and administrators, successors and assigns, jointly and severally, firmly by these presents.

THE CONDITIONS OF THIS OBLIGATION IS SUCH that if CONTRACTOR, its heirs, executors, administrators, successors, assigns or subcontractors, shall fail to pay any of the persons named in Civil Code Section 9100, or amounts due under the Unemployment Insurance Code with respect to work or labor withheld, and to pay over to the Employment Development Department from the wages of employees of the CONTRACTOR and its subcontractors pursuant to Section 13020 of the Unemployment Insurance Code, with respect to such work and labor, that the surety or sureties herein will pay for the same in an amount not exceeding the sum specified in this bond, otherwise the above obligation shall be void. In case suit is brought upon this bond, SURETY will pay reasonable attorneys' fees to the plaintiffs and AGENCY in an amount to be fixed by the court.

This bond shall inure to the benefit to any of the persons named in Civil Code Section 9100 as to give a right of action to such persons or their assigns in any suit brought upon this bond.

The SURETY hereby stipulates and agrees that no change, extension of time, alteration or addition to the terms of the contract or the specifications accompanying it shall in any manner affect SURETY's obligations on this bond. The SURETY hereby waives notice of any such change, extension, alteration or addition and hereby waives the requirements of Section 2845 of the Civil Code as a condition precedent to any remedies AGENCY may have.

(Continued on Next Page)

IN WITNESS WHEREOF the parties hereto have set their names, titles, hands, and seals as of the dates set forth below:

CONTRACTOR*	CONTRACTOR's Signer's Name, Title	_____
	CONTRACTOR's Business Name	_____
	Mailing Street Address	_____
	City, State, Zip Code	_____
	Telephone #	_____
	Date:	_____
Surety*	Surety Signer's Name / Title	_____
	Surety's Business Name	_____
	Mailing Street Address	_____
	City, State, Zip Code	_____
	Telephone #	_____
	Date:	_____

*Provide CONTRACTOR and Surety name, address and telephone number and the name, title, address and telephone number for the respective authorized representatives. Power of Attorney and Notary Acknowledgement must be attached. Seals and dates of signing must also be included.

(EXECUTE IN DUPLICATE)

CERTIFICATE OF ACKNOWLEDGMENT

A notary public or other officer completing this certificate verifies only the identity of the individual who signed the document to which this certificate is attached, and not the truthfulness, accuracy, or validity of that document.

State of California
County of _____

On _____ before me, _____,
(insert name and title of the officer)

personally appeared _____
who proved to me on the basis of satisfactory evidence to be the person(s) whose name(s) is/are subscribed to the within instrument and acknowledged to me that he/she/they executed the same in his/her/their authorized capacity(ies), and that by his/her/their signature(s) on the instrument the person(s), or the entity upon behalf of which the person(s) acted, executed the instrument.

I certify under PENALTY OF PERJURY under the laws of the State of California that the foregoing paragraph is true and correct.

WITNESS my hand and official seal.

Signature_____ (SEAL)

FAITHFUL PERFORMANCE BOND

FY 19-20 STREET IMPROVEMENT PROJECT
PROJECT SPECIFICATION NO. 2020-01 (002001)
IN THE CITY OF SOUTH PASADENA, CALIFORNIA

KNOW ALL PERSONS BY THESE PRESENTS That _____, hereinafter referred to as "CONTRACTOR" as PRINCIPAL, and _____, a corporation duly organized and doing business under and by virtue of the laws of the State of California and duly licensed for the purpose of making, guaranteeing, or becoming sole surety upon bonds or undertakings as Surety, are held and firmly bound unto the CITY OF SOUTH PASADENA, CALIFORNIA, hereinafter referred to as the "AGENCY" in the sum of _____,
($_____.____) Dollars, which is one hundred percent (100%) of the total contract amount for the above stated project; lawful money of the United States of America for the payment of which sum, well and truly to be made, we bind ourselves, our heirs, executors, administrators, assigns and successors, jointly and severally, firmly by these presents.

THE CONDITIONS OF THIS OBLIGATION ARE SUCH, that whereas CONTRACTOR has been awarded and is about to enter into a Contract with AGENCY to perform all work required pursuant to the contract documents for the project entitled: FY 19-20 STREET IMPROVEMENT PROJECT SPECIFICATION NO. 2020-01 (2001), CONTRACT which Contract is by this reference incorporated herein, and is required by AGENCY to give this Bond in connection with the execution of the Contract;

NOW, THEREFORE, if CONTRACTOR and his or her Subcontractors shall well and truly do and perform all the covenants and obligations of the Contract on his or her part to be done and performed at the times and in the manner specified herein including compliance with all Contract specifications and quality requirements, then this obligation shall be null and void, otherwise it shall be and remain in full force and effect;

PROVIDED, that any alterations in the work to be done, or in the material to be furnished, which may be made pursuant to the terms of the Contract, shall not in any way release CONTRACTOR or the Surety thereunder, nor shall any extensions of time granted under the provisions of the Contract release either CONTRACTOR or said Surety, and notice of such alterations of extensions of the Contract is hereby waived by said Surety.

In the event suit is brought upon this Bond by AGENCY and judgment is recovered, said Surety shall pay all costs incurred by AGENCY in such suit, including a reasonable attorney's fee to be fixed by the Court.

(Continued on Next Page)

IN WITNESS WHEREOF the parties hereto have set their names, titles, hands, and seals as of the dates set forth below:

CONTRACTOR*	CONTRACTOR's Signer's Name, Title	_____
	CONTRACTOR's Business Name	_____
	Mailing Street Address	_____
	City, State, Zip Code	_____
	Telephone #	_____
	Date:	_____
Surety*	Surety Signer's Name / Title	_____
	Surety's Business Name	_____
	Mailing Street Address	_____
	City, State, Zip Code	_____
	Telephone #	_____
	Date:	_____

*Provide CONTRACTOR and Surety name, address and telephone number and the name, title, address and telephone number for the respective authorized representatives. Power of Attorney and Notary Acknowledgement must be attached. Seals and dates of signing must also be included.

(EXECUTE IN DUPLICATE)

CERTIFICATE OF ACKNOWLEDGMENT

A notary public or other officer completing this certificate verifies only the identity of the individual who signed the document to which this certificate is attached, and not the truthfulness, accuracy, or validity of that document.

State of California
County of _____

On _____ before me, _____,
(insert name and title of the officer)

personally appeared _____
who proved to me on the basis of satisfactory evidence to be the person(s) whose name(s) is/are subscribed to the within instrument and acknowledged to me that he/she/they executed the same in his/her/their authorized capacity(ies), and that by his/her/their signature(s) on the instrument the person(s), or the entity upon behalf of which the person(s) acted, executed the instrument.

I certify under PENALTY OF PERJURY under the laws of the State of California that the foregoing paragraph is true and correct.

WITNESS my hand and official seal.

Signature_____ (SEAL)

MAINTENANCE BOND

FY 19-20 STREET IMPROVEMENT PROJECT
PROJECT SPECIFICATION NO. 2020-01 (002001)
IN THE CITY OF SOUTH PASADENA, CALIFORNIA

KNOW ALL PERSONS BY THESE PRESENTS THAT WHEREAS, the City of South Pasadena, as AGENCY has awarded to _____, as CONTRACTOR, a contract for the above-stated project.

AND WHEREAS, CONTRACTOR is required to furnish a bond in connection with the contract guaranteeing maintenance thereof;

NOW, THEREFORE, we, the undersigned CONTRACTOR and SURETY, are held firmly bound unto AGENCY in the sum of _____, ($_____.____) Dollars, which is fifty percent (50%) of the total contract amount for the above-stated project to be paid to AGENCY, its successors and assigns, for which payment well and truly to be made, we bind ourselves, our heirs, executors and administrators, successors and assigns, jointly and severally, firmly by these presents.

THE CONDITIONS OF THIS OBLIGATION ARE SUCH that if CONTRACTOR shall remedy without cost to AGENCY any defects which may develop during a period of one (1) year from the date of recordation of the Notice of Completion of the work performed under the contract, provided such defects are caused by defective or inferior materials or work, then this obligation shall be void; otherwise, it shall be and remain in full force and effect. In case suit is brought upon this bond, SURETY will pay reasonable attorneys' fees to the AGENCY in an amount to be fixed by the court.

IN WITNESS WHEREOF the parties hereto have set their names, titles, hands, and seals as of the dates set forth below:

CONTRACTOR*	CONTRACTOR's Signer's Name, Title	_____
	CONTRACTOR's Business Name	_____
	Mailing Street Address	_____
	City, State, Zip Code	_____
	Telephone #	_____
	Date:	_____
Surety*	Surety Signer's Name / Title	_____
	Surety's Business Name	_____
	Mailing Street Address	_____
	City, State, Zip Code	_____
	Telephone #	_____
	Date:	_____

*Provide CONTRACTOR and Surety name, address and telephone number and the name, title, address and telephone number for the respective authorized representatives. Power of Attorney and Notary Acknowledgement must be attached. Seals and dates of signing must also be included.

(EXECUTE IN DUPLICATE)

CERTIFICATE OF ACKNOWLEDGMENT

A notary public or other officer completing this certificate verifies only the identity of the individual who signed the document to which this certificate is attached, and not the truthfulness, accuracy, or validity of that document.

State of California
County of _____

On _____ before me, _____,
(insert name and title of the officer)
personally appeared _____ who proved to me on the basis of satisfactory evidence to be the person(s) whose name(s) is/are subscribed to the within instrument and acknowledged to me that he/she/they executed the same in his/her/their authorized capacity(ies), and that by his/her/their signature(s) on the instrument the person(s), or the entity upon behalf of which the person(s) acted, executed the instrument.

I certify under PENALTY OF PERJURY under the laws of the State of California that the foregoing paragraph is true and correct.

WITNESS my hand and official seal.

Signature_____ (SEAL)

WORKERS' COMPENSATION INSURANCE CERTIFICATE

The CONTRACTOR shall execute the following form as required by the California Labor Code, Sections 1860 and 1861:

> I am aware of the provisions of Section 3700 of the Labor Code which require every employer to be insured against liability for workers' compensation or to undertake self-insurance in accordance with the provisions of that code, and I will comply with such provisions before commencing the performance of the work of this contract.

Date: _____

_____
CONTRACTOR's Business Name

By:_____
(Signature)

_____
(Title)

Attest:

By:_____
(Signature)

_____
(Title)

NOTE: See Section 5.4 Insurance of the Standard Specifications for insurance carrier rating requirements.

ENDORSEMENTS TO INSURANCE POLICY

Name of Insurance Company:_____

Policy Number:_____

Effective Date:_____

The following endorsements are hereby incorporated by reference into the attached Certificate of Insurance as though fully set forth thereon:

1. The naming of an additional insured as herein provided shall not affect any recovery to which such additional insured would be entitled under this policy if not named as such additional insured, and
2. The additional insured named herein shall not be held liable for any premium or expense of any nature on this policy or any extensions thereof, and
3. The additional insured named herein shall not by reason of being so named be considered a member of any mutual insurance company for any purpose whatsoever, and
4. The provisions of the policy will not be changed, suspended, canceled or otherwise terminated as to the interest of the additional insured named herein without first giving such additional insured twenty (20) days' written notice.
5. Any other insurance held by the additional insured shall not be required to contribute anything toward any loss or expense covered by the insurance, which is referred to by this certificate.
6. **The company provided insurance for this certificate is a company licensed to do business in the State of California with rating of "A" or higher and a Financial Class VII or higher as established by A.M. Best, or higher rating established by Moody's or Standard & Poor's.**

It is agreed that the <u>City of South Pasadena, its officers and employees,</u> are included as Additional Insureds under the contracts of insurance for which the Certificate of Insurance is given.

_____
Authorized Insurance Agent

Date:_____

SECTION E – STANDARD SPECIFICATIONS

FY 19-20 STREET IMPROVEMENT PROJECT
PROJECT SPECIFICATION NO. 2020-01 (002001)
IN THE CITY OF SOUTH PASADENA, CALIFORNIA

STANDARD SPECIFICATIONS

INCORPORATION OF GREENBOOK. The 2024 edition of the Standard Specifications for Public Works Construction ("SSPWC" or "Greenbook") shall be incorporated by reference into these Standard Specifications as if fully replicated herein. These Standard Specification shall be supplemented, amended, or replaced by the Special Provision contained in Section F and G herein below. To the extent that anything in the Special Provisions conflicts with the terms or requirements of the SSPWC, the Special Provisions shall control.

SECTION F – SPECIAL PROVISIONS

FY 19-20 STREET IMPROVEMENT PROJECT
PROJECT SPECIFICATION NO. 2020-01 (002001)
IN THE CITY OF SOUTH PASADENA, CALIFORNIA

SPECIAL PROVISIONS – PART 1. The following provisions supplement, amend, or replaced the requirements of the Standard Specifications for Public Works Construction ("SSPWC" or "Greenbook"). To the extent that anything in these Special Provisions conflicts with the terms or requirements of the SSPWC, these Special Provisions shall control.

SECTION 1 - GENERAL

1-1 GENERAL. Unless otherwise stated, the words *directed, required, permitted, ordered, instructed, designated, considered necessary, prescribed, approved, acceptable, satisfactory*, or words of like meaning, refer to actions, expressions, and prerogatives of the Engineer.

1-2 TERMS AND DEFINITIONS

Acceptance – The AGENCY's formal written acceptance of a project that has been completed in all respects in accordance with the plans and specifications and any modifications thereof.

AGENCY – The City of South Pasadena.

Agent – Shall include persons and companies, other than the CONTRACTOR, retained by the City to perform design and construction services in relation to the Work.

Board – The City Council of the City of South Pasadena.

City – The City of South Pasadena, California, as the AGENCY and Owner.

City Council – City Council of the City of South Pasadena, California.

Construction Manager – Persons and/or company retained by the City to perform construction management services.

Contract Documents – Including, but not limited to: the Contract, any Addendum and Memorandum (which pertain to the contract documents), Notice Inviting Bids, Instructions to Bidders; Bid (including documentation accompanying the Bid and any post-bid documentation submitted prior to the Notice of Award) when attached as an exhibit to the Contract, the Bonds, the general conditions, permits from other agencies, the Special Provisions, the Plans, Standard Plans, Standard Specifications, Reference Specifications, and all Modifications issued after the execution of the Contract.

Days – Days shall mean consecutive calendar's days unless otherwise specified.

Design Engineer – Persons and/or company retained by the City to perform engineering design services.

Due Notice – A written notification, provided in due time, of a proposed action, where the contract requires such notification within a specified time (usually 48 hours or two working days) prior to the commencement of the contemplated action.

Engineer – The City Engineer of the City of South Pasadena, or his/her authorized representative.

Geotechnical Engineer – Person licensed to practice Soils Engineering or Geotechnical Engineering pursuant to the laws of the State of California and retained by the AGENCY during construction.

Geotextile – Synthetic fiber used in civil engineering applications, serving the primary functions of separation and filtration.

House Sewer – A sewer, wholly within private property, proposed to connect any building to a house connection sewer.

Luminaire Arm – The structural member, bracket, or mast arm, which, mounted on the standard, supports the luminaire.

Owner – City of South Pasadena, California.

Prompt – The briefest interval of time required for a considered reply, including time required for approval by a governing body.

Proposal – See Bid.

Reference Specifications – Those bulletins, standards, rules, methods of analysis or test, codes, and specifications of other agencies, engineering societies, or industrial associations referred to in the Contract Documents. These refer to the latest edition, including amendments in effect and published at the time of advertising the project or issuing the permit, unless specifically referred to by edition, volume, or date.

Standard Plans – "Standard Plans for Public Works Construction" or "SSPWC" – Latest edition of the Southern California Chapter of the American Public Works Association.

State Standard Specifications ("SSS") – Standard Specifications prepared by the State of California, Business and Transportation Agency, Department of Transportation.

State Standard Plans ("SSP") – Standard Plans prepared by State of California, Business and Transportation Agency, Department of Transportation.

Storm Drain – Any conduit and appurtenances intended for the reception and transfer of storm water.

Tonne – Also referred to as "metric ton" — Represents a unit of measure in the International System of Units equal to 1,000 kilograms.

Work – That which is proposed to be constructed or done under the Contract or permit, including the furnishing of all labor, materials, equipment, and services.

Working Days – Any days, except: (1) Saturdays, Sundays, legal holidays on which South Pasadena City Hall is closed for business; (2) days when work is suspended by the Engineer for reasons unrelated to the performance of the CONTRACTOR and provided in Subsection 6-6.1; and (3) days determined to be non-working in accordance with Section 6-3 "Time of Completion."

1-3 ABBREVIATIONS

1-3.3 Institutions. *Add the following:*
These Standard Specifications incorporate by reference the list of commonly used institution terms in the edition of the "Standard Plans for Public Works Construction" (aka the Greenbook) with the following additions:

AGCA	Associated General CONTRACTORs of America
APWA	American Public Works Association
CRSI	Concrete Reinforcing Steel Institute
CSI	Construction Specifications Institute
NFPA	National Fire Protection Association
SSS	State of California Standard Specifications, latest edition, Department of Transportation
SSP	State of California Standard Plans, latest edition, Department of Transportation.
SSPWC	Standard Specifications for Public Works Construction

1-4 UNITS OF MEASURE

1-4.1 General. *Add the following:*

When U.S. Standard Measures are not included in parenthesis, then the SI units shall control.

1-7 AWARD AND EXECUTION OF CONTRACT. *Add the following:*

1-7.0 Investigation of Site Conditions. Prior to submittal of the bid, Bidders must visit the site of work and complete their own investigations to satisfy themselves as to the existing conditions affecting the work to be done under these specifications. If the bidder chooses not to visit the site or conduct investigations, he will, nevertheless, be charged with the knowledge of conditions which reasonable inspection and investigation would have disclosed.

After the project is awarded, the CONTRACTOR shall carefully study and compare the Contract Documents with each other and with information available to the CONTRACTOR and furnished by the Owner and shall immediately notify the Engineer of errors, inconsistencies or omissions discovered. If the CONTRACTOR performs any construction activity knowing it involves a recognized error, inconsistency or omission in the Contract Documents without such notice to the Engineer, the CONTRACTOR shall assume appropriate responsibility for such performance and may assume responsibility for the full costs for correction.

The CONTRACTOR shall make field measurements and verify field conditions and shall carefully compare such field measurements and conditions and other information known to the CONTRACTOR with the Contract Documents before commencing activities. Errors, inconsistencies, or omissions discovered shall be reported to the Engineer immediately.

When existing conditions are encountered which, in the opinion of the Engineer, require temporary suspension of work for design modifications or for other determinations to be made, the CONTRACTOR shall move to other areas of work until such determinations are made at no cost to the City. No additional compensation will be allowed by reason of such temporary suspension of work, or modifications to work, except as noted in Section 3 of these Standard Specifications ("Changes in Work") for specific items of work not included in the bid. Appropriate extension of item for completion may be allowed where justification in the opinion of the Engineer.

1-7.1 General. *Add the following:*

The City reserves the right to reject any or all proposals.

The Contract will be awarded, if at all, to the lowest responsible and responsive Bidder determined as provided on the Proposal Form, whose proposal complies with all the requirements prescribed. Such award, if made, will be made within the number of days stated in the proposal form. Refusal or failure to deliver the executed contract, bonds, or insurance in the form provided in the Contract and approved by the AGENCY's attorney within the time provided herein shall be cause, at the AGENCY's option, for the annulment of the award and forfeiture of the bid security. In such event, the AGENCY may successively award the Contract to the next lowest responsible and responsive Bidder until a properly executed Contract, bonds, and insurance is obtained, or it may at any time reject all remaining bids and proceed as provided by law. The refusal or failure of a successive lowest responsible and responsive Bidder to execute the Contract may, at the AGENCY's option, result in an annulment of the award to that Bidder and the forfeiture of that Bidder's bid security. The periods of time specified above within which the award of the Contract may be made shall be subject to extension for such further period as may be agreed upon in writing between the AGENCY and the concerned Bidder.

The AGENCY reserves the right to waive any irregularities.

Within ten (10) calendar days after the date of the Notice of Award, the CONTRACTOR shall execute and return the following contract documents to the AGENCY:

Contract Agreement (in duplicate)
Faithful Performance Bond (in duplicate)
Maintenance Bond (in duplicate)
Payment Bond (in duplicate)
Public Liability and Property Damage Insurance Certificate (two originals)
Additionally Insured Endorsement
Workers' Compensation Insurance Certificate (two originals)

A corporation to which an award is made may be required, before the Contract agreement is executed by the AGENCY, to furnish evidence of its corporate existence, of its right to enter into contracts in the State of California, and that the officers signing the contract and bonds for the corporation have the authority to do so.

1-7.2 Contract Bonds. *Add the following:*

The PAYMENT BOND shall remain in force until thirty-five (35) calendar days after the date of recordation of the Notice of Completion. The FAITHFUL PERFORMANCE BOND shall remain

in force until the date of recordation of the Notice of Completion. The MAINTENANCE BOND shall remain in force until one (1) year after the date of recordation of the Notice of Completion.

All bonds must be accompanied by a Power of Attorney.

SECTION 2 - SCOPE OF THE WORK

2-1 WORK TO BE DONE. *Add the following:*

Any plan or method of work suggested by the AGENCY or the Engineer to the CONTRACTOR but not specified or required, if adopted or followed by the CONTRACTOR in whole or in part, shall be used at the risk and responsibility of the CONTRACTOR; and the AGENCY and the Engineer shall assume no responsibility therefore and in no way be held liable for any defects in the work which may result from or be caused by use of such plan or method of work.

2-3 RIGHT-OF-WAY. *Substitute the following:*

Rights-of-way, easements, or rights-of-entry for the Work will be provided by the AGENCY. Unless otherwise provided, the CONTRACTOR shall make arrangements, pay for, and assume all responsibility for acquiring, using, and disposing of additional work areas and facilities temporarily required. The CONTRACTOR shall fully defend, indemnify and hold harmless AGENCY, its authorized representatives and their representative subsidiaries, affiliates, members, director, officer, employees and agents, including parties that AGENCY contracts with (including other governmental agencies such as the California Department of Transportation) (collectively, the "Indemnitees") from and against any and all claims, actions, demands, costs, judgments, liens, penalties, liabilities, damages, losses, and expenses, including but not limited to any fees of accountants, attorneys or other professionals (collectively "Liabilities"), arising out of, in connection with these actions.

When the CONTRACTOR arranges for additional work areas and facilities temporarily required by him/her, he/she shall provide the AGENCY with proof that the additional work areas and/or facilities have been left in a condition satisfactory to the owner(s) of said work areas and/or facilities prior to acceptance of the work.

2-5 CONTRACTOR'S EQUIPMENT AND FACILITIES.

2-5.1 General. *Add the following:*

The CONTRACTOR shall furnish and maintain in good condition all equipment and facilities as required for the proper execution and inspection of the Work. Such equipment and facilities shall meet all requirements of applicable ordinances and laws.

A noise level limit of 85 dba at a distance of fifty (50) feet shall apply to all construction equipment on or related to the job, whether owned by the CONTRACTOR or not. The use of excessively loud warning signals shall be avoided except in those cases where required for the protection of personnel.

The CONTRACTOR shall arrange and maintain a secure storage site for all equipment and materials. All equipment and unused materials shall be returned to this site at the end of each workday.

SECTION 3 - CONTROL OF THE WORK

3-3 SUBCONTRACTORS. *Add the following:*

3-3.1 General. Each Bidder shall comply with the Public Contract Code including Sections 4100 through 4113. The following excerpts or summaries of some of the requirements of this Chapter are included below for information:

The Bidder shall set for the in the Bid, as provided in 4104:

> "(a) The name, and location of the place of business, the California contractor license number, and public works contractor registration number issued pursuant to Section 1725.5 of the Labor Code of each subcontractor who will perform work or labor or render service to the prime CONTRACTOR in or about the construction of the work or improvement, or a subcontractor licensed by the State of California who, under subcontract to the prime CONTRACTOR, specially fabricates and installs a portion of the work or improvement according to detailed drawings contained in the plans and specifications, in an amount in excess of one-half of 1 percent of the prime CONTRACTOR's total bid, or, in the case of bids or offers for the construction of streets or highways, including bridges, in excess of one-half of 1 percent of the prime CONTRACTOR's total bid or ten thousand dollars ($10,000), whichever is greater."
>
> "(b) The portion of the work which will be done by each such subcontractor under this act. The prime CONTRACTOR shall list only one subcontractor for each such portion as is defined by the prime CONTRACTOR in his bid."

Subcontracting of more than one-half of one percent of the work for which no Subcontractor was designated in the original Bid will be allowed only in cases of public emergency or necessity and only after the Engineer makes a written finding of circumstances constituting public emergency or necessity.

The CONTRACTOR must obtain written consent of the City to substitute a Subcontractor designated in the original Bid, to permit any subcontract to be assigned or transferred, or to otherwise allow a subcontract to be performed by anyone other than the originally designated Subcontractor.

A violation of any of the above provisions will be considered a violation of the Contract, and the City may cancel the Contract and collect appropriate damages or assess the CONTRACTOR a penalty of not more than ten (10) percent of the subcontract involved.

If subcontracted work is not being performed in a satisfactory manner, the City will notify the CONTRACTOR of the need to take corrective action and the Engineer may report the facts to the City Council. Upon order by City Council and the CONTRACTOR's receipt of written instructions from the Engineer, the Subcontractor shall immediately be removed from the Work and may not again be employed on the Work.

3-3.2 Additional Responsibility. The CONTRACTOR shall perform, with its own organization, Contract work amounting to at least 50 percent of the Contract Price except that any designated "Specialty Items" may be performed by subcontract and the amount of any such "Specialty Items" so performed may be deducted from the Contract Price before computing the amount required to be performed by the CONTRACTOR with its own organization. "Specialty Items" will be identified by the AGENCY in the Bid or Proposal. Where an entire item is subcontracted, the value

of work subcontracted will be based on the Contract Unit Price. When a portion of an item is subcontracted, the value of work subcontracted will be based on the estimated percentage of the Contract Unit Price. This will be determined from information submitted by the CONTRACTOR, and subject to approval by the Engineer.

3-3.3 Status of Subcontractors. All persons engaged in the Work, including Subcontractors and their employees, will be considered employees of the CONTRACTOR. The CONTRACTOR will be held responsible for their work. The AGENCY will deal directly and solely with the CONTRACTOR and make all payments to the CONTRACTOR.

3-4 AUTHORITY OF BOARD AND THE ENGINEER. *Substitute the following:*

The Board has the final authority in all matters affecting the Work. Within the scope of the Contract, the Engineer has the authority to enforce compliance with the Plans and Specifications. The CONTRACTOR shall promptly comply with instructions from the Engineer or an authorized representative.

The decision of the Engineer is final and binding on all questions relating to: quantities; acceptability of materials, equipment, or work; execution, progress or sequence of work; and interpretation of the Plans, Specifications, or other drawings. This shall be precedent to any payment under the Contract, unless otherwise ordered by the Board.

3-7 CONTRACT DOCUMENTS.

3-7.1 General. *Add the following:*

The CONTRACTOR shall ascertain the existence of any conditions affecting the cost of the Work through a reasonable examination of the Work site prior to submitting the Bid.

Existing improvements visible at the Work site, for which no specific disposition is made on the Plans, but which interfere with the completion of the Work, shall be removed and disposed of by the CONTRACTOR.

The CONTRACTOR shall, upon discovering any error or omission in the Plans or Specifications, immediately call it to the attention of the Engineer.

All final locations determined in the field, and any deviations from the Plans and Specification, shall be marked in red on the documents to show the as-built conditions. CONTRACTOR shall maintain a complete and accurate record of all changes of construction from that shown in these plans and specifications for the purpose of providing a basis for construction record drawings. No changes shall be made without prior written approval of the Engineer. Upon completion of the Project, CONTRACTOR shall deliver this record of all construction changes to the Engineer along with a letter which declares that other than these noted changes "the Project was constructed in conformance with the Contract Documents." Final payment will not be made until this requirement is met.

As the figured dimensions shown on the drawings and in the specifications of the Contract may not in every case agree with scaled dimensions, the figured dimensions shall be followed in preference to the scaled dimensions, and drawings to a large scale shall be followed in preference to the drawings to a small scale. Should it appear that the work to be performed, or any related matter, are not sufficiently detailed or explained in the Contract documents, the CONTRACTOR shall apply to the Engineer for such further explanations as necessary, and shall conform to such

further explanations provided by the Engineer as part of the Contract to the extent that it is consistent with the terms of the Contract.

Caution: The engineer preparing these plans will not be responsible or liable for unauthorized changes to or uses of these plans. All changes to the plans must be approved in writing by the Engineer.

(a) Records of Construction Changes / As-Builts. CONTRACTOR shall maintain a complete and accurate record of all changes of construction from that shown in these Plans and Specifications for the purpose of providing a basis for construction record drawings. No changes shall be made without prior written approval of the City Engineer.

Upon completion of the Project, CONTRACTOR shall deliver this record of all construction changes to the Engineer along with a letter which declares that other than these noted changes that Project was constructed in conformance with the Contract Documents.

Caution: The engineer preparing these Plans will not be responsible for, or liable for, unauthorized changes to or uses of these Plans. All changes to the Plans must be approved in writing by City Engineer.

3-7.2 Precedence of Contract Documents. *Substitute the following:*

If there is a conflict between any of the Contract Documents, the document highest in precedence shall control. The order of precedence, from highest to lowest, shall be as follows:

1) Permits issued by jurisdictional regulatory agencies.

2) Change Orders and/or Supplemental Agreements; whichever occurs last.

3) Contract/Agreement

4) Addenda.

5) Bid/Proposal.

6) Special Provisions.

7) Plans.

8) Notice Inviting Bids

9) Instructions to Bidders

10) Standard Plans.

11) Standard Specifications.

12) Reference Specifications.

3-10 SURVEYING. *Substitute the following:*

3-10.1 General. The CONTRACTOR will provide all necessary construction surveying, staking or markings for locating the limits of construction and shall comply with the provisions of 2-9 of these Standard Specifications. The CONTRACTOR shall bear all costs for restaking or marking.

Construction surveys shall be done only under the direction of the Engineer by a Registered (licensed) Land Surveyor or a Registered Civil Engineer authorized to practice land surveying within the state. The AGENCY will provide available record map information. The

CONTRACTOR is responsible for obtaining all necessary record maps, centerline ties and survey notes from Los Angeles County.

The CONTRACTOR and his surveyor shall provide the Engineer with a copy of the constructing staking field notes used to construct the improvements. In addition the CONTRACTOR shall also prove a plot of the improvements to be constructed based on the surveyor's construction staking and markings prior to the installation of the improvements. The plot shall be the same scale as the improvement plans.

3-10.2 Permanent Survey Markers. The CONTRACTOR shall notify the Engineer, or the owner on a Private Contract, at least 7 days before starting work to allow for the preservation of survey monuments, lot stakes (tagged), and bench marks.

The CONTRACTOR shall protect existing survey monuments, if any exist within the work limits, during the entire project. Asphalt overlaying of existing survey monuments in the roadway will not be permitted. In the event a surveyed monument lies within an area to be cold planed, removed or reconstructed, the CONTRACTOR shall immediately notify the AGENCY's representative and protect said monument until the monument is relocated.

The CONTRACTOR shall reestablish destroyed survey monuments at the CONTRACTOR's expense.

The Engineer, or the owner at its cost, shall file a Corner Record Form referencing survey monuments subject to disturbance in the Office of the County Surveyor prior to the start of construction and also prior to the completion of construction for the replacement of survey monuments. The CONTRACTOR shall not disturb survey monuments, lot stakes (tagged), or bench marks without the consent of the Engineer or the owner on Private Contracts. The CONTRACTOR shall bear the expense of replacing any that may be disturbed without permission. Replacement shall be done only under the direction of the Engineer by Registered (licensed) Licensed Land Surveyor or a Registered Civil Engineer authorized to practice land surveying within the state.

When a change is made in the finished elevation of the pavement of any roadway in which a permanent survey monument is located, the CONTRACTOR shall adjust the monument cover to the new grade within 7 days of finished paving unless otherwise specified.

3-10.3 Line and Grade. The CONTRACTOR shall be responsible for all survey and layout of work.

The line and grades for construction will be parallel to and offset from the position of the work. From the established lines and grades, the CONTRACTOR shall extend the necessary lines and grades for construction of the work and shall be responsible for the correctness of same.

All work shall conform to the lines, elevations, and grades shown on the Plans.

Three consecutive points set on the same slope shall be used together so that any variation from a straight grade can be detected. Any such variation shall be reported to the Engineer. In the absence of such report, the CONTRACTOR shall be responsible for any error in the grade of the finished work.

Grades for underground conduits will be set at the surface of the ground. The CONTRACTOR shall transfer them to the bottom of the trench.

3-10.4 Survey Service. The Engineer will oversee surveying adequate for construction. The CONTRACTOR shall preserve construction survey stakes and marks for the duration of their usefulness. If any construction survey stakes are lost or disturbed and need to be replaced, such replacement shall be by the CONTRACTOR at his expense.

The CONTRACTOR shall notify the Engineer in writing at least 2 working days before survey services take place for the laying out of any portion of the Work. The CONTRACTOR shall dig all holes necessary for line and grade stakes.

Unless otherwise specified, stakes will be set and stationed by the CONTRACTOR for curbs, headers, sewers, storm drains, structures, and rough grade. A corresponding cut or fill to finished grade (or flowline) will be indicated on a grade sheet.

3-10.4 Payment. Payment for **CONSTRUCTION SURVEYING** shall be at the contract LUMP SUM (LS) price bid, and shall include full compensation for all labor, materials, tools, equipment and incidentals necessary to do all the work involved thereof, complete, in place, and accepted. Payment for construction surveying, construction staking, resetting of survey tags and monuments, professional services, office calculations, preparation and filing of corner records before and after construction, county fees, monuments, swing ties, certification letters, furnishing all labor, materials, tools, equipment, and incidentals, and for doing all the work involved shall be considered as included in the contract LUMP SUM (LS) price bid for Construction Surveying, and no additional compensation will be allowed.

3-12 WORK SITE MAINTENANCE

3-12.1 General. *Add the following:*

The CONTRACTOR shall also abate dust nuisance by cleaning, sweeping and sprinkling with water, or other means as necessary. The use of water resulting in mud on public streets will not be permitted as a substitute for sweeping or other methods.

Materials and equipment shall be removed from the site as soon as they are no longer necessary. Before the final inspection, the site shall be cleared of equipment, unused materials, and rubbish so as to present a satisfactory clean and neat appearance. All cleanup costs shall be included in the CONTRACTOR's Bid.

Excess excavated material from catch basins or similar structures shall be removed from the site immediately. Sufficient material may remain for use as backfill if permitted by the Specifications. Forms and form lumber shall be removed from the site as soon as practicable after stripping.

3-12.1.1 Vermin Control. *Add the following:*

At the time of acceptance, structures entirely constructed under the Contract shall be free of rodents, insects, vermin, and pests. Necessary extermination work shall be arranged and paid for by the CONTRACTOR as part of the Work within the Contract time, and shall be performed by a licensed exterminator in accordance with requirements of governing authorities. The CONTRACTOR shall be liable for injury to persons or property and responsible for the elimination of offensive odors resulting from extermination operations.

3-12.3 Noise Control. *Add the following:*

CONTRACTOR shall adhere to City noise restrictions at all times. Pursuant to Chapter 19A.13 of the South Pasadena Municipal Code, construction activity is prohibited within a residential zone or within 500 feet thereof on Monday through Friday before 8:00 a.m. and after 7:00 p.m., Saturday before 9:00 a.m. and after 7:00 p.m., and on Sundays and City recognized holidays before 10:00 a.m. and after 6:00 p.m.

3-12.6.3 Storm Water Pollution Prevention Plan (SWPPP). *Add the following:*

CONTRACTOR shall submit to the engineer a completed and signed SWPPP one week prior to the preconstruction meeting. The plan may utilize the practices recommended in the latest edition of the *California Storm Water Best Management Practices Handbook*, available from California Stormwater Quality Association (CSQA), and online at http://www.cabmphandbooks.net/ . The plan shall be consistent with the construction General Permit, issued by the State Water Resources, Control Board, through submittal of the Notice of Intent (NOI).

If construction will occur between October 15 and April 15 (considered as the rainy season per the City of South Pasadena), a wet weather erosion control plan must be submitted. Additionally, Best Management Practices (BMPs) implemented during the AGENCY's rainy season shall include but not be limited to those appropriate for wet weather conditions.

(a) Storm Water Pollution Prevention Measures. All storm water pollution prevention measures shall be in accordance with the submitted SWPPP. In the event circumstances during the course of construction require changes to the original SWPPP, a revised plan shall be promptly submitted to the AGENCY's representative in each instance. No responsibility shall accrue to the AGENCY as a result of the plan or as a result of knowledge of the plan. All work installed by the CONTRACTOR in connection with the SWPPP but not specified to become a permanent part of the project shall be removed and the site restored in so far as practical to its original condition prior to completion of construction or when directed by the AGENCY's representative.

(b) Storm Water Pollution Prevention – Measurement And Payment. Unless otherwise indicated in the Special Provisions, measurement and payment for Storm Water Pollution Prevention Measures, as described herein, shall be included in the items of Work requiring storm water pollution prevention measures as indicated in the project Special Provisions. Such payment shall be considered full compensation for all labor, materials, tools, and equipment for completion, and implementation and compliance with the SWPPP.

This item shall also include the installation, maintenance and removal of any necessary BMPs for SWPPP purposes throughout the duration of the project.

3-13 COMPLETION, ACCEPTANCE, AND WARRANTY.

3-13.1 Completion. Add the following:

The Work will be inspected by the Engineer for acceptance upon receipt of the CONTRACTOR's written assertion that the Work has been completed.

3-13.3 Warranty. *Add the following:*

All work shall be warranted by the CONTRACTOR against defective workmanship and materials for a period of 1 year from the date the Work was completed. The CONTRACTOR shall replace

or repair any such defective work in a manner satisfactory to the Engineer, after notice to do so from the Engineer, and within the time specified in the notice. If the CONTRACTOR fails to make such replacement or repairs within the time specified in the notice, the AGENCY may perform this work and the CONTRACTOR's sureties shall be liable for the cost thereof.

SECTION 4 - CONTROL OF MATERIALS

4-1 GENERAL. *Add the following:*

Used or secondhand materials, parts, and equipment may be used only if permitted by the Specifications.

The CONTRACTOR and all subcontractors, suppliers, and vendors shall guarantee that the entire Work will meet all requirements of this Contract as to the quality of materials, equipment, and workmanship. The CONTRACTOR, at no cost to the AGENCY, shall make any repairs or replacements made necessary by defects in materials, equipment, or workmanship that become evident within one year after the date of recordation of the Notice of Completion. Within this one-year period, the CONTRACTOR shall also restore to full compliance with the requirements of this Contract any portion of the Work which is found not to meet those requirements. The CONTRACTOR shall defend, indemnify, and hold the AGENCY, its officers, agents, and employees harmless from claims of any kind due to injuries or damages arising, directly or indirectly, from said defects or noncompliance.

The CONTRACTOR shall make all repairs, replacements, and restorations within thirty-five (35) days after the date of the Engineers' written notice.

If, in the opinion of the Engineer, the defective work is not of sufficient magnitude or importance to make the work dangerous or undesirable, or if, in the opinion of the Engineer, the removal of such work is impractical or will create conditions which are dangerous or undesirable, the AGENCY shall have the right and authority to retain such work instead of requiring it to be removed and reconstructed, but will make such deductions thereof in the payments due or to become due to the CONTRACTOR as the AGENCY may deem just and reasonable.

4-2 PROTECTION. *Add the following:*

The CONTRACTOR shall be responsible for the protection of public and private property adjacent to the Work and shall exercise due caution to avoid damage to such property.

The CONTRACTOR shall relocate, repair, replace or reestablish all existing improvements within the project limits (e.g., curbs, sidewalks, catch basins, catch basin screens, driveways, fences, walls, sprinkler systems, signs, utility installations, pavements, structures, survey monuments, landscaping, etc.) that are damaged or removed as a result of the CONTRACTOR's operations or as required by the plans and specifications.

All existing improvements, either within the right-of-way or not, including irrigation lines that are damaged by actions of the CONTRACTOR, shall be restored by the CONTRACTOR to their original or better condition at the CONTRACTOR's expense.

The CONTRACTOR shall mark, as approved by the Engineer, all survey monuments, manholes, valves, substructures, or other items that are visible on the surface and will be covered by his

operations. This shall be completed prior to the start of that operation and approved by the Engineer.

Existing traffic striping, pavement markings, and curb markings shall also be considered as existing improvements and the CONTRACTOR shall repaint or replace, at the CONTRACTOR's expense, such striping or markings (except for traffic striping and pavement markings within the limits of the Work) if damaged or if their reflectivity is reduced due to construction operations.

All restoration of existing improvements must occur within the construction completion date, unless directed otherwise by the City Engineer.

Maintenance of street and traffic signal systems that are damaged, temporarily removed or relocated shall be done in conformance with the Contract Documents.

Trees, lawns, and shrubbery that are not to be removed shall be protected from damage or injury. If damaged or removed due to CONTRACTOR's operations, they shall be restored or replaced in as nearly the original condition and location as is reasonably possible. Lawns shall be reseeded and covered with suitable mulch.

The CONTRACTOR shall give reasonable notice to occupants or owners of adjacent property to permit them to salvage or relocate plants, trees, fences, sprinklers, and other improvements, within the right-of-way which are designated for removal and would be destroyed because of the Work.

All costs to the CONTRACTOR for protecting, removing, restoring, relocating, repairing, replacing, or reestablishing existing improvements shall be the responsibility of the CONTRACTOR.

4-6 TRADE NAMES. *Add the following:*

Along with information supplied by the CONTRACTOR regarding equivalency of the proposed item, the CONTRACTOR shall clearly identify all deviations from the specified item. Deviations discovered by the Engineer after acceptance of an "or equal" item which were not identified by the CONTRACTOR with his/her submittal shall be cause for rejection of the "or equal" item. CONTRACTOR shall be due no additional compensation in time or money for acceptance or rejection of a proposed "or equal" item and subsequent replacement with the item specified. CONTRACTOR shall pay cost to AGENCY for items requiring more than two submittals and analysis of any shop drawing which requires more than a general review of an "or equal" item.

Add the following Section 4-9:

4-9 CONSTRUCTION MATERIALS DISPUTE RESOLUTION (Soils, Rock Materials, Concrete, Mortar and Related Materials, Masonry Materials, Bituminous Materials, Rock Products, and Modified Asphalts). In the interest of safety and public value, whenever credible evidence arises to contradict the test values of materials, the AGENCY and the CONTRACTOR will initiate, an immediate and cooperative investigation. Test values of materials are results of the materials' tests, as defined by these Specifications or by the special provisions, required to accept the Work. Credible evidence is process observations or test values gathered using industry accepted practices. A contradiction exists whenever work acceptance or performance becomes suspect. The investigation shall allow access to all test results, procedures, and facilities relevant to the disputed work and consider all available information and, when necessary, gather new and additional information to determine the validity, the cause, and if necessary, the remedy to the contradiction. If the cooperative investigation reaches any resolution mechanism acceptable to

both the AGENCY and the CONTRACTOR, the contradiction shall be considered resolved and the cooperative investigation concluded.

Whenever the cooperative investigation is unable to reach resolution, the investigation may then either conclude without resolution or continue by written notification of one party to the other requesting the implementation of a resolution process by committee. The continuance of the investigation shall be contingent upon recipient's agreement and acknowledged in writing within 3 calendar days after receiving a request. Without acknowledgement, the investigation shall conclude without resolution. The committee shall consist of three State of California Registered Civil Engineers. Within 7 calendar days after the written request notification, the AGENCY and the CONTRACTOR will each select one engineer. Within 14 calendar days of the written request notification, the two selected engineers will select a third engineer. The goal in selection of the third member is to complement the professional experience of the first two engineers. Should the two engineers fail to select the third engineer, the AGENCY and the CONTRACTOR shall each propose 2 engineers to be the third member within 21 calendar days after the written request notification. The first two engineers previously selected shall then select one of the court proposed engineers in a blind draw.

The committee shall be a continuance of the cooperative investigation and will re-consider all available information and if necessary, gather new and additional information to determine the validity, the cause, and if necessary, the remedy to the contradiction. The committee will focus upon the performance adequacy of the material(s) using standard engineering principles and practices and to ensure public value, the committee may provide engineering recommendations as necessary. Unless otherwise agreed, the committee will have 30 calendar days from its formation to complete their review and submit their findings. The final resolution of the committee shall be by majority opinion, in writing, stamped and signed. Should the final resolution not be unanimous, the dissenter may attach a written, stamped, and signed minority opinion.

Once started, the resolution process by committee shall continue to full conclusion unless:

1. Within 7 days of the formation of the committee, the AGENCY and the CONTRACTOR reach an acceptable resolution mechanism; or
2. Within 14 days of the formation of the committee, the initiating party withdraws its written notification and agrees to bear all investigative related costs thus far incurred; or
3. At any point by the mutual agreement of the AGENCY and the CONTRACTOR.

Unless otherwise agreed, the CONTRACTOR shall bear and maintain a record for all the investigative costs until resolution. Should the investigation discover assignable causes for the contradiction, the assignable party, the AGENCY or the CONTRACTOR, shall bear all costs associated with the investigation. Should assignable causes for the contradiction extended to both parties, the investigation will assign costs cooperatively with each party or when necessary, equally. Should the investigation substantiate a contradiction without assignable cause, the investigation will assign costs cooperatively with each party or when necessary, equally. Should the investigation be unable to substantiate a contradiction, the initiator of the investigation shall bear all investigative costs. All claim notification requirements of the contract pertaining to the contradiction shall be suspended until the investigation is concluded.

SECTION 5 - LEGAL RELATIONS AND RESPONSIBILITIES

5-2 SPECIAL NOTICES. *Add the following:*

5-2.1 Mandatory Notification Prior To Excavation. The CONTRACTOR's attention is direct to Section 4215.5 through 4217 of the Government Code of the State of California. This requires that two (2) working days prior to commencing any excavation "Underground Service Alert of Southern California" (USA) ("Digalert") shall be notified by phone, toll free 1-800-422-4133, or 811, for the assignment of an Inquiry Identification Number.

CONTRACTOR shall contact all utility companies at least five (5) working days prior to commencing work and shall verify the location of any known utilities and determine whether or not a representative of each company will be present during excavation.

The known public utilities contacts are:

1.	City of South Pasadena, Public Works Inspection	(626) 403-7240
2.	AT&T	(626) 365-5733
3.	Southern California Edison	(714) 796-9932
4.	Southern California Gas Company	(714) 634-3079
5.	South Pasadena Water Department	(626) 403-7337
6.	Spectrum	(818) 407-3152
7.	South Pasadena Sewer Department	(626) 403-7370
8.	Athens Services	(888) 336-6100

The CONTRACTOR shall coordinate construction with public utility relocation activities.

The existing subsurface utilities shown have been indicated, based on the best available record information. However, to avoid or resolve any interference problems between these existing utilities and the proposed work, the CONTRACTOR shall field verify the vertical and horizontal locations of all utilities, such as water lines and water services, electronic conduits, telephone and television cable, storm drain facilities, and all other facilities and obstructions prior to beginning any excavations. If conflicts exist, revised grades and/or alignments may be established, if required. **Such field verification shall require exposing these utilities prior to the start of construction**.

Special reference is hereby made to Section 4-2, "Protection," of the Standard Specifications with respect to the protection, repair, and replacement of existing subsurface utilities.

Additionally, the CONTRACTOR shall also notify the following local entities of his/her schedule fourteen (14) days prior to commencing work, including local refuse collectors, street sweepers, the Post Office, Public Schools, and Bus Companies:

City of South Pasadena Attn: H. Ted Gerber, Public Works Director	(626) 403-7240
City of South Pasadena Attn: Anteneh Tesfaye, Deputy Public Works Director	(626) 403-7378
City of South Pasadena, Public Works Engineering Division Attn: Michael Vartanians, Principal Engineer	(626) 403-7245
City of South Pasadena, Public Works Water Division Attn: Victor Magana, Water Operations Manager	(626) 403-7396
City of South Pasadena, Public Works Operation Division Attn: Catrina Peguero, Operations Manager	(626) 403-7376
City of South Pasadena Attn: Eddie Munoz, Streets Supervisor	(626) 403-7375
Metropolitan Water District Attn: Kevin Johansen, Water Systems Operations Group	(526) 713-0348
AT&T Communications OSP Engineering	(626) 570-5454
Los Angeles County Sanitation Districts Attn: Doug Walton	(310) 638-1161
Los Angeles County Public Works Department Construction Division Attn: Angela George	(626) 458-3109
Los Angeles County Public Works Department Traffic & Lighting Division Attn: Guita Shiek Atten: Robery Gysel	 (626) 458-5905 (626) 458-3122
SBC Attn: Jack Wilson	(626) 373-5960
Southern California Edison Attn: Eddie Lopez	(626) 303-8405
Southern California Gas Company	(714) 634-3079
Spectrum	(818) 407-3152

Underground Service Alert (Dig Alert) (800) 422-4133

No excavation shall commence unless the CONTRACTOR has obtained the USA Inquiry Identification Number.

5-1.2 Accuracy of Utilities Information. The locations of known existing major utilities, whether above ground or underground, are indicated on the plans. Information and data reflected in the Contract Documents with respect to underground and above ground utilities at or contiguous to the site is based upon information and data furnished to the City and the Engineer by the owners of such utilities, and the City does not assume responsibility for the accuracy or completeness thereof. The CONTRACTOR shall take all possible precautions for the protection of unforeseen utility lines to provide for uninterrupted service and to provide such special protection as may be necessary.

The CONTRACTOR shall be responsible for determining the location and depth of all underground facilities, including service connections, which may affect or be affected by his/her operations, and he/she shall include the cost to pothole all utilities within the limits of work in his/her bid. If an existing utility line, which has been marked by Underground Service Alert or is shown on the plans, is damaged by the CONTRACTOR, the CONTRACTOR shall repair the line and bear the cost thereof.

CONTRACTOR shall be aware that electrical conduits between street and traffic lights may exist beneath pavement and/or sidewalk in areas where such lights are in place and that said conduits are not shown on these plans.

In the event that the CONTRACTOR damages any existing utility lines that are not shown, shown incorrectly or the locations of which are not made known to the CONTRACTOR prior to excavation, a telephone call and written report shall be made immediately to the Utility owner, the Engineer, and to the City. If directed by the City, the CONTRACTOR shall make repairs under the provisions for changes and extra work contained in **2-7 CHANGES INITIATED BY THE AGENCY** of the Standard Specifications.

5-4 INSURANCE.

5-4.1 General. *Add The following:*

CONTRACTOR and AGENCY agree that AGENCY, its employees, agents and officials should, to the extent permitted by law, be fully protected from any loss, injury, damage, claim, lawsuit, cost, expense, attorneys fees, litigation costs, defense costs, court costs or any other cost arising out of or in any way related to the performance of this Agreement, which includes but is not limited to, contracts with other governmental agencies such as the California Department of Transportation, which are necessary for the AGENCY to enact this Agreement or from contracts with other parties or governmental agencies, which are necessary for the AGENCY to enact this Agreement.

CONTRACTOR acknowledges that its obligation pursuant to this section extends to liability attributable to AGENCY, if that liability is less than the sole fault of AGENCY. CONTRACTOR has no obligation under this Agreement for liability proven in a court of competent jurisdiction or by written agreement between the parties to be the sole fault of AGENCY.

The obligations of CONTRACTOR under this or any other provision of this Agreement will not be limited by the provisions of any workers compensation act or similar act. CONTRACTOR expressly waives its statutory immunity under such statutes or laws as to AGENCY, its employees, agents and officials.

CONTRACTOR agrees to obtain executed indemnity agreements with provisions identical to those as set forth here in this section from each and every subcontractor, sub-tier CONTRACTOR or any other person or entity involved by, for, with or on behalf of CONTRACTOR in the performance or subject matter of this Agreement. In the event CONTRACTOR fails to obtain such indemnity obligations from others as required here, CONTRACTOR agrees to be fully responsible according to the terms of this section.

Failure of AGENCY to monitor compliance with these requirements imposes no additional obligations on AGENCY and will in no way act as a waiver of any rights hereunder. This obligation to indemnify and defend AGENCY as set forth herein is binding on the successors, assigns or heirs of CONTRACTOR and shall survive the termination of this Agreement or this section.

CONTRACTOR agrees to provide insurance in accordance with the requirements as set forth here. If CONTRACTOR uses existing coverage to comply with these requirements and that coverage does not meet the requirements set forth herein, CONTRACTOR agrees to amend, supplement, or endorse the existing coverage to do so. The following coverages will be provided by CONTRACTOR and maintained on behalf of AGENCY and in accordance with the requirements set forth herein:

General Liability:

- General Aggregate: $4,000,000
- Products Comp/Op Aggregate $4,000,000
- Personal & Advertising Injury $2,000,000
- Each Occurrence $2,000,000
- Fire Damage (any one fire) $ 100,000
- Medical Expense (any 1 person) $ 10,000

Workers' Compensation:

- Workers' Compensation Statutory Limits
- EL Each Accident $1,000,000
- EL Disease - Policy Limit $1,000,000
- EL Disease - Each Employee $1,000,000

Automobile Liability

- Any vehicle, combined single limit $1,000,000

SECTION 6 - PROSECUTION AND PROGRESS OF THE WORK

6-1 CONSTRUCTION SCHEDULE AND COMMENCEMENT OF WORK. *Add the following:*

6-1.3 Pre-Construction Meeting and Submittal. A pre-construction meeting will be conducted by the City prior to commencement of construction at a time and place designated by the City. Those attending the meeting shall include, but not be limited to, the following:

a. The CONTRACTORs representative(s)

b. Sub-CONTRACTORs representative(s), if needed

c. City of South Pasadena Director of Public Works

d. The Design Engineers

e. The Construction Engineers

f. The affected utility companies' representatives

g. City of South Pasadena Public Works Inspectors

h. Caltrans' inspector and/or representative(s)

One week prior to this meeting the CONTRACTOR shall submit the following:

1. Construction Schedule
2. Traffic Control Plan
3. Emergency Contact List
4. List of Subcontractors
5. Storm Water Pollution Prevention Plan (SWPPP)

6-1.4 Emergency Contact List. The CONTRACTOR shall provide the following information in writing and submit it with the signed contract, contract bonds and certificates of insurance. Failure to comply may result in delays in the processing of the contract documents.

1. Name of authorized representative at the job site.
2. Address and telephone number where the above person can be reached 24 hours a day.
3. Address of the nearest office of the CONTRACTOR, if any, and the name and telephone number of a person at that office who is familiar with the project.
4. Address and telephone number of the CONTRACTOR's main office and the name and telephone number of the person at that office familiar with the project.

6-2 PROSECUTION OF WORK. *Add the following:*

As soon as possible under the provisions of the Specifications, the CONTRACTOR shall backfill all excavations and restore to usefulness all improvements existing prior to the start of the Work.

The CONTRACTOR shall submit monthly progress reports to the Engineer by the tenth day of each month. The report shall include an updated construction schedule. Any deviations from the original schedule shall be explained.

6-2.1 Traffic and Access. The CONTRACTOR's operations shall cause no unnecessary inconvenience. The access rights of the public shall be considered at all times. Unless otherwise authorized, traffic shall be permitted to pass through the Work, or an approved detour shall be provided.

Safe and adequate pedestrian and vehicular access shall be provided and maintained to: fire hydrants; commercial and industrial establishments; churches, schools and parking lots; service stations and motels; hospitals; police and fire stations; and establishments of similar nature. Access to these facilities shall be continuous and unobstructed unless otherwise approved by the Engineer.

Safe and adequate pedestrian zones and public transportation stops, as well as pedestrian crossings of the Work at intervals not exceeding 90 m (300 feet), shall be maintained unless otherwise approved by the Engineer.

Vehicular access to residential driveways shall be maintained to the property lien except when necessary construction precludes such access for reasonable periods of time. If backfill has been completed to the extent that safe access may be provided, and the street is opened to local traffic, the CONTRACTOR shall immediately clear the street and driveways and provide and maintain access.

The CONTRACTOR shall cooperate with the various parties involved in the delivery of mail and the collection and removal of trash and garbage to maintain existing schedules for these services.

Grading operations, roadway excavation and fill construction shall be conducted by the CONTRACTOR in a manner to provide a reasonably satisfactory surface for traffic. When rough grading is completed, the roadbed surface shall be brought to a smooth, even condition satisfactory for traffic.

Unless otherwise authorized, work shall be performed in only one-half of the roadway at one time. One half shall be kept open and unobstructed until the opposite side is ready for use. If one-half a street only is being improved, the other half shall be conditioned and maintained as a detour.

The CONTRACTOR will be required to maintain at least one lane of traffic in each direction through the project area at all times in a manner satisfactory to the Engineer in the form of an engineered traffic control plan. The engineered traffic control plans must be signed by a California registered civil and/or traffic engineer. The plan is a required submittal for review one week prior to the pre-construction meeting.

If traffic control on the project shall be implemented by a sub-contractor, such subcontractor must specialize in Traffic Control and be approved by the City Engineer.

The CONTRACTOR shall include in its Bid all costs for the above requirements.

6-2.1.1 Notification to the Public. Affected properties will be determined by the Engineer and are, in general, those properties that fall within 500 feet of the limits of the work. CONTRACTOR shall remain aware of all adjacent property owners and take all steps necessary to minimize

construction impacts and disturbances to all affected property owners. The CONTRACTOR is required to distribute the approved public notice to property owners one week prior to roadway construction. CONTRACTOR shall be responsible for all costs associated with these tasks and responsibilities in the various contract bid items.

The CONTRACTOR is required to notify the City by e-mail that public notices have been distributed. The e-mail shall be addressed to the City representative(s) designated during the pre-construction meeting. The e-mail shall be sent to the City no later than 8 a.m. on the day following distribution of the notices. The e-mail notification to the City shall contain a map showing the limits of distribution and the dates and times distributed. A separate e-mail shall be sent for each distribution. The City will use the information on the e-mails to verify that the distribution has been performed. If the distribution is not verified by the City, the City will e-mail to the CONTRACTOR's representative the locations which must be redistributed with the new information. The CONTRACTOR shall not perform work in the distribution area without e-mail notification of verification by the City of the distribution.

The CONTRACTOR shall submit a sample of a public notice for review and approval by the Engineer. The CONTRACTOR shall provide changes as directed by the City representative and submit final draft for approval.

The CONTRACTOR shall furnish and place "No Parking" signs, 12"x18" minimum size, approved by the Engineer, along the street in front of every residence and/or business affected by the work, two (2) working days in advance of any work. In rural areas, the signs shall be placed at a spacing not exceeding 400 feet. The signs shall include the day and time during which parking is prohibited. Parking restrictions shall be limited to the intervals between 8 a.m. to 5 p.m. to allow parking during the night. The CONTRACTOR shall remove these signs immediately when they are no longer needed.

If the work is delayed or rescheduled for any reason after placement of "No Parking" signs, the CONTRACTOR shall re-date the signs affected and re-notify the residents and businesses of the change via a new "door-knob" notice. If the work is delayed more than five days, the CONTRACTOR shall remove the signs and place re-dated signs two (2) days in advance of the work.

6-2.1.2 Notification to the Public Agencies. The CONTRACTOR shall notify the following Agencies 48 hours prior to working in the area within the City of Pasadena unless otherwise noted:

City of South Pasadena Attn: H. Ted Gerber, Public Works Director	(626) 403-7240
City of South Pasadena Attn: Anteneh Tesfaye, Deputy Public Works Director	(626) 460-6393
City of South Pasadena, Public Works Water Division Attn: Victor Magana, Water Operations Manager	(213) 440-3543
City of South Pasadena, Public Works Operation Division Attn: Catrina Peguero, Operations Manager	(626) 403-7376
City of South Pasadena Attn: Eddie Munoz, Streets Supervisor	(626) 403-7375
Metropolitan Water District Attn: Kevin Johansen, Water Systems Operations Group	(526) 713-0348
AT&T Communications OSP Engineering	(626) 570-5454
Los Angeles County Sanitation Districts Attn: Doug Walton	(310) 638-1161
Los Angeles County Public Works Department Construction Division Attn: Angela George	(626) 458-3109
Los Angeles County Public Works Department Traffic & Lighting Division Attn: Guita Shiek Atten: Robery Gysel	 (626) 458-5905 (626) 458-3122
SBC Attn: Jack Wilson	(626) 373-5960
Southern California Edison Attn: Eddie Lopez	(626) 303-8405
Southern California Gas Company	(714) 634-3079
Spectrum	(818) 407-3152
Underground Service Alert (Dig Alert)	(800) 422-4133

6-2.1.3 Parking Restrictions and Posting for Tow Away. No Parking signs, posted by the CONTRACTOR, shall be of heavy card stock and not less than 1.75 square feet of surface area on the face. Background color shall be white and letters shall be printed in red water resistant ink except day, date, and time of restriction may be printed in black water resistant ink. The signs shall be printed with the words "Tow Away" and "No Parking" with a character height of not less than 2.75 inches and a stroke width of not less than 0.5 inches. The day, dated, and time of the particular restriction shall be printed or attached below the above-mentioned wording in characters of not less than 2.0 inches in height and 0.4 inches in stroke width. The day of the week shall be written out or properly abbreviated with three to four letters; date or dates or restriction shall be listed completely; the beginning and ending times shall be clearly listed on the sign.

Signs shall be mounted such that the wording "No Parking" are at an elevation at least three feet above the adjacent flowline. Signs may be tied with string to trees and power poles, taped to existing sign poles, or mounted to stakes or barricades as provided by the CONTRACTOR. The signs shall be placed as needed to control the parking of cars within the construction zone; signs shall be placed at intervals of 75 feet or less along each side of the roadway.

Signs shall be posted and maintained by the CONTRACTOR for a period of 72 hours prior to the restrictions becoming effective. The CONTRACTOR may only post parking restrictions that are effective for the duration of the Work. Upon completion of the Work, the CONTRACTOR shall promptly and completely remove and dispose all signs, stakes, and barricades. The CONTRACTOR shall promptly reset or replace all damaged or defective signs.

The CONTRACTOR shall be fully responsible for the adequate removal of all parked cars. The CONTRACTOR shall coordinate the removal of all vehicles with the Sheriff Department. The CONTRACTOR shall notify the Sheriff Communications Center upon posting of the parking restrictions for a particular street. For removal of parked vehicles, the CONTRACTOR shall notify the Sheriff Communications Center not less than two hours prior to the needed removal, stating the address nearest the parked vehicle, make, model, color and license number. The City shall not be responsible for any delay or additional costs associated with the removal of parked cars that obstruct the construction operation.

If a vehicle owner successfully contests a towing citation in court, and their citation is dismissed for causes related to the CONTRACTOR's failure to perform the requirements of this section, the CONTRACTOR shall reimburse the City for the cost of any claims associated with the towing citation.

DEVIATIONS FROM THE REQUIREMENTS OF THIS SUBSECTION WILL BE PERMITTED ONLY ON PRIOR CONSENT OF THE ENGINEER.

6-2.1.4 Storage of Equipment and Materials in Public Streets. Construction materials shall not be stored in streets, roads, or highways for more than 5 days after unloading. All materials or equipment not installed or used in construction within 5 days after unloading shall be stored elsewhere by the CONTRACTOR at its expense unless authorized additional storage time.

Construction equipment shall not be stored at the Work site before its actual use on the Work nor for more than 5 days after it is no longer needed. Time necessary for repair or assembly of equipment may be authorized by the Engineer.

Excavated material, except that which is to be used as backfill in the adjacent trench, shall not be stored in public streets unless otherwise permitted. After placing backfill, all excess material shall be removed immediately from the site.

6-2.1.5 Street Closures, Detours, Barricades. The CONTRACTOR shall comply with all applicable State, County and City requirements for closure of streets. The CONTRACTOR shall provide barriers, guards, lights, signs, temporary bridges, flag persons, and watchpersons. The CONTRACTOR shall be responsible for compliance with additional public safety requirements which may arise. The CONTRACTOR shall furnish and install signs and warning devices and promptly remove them upon completion of the Work.

At least 48 hours in advance of closing, partially closing or reopening, any street, alley, or other public thoroughfare, the CONTRACTOR shall notify the Police, Fire, Traffic and Engineering Departments, and comply with their requirements. Deviations must first be approved in writing by the Engineer.

The CONTRACTOR shall secure approval, in advance, from authorities concerned for the use of any bridges proposed by it for public use. Temporary bridges shall be clearly posted as to load limit, with signs and posting conforming to current requirements covering "signs" as set forth in the Traffic Manual published by the California Department of Transportation. This manual shall also apply to the street closures, barricades, detours, lights, and other safety devices required.

All traffic control barricades, signs and devices used by the CONTRACTOR shall, as a minimum, conform to the latest edition of the "California Manual on Uniform Traffic Controls Devices" ("MUTCD"). Channelization devices shall be spaced no greater than fifty (50) feet apart. The CONTRACTOR shall take additional precautions as he/she may find necessary under the circumstances.

Should the CONTRACTOR fail to provide adequate traffic control or safety barricades, and in the event a responsible individual cannot be located or refuses to perform, the AGENCY will at its option place needed devices or engage a private firm to place and maintain said barricades, which will be charged to the CONTRACTOR directly.

Full street closures will not be allowed without City Council approval.

All costs involved in the CONTRACTOR'S prosecution of the Work shall be included in the Bid.

6-2.2 Daily Reports. The CONTRACTOR shall complete a Daily Report indicating manpower, work performed, major equipment used and on standby (itemized separately), subcontractors, and similar items involved in the performance of the Work. The Daily Report shall be completed on forms prepared by the CONTRACTOR and acceptable to the Engineer and shall be submitted to the City Inspector weekly.

6-3 TIME OF COMPLETION

6-3.1 General. *Add the following:*

The CONTRACTOR shall complete the Work within the time specified in B1.03 CONTRACT PERIOD/CONSTRUCTION COMPLETION DATE, or as modified by Change Order or agreement, after the Notice to Proceed.

Add the following:

6-3.3 Working Day. A working day is any day within the period between the start of the Contract time as defined in 6-1.2 and the date provided for completion, or upon field acceptance by the Engineer for all work provided for in the Contract, whichever occurs first, other than:

1. Saturday,
2. Sunday,
3. any day designated as a holiday by the AGENCY,
4. any other day designated as a holiday in a Master Labor Agreement entered into by the CONTRACTOR or on behalf of the CONTRACTOR as an eligible member of a CONTRACTOR association,
5. any day the CONTRACTOR is prevented from working at the beginning of the workday for cause as defined in 6-4.1,
6. any day the CONTRACTOR is prevented from working during the first 5 hours with at least 60 percent of the normal work force for cause as defined in 6-4.1.

The CONTRACTOR's activities involving work which requires street closure, detours, and barricades shall be confined to the hours between 7:30 a.m. and 4:00 p.m. Monday through Friday. In addition, the CONTRACTOR shall not perform any Work on Saturday, Sunday, or on AGENCY-designated holidays. AGENCY-designated holidays are listed in **TABLE 1 – AGENCY-DESIGNATED HOLIDAYS** below. Deviation from these hours will be permitted upon approval of the Engineer, except in emergencies involving immediate hazard to persons or property.

Deviations from these hours will not be permitted without the prior consent of the Engineer, except in emergencies involving immediate hazard to persons or property. In the event of either a requested or emergency deviation, inspection service fees will be charged against the CONTRACTOR. Service fees will be calculated at overtime rates including benefits, overhead, and travel time; and will be deducted from the amounts due the CONTRACTOR.

Failure of the CONTRACTOR to adhere to working day requirements will result in damages being sustained by the City. Such damages are, and will continue to be, impracticable and extremely difficult to determine.

TABLE 1 – AGENCY-DESIGNATED HOLIDAYS

New Year's Day (January 1*)

Martin Luther King, Jr. Day (3rd Monday in January)

President's Day (3rd Monday in February)

Memorial Day (Last Monday in May)

Juneteenth (June 19*)

Independence Day (July 4*)

Labor Day (1st Monday in September)

Veteran's Day (November 11*)

Thanksgiving Day (4th Thursday in November)

Day after Thanksgiving (Friday after Thanksgiving Day)

Christmas Eve (December 24*)

Christmas Day (December 25*)

**If a holiday falls on a Saturday, the previous Friday shall be deemed the holiday. If a Holiday falls on a Sunday, the following Monday shall be deemed the holiday. The City shall close each year from December 25 to January 1.*

6-3.4 Restrictions on closure of traffic lanes:

No contractual work shall be performed in the public Right-of-Way during the first week of school unless approved by the City Engineer.

A. All traffic lanes shall be open for public use on the days and at the times specified below, unless approved otherwise by the City Engineer:

1. Saturdays, Sundays and AGENCY designated holidays: from 12:01 a.m. to 11:59 p.m.
2. Fridays and any days preceding an AGENCY designated holiday: from 3:00 p.m. to 11:59 p.m.
3. Non-construction hours: all hours when the CONTRACTOR's employees are not physically present at the construction site actively performing contract work.

B. On those days and hours when closure of traffic lanes is not prohibited under the provisions of the preceding subparagraph A, no more than one travel lane may be closed at any time during construction hours. During any lane closure, flashing arrow boards shall be used in accordance with the current version of the California MUTCD.

C. Traffic signals shall not be placed in flash operation during the hours that traffic lanes must be kept open as defined in Paragraph A. Under no circumstances shall traffic signal be placed in flash operation without prior approval from the Project Engineer. Traffic signal will be only placed in flash operation by City personnel. CONTRACTOR shall contact the Project Engineer at least two (2) working days in advance to coordinate traffic signal service.

6-4 DELAYS AND EXTENSIONS OF TIME.

6-4.4 Written Notice and Report. *Add the following:*

Whenever the CONTRACTOR foresees any delay in the prosecution of the work, and in any event immediately upon the occurrence of any delay which the CONTRACTOR regards as unavoidable, he/she shall notify the Engineer in writing of the probability of the occurrence of such delay and

its cause so that the Engineer may take immediate steps to prevent, if possible, the occurrence or continuance of the delay, or, if prevention is not possible, may determine whether the delay is to be considered avoidable or unavoidable, how long it continues, and to what extent it will delay the prosecution and completion of the work. It will be concluded that any and all delays which have occurred in the prosecution and completion of the work have been avoidable delays, except such delays as shall have been called to the attention of the Engineer at the time of their occurrence and found by him/her to have been unavoidable. The CONTRACTOR shall make no claims for any delay not called to the attention of the Engineer at the time of its occurrence as an unavoidable delay.

6-7 TERMINATION OF THE CONTRACT FOR DEFAULT.

6-7.1 General. *Add The following:*

If the CONTRACTOR fails to begin delivery of material and equipment, to commence the Work within the time specified, to maintain the rate of delivery of material, to execute the Work in the manner and at such locations as specified, or fails to maintain the Work schedule which will insure the AGENCY's interest, or, if the CONTRACTOR is not carrying out the intent of the Contract, the AGENCY may serve written notice upon the CONTRACTOR and the Surety on its Faithful Performance Bond demanding satisfactory compliance with the Contract.

6-9 LIQUIDATED DAMAGES. *Add the following:*

The CONTRACTOR agrees to forfeit and pay the AGENCY the amount of Six Thousand Seven-Hundred Dollars ($6,700.00) per day for each and every day of unauthorized delay beyond the completion date, which shall be deducted from any monies due the CONTRACTOR. This payment shall be considered liquidated damages. CONTRACTOR agrees that such liquidated damages are reasonable under the circumstances existing at the time of execution of the contract, that such liquidated damages are to compensate AGENCY for losses that are difficult to measure and that such damages are not a penalty.

The AGENCY's agreement to waive a specific time provision or to extend the time for performance shall not constitute a waiver of any other time provision contained in the Contract Documents.

Failure of the CONTRACTOR to complete performance promptly within the additional time authorized in a waiver or extension of time agreement shall constitute a material breach of this Contract entitling the AGENCY to terminate this agreement.

SECTION 7 - MEASUREMENT AND PAYMENT

7-1 MEASUREMENT OF QUANTITIES FOR UNIT PRICE WORK.

7-1.1 General. *Add the following:*

The planimeter shall be considered an instrument of precision adapted to measurement of all areas.

7-3 PAYMENT

7-3.1 General. *Add the following:*

The quantities listed in the Bid schedule will not govern final payment. Payment to the CONTRACTOR will be made only for actual quantities of Contract items constructed in

accordance with the Plans and Specifications. Upon completion of construction, if the actual quantities show either an increase or decrease from the quantities given the Bid schedule, the Contract Unit Prices will prevail subject to the provisions of 7-3.5.1.

At the expiration of 35 calendar days from the date of acceptance of the Work by the board, or as prescribed by law, the amount deducted from the final estimate and retained by the AGENCY will be paid to the CONTRACTOR except such amounts as are required by law to be withheld by properly executed and filed notices to stop payment, or as may be authorized by the Contract to be further retained.

7-3.2 Partial and Final Payment. *Add the following:*

From each progress estimate, 10 percent will be deducted and retained by the AGENCY, and the remainder less the amount of all previous payments will be paid. After 50 percent of the Work has been completed and if progress on the Work is satisfactory, the deduction to be made from remaining progress estimates and from the final estimate may be limited to $500 or 10 percent of the first half of total Contract amount, whichever is greater.

The closure date for period progress payments will be the twenty-fifth day of each month. Authorization to pay is commonly received on the second Wednesday of the following month. The AGENCY requires four to six weeks to review all progress payments, issue payment checks, present progress payment to Council for approval, and release payment to CONTRACTOR. However, payments will be withheld pending receipt of any outstanding reports required by the Contract Documents. In addition, the final progress payment will not be released until the CONTRACTOR returns the control set of plans and specifications showing the as-built conditions.

The full five (5) percent retention will be deducted from all payments. The final retention will be authorized for payment thirty-five (35) days after the date of recordation of the Notice of Completion.

7-3.4 Mobilization. *Add the following:*

Mobilization shall conform to the provisions of Sections 7-3.4 of the Standard Specifications. This item shall also include any and all costs associated with demobilization at the time of project completion. The maximum price for this bid item **shall not exceed 5 percent** of the total contract price at the time of award.

PAYMENT

Payment for **MOBILIZATION** bid items shall be at the contract bid item price per lump sum (LS) and shall be payable as follows for each payment upon approval of the Public Works Director/City Engineer.

a) Payment of up to 50 percent of the contract lump sum bid price for mobilization at the first progress payment.
b) Payment to 75 percent of the contract lump sum bid price for mobilization when the monthly partial payment estimate of the total amount earned to date, not including the amount earned for mobilization, is 30 percent or more of the original contract amount.
c) Payment to 100 percent of the contract lump sum bid price for mobilization when the monthly partial payment estimate of the total amount earned to date, not including the amount earned for mobilization, is 50 percent or more of the original contract amount.

7-3.6 Stipulated Unit Prices. *Add the following:*

Stipulated Unit Prices are unit prices established by the AGENCY in the Contract Documents.

7-4 PAYMENT FOR EXTRA WORK.

7-4.1 General. *Add The following:*

New or unforeseen work will be classified as "extra work" when the Engineer determines that it is not covered by the Contract Unit Prices or stipulated unit prices.

7-4.2 Basis for Establishing Costs.

7.4.2.4 Other Items. *Add the following:*

Invoices covering all such items in detail shall be submitted with the request for payment.

7-5 PAYMENT FOR CHANGES REQUESTED BY THE CONTRACTOR. *Add the following:*

Changes in the Plans and Specifications, requested in writing by the CONTRACTOR, which do not materially affect the Work, and which are not detrimental to the Work or to the interests of the AGENCY, may be granted by the Engineer. Nothing herein shall be construed as granting a right to the CONTRACTOR to demand acceptance of such changes.

SECTION 8 - FACILITIES FOR AGENCY PERSONNEL

8-6 BASIS OF PAYMENT. *Substitute the following:*

All costs incurred in furnishing, maintaining, servicing, and removing field officers, laboratories, or bathhouse facilities required at the project site shall be included in the bid item for furnishing such facilities. If such facilities are required by the Plans or Specifications and no bid item is provided in the proposal, the costs shall in included in other items for which bids are entered. Such costs incurred in connection with offices and laboratories at plants shall be borne by the plant owners.

The first progress payment will not be approved until all facilities are in place and fully comply with the Contract Documents.

(End of Section)

APPENDIX I

FY 19-20 STREET IMPROVEMENT PROJECT
PROJECT SPECIFICATION NO. 2020-01 (002001)
IN THE CITY OF SOUTH PASADENA, CALIFORNIA

Technical Provisions for FY 19-20 Street Improvement Project

The following Technical Provisions describe materials, methods of construction, and measurement and payment for items of work that are unique to the project. These provisions supplement, amend, or replaced the requirements of the Standard Specifications for Public Works Construction ("SSPWC" or "Greenbook"). To the extent that anything in these Special Provisions conflicts with the terms or requirements of the SSPWC, these Special Provisions shall control.

Approved for use on June 7, 2023
294856.v3

TECHNICAL PROVISIONS

A. SCOPE OF WORK

The work consists of furnishing all materials, equipment, tools, labor, and incidentals required to complete the improvements shown on the Specifications and Contract Documents. The work performed under this contract is summarized in the Notice Inviting Sealed Bids and includes, but is not limited to each bid item listed in the Contractor's Bid Proposal, as covered in the Standard Specifications, and as described in the corresponding items on the following pages. The work in general, to be performed pursuant to these specifications, consists of pavement rehabilitation and replacement of mains, valves, water services, meters, and other appurtenances. The project also includes repair of damaged PCC curb and gutter, sidewalks, and driveways at various locations within the project limits, sawcut, removal and disposal of existing asphalt roadway sections, removal of macadam and subgrade, cold milling of existing pavement, subgrade preparation and compaction, crushed miscellaneous base (CMB), asphalt concrete pavement, removal and reconstruction of damaged PCC curb and gutter, sidewalk, driveway approaches, and ADA curb ramps, utility adjustments, installation of new water meters, services, valves, and appurtenances, sewer line repairs, traffic signing, thermoplastic striping and pavement markings; traffic control and all appurtenant work thereto necessary for the proper construction of the contemplated improvements, in accordance to Plans and Specification entitled as FY 19-20 Street Improvement Project.

The limits of work include:

Arroyo Verde Road (Marmion Way to Monterey Road)
Glendon Way (Lyndon Street to Monterey Road)
Mill Road (Garfield Avenue to end of roadway)
Milan Avenue (Oak Street to Edgewood Drive)
Edgewood Drive (Milan Avenue to Wayne Avenue)
Pine Street (Meridian Avenue to Huntington Drive)
Oneonta Knoll Street (Fremont Avenue to Primrose Avenue)
Maple Street (Fremont Avenue to Primrose Avenue)
Maple Street (Meridian Avenue to Huntington Drive)

B. TIME OF COMPLETION

The Contract Time of Completion is specified in the Contractor's Bid Proposal.

C. EMERGENCY INFORMATION

The names, addresses, and telephone numbers of the Contractor and Subcontractors, or their representatives, shall be filed with the City Public Works Department and the City Police Department prior to beginning work.

D. MATERIALS TESTING

Compaction tests will be performed for the City by an independent testing firm. The results of said tests will be made available to the Contractor after review and approval by the City Public Works Department. The costs of all passing tests will be paid for by the City. The cost of failing tests will be the responsibility of the Contractor, and will be deducted from monies due him.

To be acceptable, tests must be ordered and witnessed by the City Public Works Department, or his representative. The City Public Works Department may order tests at any location and to a maximum depth of six (6) inches. The Contractor shall assist the City Public Works Department in performing these tests.

E. ENVIRONMENTAL MITIGATION

The Contractor shall comply with the following environmental mitigations:

All storm drains within and immediately adjacent to the project limits are to be protected from pollutants through the use of BMP's as directed by the City Public Works Department. BMP's will include but are not limited to placement of sandbags or other water containment devices and wet vacuuming of concrete residue during saw cutting and pressure washing operations. Washing down of sediment, concrete residue or any other debris to the storm drain is strictly prohibited by City Ordinance and State regulation of storm water quality. The BMP's shall be furnished and installed by the Contractor, and no additional compensation will be allowed therefore.

The Contractor shall be responsible to track, and provide a copy to the City of total amount of recycled materials that was recycled at the recycling plant for this project.

F. DESCRIPTION OF BID ITEMS

The unit prices to be paid for the items listed in the Contractor's Proposal as defined herein shall be considered full compensation for furnishing all labor, materials, tools, and equipment, and doing all work involved in furnishing and installing the materials complete and in place, in accordance with the details shown on the Plans, as specified herein, and as directed by the City Public Works Department.

All incidental work which is neither shown on the Plans nor otherwise specified, and which is necessary to complete the construction of improvements as shown on the Plans and as specified herein, shall be furnished and installed as though such work were shown on the Plans or specified herein, and no additional compensation will be allowed therefore.

BID ITEM NO. 1 – MOBILIZATION

GENERAL

Mobilization shall conform to the provisions of Sections 7-3.4 of the Standard Specifications. This item shall also include any and all costs associated with demobilization at the time of project completion. This item shall also include the installation, maintenance and removal of any necessary BMPs for SWPPP purposes throughout the duration of the project. The maximum price for this bid item **shall not exceed 5 percent** of the total contract price at the time of award.

PAYMENT

Payment for **BID ITEM NO. 1 - MOBILIZATION** shall be at the contract bid item price per lump sum (LS) and shall be payable per Section 7-3.4 of the Special Provisions.

BID ITEM NO. 2 – TRAFFIC CONTROL

GENERAL

The Contractor shall provide all traffic controls necessary to provide for the safe and expeditious movement of traffic, motorized and non-motorized (including pedestrian traffic), through the construction zones, as well as those necessary to provide for the safety of the work force performing the construction per the Traffic Control Plans included in the project drawings. Two dedicated flagmen will be required at intersections where shown on the plans and whenever at least one lane of traffic cannot be maintained simultaneously in both directions of travel, as directed by the Engineer. Access to businesses and residences must be maintained at all times.

The Contractor shall provide adequate pedestrian and vehicular traffic controls for the duration of the work in accordance with the Contract Documents including Section 601 of the SSPWC, the Work Area Traffic Control Handbook (WATCH), Caltrans' Manual of Traffic Controls for Construction and Maintenance Work Zones (latest edition, Chapter 5 of the Traffic Manual, hereafter "Manual of Traffic Controls") and the City. The Contractor may obtain the Manual of Traffic Controls from Caltrans District 7, 120 South Spring Street, Los Angeles, California.

The Contractor shall include any temporary pavement necessary for the safe and expeditious movement of traffic at no additional charge.

TRAFFIC CONTROL ON ARROYO VERDE ROAD

Arroyo Verde Road shall be closed at the railroad crossing for the duration of construction on Arroyo Verde Road. The Contractor shall schedule their operations to complete the work on Arroyo Verde Road without interruptions between work activities.

Arroyo Verde Drive shall be closed to through traffic and the Contractor shall provide traffic control plans and a detour plan signed by either a qualified licensed Civil Engineer or Traffic Engineer for City review and approval.

K rail or water filled barriers shall be placed within 2' of the railroad crossing gates extending from curb to curb, completely blocking vehicles, including the Contractor's vehicles and equipment, from crossing the railroad tracks. The Contractor shall stage their work so at least one of the pedestrian crossings remains open at all times.

SIGNS

All excavations required for the purpose of installing traffic control signs, including construction area signs, shall be performed by had methods without the use of power equipment, except that power equipment may be used if it is determined there are not utility facilities in the area of the proposed holes. Contractor shall notify Underground Service Alert – Southern California (USA) at 811 at lease 2 working days, but no more than 14 calendar days, prior to commencing any excavation for said sign posts.

All signage conflicting with required traffic control signage shall be removed or suitably covered. Said signs shall be replaced unless designated for removal or relocation of the Plan.

This item shall include the temporary relocation of existing signs as necessary. Additionally, signs shall be posted directing pedestrians to the location of any relocated mailboxes.

The Contractor shall be responsible for the fabrication and installation of any custom detour and informational signs required for traffic control.

TEMPORARY PAVEMENT DELINEATION

Temporary pavement delineation shall be furnished, placed, maintained and removed in accordance with the provisions in Section 12-3.01, "General", of the Caltrans Standard Specifications and these special provisions. Nothing in these special provisions shall be construed as to reduce the minimum standards specified in the Manual of Traffic Controls published by Caltrans or as relieving the Contractor from his responsibility as provided in the SSPWC. Temporary pavement delineation shall be either paint or tape unless otherwise approved by the Engineer.

Whenever the work causes obliteration of pavement delineation, temporary or permanent pavement delineation shall be in place prior to opening the traveled way to public traffic. Lane line or centerline pavement delineation shall be provided at all times for traveled days open to public traffic.

All work necessary, including any required lines or marks, to establish the alignment of temporary pavement delineation shall be performed by the Contractor. Surfaces to receive temporary pavement delineation shall be dry and free of dirt and loose material. Temporary pavement delineation shall not be applied over existing pavement delineation or other temporary pavement delineation. Temporary pavement delineation shall be maintained until

superseded or replaced with a new pattern of temporary pavement delineation or permanent pavement delineation.

Temporary pavement markers and removable traffic type tape which conflicts with a new traffic pattern or which is applied to the final layer of surfacing or existing pavement to remain in place shall be removed when no longer required for the direction of public traffic, as determined by the Engineer.

PAYMENT

Payment for **BID ITEM NO. 2 – TRAFFIC CONTROL** shall be at the contract LUMP SUM (LS) price bid and shall include full compensation for all labor, materials, tools, equipment, and incidentals necessary to do all the work thereof. Because traffic detour and traffic control will be required throughout the life of the project, payment of the lump sum bid amount shall be made with each progress payment in direct proportion to the amount of the base bid, excluding Mobilization, and Traffic Control, earned to date.

BID ITEM NO. 3 – CONSTRUCTION SURVEY & STAKING, INCLUDING PRESERVATION & RESTORATION OF EX. MONUMENTS & TIES

GENERAL

It shall be the responsibility of the Contractor to supply any and all construction surveying and staking as required. Contractor is also responsible for preservation and/or perpetuation of all existing monuments which control subdivisions, tracts, boundaries, streets, highways, or other rights-of way, easements, or provide survey control which will be disturbed or removed due to Contractor's work. Contractor shall provide a minimum of 10 working days' notice to the Engineer prior to disturbance or removal of existing monuments, and shall provide permanent witness monuments and file the required documentation with the County Surveyor in conformance with Business and Professions Code Section 8771.

Prior to start of any construction the Contractor's surveyor shall send a formal correspondence to the Engineer, signed and stamped, that He/She has inspected the site and describe all the found items and certify that they have been tied.

At completion of the project, prior to finalization, the Contractor's surveyor shall send a certification letter to the Engineer, certifying that all disturbed centerline ties, benchmarks, monuments, and property line tags have been reset.

Unless otherwise provided in the Special Provisions, lines and grades for construction shall be the responsibility of the Contractor, with the following provisions:

Prior to removal of improvements, the Contactor shall verify line and grades shown on the plans. The Contractor is responsible to identify any survey inconsistencies. Any questionable grade, elevation, or location shall be brought to

the immediate attention of the Engineer in writing for clarification prior to construction.

All work under this contract shall be built in accordance with the lines and grades shown on the plans. Field survey for establishing these and for the control of construction staking, shall be performed under the supervision of a California-licensed Land Surveyor or Civil Engineer, as allowed by law. Staking shall be performed on all items ordinarily requiring grade and alignment, at intervals normally accepted by the agencies and trade involved.

The Contractor shall provide a copy of the Land Surveyor's office calculations and grade sheets to the Engineer. The Contractor shall be responsible for any error in the finished work and shall notify the Engineer within one (1) working day of any discrepancies or design errors discovered during staking.

The work required to re-set survey monuments (Spike & Washer or Lead & Tag) and to adjust existing monument frames and covers to grade shall conform to Section 2-9 of the Greenbook, and in compliance with the Professional Land Surveyors' Act (Business and Professional Code, Chapter 15, Division 3, and as directed by the Engineer.

All work shall be performed by, or under direct supervision of, and all documents shall be signed and sealed by either a professional Civil Engineer or a Land Surveyor registered with the State of California.

Prior to start of construction, the Contractor shall inventory all existing survey monuments and ties; a copy of this inventory shall be submitted to the Engineer. Submitted documents shall include field notes and sketches which must contain existing information of centerline, control points, survey monuments and swing ties to be replaced such as existing L.S. No. or R.C.E. No., per the referenced applicable and recorded Parcel Map No., or Tract Map No., and other related information.

The Contractor shall obtain prior approval from the Engineer before setting new survey monuments and ties.

New survey monuments shall be set on new pavement surface with a 2.5" (minimum) P.K. nail, spike, or equal and brass washer with an R.C.E. or a L.S. tag. Four (4) new control lead and tack swing ties shall be set on top of curb for each new survey monument.

If existing notches of a monument are on the manhole ring, said notches must be ground out after a new PCC collar is constructed around the manhole. The Contractor shall provide four points (monuments) of four-foot tangent over ties. Requirements shall be per the preceding paragraph.

If the Contractor fails to set new survey monuments and ties, the City will perform said work and deduct all its related costs from the contract. The deduction shall include the cost of all the City personnel time involved.

The Contractor must submit a record of survey and a corner record for each new

survey monument and ties to the office of the Los Angeles County Surveyor for approval and then submit all approved monument documents to the City before final payment can be processed.

PAYMENT

Payment for **BID ITEM NO. 3 – CONSTRUCTION SURVEY & STAKING, INCLUDING PRESERVATION & RESTORATION OF EX. MONUMENTS & TIES** shall be at the contract LUMP SUM (LS) price bid, and shall include full compensation for all labor, materials, tools, equipment and incidentals necessary to do all the work involved thereof, complete, in place, and accepted. Payment for construction surveying, construction staking, resetting of survey tags and monuments, professional services, office calculations, preparation and filing of corner records before and after construction, county fees, monuments, swing ties, certification letters, furnishing all labor, materials, tools, equipment, and incidentals, and for doing all the work involved shall be considered as included in the contract LUMP SUM (LS) price bid for Construction Survey & Staking, and no additional compensation will be allowed.

BID ITEM NO. 4 – STORMWATER POLLUTION PREVENTION PLAN BMP'S

GENERAL

See Special Provisions Section 3-12.6, "Water Pollution Control.

PAYMENT

Payment for **BID ITEM NO. 4 – STORMWATER POLLUTION PREVENTION PLAN BMP'S** shall be at the contract LUMP SUM (LS) price bid, and shall include full compensation for all labor, materials, tools, equipment and incidentals necessary to do all the work involved thereof, complete, in place, and accepted. No additional compensation will be allowed.

BID ITEM NO. 5 – REMOVE SUBGRADE (UNCLASSIFIED EXCAVATION)
BID ITEM NO. 6 – REMOVE EXISTING MACADAM AND SUBGRADE

GENERAL

Remove Subgrade (Unclassified Excavation) shall be defined as Unclassified Excavation conforming to section 300-2 of the Standard Specifications and shall consist of all excavation within the roadway limits required for construction of the proposed roadway surface, and shall include removal and disposal of existing aggregate base materials, and subgrade as shown on the plans and as required by the Engineer.

Remove Existing Macadam and Subgrade shall be defined as Unclassified Excavation conforming to section 300-2 of the Standard Specifications and shall consist of all excavation within the roadway limits required for construction of the proposed roadway surface, and shall include removal and disposal of existing macadam, aggregate base materials, and subgrade as shown on the plans and as required by the Engineer.

In areas where macadam is encountered during excavation, the bid item Remove Existing Macadam and Subgrade shall be used. Remove Subgrade (Unclassified Excavation) shall only be used in areas where no macadam is found during excavation.

In addition to those items specified in Section 300-2.1, remove subgrade and remove existing macadam and subgrade shall include all grading, shaping, excavation, compacting, subgrade preparation, consolidating or other work that is needed to establish the final profiles and subgrade for the miscellaneous P.C.C. and roadway improvements.

All soils and materials are subject to testing by a Materials Laboratory approved by the Engineer.

Excavation shall be done in accordance with Section 300-2 of the Standard Specifications and these Special Provisions.

The Contractor shall call USA prior to excavation and shall "pothole" existing utilities that fall within the proposed pavement "dig-out" areas as necessary to determine their depth to avoid damaging said utilities.

All root pruning and tree removals to be performed must be coordinated with the City Arborist a minimum of 2 working days in advance of scheduled work. **The Contractor shall not cut any roots or remove any trees without the prior consent of the City Arborist.** General guidelines set forth by the City Arborist dictate root pruning no closer to the trunk than a distance equal to 3 times the trunk diameter of well-established rooted trees, and 5 times the trunk diameter of shallow rooted trees. The locations of existing trees where tree roots are expected to be encountered are shown on the plans.

Subsection 300-2.1.1 is hereby added to Section 300 of the Standard Specifications as follows:

Any damage beyond the construction limit shall be repaired at the Contractor's expense per Section7-9 of the Standard Specifications.

Subsection 300-2.2.2 of the Standard Specifications is hereby deleted and replaced with the following:

If required excavated material is unsatisfactory for use as backfill solely because

of high moisture content, the Contractor shall provide imported Crushed Miscellaneous Base backfill per the requirements of Subsection 306-1.3.7 of the Standard Specifications. If such high moisture content is not the result of any action on the part of the Contractor, or inaction in protecting the work during the course of the Contract, the imported backfill will be paid at the contract unit price bid per ton for CRUSHED MISCELLANEOUS BASE, based on weigh master's certificates, and no additional compensation will be allowed.

Payment for the requirements of OVER-EXCAVATION, as directed and authorized by the Engineer, including all labor, tools, equipment and materials associated with excavation, removal, transportation and disposal of any excess material away from the project site, shall be included in the contract unit price bid per cubic yard, and no additional compensation will be allowed.

Otherwise, the work and material shall be at the expense of the Contractor.

It shall be the Contractor's responsibility to remove and dispose of all excess material resulting from earthwork operations, including excavated native soils, P.C.C., asphalt pavement, aggregate base materials, pavement fabric and material of any character that is not suitable for use in fill or backfill. Any excess material not needed for the project shall be removed from the project by the Contractor and disposed of in compliance with local, state and federal regulations.

The text of Subsection 300-2.7 of the Standard Specifications is hereby deleted and replaced with the following:

Selected materials encountered in the excavations within the project limits that meet the specifications for base material, trench bedding or backfill, topsoil or other specified materials shall be used as shown on the Plans, in the Specifications, or as directed by the Engineer. Topsoil excavated may be considered only for the purpose of backfilling areas to be planted.

Subsections of 300-2.8 1) and 2) of the Standard Specifications are hereby deleted and replaced with the following:

1) The measurements for the bid item for Remove Subgrade (Unclassified Excavation) and Remove Existing Macadam and Subgrade shall include subgrade excavation, sawcutting, and aggregate base materials within the roadway prism. Quantity measurement shall be based on field measured excavation areas of the removal areas as shown on the plans. No measurement shall be made for asphalt concrete, curb ramp, driveway, local depression, cross gutter, curb and gutter or sidewalk removals.

PAYMENT

Payment for **BID ITEM NO. 5 – REMOVE SUBGRADE (UNCLASSIFIED EXCAVATION** shall be included in the contract unit price bid per cubic yard

(CY), and shall include all labor tools, equipment and materials required for removal, and disposal of existing base materials, subgrade, and other excavation necessary to establish the finished subgrade elevations for the roadway improvements, as shown on the plans, complete in place, and as accepted by the Engineer. No additional compensation will be allowed therefore.

Payment for **BID ITEM NO. 6 – REMOVE MACADAM AND SUBGRADE** shall be included in the contract unit price bid per cubic yard (CY), and shall include all labor tools, equipment and materials required for removal, and disposal of existing macadam, disposal fees if any, base materials, subgrade, and other excavation necessary to establish the finished subgrade elevations for the roadway improvements, as shown on the plans, complete in place, and as accepted by the Engineer. No additional compensation will be allowed therefore.

BID ITEM NO. 7 – REMOVE EXISTING AC

Remove AC shall conform to the provisions of Section 401 of the Standard Specifications and shall be performed as required per the details shown on the Plans, or as directed by the Engineer.

Residue from removing AC pavement shall not be permitted to flow or travel into gutters, onto adjacent street surfaces or parkways. All residues shall be completely removed by an acceptable or approved automated sweeper and disposed of the same day of the removal. All materials to be removed as indicated on the plans shall be disposed of outside of right-of-way at a legal dump site or recycled.

Contractor shall scan the work area using a metal detector of adequate strength prior to any saw cutting or removal of the existing pavement. Contractor shall be responsible for locating and protecting manhole, water valve, utility access frames and covers, survey monuments, or other metal appurtenances buried below the existing pavement surface whether shown on the plans or not.

Asphalt concrete pavement shall be removed to neatly sawed edges. Saw cuts shall be to a minimum depth of 1-1/2 inches. Where only the surface of exiting bituminous pavement is to be removed, the method of removal shall be approved by the Engineer, and a minimum laying depth of 1 inch of new pavement material shall be provided at the join line. Where bituminous pavement adjoins a trench, the edges adjacent to the trench shall be saw cut to neat straight lines before resurfacing to ensure that all areas to be resurfaced are accessible to the rollers used to compact the subgrade or paving materials.

PAYMENT

Payment for **BID ITEM NO. 7 – REMOVE EXISTING AC** shall be at the contract bid item price per square foot (SF), including removal and disposal of

asphalt concrete surfacing, hauling, and all labor, tools, equipment and materials required to complete the work per the details shown on the plans, complete in place and as accepted by the Engineer.

BID ITEM NO. 8 – ADJUST WATER VALVE CAN & COVER TO GRADE

GENERAL

Contractor shall adjust existing water valve cans and covers to grade in conformance to the provisions of Section 403 of the Standard Specifications, and the following additions and revisions, where shown on the plans or as required by the Engineer.

Water valves shall be protected in place and shall be accessible at all times during construction.

Valve covers shall be marked as to their location by the Contractor prior to the placement of the pavement. The Contractor shall furnish new valve cans if existing cans are damaged during operation. Existing covers shall be replaced with new covers which shall be adjusted to new pavement grade 48 hours after paving operation and painted blue per the Engineer.

Contractor shall notify the City of South Pasadena Water Department, forty-eight hours prior to beginning work. All work adjusting City water valve cans and covers to grade shall be performed by the Contractor and inspected and approved by the City of South Pasadena Water Department.

Valve boxes shall be checked with a valve key for proper operation.

The Contractor shall be responsible for maintaining location of, and access to, all water line gate valves during construction operations. The Contractor may salvage and utilize all existing caps or sleeves, but shall be required to furnish all sleeve extensions. Any lost caps or sleeves shall be replaced by the Contractor at his cost.

All existing broken water sleeves shall be removed and replaced by the Contractor who shall contact the City Water Department to pick up new City supplied sleeves for replacement.

PAYMENT

Payment for **BID ITEM NO. 8 – ADJUST WATER VALVE CAN & COVER TO GRADE** shall be at the contract bid item price per each (EA) existing valve (including replacement can and/or cover) adjusted to grade, and shall include full compensation for removal, salvage and disposal of existing improvements, providing all labor, tools, equipment, materials and incidentals necessary for doing the work in compliance with the applicable standards. No additional compensation shall be allowed.

BID ITEM NO. 9 – ADJUST MANHOLE FRAME & COVER TO GRADE

GENERAL

Adjust manhole frame and cover to grade shall conform to Section 403 of the Standard Specifications, where shown on the plans or as required by the Engineer. Adjustment to grade of sewer manholes shall conform to SPPWC Standard Plan No. 205-2.

Adjustment to grade of Los Angeles County storm drain manholes shall conform to Los Angeles County Flood Control District (LACFCD) standards and specifications. Contractor shall prepare, process, pay all fees, and obtain a flood permit from LACFCD for adjustment of their manholes (see Appendix B).

Adjustment to grade of Los Angeles County sewer manholes shall conform to Los Angeles County Sanitation District (LACSD) standards and specifications (see Appendix B).

Work shall include the removal or furnishing of grade rings as necessary to adjust the manhole to grade.

To Subsection 403-3, "Manholes in Asphalt Concrete Pavement," add the following:

Delete Paragraph 4 and add:

The method of adjusting manholes in areas of reconstruction shall be as follows:

1. Upon completion of roadway construction, circular holes shall be cut where the manholes exist. The diameter of the circular hole shall be at least 24-inches larger than the O.D. of the manhole.

2. The manholes shall then be raised or lowered to the finished pavement. The manhole frame and cover shall be suitably blocked and grouted in-place to the satisfaction of the Engineer.

3. A concrete collar shall be poured around the manhole to 3-inches below finished pavement grade. Said concrete collar shall have a minimum depth of 8-inches and be placed over 4-inches CMB thoroughly compacted to a minimum relative compaction of 95 percent.

4. After the concrete has cured sufficiently, a tack coat shall be applied and a minimum of 3” of asphalt concrete hot mix Type C2 PG 64-10 shall be placed to finished pavement grade.

Portland cement class shall be 560-C-3250 as specified in Section 201 of the Greenbook.

Contractor shall notify the Metropolitan Water District (MWD), Los Angeles County Sanitation District (LACSD) and Los Angeles County Flood Control District (LACFCD) for coordination of manhole adjustment of their facilities at

least two working days prior to beginning work.

The Contractor shall exercise care so that surface materials such as rocks, dirt and debris do not enter sewer or storm drain lines.

All manholes shall be thoroughly cleaned and any construction debris removed which may have entered the manhole due to the Contractor's operations.

PAYMENT

Payment for **BID ITEM NO. 9 – ADJUST MANHOLE FRAME & COVER TO GRADE** shall be at the contract bid item price per each (EA) and shall include full compensation for providing all labor, tools, equipment, materials and incidentals necessary for doing the work in compliance with the applicable standards. No additional compensation shall be allowed.

BID ITEM NO. 10 – FURNISH AND INSTALL DETECTABLE WARNING SURFACE ON EXISTING RAMP

BID ITEM NO. 11 – SAWCUT & REMOVE EX. CURB RAMP AND CONSTRUCT PCC CURB RAMP PER SPPWC STD. PLAN 111-5 WITH RED BRICK DETECTABLE WARNING SURFACE

GENERAL

The work under this Bid Item shall include the following tasks.

1. Construction of 4" Concrete Curb Ramp:

The Contractor shall construct new 4" Portland cement concrete curb ramp, including integral curb and gutter, flares, monolithic and retaining curb, detectable warning surface, 2' minimum wide AC slot paving as required for new curb and gutter construction, and other miscellaneous concrete construction conforming to Sections 303-5 and 401 of the Standard Specifications, federal ADA requirements, and SPPWC Std. Plan 111-5, Case and Type per plan, and as directed by the Engineer.

Concrete shall be Class 520-C-2500.

Asphalt Concrete for slot paving shall be Type B PG 64-10, conforming to the requirements of Bid Item No. 10 of these Technical Provisions.

New improvements shall be constructed to grades indicated on the plans and in such a manner as to match existing improvements and field condition with proper grade to form a safe and smooth riding surface.

The Contractor shall be responsible to oversee the curing of all concrete

improvements to prevent graffiti damage or other unauthorized markings in new concrete surfaces. Any concrete surface deemed unacceptable to the Engineer, shall be replaced by the Contractor at no cost to the City.

Damage to any existing improvements shall be remedied by sawcutting, removal and reconstruction at the Contractor's expense and to the satisfaction of the Engineer.

Contractor shall submit a sample of the detectable warning surface to the Engineer for approval, prior to start of construction.

For all new P.C.C. curb ramp construction, the detectable warning surface required shall be **WET SET DETECTABLE WARNING PANELS** manufactured by ARMOR-TILE, SUREWERX, 325 Corporate Drive, Elgin, IL 60123, Tel: (844) 697-2920, orders.ci.usa@surewerx.com, or approved equal.

For all retrofit installations of detectable warning surfaces on existing curb ramps, the detectable warning surface required shall be **SURFACE MOUNT/RETROFIT DETECTABLE WARNING SURFACE** manufactured by ARMOR-TILE, SUREWERX, 325 Corporate Drive, Elgin, IL 60123, Tel: (844) 697-2920, orders.ci.usa@surewerx.com, or approved equal.

The color of the detectable warning surface shall be RED BRICK or approved equal, or as directed by the Engineer.

The detectable warning surface shall be installed across the entire width of the bottom of the passageway ramp, and shall conform to ADA Requirements and SPPWC Standard Plan 111-5, as directed by the Engineer.

The detectable warning surface shall be installed in accordance with the manufacturer's recommendations and instructions; and the manufacturer shall provide a minimum 5-year warranty, guaranteeing replacement when there is a defect in the dome shape, color fastness, sound on cane acoustic quality, or deterioration of the detectable warning surface. The warranty period shall commence on the date of acceptance.

Any existing improvements damaged by the Contractor's operations shall be replaced in kind at the Contractor's expense and no additional compensation will be allowed therefore.

The first paragraph of Subsection 303-5.6 of the Standard Specification is hereby deleted and replaced with the following:

Immediately after finishing operations are completed, Type 2 concrete curing compound shall be applied at rate of one gallon per 150 square feet.

The Contractor shall sawcut and remove existing asphalt concrete or existing concrete sidewalk and ramps within construction limits where encountered for

constructing new curb ramp. The remaining asphalt concrete pavement or PCC pavement adjacent to new curb ramp shall be protected in-place and intact. Any damage caused by the Contractor shall be replaced at no cost to the City.

All removals shall be to the nearest existing score lines. Contractor shall walk the job with the City Inspector to mark removal limits prior to commencing work. All new score lines shall be tooled and spacing should match existing.

The Contractor may also be directed by the Engineer to sawcut and remove existing improvements and construct four inch (4") concrete over four inch (4") CMB in parkway areas (adjoining to sidewalk areas) or beyond public right-of-way to match existing improvements.

The Contractor shall protect all existing drainage pipes and structures, and other existing improvements not designated to be removed, in-place and intact.

At all times the Contractor shall provide a safe and walkable temporary sidewalk with a minimum width of forty-eight inch (48") clearance adjoining excavated areas within parkway limits for wheelchair and pedestrians to travel around construction areas. If such clearance is not possible, barricading, plating, filling, or other measures shall be required.

2. Unclassified Excavation:

The unclassified excavation shall consist of all excavation for the construction of curb ramps. The Contractor shall also cut and remove any tree roots encountered within construction limit to at least six (6) inches below the subgrade.

Contractor shall protect and support in-place and intact all existing curb drain lines during excavation and construction.

3. Irrigation Lines and Sprinkler Heads:

The Contractor shall furnish and install all new pipe size to match existing but no less than ½" schedule 40, PVC pipe to tie into existing pipes, new sprinkler heads equal to or better than existing, and all appurtenances. All work shall conform to Sections 800-2 and 801-5 of the Standard Specifications and as directed by the Engineer.

Any damage beyond the construction limit shall be repaired at the Contractor's expense per Section 400 of the Standard Specifications.

The Contractor shall cut interfering portions of existing irrigation lines and cap all ends for future reconnection.

The Contractor shall modify, relocate or replace and/or extend all encountered irrigation lines or sprinkler heads so as to give full coverage to landscape area.

All repair and replacement of the irrigation system shall be done within five (5)

days or sooner after disconnection. During disconnection period of existing irrigation systems, the Contractor shall maintain the existing grass, trees, shrubs, and other existing landscape in a live condition with temporary irrigation system and/or shall water the landscaped areas by hand. Homeowner's water supply shall not be used without written consent from each homeowner.

As determined in the field by the Engineer, the Contractor may be directed to extend the existing sprinkler system or place a P.V.C. sleeve into the landscaped area between the curb and sidewalk and other locations as necessary.

Prior to accepting work, the Contractor must turn the system on, and it must work properly in the presence of and to the satisfaction of the Engineer and property owner. The Contractor, at no cost to the City, shall replace any damaged and dead grass or landscaping beyond construction limits resulting from Contractor's operation or insufficient water supplies.

4. Sod and Modified Class "A" Topsoil:

The Contractor shall furnish and place Modified Class "A" Topsoil and new sod in accordance with Section 800-1 of the Standard Specifications for parkways and behind the right-of-way areas. The limits of sodding shall be as indicated in this specification.

During construction, the Contractor shall protect and support existing irrigation lines and sprinkler heads in place and intact. The Contractor shall adjust them to the proper level if necessary.

Prior to performing any landscaping work, Contractor shall place a 4-inch (4") thick imported Modified Class "A" Topsoil for the top layer of landscaping area.

The Modified Class "A" Topsoil shall consist of 80% content of Class "A" Topsoil per the Standard Specifications and 20% content of processed wood product of type "I" organic soil amendment per the Standard Specifications.

The Contractor shall place new sod in the areas adjoining the newly constructed concrete improvements that were disturbed by his/her operations.

The Contractor shall also place new sod for filled and regraded areas. The Contractor may be directed by the Engineer to sod other areas as necessary in conformance with these Specifications.

The Contractor shall select the type of new sod that matches or most matches the existing sod, or as directed by the Engineer.

Upon the completion of the removal of existing concrete improvements for which no replacement is required, the Contractor shall backfill the void with Modified Class "A" Topsoil for placing new sod as directed in those respective bid items.

5. Miscellaneous Clearing and Grubbing:

The Contractor shall trim all encountered bushes, hedges, plants, and vegetation having diameters equal to or less than six inches (6") measured at eighteen inches (18") above adjacent top of curb within construction limits, as directed by the Engineer. All roots and stumps shall be removed and/or ground to six inches (6") below subgrade. Upon completion of trimming, all debris shall be cleared from the site.

6. Regrading:

Some areas adjoining to new sidewalk will be lower or higher than new sidewalk grade. At these locations the Contractor shall be required to regrade the area to a slope of 3:1 from the edge of the new sidewalk to meet existing ground.

The Contractor may be directed to regrade beyond the above ratio where necessary. Also, the Contractor shall fill all low areas to meet new or existing grade by using uncontaminated project excavation materials.

All regraded or filled areas shall receive four inch (4") thick Modified Class "A" Topsoil for placing new sod to match existing; therefore, the Contractor shall fill or excavate those areas accordingly. Sod shall be placed only where sod exists prior to cut and fill.

7. Root Pruning:

All root pruning to be performed must be coordinated with the City Arborist a minimum of 2 working days in advance of scheduled work. **The Contractor shall not cut any roots without the prior consent of the City Arborist.** General guidelines set forth by the City Arborist dictate root pruning no closer to the trunk than a distance equal to 3 times the trunk diameter of well-established rooted trees, and 5 times the trunk diameter of shallow rooted trees. The locations of existing trees where tree roots are expected to be encountered are shown on the plans.

8. Concrete Work Schedule:

The Contractor shall schedule and conduct all work such that the time between the demolition and reconstruction of the curb ramp, including sidewalk, retaining curb, curb and gutter, shall be limited to **five (5) working days** for residential areas and **three (3) working days** for business areas. Sidewalks shall not remain demolished over any weekend or holiday period without consent from the Engineer.

PAYMENT

Payment for **BID ITEM NO. 10 – FURNISH AND INSTALL DETECTABLE WARNING SURFACE ON EXISTING RAMP** shall be at the contract unit price bid per EACH (EA) detectable warning surface

constructed in place, and shall include full compensation for all labor, materials, tools, equipment, warranty, and incidentals necessary to complete the work involved, complete, in place, and accepted. No additional compensation will be allowed therefore.

Payment for **BID ITEM NO. 11 – SAWCUT & REMOVE EX. CURB RAMP AND CONSTRUCT PCC CURB RAMP PER SPPWC STD. PLAN 111-5 WITH RED BRICK DETECTABLE WARNING SURFACE** shall be at the contract bid item price per each (EA) ramp constructed in place, and shall include full compensation for all labor, materials, tools, equipment, and incidentals necessary to do all the work involved thereof, including all parkway area from BCR to ECR, complete, in place, and accepted.

Payment for the preceding requirements shall include, unless otherwise included in a separate bid item per plan:

1. Sawcut and removing existing concrete curb ramps, sidewalk and miscellaneous improvements, sawcutting, clearing and grubbing, unclassified excavation, 4" PCC curb ramp construction, including monolithic and retaining curbs, integral curb and gutter, AC slot paving, and detectable warning surface.

2. Restoring sprinkler systems including all reducers for different pipe sizes, and from existing or new pipes to the sprinkler heads, connection points, all fittings, all tees and ells, backfill material for pipe trench, and all miscellaneous materials for proper installation and for construction of complete sprinkler systems.

3. Furnishing and placing Modified Class "A" Topsoil and new sod.

4. Performing Miscellaneous clearing and grubbing.

5. Re-grading the areas behind the new sidewalk and curb ramp as stated herein.

6. Removing and replacing existing PCC improvements in the parkway or behind R.O.W. at the marked limits, or as directed by the Engineer in the field.

7. Adjusting water meter boxes, and pull boxes (including conduits) to finished grade.

8. Protecting in-place the existing mail boxes or installing new posts and reattach.

9. Grinding existing stumps only (trees were previously removed by others).

10. Removing miscellaneous parkway concrete, and replacing with modified class "A" topsoil.

11. Providing one foot minimum (1') wide AC slot patch (4"AC/4"CMB)

paving behind sidewalk adjacent to asphalt concrete driveways at required locations. Extend the AC repair limits where necessary to provide a 5% maximum slope ADA path of travel.

12. Tree root pruning as directed and approved by the City Arborist.

No additional compensation will be allowed.

BID ITEM NO. 12 – SAWCUT AND REMOVE EXISTING CURB RAMP, CURB AND GUTTER, AND SIDEWALK AND CONSTRUCT CUSTOM PCC CURB RAMP, CURB AND GUTTER, AND SIDEWALK PER DETAIL ON SHEET 4

GENERAL

The work under this Bid Item shall include the following tasks.

1. Construction of 4" Concrete Curb Ramp:

The Contractor shall construct all improvements per the detail on Sheet 4, including a new 4" Portland cement concrete curb ramp, curb and gutter, flares, monolithic and retaining curb, detectable warning surface, sidewalk, curb and gutter, 2' minimum wide AC slot paving as required for new curb and gutter construction, and other miscellaneous concrete construction conforming to Sections 303-5 and 401 of the Standard Specifications, federal ADA requirements, and SPPWC Std. Plan 111-5, Case and Type per plan, and as directed by the Engineer.

Concrete shall be Class 520-C-2500.

Asphalt Concrete for slot paving shall be Type B PG 64-10, conforming to the requirements of Bid Item No. 10 of these Technical Provisions.

New improvements shall be constructed to grades indicated on the plans and in such a manner as to match existing improvements and field condition with proper grade to form a safe and smooth riding surface.

The Contractor shall be responsible to oversee the curing of all concrete improvements to prevent graffiti damage or other unauthorized markings in new concrete surfaces. Any concrete surface deemed unacceptable to the Engineer, shall be replaced by the Contractor at no cost to the City.

Damage to any existing improvements shall be remedied by sawcutting, removal and reconstruction at the Contractor's expense and to the satisfaction of the Engineer. Removals, relocations, and/or adjustments not covered by a separate bid item but necessary for the proposed concrete construction shall be included in the unit price bid for the various items of work involved.

Contractor shall submit a sample of the detectable warning surface to the Engineer for approval, prior to start of construction.

For all new P.C.C. curb ramp construction, the detectable warning surface required shall be **WET SET DETECTABLE WARNING PANELS** manufactured by ARMOR-TILE, SUREWERX, 325 Corporate Drive, Elgin, IL 60123, Tel: (844) 697-2920, orders.ci.usa@surewerx.com, or approved equal.

The color of the detectable warning surface shall be RED BRICK or approved equal, or as directed by the Engineer.

The detectable warning surface shall be installed across the entire width of the bottom of the passageway ramp, and shall conform to ADA Requirements and SPPWC Standard Plan 111-5, as directed by the Engineer.

The detectable warning surface shall be installed in accordance with the manufacturer's recommendations and instructions; and the manufacturer shall provide a minimum 5-year warranty, guaranteeing replacement when there is a defect in the dome shape, color fastness, sound on cane acoustic quality, or deterioration of the detectable warning surface. The warranty period shall commence on the date of acceptance.

Any existing improvements damaged by the Contractor's operations shall be replaced in kind at the Contractor's expense and no additional compensation will be allowed therefore.

The first paragraph of Subsection 303-5.6 of the Standard Specification is hereby deleted and replaced with the following:

Immediately after finishing operations are completed, Type 2 concrete curing compound shall be applied at rate of one gallon per 150 square feet.

The Contractor shall sawcut and remove existing asphalt concrete or existing concrete sidewalk and ramps within construction limits. The remaining asphalt concrete pavement or PCC pavement adjacent to new curb ramp shall be protected in-place and intact. Any damage caused by the Contractor shall be replaced at no cost to the City.

All removals shall be to the nearest existing score lines. Contractor shall walk the job with the City Inspector to mark removal limits prior to commencing work. All new score lines shall be tooled and spacing should match existing.

The Contractor may also be directed by the Engineer to sawcut and remove existing improvements and construct four inch (4") concrete over four inch (4") CMB in parkway areas (adjoining to sidewalk areas) or beyond public right-of-way to match existing improvements.

The Contractor shall protect all existing drainage pipes and structures, and other

existing improvements not designated to be removed, in-place and intact.

At all times the Contractor shall provide a safe and walkable temporary sidewalk with a minimum width of forty-eight inch (48") clearance adjoining excavated areas within parkway limits for wheelchair and pedestrians to travel around construction areas. If such clearance is not possible, barricading, plating, filling, or other measures shall be required.

2. Unclassified Excavation:

The unclassified excavation shall consist of all excavation for the construction of curb ramps. The Contractor shall also cut and remove any tree roots encountered within construction limit to at least six (6) inches below the subgrade.

Contractor shall protect and support in-place and intact all existing curb drain lines during excavation and construction.

3. Irrigation Lines and Sprinkler Heads:

The Contractor shall furnish and install all new pipe size to match existing but no less than ½" schedule 40, PVC pipe to tie into existing pipes, new sprinkler heads equal to or better than existing, and all appurtenances. All work shall conform to Sections 800-2 and 801-5 of the Standard Specifications and as directed by the Engineer.

Any damage beyond the construction limit shall be repaired at the Contractor's expense per Section 400 of the Standard Specifications.

The Contractor shall cut interfering portions of existing irrigation lines and cap all ends for future reconnection.

The Contractor shall modify, relocate or replace and/or extend all encountered irrigation lines or sprinkler heads so as to give full coverage to landscape area.

All repair and replacement of the irrigation system shall be done within five (5) days or sooner after disconnection. During disconnection period of existing irrigation systems, the Contractor shall maintain the existing grass, trees, shrubs, and other existing landscape in a live condition with temporary irrigation system and/or shall water the landscaped areas by hand. Homeowner's water supply shall not be used without written consent from each homeowner.

As determined in the field by the Engineer, the Contractor may be directed to extend the existing sprinkler system or place a P.V.C. sleeve into the landscaped area between the curb and sidewalk and other locations as necessary.

Prior to accepting work, the Contractor must turn the system on, and it must work properly in the presence of and to the satisfaction of the Engineer and property owner. The Contractor, at no cost to the City, shall replace any damaged and dead grass or landscaping beyond construction limits resulting from

Contractor's operation or insufficient water supplies.

4. Sod and Modified Class "A" Topsoil:

The Contractor shall furnish and place Modified Class "A" Topsoil and new sod in accordance with Section 800-1 of the Standard Specifications for parkways and behind the right-of-way areas. The limits of sodding shall be as indicated in this specification.

During construction, the Contractor shall protect and support existing irrigation lines and sprinkler heads in place and intact. The Contractor shall adjust them to the proper level if necessary.

Prior to performing any landscaping work, Contractor shall place a 4-inch (4") thick imported Modified Class "A" Topsoil for the top layer of landscaping area.

The Modified Class "A" Topsoil shall consist of 80% content of Class "A" Topsoil per the Standard Specifications and 20% content of processed wood product of type "I" organic soil amendment per the Standard Specifications.

The Contractor shall place new sod in the areas adjoining the newly constructed concrete improvements that were disturbed by his/her operations.

The Contractor shall also place new sod for filled and regraded areas. The Contractor may be directed by the Engineer to sod other areas as necessary in conformance with these Specifications.

The Contractor shall select the type of new sod that matches or most matches the existing sod, or as directed by the Engineer.

Upon the completion of the removal of existing concrete improvements for which no replacement is required, the Contractor shall backfill the void with Modified Class "A" Topsoil for placing new sod as directed in those respective bid items.

5. Miscellaneous Clearing and Grubbing:

The Contractor shall trim all encountered bushes, hedges, plants, and vegetation having diameters equal to or less than six inches (6") measured at eighteen inches (18") above adjacent top of curb within construction limits, as directed by the Engineer. All roots and stumps shall be removed and/or ground to six inches (6") below subgrade. Upon completion of trimming, all debris shall be cleared from the site.

6. Regrading:

Some areas adjoining to new sidewalk will be lower or higher than new sidewalk grade. At these locations the Contractor shall be required to regrade the area to a slope of 3:1 from the edge of the new sidewalk to meet existing ground.

The Contractor may be directed to regrade beyond the above ratio where necessary. Also, the Contractor shall fill all low areas to meet new or existing grade by using uncontaminated project excavation materials.

All regraded or filled areas shall receive four inch (4") thick Modified Class "A" Topsoil for placing new sod to match existing; therefore, the Contractor shall fill or excavate those areas accordingly. Sod shall be placed only where sod exists prior to cut and fill.

7. Root Pruning:

All root pruning to be performed must be coordinated with the City Arborist a minimum of 2 working days in advance of scheduled work. **The Contractor shall not cut any roots without the prior consent of the City Arborist.** General guidelines set forth by the City Arborist dictate root pruning no closer to the trunk than a distance equal to 3 times the trunk diameter of well-established rooted trees, and 5 times the trunk diameter of shallow rooted trees. The locations of existing trees where tree roots are expected to be encountered are shown on the plans.

8. Concrete Work Schedule:

The Contractor shall schedule and conduct all work such that the time between the demolition and reconstruction of the curb ramp, including sidewalk, retaining curb, curb and gutter, shall be limited to **five (5) working days** for residential areas and **three (3) working days** for business areas. Sidewalks shall not remain demolished over any weekend or holiday period without consent from the Engineer.

PAYMENT

Payment for **BID ITEM NO. 12 – SAWCUT AND REMOVE EXISTING CURB RAMP, CURB AND GUTTER, AND SIDEWALK AND CONSTRUCT CUSTOM PCC CURB RAMP, CURB AND GUTTER, AND SIDEWALK PER DETAIL ON SHEET 4** shall be at the contract bid item price per each (EA) ramp constructed in place, and shall include full compensation for all labor, materials, tools, equipment, and incidentals necessary to do all the work involved thereof, including all parkway area shown on the plans, complete, in place, and accepted.

Payment for the preceding requirements shall include:

1. Sawcut and removing existing concrete curb ramps, sidewalk and miscellaneous improvements, sawcutting, clearing and grubbing, unclassified excavation, 4" PCC curb ramp construction, including monolithic and retaining curbs, and detectable warning surface.

2. All 4" PCC sidewalk, integral curb and gutter, and 2' minimum wide AC

slot paving shown in the detail.

3. Restoring sprinkler systems including all reducers for different pipe sizes, and from existing or new pipes to the sprinkler heads, connection points, all fittings, all tees and ells, backfill material for pipe trench, and all miscellaneous materials for proper installation and for construction of complete sprinkler systems.

4. Furnishing and placing Modified Class "A" Topsoil and new sod.

5. Performing Miscellaneous clearing and grubbing.

6. Re-grading the areas behind the new sidewalk and curb ramp as stated herein.

7. Removing and replacing existing PCC improvements in the parkway or behind R.O.W. at the marked limits, or as directed by the Engineer in the field.

8. Adjusting water meter boxes, and pull boxes (including conduits) to finished grade.

9. Protecting in-place the existing mail boxes or installing new posts and reattach.

10. Grinding existing stumps only (trees were previously removed by others).

11. Removing miscellaneous parkway concrete, and replacing with modified class “A” topsoil.

12. Providing one foot minimum (1’) wide AC slot patch (4”AC/4”CMB) paving behind sidewalk adjacent to asphalt concrete driveways at required locations. Extend the AC repair limits where necessary to provide a 5% maximum slope ADA path of travel.

13. Tree root pruning as directed and approved by the City Arborist.

No additional compensation will be allowed.

BID ITEM NO. 13 – SAWCUT & REMOVE EX. AND CONSTRUCT NEW 6” PCC DRIVEWAY PER SPPWC STD. PLAN NO. 110-2 (TYPE & SIZE PER PLAN)

GENERAL

The Contractor shall sawcut, remove, and dispose of existing improvements, and construct new driveway approach, including integral curb and gutter, conforming to the SPPWC Standard Plan No. 110-2, with driveway widths (W) and Driveway “X” as shown on the Plans, and as directed by the Engineer.

All related work shall conform to the provisions of Section 303-5 of the Standard Specifications, the Plans and these Specifications.

Concrete shall be Class 520-C-2500.

Asphalt Concrete for slot paving or driveway transitions on private properties shall be Type B PG 64-10, conforming to the requirements of Bid Item No. 10 of these Technical Provisions. Contractor shall obtain written approval from the property owner prior to start of any construction, if required on private property.

The Contractor shall sawcut and remove existing asphalt concrete or existing concrete driveway approach and sidewalk at locations shown in Appendix E of these Specifications, where encountered for constructing new driveway approach. The remaining asphalt or concrete pavement adjacent to new driveway approach shall be protected in-place and intact. Any damage caused by the Contractor shall be replaced at no cost to the City.

All removals shall be to the nearest existing score lines. Contractor shall walk the job with the City Inspector to mark removal limits prior to commencing work. All new score lines shall be tooled and spacing should match existing.

One foot (1') slot patch at the back of the driveway approach adjacent to existing asphalt concrete driveway shall be replaced as required with a structural section of 6" AC over 6" CMB.

The Contractor may also be directed by the Engineer to sawcut and remove existing improvements and construct four inch (4") concrete over four inch (4") CMB in parkway areas (adjoining to driveway areas) or beyond public right-of-way to match existing improvements.

New improvements shall be constructed to grades indicated on the plans and in such a manner as to match existing improvements and field condition with proper grade to form a safe and smooth riding surface.

The Contractor shall be responsible to oversee the curing of all concrete improvements to prevent graffiti damage or other unauthorized markings in new concrete surfaces. Any concrete surface deemed unacceptable to the Engineer, shall be replaced by the Contractor at no cost to the City.

Damage to any existing improvements shall be remedied by sawcutting, removal and reconstruction at the Contractor's expense and to the satisfaction of the Engineer. Removals, relocations, and/or adjustments not covered by a separate bid item but necessary for the proposed concrete construction shall be included in the unit price bid for the various items of work involved.

The Contractor shall maintain safe access to all residents/ business establishment at all times throughout the duration of the contract. The only permitted

interruption to access will be during placement of concrete. No establishment shall be denied access more than one day at a time. Contractor shall install steel plates after finishing the concrete, to provide access during the cure period. The Contractor shall pour new P.C.C. improvements in such a fashion as not to interrupt the access to residences near the job site.

Should a driveway be excavated at the end of a workday, the Contractor shall provide a temporary access ramp to residences/businesses. The temporary access ramp shall be removed by the Contractor on the following day so that driveway construction can be completed. Access to building over newly placed ramp shall be provided the day following the placement of ramp. New ramp shall be protected by the Contractor with the use of materials such as roofing paper, plywood, or other means approved by the Engineer. The cost for the placement of the temporary ramp/plate, and its removal shall be included in the unit cost bid for the various items of work involved, and no additional compensation will be allowed therefore.

All root pruning to be performed must be coordinated with the City Arborist a minimum of 2 working days in advance of scheduled work. **The Contractor shall not cut any roots without the prior consent of the City Arborist.** General guidelines set forth by the City Arborist dictate root pruning no closer to the trunk than a distance equal to 3 times the trunk diameter of well-established rooted trees, and 5 times the trunk diameter of shallow rooted trees. The locations of existing trees where tree roots are expected to be encountered are shown on the plans.

PAYMENT

Payment for **BID ITEM NO. 13 – SAWCUT & REMOVE EX. AND CONSTRUCT NEW 6" PCC DRIVEWAY PER SPPWC STD. PLAN NO. 110-2 (TYPE & SIZE PER PLAN),** shall be at the contract bid item price per square foot (SF) and shall include, sawcutting, removal and disposal of existing concrete improvements, unclassified excavation, root pruning as directed by the City Arborist, subgrade preparation, compaction, slot paving, sawcut for control joints and new PCC concrete driveway approach and integral curb and gutter, driveway transitions onto private property, and all other work as required to complete the work. No additional compensation will be allowed.

BID ITEM NO. 14 – SAWCUT & REMOVE EX. AND CONSTRUCT NEW 4" PCC SIDEWALK PER SPPWC STD. PLAN NO. 112-2

GENERAL

The work under this Bid Item shall include the following tasks.

1. Construction of 4" Concrete Sidewalk:

The Contractor shall construct new Portland cement concrete sidewalk conforming to Section 303-5 of the Standard Specifications and SPPWC Standard Plan No. 112-2, with lines and grades to meet existing.

Concrete shall be Class 520-C-2500

The Contractor may be directed to construct new concrete walkways or steps in landscaped areas and on private properties, where required.

The Contractor shall sawcut and remove existing asphalt concrete or existing concrete sidewalk within construction limits where encountered for constructing new sidewalk. The remaining asphalt or concrete pavement adjacent to new sidewalk shall be protected in-place and intact. Any damage caused by the Contractor shall be replaced at no cost to the City.

All removals shall be to the nearest existing score lines. Contractor shall walk the job with the City Inspector to mark removal limits prior to commencing work. All new score lines shall be tooled and spacing should match existing.

One foot (1') slot patch at the back of the sidewalk adjacent to existing asphalt concrete driveway shall be replaced as required with a structural section of 6" AC over 6" CMB.

The Contractor may also be directed by the Engineer to sawcut and remove existing improvements and construct four inch (4") concrete over four inch (4") CMB in parkway areas (adjoining to sidewalk areas) or beyond public right-of-way to match existing improvements.

The Contractor shall protect all existing drainage pipes and structures, and other existing improvements not designated to be removed, in-place and intact.

At all times the Contractor shall provide a safe and walkable temporary sidewalk with a minimum width of forty-eight inch (48") clearance adjoining excavated areas within parkway limits for wheelchair and pedestrians to travel around construction areas. If such clearance is not possible, barricading, plating, filling, or other measures shall be required.

2. Unclassified Excavation:

The unclassified excavation shall consist of all excavation for the construction of sidewalk. The Contractor shall also cut and remove any tree roots encountered within construction limit to at least six (6) inches below the subgrade.

Contractor shall protect and support in-place and intact all existing curb drain lines during excavation and construction.

3. Irrigation Lines and Sprinkler Heads:

The Contractor shall furnish and install all new pipe size to match existing but no

less than ½" schedule 40, PVC pipe to tie into existing pipes, new sprinkler heads equal to or better than existing, and all appurtenances. All work shall conform to Sections 212-2 and 308-5 of the Standard Specifications and as directed by the Engineer.

Any damage beyond the construction limit shall be repaired at the Contractor's expense per Section 7-9 of the Standard Specifications.

The Contractor shall cut interfering portions of existing irrigation lines and cap all ends for future reconnection.

The Contractor shall modify, relocate or replace and/or extend all encountered irrigation lines or sprinkler heads so as to give full coverage to landscape area.

All repair and replacement of the irrigation system shall be done within five (5) days or sooner after disconnection. During disconnection period of existing irrigation systems, the Contractor shall maintain the existing grass, trees, shrubs, and other existing landscape in a live condition with temporary irrigation system and/or shall water the landscaped areas by hand. Homeowner's water supply shall not be used without written consent from each homeowner.

As determined in the field by the Engineer, the Contractor may be directed to extend the existing sprinkler system or place a P.V.C. sleeve into the landscaped area between the curb and sidewalk and other locations as necessary.

Prior to accepting work, the Contractor must turn the system on, and it must work properly in the presence of and to the satisfaction of the Engineer and property owner. The Contractor, at no cost to the City, shall replace any damaged and dead grass or landscaping beyond construction limits resulting from Contractor's operation or insufficient water supplies.

4. Sod and Modified Class "A" Topsoil:

The Contractor shall furnish and place Modified Class "A" Topsoil and new sod in accordance with Section 212-1 and Section 308 of the Standard Specifications for parkways and behind the right-of-way areas. The limits of sodding shall be as indicated in this specification.

During construction, the Contractor shall protect and support existing irrigation lines and sprinkler heads in place and intact. The Contractor shall adjust them to the proper level if necessary.

Prior to performing any landscaping work, Contractor shall place a 4-inch (4") thick imported Modified Class "A" Topsoil for the top layer of landscaping area.

The Modified Class "A" Topsoil shall consist of 80% content of Class "A" Topsoil per the Standard Specifications and 20% content of processed wood product of type "I" organic soil amendment per the Standard Specifications.

The Contractor shall place new sod in the areas adjoining the newly constructed concrete improvements that were disturbed by his/her operations.

The Contractor shall also place new sod for filled and regraded areas. The Contractor may be directed by the Engineer to sod other areas as necessary in conformance with these Specifications.

The Contractor shall select the type of new sod that matches or most matches the existing sod, or as directed by the Engineer.

Upon the completion of the removal of existing concrete improvements for which no replacement is required, the Contractor shall backfill the void with Modified Class "A" Topsoil for placing new sod as directed in those respective bid items.

5. Miscellaneous Clearing and Grubbing:

The Contractor shall trim all encountered bushes, hedges, plants, and vegetation having diameters equal to or less than six inches (6") measured at eighteen inches (18") above adjacent top of curb within construction limits, as directed by the Engineer. All roots and stumps shall be removed and/or ground to six inches (6") below subgrade. Upon completion of trimming, all debris shall be cleared from the site.

6. Regrading:

Some areas adjoining to new sidewalk will be lower or higher than new sidewalk grade. At these locations the Contractor shall be required to regrade the area to a slope of 3:1 from the edge of the new sidewalk to meet existing ground.

The Contractor may be directed to regrade beyond the above ratio where necessary. Also, the Contractor shall fill all low areas to meet new or existing grade by using uncontaminated project excavation materials.

All regraded or filled areas shall receive four inch (4") thick Modified Class "A" Topsoil for placing new sod to match existing; therefore, the Contractor shall fill or excavate those areas accordingly. Sod shall be placed only where sod exists prior to cut and fill.

7. Root Pruning:

All root pruning to be performed must be coordinated with the City Arborist a minimum of 2 working days in advance of scheduled work. **The Contractor shall not cut any roots without the prior consent of the City Arborist.** General guidelines set forth by the City Arborist dictate root pruning no closer to the trunk than a distance equal to 3 times the trunk diameter of well-established rooted trees, and 5 times the trunk diameter of shallow rooted trees. The locations of existing trees where tree roots are expected to be encountered are shown on the plans.

8. Concrete Work Schedule:

The Contractor shall schedule and conduct all work such that the time between the demolition and reconstruction of the sidewalk shall be limited to **five (5) working days** for residential areas and **three (3) working days** for business areas. Sidewalks shall not remain demolished over any weekend or holiday period without consent from the Engineer.

PAYMENT

Payment for **BID ITEM NO. 14 – SAWCUT & REMOVE EX. AND CONSTRUCT NEW 4" PCC SIDEWALK PER SPPWC STD. PLAN NO. 112-2** shall be at the contract bid item price per square foot (SF) and shall include full compensation for all labor, materials, tools, equipment, and incidentals necessary to do all the work involved thereof, complete, in place, and accepted. Payment for the preceding requirements shall include:

1. Removing existing concrete sidewalk at parkway repair locations, sawcutting, clearing and grubbing, unclassified excavation, and 4" Portland cement concrete construction.

2. Restoring sprinkler systems including all reducers for different pipe sizes, and from existing or new pipes to the sprinkler heads, connection points, all fittings, all tees and ells, backfill material for pipe trench, and all miscellaneous materials for proper installation and for construction of complete sprinkler systems.

3. Furnishing and placing Modified Class "A" Topsoil and new sod.

4. Performing Miscellaneous clearing and grubbing.

5. Re-grading the areas behind the new sidewalk as stated herein.

6. Removing and replacing existing PCC improvements in the parkway or behind R.O.W. at the marked limits or as directed by the Engineer in the field.

7. Adjusting water meter boxes and pull boxes, including conduits (if required), to finished grade.

8. Protecting in-place the existing mail boxes or installing new posts and reattach.

9. Grinding existing stumps only (if trees were previously removed by others).

10. Removing miscellaneous parkway concrete, and replacing with modified class "A" topsoil.

11. Providing one foot (1') wide AC slot patch (4"AC/4"CMB) paving behind

sidewalk adjacent to asphalt concrete driveways at required locations.

12. Tree root pruning as directed and approved by the City Arborist.

No additional compensation will be allowed.

BID ITEM NO. 15 – SAWCUT & REMOVE EX. CROSS GUTTER AND CONSTRUCT PCC CROSS GUTTER PER SPPWC STD. PLAN NO. 122-3

BID ITEM NO. 16 – SAWCUT & REMOVE EX. GUTTER AND CONSTRUCT 30" GUTTER PER SPPWC STD. PLAN NO. 122-3

BID ITEM NO. 17 – SAWCUT & REMOVE EX. PCC AND AC AND CONSTRUCT PCC ALLEY INTERSECTION PER SPPWC STD. PLAN NO. 130-2

BID ITEM NO. 20 – SAWCUT & REMOVE EX. CURB AND CONSTRUCT 6" CURB PER SPPWC STD. PLAN NO. 120-3

BID ITEM NO. 21 – SAWCUT & REMOVE EX. ROLLED CURB AND CONSTRUCT ROLLED CURB TO MATCH IN-KIND

BID ITEM NO. 22 – SAWCUT & REMOVE EX. CURB AND GUTTER AND CONSTRUCT 6" CURB AND 24" GUTTER PER SPPWC STD. PLAN NO. 120-3

BID ITEM NO. 23 – SAWCUT & REMOVE EX. CURB AND GUTTER AND CONSTRUCT 6" CURB AND 30" GUTTER PER SPPWC STD. PLAN NO. 120-3

BID ITEM NO. 24 – SAWCUT & REMOVE EX. CURB AND GUTTER AND CONSTRUCT 8" CURB AND 24" GUTTER PER SPPWC STD. PLAN NO. 120-3

BID ITEM NO. 25 – SAWCUT & REMOVE EX. CURB AND CONSTRUCT 8" CURB AND 24" GUTTER PER SPPWC STD. PLAN NO. 120-3

BID ITEM NO. 26 – SAWCUT & REMOVE EX. CURB AND GUTTER AND CONSTRUCT 8" CURB AND 30" GUTTER PER SPPWC STD. PLAN NO. 120-3

BID ITEM NO. 27 – SAWCUT & REMOVE EX. CURB AND GUTTER AND CONSTRUCT 10" CURB AND 24" GUTTER PER SPPWC STD. PLAN NO. 120-3

BID ITEM NO. 28 – SAWCUT & REMOVE EX. CURB AND GUTTER AND CONSTRUCT 8" CURB AND 36" GUTTER PER SPPWC STD. PLAN NO. 120-3

BID ITEM NO. 29 – SAWCUT & REMOVE EX. LOCAL DEPRESSION AND CONSTRUCT LOCAL DEPRESSION PER SPPWC STD. PLAN NO. 313-4, MODIFIED TO MATCH EXISTING

GENERAL

The Contractor shall construct new Portland cement concrete cross gutters, local depressions and curb and gutter conforming to Section 303-5 of the Standard Specifications with lines and grades to meet existing.

Subgrade under all new cross gutters and curb and curb and gutter shall be compacted to 95 percent relative density. Also all roots and stumps shall be removed and/or ground to six (6) inches below sub-grade.

(a) Concrete Curb, Gutter, Cross gutters, Local Depressions and Alley Intersections. Concrete shall be removed to neatly sawed edges with saw cuts made to a minimum depth of 1-1/2 inches. Concrete sidewalk, access ramp or driveway to be removed shall be neatly sawed in straight lines either parallel to the curb or at right angles to the alignment of the sidewalk. No section to be replaced shall be smaller than 30 inches in either length or width.

(b) Contractor shall protect and support in-place and intact all existing curb and gutter improvements to remain, during excavation and construction.

The concrete class shall be 520-C-2500.

The work shall include replacement or relocation of any damaged irrigation lines and sprinkler heads to a condition equal to existing; and replacement of any grass damaged as a result of the construction operations with sod.

Weakened plane joints are required every ten (10) feet. Transitional curb or curb and gutter shall be five (5) feet from one type to the other. No construction joints will be permitted.

The removal of the curb or curb and gutter shall not result in any damage to adjacent sidewalk, driveway approach or other improvements unless indicated on the plans. The top of curb elevations for the proposed curb and gutter shall match the existing top of curb elevations unless otherwise indicated on the plans. Any damage to adjacent improvements will be repaired at the Contractor's expense.

Where existing red curb is removed and reconstructed, the Contractor shall paint the newly constructed curb (the curb face and top of curb) red. The paint material shall be water-base and shall be Pervo Paint, Red Curb Paint #3123 or approved equal. **Locations and lengths of red curb shall match existing locations and lengths as shown on the plans.**

Should the Contractor request and obtain permission to use admixtures for his own benefit, he shall furnish such admixtures and incorporate then in the concrete mixture at his expense, and no additional compensation will be allowed therefore.

Should the Engineer direct the Contractor to incorporate any admixtures in the concrete when their use is not required by these specifications, furnishing the admixtures and adding them to the concrete will be paid for as Extra Work as provided in Subsection 3-3, as amended by these Special Provisions.

PAYMENT

Payment for **BID ITEM NO. 15 – SAWCUT & REMOVE EX. CROSS GUTTER AND CONSTRUCT PCC CROSS GUTTER PER SPPWC STD. PLAN NO. 122-3, BID ITEM NO. 16 – SAWCUT & REMOVE EX. GUTTER AND CONSTRUCT 30" GUTTER PER SPPWC STD. PLAN NO. 122-3, BID ITEM NO. 17 – SAWCUT & REMOVE EX. PCC AND AC AND CONSTRUCT PCC ALLEY INTERSECTION PER SPPWC STD. PLAN NO. 130-2**, and **BID ITEM NO. 29 – SAWCUT & REMOVE EX. LOCAL DEPRESSION AND CONSTRUCT LOCAL DEPRESSION PER SPPWC STD. PLAN NO. 313-4, MODIFIED TO MATCH EXISTING** shall be per the unit price bid per square foot (SF) and shall include all labor, materials and equipment necessary for sawcut, removal & disposal of existing improvements, root removal, subgrade preparation, forms, P.C.C. improvements, expansion joints and details, finishing, curing, backfilling behind PCC improvements, restoring form areas, replacement of all existing landscape planting damaged by construction with plants and/or sod, as directed by the Engineer, restoring irrigation improvements damaged by construction and all other work required to complete the work. New cross gutters and alley intersections shall be constructed to provide proper flow line with existing improvements. Curb height shall vary as necessary to join existing improvements. Transitional curb and gutter shall be five (5') feet from one type to the other. No additional compensation will be allowed.

Payment for **BID ITEM NO. 20 – SAWCUT & REMOVE EX. CURB AND CONSTRUCT 6" CURB PER SPPWC STD. PLAN NO. 120-3, BID ITEM NO. 21 – SAWCUT & REMOVE EX. ROLLED CURB AND CONSTRUCT ROLLED CURB TO MATCH IN-KIND, BID ITEM NO. 22 – SAWCUT & REMOVE EX. CURB AND GUTTER AND CONSTRUCT 6" CURB AND 24" GUTTER PER SPPWC STD. PLAN NO. 120-3, BID ITEM NO. 23 – SAWCUT & REMOVE EX. CURB AND GUTTER AND CONSTRUCT 6" CURB AND 30" GUTTER PER SPPWC STD. PLAN NO. 120-3, BID ITEM NO. 24 – SAWCUT & REMOVE EX. CURB AND GUTTER AND CONSTRUCT 8" CURB AND 24" GUTTER PER SPPWC STD. PLAN NO. 120-3, BID ITEM NO. 25 – SAWCUT & REMOVE EX. CURB AND CONSTRUCT 8" CURB AND 24" GUTTER PER SPPWC STD. PLAN NO. 120-3, BID ITEM NO. 26 – SAWCUT & REMOVE EX. CURB AND GUTTER AND CONSTRUCT 8" CURB AND 30" GUTTER PER SPPWC STD. PLAN NO. 120-3, BID ITEM NO. 27 – SAWCUT & REMOVE EX. CURB AND GUTTER AND CONSTRUCT 10" CURB AND 24" GUTTER PER SPPWC STD. PLAN NO. 120-3, and BID ITEM NO. 28 – SAWCUT & REMOVE EX. CURB AND GUTTER AND CONSTRUCT 8" CURB AND**

36" GUTTER PER SPPWC STD. PLAN NO. 120-3 shall be per the unit price bid per lineal foot (LF) and shall include all labor, materials and equipment necessary for sawcut, removal & disposal of existing improvements, root removal, subgrade preparation, forms, P.C.C. improvements, expansion joints and details, finishing, curing, painting red curbs, backfilling behind curb and gutter, restoring form areas, replacement of all existing landscape planting damaged by construction with plants and/or sod, as directed by the Engineer, restoring irrigation improvements damaged by construction and all other work required to complete the work. New curb and gutter shall be constructed to provide proper flow line with existing improvements. Curb height shall vary as necessary to join existing improvements. Transitional curb and gutter shall be five (5') feet from one type to the other. Weakened plane joints are required every ten (10) feet. No additional compensation will be allowed.

BID ITEM NO. 18 – SAWCUT AND REMOVE EXISTING STEP AND CONSTRUCT PCC STEP. MATCH STEP HEIGHT OF EXISTING STEPS

GENERAL

The Contractor shall remove a portion of the existing staircase and a new step conforming to Section 303-1 of the Standard Specifications with lines and grades to meet existing and proposed improvements.

Payment for **BID ITEM NO. 18 – SAWCUT AND REMOVE EXISTING STEP AND CONSTRUCT PCC STEP. MATCH STEP HEIGHT OF EXISTING STEPS** shall be per the unit price bid per each (EA) and shall include all labor, materials and equipment necessary for sawcut, removal & disposal of existing improvements, forms, restoring form areas, replacement of all existing landscape planting damaged by construction with plants and/or sod, as directed by the Engineer, restoring irrigation improvements damaged by construction and all other work required to complete the work. No additional compensation will be allowed.

BID ITEM NO. 19 – REMOVE EXISTING CURB DRAIN AND CONSTRUCT NEW CURB DRAIN PER SPPWC STD. PLAN NO. 150-4

GENERAL

The Contractor shall remove the existing curb drain and construct new curb drains conforming to Section 303-5.1.2 of the Standard Specifications with lines and grades to meet existing.

The work shall include replacement or relocation of any damaged irrigation lines and sprinkler heads to a condition equal to existing; and replacement of any grass damaged as a result of the construction operations with sod.

Payment for **BID ITEM NO. 19 – REMOVE EXISTING CURB DRAIN AND CONSTRUCT NEW CURB DRAIN PER SPPWC STD. PLAN NO. 150-4** shall be per the unit price bid per each (EA) and shall include all labor, materials and equipment necessary for sawcut, removal & disposal of existing improvements, root removal, subgrade preparation, forms, coupling to existing curb drain, backfilling behind curb and gutter, restoring form areas, replacement of all existing landscape planting damaged by construction with plants and/or sod, as directed by the Engineer, restoring irrigation improvements damaged by construction and all other work required to complete the work. The new curb drain shall be constructed to provide proper flow line with existing improvements. No additional compensation will be allowed.

BID ITEM NO. 30 – REMOVE TREE ROOTS PER CITY ARBORIST'S DIRECTION

All root pruning and tree removals to be performed must be coordinated with the City Arborist a minimum of 2 working days in advance of scheduled work. **The Contractor shall not cut any roots or remove any trees without the prior consent of the City Arborist.** General guidelines set forth by the City Arborist dictate root pruning no closer to the trunk than a distance equal to 3 times the trunk diameter of well-established rooted trees, and 5 times the trunk diameter of shallow rooted trees. The locations of existing trees where tree roots are expected to be encountered are shown on the plans.

BID ITEM NO. 31 – CONSTRUCT 3" CMB

GENERAL

Crushed Miscellaneous Base (CMB) shall conform to the provisions of Section 301-2 of the Standard Specifications and shall be performed as required per Typical Sections and details shown on the Plans, or as directed by the Engineer.

PAYMENT

Payment for **BID ITEM NO. 31 – CONSTRUCT 3" CMB** shall be at the contract unit price bid per Ton (TON) based upon **certified weigh master tickets** constructed in place, and shall include full compensation for all labor, materials, tools, equipment, warranty, and incidentals necessary to complete the work involved, complete, in place, and accepted. No additional compensation will be allowed therefore.

BID ITEM NO. 32 – COLD MILL TO A DEPTH OF 1.5"

BID ITEM NO. 33 – COLD MILL TO A DEPTH OF 2"

GENERAL

Cold Milling shall conform to the provisions of Section 404 of the Standard Specifications and shall be performed as required per Typical Sections and details shown on the Plans, or as directed by the Engineer.

Residue from cold milling AC or grinding of existing gutter shall not be permitted to flow or travel into gutters, onto adjacent street surfaces or parkways. All residues shall be completely removed by an acceptable or approved automated sweeper and disposed of the same day of the milling. All materials to be removed as indicated on the plans shall be disposed of outside of right-of-way at a legal dump site and as specified in Subsection 404-8 of the Standard Specifications.

PAYMENT

Payment for **BID ITEM NO. 32 – COLD MILL TO A DEPTH OF 1.5"** and **BID ITEM NO. 33 – COLD MILL TO A DEPTH OF 2"** shall be at the contract bid item price per square foot (SF), including removal and disposal of petromat/pavement reinforcing fabric, and disposal of residue, asphalt concrete surfacing, hauling, furnishing the asphalt concrete for and constructing, maintaining, removing, and disposing of temporary asphalt concrete tapers as specified in these special provisions and as directed by the Engineer, and all labor, tools, equipment and materials required to complete the work per the details shown on the plans, complete in place and as accepted by the Engineer. **The quantity to be paid for will be the actual area of surface cold planed, irrespective of number for passes required to obtain the depth shown on the plans. No additional compensation shall be allowed.**

BID ITEM NO. 34 – SAWCUT AND REMOVE EXISTING AC, MACADAM, AND SUBGRADE. CONSTRUCT 6" FULL-DEPTH AC REPAIR

GENERAL

Removals shall conform to Sections 300-2 and 401 of the Standard Specifications, per Typical Sections and details as shown on the plans, and shall include sawcutting and removing AC pavement, macadam, aggregate base, and subgrade to a depth of 6" below proposed finished grade.

Trenching and trench backfill is not a part of this bid item.

Asphalt concrete shall conform to Section 302-5 of the Standard Specifications; Sub-grade preparation shall conform to Section 301-1 of the Standard Specifications, per Typical Sections and details as shown on the plans, and shall

conform to the following:

Asphalt Concrete (AC) for full depth AC repairs and slot paving, shall be 4" Type B-PG 64-10 and 2" Type C-PG 64-10.

Finished surface of the new pavement at the edge of gutter shall be:

a. 1/4" higher than edge of gutter for streets without bike lanes, and
b. flush with edge of gutter for streets with bike lanes and within ADA path of travel and/or crosswalk areas.

The Contractor shall be responsible for maintaining location of and access to, all water line gate valves during construction.

Prior to placing asphalt concrete, all existing surfaces shall be cleaned by air-blow, water and/or hand broom. All striping, markings and raised pavement markers shall be removed by grinding or by some other approved method before placing asphalt concrete surface course, and skin patching. The surface shall be free of water, dust, and foreign materials before tack coat is applied.

Asphalt concrete shall be compacted to achieve at least 95 percent of the relative compaction.

The Contractor shall feather new asphalt concrete as required by the Engineer at join locations, to form a smooth transition with existing pavement.

All work shall be performed to the satisfaction of the Engineer.

Tack Coat:

Tack coat shall be per Section 302-5.4 of the Greenbook.

At all locations where new asphalt concrete pavement is joining or overlaying existing asphalt pavement, the Contractor shall sawcut existing pavement to provide straight neat lines and transition last twenty (20) feet of new pavement to form a smooth transition with the existing pavement.

Rolling:

Initial or breakdown compaction shall consist of a minimum of three coverages of a layer of asphalt mixture. A pass shall be a movement of a roller in both directions over the same path. A coverage shall be as many passes as are necessary to cover the entire width being paved. Overlap between passes during any coverage made to insure compaction without displacement of material, in accordance with good rolling practice, shall be considered a part of the coverage being made and not a part of a subsequent coverage.

Each coverage shall be completed before subsequent coverages are started.

Pneumatic rollers shall not be used without prior approval of the Engineer. The top layer of each lane, once commenced, shall be placed without interruption. The Contractor shall roll the newly laid asphalt concrete in such a manner that will not create a joint between two passes; variations at joints shall be no greater than 1/8". If such joint exists, the Contractor shall be required to replace or repair that section as directed by the Engineer at no cost to the City. Six (6) inches of newly laid asphalt concrete to be joined by an adjacent pass shall not be rolled until adjacent pass has been laid.

At all locations where new asphalt concrete pavement is joining or overlaying existing asphalt pavement, the Contractor shall sawcut existing pavement to provide straight neat lines and transition last twenty (20) feet of new pavement to form a smooth transition with the existing pavement.
½" to 1½" AC leveling course shall conform to the provisions of Section 203 and 302 of the Standard Specifications and shall be constructed to the limits shown on the improvement plans made part of these specifications.

PAYMENT

Payment for **BID ITEM NO. 34 – SAWCUT AND REMOVE EXISTING AC, MACADAM, AND SUBGRADE. CONSTRUCT 6" FULL-DEPTH AC REPAIR** shall be at the contract unit price bid per ton (TON) based upon **certified weigh master tickets**. The unit price shall include all surface preparation, compaction, tack coat, and all labor, tools, equipment materials, and incidentals required to complete the work. No additional compensation will be allowed.

BID ITEM NO. 35 – CONSTRUCT 2.5" AC PAVEMENT (TYPE B-PG 64-10)

BID ITEM NO. 36 – CONSTRUCT 1.5" AC PAVEMENT (TYPE C2-PG 64-10)

BID ITEM NO. 37 – CONSTRUCT 2" AC PAVEMENT (TYPE C2-PG 64-10)

GENERAL

Asphalt concrete shall conform to Section 302-5 of the Standard Specifications; Sub-grade preparation shall conform to Section 301-1 of the Standard Specifications, per Typical Sections and details as shown on the plans, and shall conform to the following:

Asphalt Concrete (AC) for full depth AC repairs and slot paving, shall be 4" Type B-PG 64-10 and 2" Type C-PG 64-10.

Asphalt Concrete (AC) for base course shall be Type B-PG 64-10.

Asphalt Concrete (AC) for final course shall be Type C2-PG 64-10.

Finished surface of the new pavement at the edge of gutter shall be:

a. 1/4" higher than edge of gutter for streets without bike lanes, and
b. flush with edge of gutter for streets with bike lanes and within ADA path of travel and/or crosswalk areas.

The Contractor shall be responsible for maintaining location of and access to, all water line gate valves during construction.

Prior to placing asphalt concrete, all existing surfaces shall be cleaned by air-blow, water and/or hand broom. All striping, markings and raised pavement markers shall be removed by grinding or by some other approved method before placing asphalt concrete surface course, and skin patching. The surface shall be free of water, dust, and foreign materials before tack coat is applied.

Asphalt concrete shall be compacted to achieve at least 95 percent of the relative compaction.

The Contractor shall feather new asphalt concrete as required by the Engineer at join locations, to form a smooth transition with existing pavement.

All work shall be performed to the satisfaction of the Engineer.

Tack Coat:

Tack coat shall be per Section 302-5.4 of the Greenbook.

At all locations where new asphalt concrete pavement is joining or overlaying existing asphalt pavement, the Contractor shall sawcut existing pavement to provide straight neat lines and transition last twenty (20) feet of new pavement to form a smooth transition with the existing pavement.

Rolling:

Initial or breakdown compaction shall consist of a minimum of three coverages of a layer of asphalt mixture. A pass shall be a movement of a roller in both directions over the same path. A coverage shall be as many passes as are necessary to cover the entire width being paved. Overlap between passes during any coverage made to insure compaction without displacement of material, in accordance with good rolling practice, shall be considered a part of the coverage being made and not a part of a subsequent coverage.

Each coverage shall be completed before subsequent coverages are started.

Pneumatic rollers shall not be used without prior approval of the Engineer. The top layer of each lane, once commenced, shall be placed without interruption. The Contractor shall roll the newly laid asphalt concrete in such a manner that will not create a joint between two passes; variations at joints shall be no greater than 1/8". If such joint exists, the Contractor shall be required to replace or repair that section as directed by the Engineer at no cost to the City. Six (6) inches of newly laid asphalt concrete to be joined by an adjacent pass shall not be rolled until adjacent pass has been laid.

At all locations where new asphalt concrete pavement is joining or overlaying existing asphalt pavement, the Contractor shall sawcut existing pavement to provide straight neat lines and transition last twenty (20) feet of new pavement to form a smooth transition with the existing pavement.
½" to 1½" AC leveling course shall conform to the provisions of Section 203 and 302 of the Standard Specifications and shall be constructed to the limits shown on the improvement plans made part of these specifications.

PAYMENT

Payment for **BID ITEM NO. 35 – CONSTRUCT 2.5" AC PAVEMENT (TYPE B-PG 64-10)**, **BID ITEM NO. 36 – CONSTRUCT 1.5" AC PAVEMENT (TYPE C2-PG 64-10)**, and **BID ITEM NO. 37 – CONSTRUCT 2" AC PAVEMENT (TYPE C2-PG 64-10)** shall be at the contract unit price bid per ton (TON) based upon **certified weigh master tickets**. The unit price shall include all surface preparation, compaction, tack coat, and all labor, tools, equipment, materials, and incidentals required to complete the work. No additional compensation will be allowed.

BID ITEM NO. 38 – SALVAGE EX. HPS LUMINAIRE ASSEMBLY, FURNISH & INSTALL NEW LED LUMINAIRE ASSEMBLY

GENERAL
All work associated with the furnishing, removals and installation of street lighting luminaries shall conform to Caltrans Standard Specifications Section 86 "General" and Section 87 "Electrical Systems."

The Contractor shall remove the existing HPS cobra head as noted on the project plans. Materials removed shall be inventoried. The Contractor shall coordinate with City staff and materials selected by the City shall be salvaged and delivered back to the City. Any and all remaining materials shall become the property of the Contractor. Disposal of any and all material salvaged to the Contractor shall be in conformance with all applicable City, State and Federal regulations. Salvaged materials shall not be stockpiled in the public right of way.

Installation of new LED Cobra Head Assembly shall include furnishing materials, labor, equipment and any miscellaneous appurtenances required to provide

achieve the intended function of the new LED Luminaire Assembly. The new luminaire assembly shall be LEOTEK Green Cobra Model No. GCM1-60J-MV-30K-3R-GY-090-PCR7-CR or City approved equal. Included in the materials and installation for each assembly shall be new photo cell control or shorting cap as directed by the City, mounting hardware, replacement or conductors as needed, and any other modifications necessary to complete the installation conforming to the manufacturer requirements and applicable sections of the Caltrans Standard Specifications.

The Contractor shall coordinate all work with SCE, including completing applicable request for lamp changes or other notices or request documents as required by the utility. The City will assist coordination as required, however the Contractor shall be the primary point of contact and be responsible for coordinating and managing all aspects of the SCE coordination process.

PAYMENT

Payment of the requirements of **BID ITEM NO. 38 – SALVAGE EXISTING HPS LUMINAIRE ASSEMBLY, FURNISH AND INSTALL NEW LED LUMINAIRE ASSEMBLY** shall be included in the Contract per each (EA) price bid, and shall include full compensation for all labor, tools, materials, equipment and incidentals required to complete the work, complete in place, including furnishing and installing new LED cobra head assembly, removal and salvage of existing cobra head assembly, and any other miscellaneous appurtenances to complete the work as shown on the plans and specified in the Specifications and these Special Provisions, and as directed by the Engineer. No additional compensation shall be allowed.

BID ITEM NO. 39 – SALVAGE LUMINAIRE AND INSTALL NEW DECORATIVE LED LUMINAIRE ON MILAN AVE

GENERAL

All work associated with the furnishing, removals and installation of street lighting luminaries shall conform to Caltrans Standard Specifications Section 86 "General" and Section 87 "Electrical Systems."

All work shall be performed by South Coast Lighting & Design or approved equal.

Contact information:
South Coast Lighting & Design
1101 Via Callejon
San Clemente, CA 92673
Attn: Kevin Parker
kevinp@southcoastlighting.com
Cell: (714) 981-0850

The lighting contractor shall hold a C61/D64 Light Pole Restoration License.

The Contractor shall remove the existing luminaire as noted on the project plans. Materials removed shall be inventoried. The Contractor shall coordinate with City staff and materials selected by the City shall be salvaged and delivered back to the City. Any and all remaining materials shall become the property of the Contractor. Disposal of any and all material salvaged to the Contractor shall be in conformance with all applicable City, State and Federal regulations. Salvaged materials shall not be stockpiled in the public right of way.

Installation of new 18A Post Top LED Lamp Assembly shall include furnishing materials, labor, equipment and any miscellaneous appurtenances required to provide achieve the intended function of the new LED Luminaire Assembly. The new luminaire assembly shall be Keystone Direct Drive HID LED Model No. KT-LET54PSHID-EX39-8XX-D/G4 or City approved equal. Included in the materials and installation for each assembly shall be new photo cell control or shorting cap as directed by the City, mounting hardware, replacement or conductors as needed, and any other modifications necessary to complete the installation conforming to the manufacturer requirements and applicable sections of the Caltrans Standard Specifications.

PAYMENT

Payment of the requirements of **BID ITEM NO. NO. 39 – SALVAGE LUMINAIRE AND INSTALL NEW DECORATIVE LED LUMINAIRE ON MILAN AVE** shall be included in the Contract per each (EA) price bid, and shall include full compensation for all labor, tools, materials, equipment and incidentals required to complete the work, complete in place, including furnishing and installing new LED top head assembly, removal and salvage of existing top head assembly, and any other miscellaneous appurtenances to complete the work as shown on the plans and specified in the Specifications and these Special Provisions, and as directed by the Engineer. No additional compensation shall be allowed.

BID ITEM NO. 40 – REMOVE AND REPLACE ALL STREET LIGHT LENSES ON MILAN AVE

GENERAL

All work associated with the furnishing, removals and installation of decorative street light lenses shall conform to Caltrans Standard Specifications Section 86 "General" and Section 87 "Electrical Systems."

All work shall be performed by South Coast Lighting & Design or approved equal.

Contact information:
South Coast Lighting & Design
1101 Via Callejon
San Clemente, CA 92673

Attn: Kevin Parker
kevinp@southcoastlighting.com
Cell: (714) 981-0850

The lighting contractor shall hold a C61/D64 Light Pole Restoration License.

The Contractor shall remove the existing luminaire as noted on the project plans. Materials removed shall be inventoried. The Contractor shall coordinate with City staff and materials selected by the City shall be salvaged and delivered back to the City. Any and all remaining materials shall become the property of the Contractor. Disposal of any and all material salvaged to the Contractor shall be in conformance with all applicable City, State and Federal regulations. Salvaged materials shall not be stockpiled in the public right of way.

Installation of new polycarbonate or acrylic lenses shall include furnishing materials, labor, equipment and any miscellaneous appurtenances required to remove and dispose the existing lenses, install new lenses cut to the appropriate size, and any other modifications necessary to complete the installation conforming to the manufacturer requirements and applicable sections of the Caltrans Standard Specifications.

PAYMENT
Payment of the requirements of **BID ITEM NO. 40 – REMOVE AND REPLACE ALL STREET LIGHT LENSES ON MILAN AVE** shall be included in the Contract per each (EA) price bid, and shall include full compensation for all labor, tools, materials, equipment and incidentals required to complete the work, complete in place, including furnishing and installing new lenses for the entire light fixture, removal and disposal of existing lenses, and any other miscellaneous appurtenances to complete the work as shown on the plans and specified in the Specifications and these Special Provisions, and as directed by the Engineer. No additional compensation shall be allowed.

BID ITEM NO. 41 – REMOVE LOOSE AND FLAKING COATINGS, LOOSE AND FLAKING RUST, AND OTHER FOREIGN SURFACE CONTAMINANTS. SAND AND REPAINT UNION METAL POLE ON MILAN AVE

GENERAL
All work associated with the restoration of the union metal light poles shall conform to Caltrans Standard Specifications Section 86 “General” and Section 87 “Electrical Systems.”

All work shall be performed by South Coast Lighting & Design or approved equal.

Contact information:
South Coast Lighting & Design

1101 Via Callejon
San Clemente, CA 92673
Attn: Kevin Parker
kevinp@southcoastlighting.com
Cell: (714) 981-0850

The lighting contractor shall hold a C61/D64 Light Pole Restoration License.

The Contractor shall remove signs and straps prior to surface preparation. The Contractor shall treat and prepare surfaces by removing visibly loose and flaky coatings, loose and flaky rust and other foreign surface contaminants. Poles will not be completely stripped, but removal of up to approximately 20% of existing surfaces may need paint removal. Removal will be accomplished by any combination of methods including but not limited to hand scraping, sanding, power tool cleaning, grinding, needle guns and laser removal. Surfaces to be re-coated will be hand sanded as necessary to maximize success at achieving the most aesthetically pleasing finish. Any and all remaining materials shall become the property of the Contractor. Disposal of any and all material salvaged to the Contractor shall be in conformance with all applicable City, State and Federal regulations. Salvaged materials shall not be stockpiled in the public right of way.

After surface preparation is completed, wipe surfaces with a liquid cleaner/solvent to remove remaining surface contaminants and dust as necessary. Bronze fixtures shall be masked off and/or protected as necessary to prevent contamination from overspray.

Coatings shall be applied using a modified HVLP automotive paint sprayer unless there is a potential for overspray. Use a brush or roller in problematic areas or if overspray is a concern.

Apply Amerlock 2 VOC Epoxy Primer, Macropoxy 646 Fast Cure Epoxy Mastic, PSX 700 Siloxane coating, Sher-Loxane 800 polysiloxane as recommended by South Coast Lighting & Design and manufacturers' recommendations.

PAYMENT

Payment of the requirements of **BID ITEM NO. NO. 41 – REMOVE LOOSE AND FLAKING COATINGS, LOOSE AND FLAKING RUST, AND OTHER FOREIGN SURFACE CONTAMINANTS. SAND AND REPAINT POLE ON MILAN AVE** shall be included in the Contract per each (EA) price bid, and shall include full compensation for all labor, tools, materials, equipment and incidentals required to complete the work, complete in place, including removal of loose paint and rust, sanding, and repainting light poles, and any other miscellaneous appurtenances to complete the work as shown on the plans and specified in the Specifications and these Special Provisions, and as directed by the Engineer. No additional compensation shall be allowed.

BID ITEM NO. 42 – STRIP ENTIRE POLE. SAND AND REPAINT KING STANDARD POLE ON MILAN AVE

GENERAL

All work associated with the restoration of the king standard light poles shall conform to Caltrans Standard Specifications Section 86 "General" and Section 87 "Electrical Systems."

All work shall be performed by South Coast Lighting & Design or approved equal.

Contact information:
South Coast Lighting & Design
1101 Via Callejon
San Clemente, CA 92673
Attn: Kevin Parker
kevinp@southcoastlighting.com
Cell: (714) 981-0850

The lighting contractor shall hold a C61/D64 Light Pole Restoration License.

The Contractor shall remove signs and straps prior to surface preparation. The poles shall be completely stripped. Stripping will be accomplished by any combination of methods, including but not limited to hand scraping, grinding, power tool cleaning, needle guns and laser paint removal. Surfaces to be re-coated will be hand sanded as necessary to maximize success at achieving the most aesthetically pleasing finish. Any and all remaining materials shall become the property of the Contractor. Disposal of any and all material salvaged to the Contractor shall be in conformance with all applicable City, State and Federal regulations. Salvaged materials shall not be stockpiled in the public right of way.

After surface preparation is completed, wipe surfaces with a liquid cleaner/solvent to remove remaining surface contaminants and dust as necessary. Bronze fixtures shall be masked off and/or protected as necessary to prevent contamination from overspray.

Coatings shall be applied using a modified HVLP automotive paint sprayer unless there is a potential for overspray. Use a brush or roller in problematic areas or if overspray is a concern.

Apply Amerlock 2 VOC Epoxy Primer, Macropoxy 646 Fast Cure Epoxy Mastic, PSX 700 Siloxane coating, Sher-Loxane 800 polysiloxane as recommended by South Coast Lighting & Design and manufacturers' recommendations.

PAYMENT

Payment of the requirements of **BID ITEM NO. NO. 42 – STRIP ENTIRE POLE. SAND AND REPAINT KING STANDARD POLE ON MILAN AVE**

shall be included in the Contract per each (EA) price bid, and shall include full compensation for all labor, tools, materials, equipment and incidentals required to complete the work, complete in place, including stripping, sanding, and repainting light poles, and any other miscellaneous appurtenances to complete the work as shown on the plans and specified in the Specifications and these Special Provisions, and as directed by the Engineer. No additional compensation shall be allowed.

BID ITEM NO. 43 – REPAIR AND REPAINT DAMAGED STREET LIGHT FINIALS ON MILAN AVE

GENERAL

All work associated with the repair and repainting of damaged street light finials shall conform to Caltrans Standard Specifications Section 86 "General" and Section 87 "Electrical Systems."

All work shall be performed by South Coast Lighting & Design or approved equal.

Contact information:
South Coast Lighting & Design
1101 Via Callejon
San Clemente, CA 92673
Attn: Kevin Parker
kevinp@southcoastlighting.com
Cell: (714) 981-0850

The lighting contractor shall hold a C61/D64 Light Pole Restoration License.

The Contractor shall repair bent and damaged finials. Any and all remaining materials shall become the property of the Contractor. Disposal of any and all material salvaged to the Contractor shall be in conformance with all applicable City, State and Federal regulations. Salvaged materials shall not be stockpiled in the public right of way.

After surface preparation is completed, wipe surfaces with a liquid cleaner/solvent to remove remaining surface contaminants and dust as necessary.

Coatings shall be applied using a modified HVLP automotive paint sprayer unless there is a potential for overspray. Use a brush or roller in problematic areas or if overspray is a concern.

Apply oxidizing bronze patina finish as recommended by South Coast Lighting & Design and manufacturers' recommendations.

PAYMENT

Payment of the requirements of **BID ITEM NO. NO. 43 – REPAIR AND REPAINT DAMAGED STREET LIGHT FINIALS ON MILAN AVE** shall be included in the Contract per each (EA) price bid, and shall include full compensation for all labor, tools, materials, equipment and incidentals required to complete the work, complete in place, including repairing and repainting street light finials, and any other miscellaneous appurtenances to complete the work as shown on the plans and specified in the Specifications and these Special Provisions, and as directed by the Engineer. No additional compensation shall be allowed.

BID ITEM NO. 44 – FURNISH AND INSTALL NEW POLE ON EXISTING FOUNDATION. UTILIZE EXISTING ANCHOR BOLTS AND WIRING

GENERAL

All work associated with the furnishing, removals and installation of street lights shall conform to Caltrans Standard Specifications Section 86 "General" and Section 87 "Electrical Systems."

All work shall be performed by South Coast Lighting & Design or approved equal.

Contact information:
South Coast Lighting & Design
1101 Via Callejon
San Clemente, CA 92673
Attn: Kevin Parker
kevinp@southcoastlighting.com
Cell: (714) 981-0850

The lighting contractor shall hold a C61/D64 Light Pole Restoration License.

The Contractor shall install a new light pole, lamp, and luminaire on the existing street light foundation as noted on the project plans. Any and all removed materials shall become the property of the Contractor. Disposal of any and all material salvaged to the Contractor shall be in conformance with all applicable City, State and Federal regulations. Salvaged materials shall not be stockpiled in the public right of way.

The existing anchor bolts shall be straightened and restored for reuse with the new light pole. The existing conductors can be reused.

The light shall be a South Coast Lighting & Design model KL-MTA-12 pole with a 18A post top luminaire and 18A post top LED lamp. The light pole shall be painted to match the other poles on Milan Avenue

The new luminaire assembly shall be Keystone Direct Drive HID LED Model No.

KT-LET54PSHID-EX39-8XX-D/G4 or City approved equal.

PAYMENT

Payment of the requirements of **BID ITEM NO. NO. 44 – FURNISH AND INSTALL NEW POLE ON EXISTING FOUNDATION. UTILIZE EXISTING ANCHOR BOLTS AND WIRING** shall be included in the Contract per each (EA) price bid, and shall include full compensation for all labor, tools, materials, equipment and incidentals required to complete the work, complete in place, including furnishing and installing the new pole, luminaire, and LED top head assembly, restoring the existing anchor bolts, and any other miscellaneous appurtenances to complete the work as shown on the plans and specified in the Specifications and these Special Provisions, and as directed by the Engineer. No additional compensation shall be allowed.

BID ITEM NO. 45 – SIGNING AND STRIPING

GENERAL

The Standard Specifications, State of California, Department of Transportation, Division of Highways (2018 edition) shall be used for all the work specified in these sections.

All signing and striping shall conform to the California Manual on Uniform Traffic Control Devices (CA MUTCD) (2014 edition, revision 8).

All conflicting striping and pavement marking shall be removed per **Cal/OSHA** Standards Rules.

Contractor shall completely install the cat-track/layout of the proposed striping and contact Traffic Engineering within 24 hours. The City Traffic Engineer and/or the designee will review and approve the cat-track/layout of the proposed striping in five (5) working days after the Contractor's notification. The final installation of the pavement striping and markings shall be completed by the Contractor within 72 hours after receiving the City Traffic Engineer's and/or the designee's approval of the cat-track/layout of the proposed striping.

All Pavement Striping and Marking shall be **Thermoplastic**. All White and Yellow longitudinal pavement stripe/markings shall be done with **Long Ribbon Striper.**

The cost of furnishing and installing signs, stripes, and markings, including mounting provisions, and all incidentals shall be considered included in the Contract lump sum price bid for **BID ITEM NO. 45 – SIGNING AND STRIPING**.

SECTION 82 – SIGNS AND MARKERS

Section 82 of the California State Standard Specifications with the following additions shall apply:

In addition to those items in California Stare Standard Specifications, payment for relocating existing traffic signs and constructing new traffic signs and posts shall be included in the contract lump sum price bid for **BID ITEM NO. 45 – SIGNING AND STRIPING**, and no additional compensation will be allowed. All new or relocated traffic signs shall be installed on two (2) inch square Telespar posts or banded on street light poles.

SECTION 84 - MARKINGS

Section 84 of the California State Standard Specifications with the following additions shall apply:

All traffic striping, markings, and all other directional information that is eliminated due to construction shall be repainted and/or replaced by the Contractor as directed by the Engineer.

Temporary or alterations to the existing traffic striping and markings shall be removed by wet sandblasting (or by other approved methods) when they are no longer required.

All existing traffic striping and markings which will conflict with the new traffic striping and markings shall be removed by wet sandblasting (or by other approved methods). (See Section 84-9.03B, "Remove Traffic Stripes and Pavement Markings").

Traffic striping and markings plan shall supersede the "California State Standard Specifications." All other striping, pavement markers, and curb markings not designated on the plans shall be done in accordance with the "2018 California State Standard Specifications."

Layout, Alignment and Spotting

A minimum of 48 hours prior to permanent application, the layout spotted in advance shall be approved by the Engineer. All new traffic striping shall join existing traffic striping.

Application (Traffic Striping)

Traffic stripes shall be applied in accordance with the requirements specified for applying traffic stripes, pavement markings, and legends.

Measurement and Payment

In addition to items specified in the California Stare Standard Specifications, all

costs for temporary pavement painting and detour traffic control for the convenience of the Contractor, including costs for the removal by wet sandblasting of existing and/or temporary markings that conflict with final traffic markings shall be included in various items that requires the work and no additional payment will be made to the Contractor.

The traffic striping and markings shall include any additional traffic striping required to join existing traffic striping, placement of all raised pavement markers including blue pavement markers for fire hydrant locations.

Stencils
Stencils and the use thereof shall conform to the following requirements:

All Stenciling shall match City of South Pasadena stencils.

Working Hours and Lane Closure Instructions
Street painting to include lines, legends, cross walks, and all associated preparatory and protective activity and devices shall be allowed only during 9:00 a.m. to 4:00 p.m., except for the following special restrictions, unless otherwise approved or directed by the Engineer:

Legend painting of major and primary arterial streets (three thru travel lanes) shall allow for two (2) thru lanes in each direction to remain open at all times.

Legend painting on primary and secondary arterial streets (two thru travel lanes) shall allow for one (1) thru travel lane in each direction to remain open at all times.

All single left turn lane closures for legend painting shall be properly signed for "NO LEFT TURN".

All dual left turn lane closures shall allow for one lane to remain open at all times.

Remove Traffic Stripes and Pavement Markings
This section is modified as follows:

Traffic stripes and pavement markings shall be removed to the fullest extent possible from pavement by wet sandblasting. Sand deposited on pavement as markings are removed shall be cleaned up by a street sweeper, all sidewalk areas shall be kept clean of all removal sand that accumulates and might interfere with or constitute a hazard to vehicular traffic or pedestrian travel.

Payment for the requirements of Sandblasting Conflicting Traffic Striping including all labor, materials, and equipment necessary to complete the work shall be included in the contract lump sum price bid for **BID ITEM NO. 45 – SIGNING AND STRIPING**, and no additional compensation will be allowed.

SECTION 81 – MISCELLANEOUS TRAFFIC CONTROL DEVICES

Section 81 of the California Standard Specifications with the following additions shall apply:

Description
The work to be done shall consist of furnishing and placing pavement markers, of the types designated, as shown on the plans or where directed by the Engineer.

Type B (Blue) - Reflective, two-way blue markers shall be installed as directed by the Engineer in line to each fire hydrant.

Type of Pavement Markers
The type of pavement markers to be supplied and installed for this project shall be:

Type A:	Non-Reflective, White
Type B:	Blue-Reflective, Two-Way Blue
Type D:	Reflective, Two-Way Yellow
Type G:	Reflective, One-Way Clear

Sampling, Tolerances and Packaging
The testing requirements shall be amended as follows:

1. In lieu of physical testing in the manner of and as prescribed by these Sections, the Contractor shall submit to the Engineer a certification provided by the Supplier that the reflective pavement markers are in conformance to the requirements of these Sections of the Standard Specifications.

Placement
1. The pavement markers shall be cemented to the pavement with Bitumen Marker adhesive, including area where the markers are protected from all traffic.

2. Pavement markers will be placed on a line established by the Engineer. The line will be the painted channelization placed on the street after the completion of the pavement work. Markers shall be placed a minimum of 14 days after surface course of asphalt concrete pavement has been placed.

All additional work necessary to establish lines for the markers shall be performed by the Contractor, including correction of minor irregularities in the line established by the Engineer.

3. The Contractor shall, at the time of preconstruction meeting, be prepared to submit to the Engineer a schedule of values for the lump sum work for Bid Item No. 27, and an implementation plan for the marker installation, for review and approval. The plan shall include, but not be limited to, the days and hours

that the markers will be installed, and any lane closures proposed by the Contractor for the marker installation. If lane closures and/or traffic detouring is proposed, a schematic drawing denoting method and signing shall accompany the implementation plan.

Payment

Payment of the requirements of **BID ITEM NO. 45 – SIGNING AND STRIPING**, shall be included in the Contract LUMP SUM (LS) price bid, and shall include full compensation for all labor, tools, materials, equipment and incidentals required to complete the work, complete in place, including furnishing and placing pavement markers, including Type B (blue) pavement markers, adhesives, thermoplastic striping and markings, red curb painting, new signs and posts, as shown on the plans and specified in the Specifications and these Special Provisions, and as directed by the Engineer. No additional compensation shall be allowed. **The Contractor shall submit a schedule of values for the lump sum work at the preconstruction meeting**.

BID ITEM NO. 46 – REMOVE AND REPLACE 8" VCP SEWER (PIPELINE POINT REPAIR)

GENERAL

Removal and replacement of the sewer line shall conform to the provisions of Section 500-4 of the Standard Specifications and shall be performed as required per Typical Sections and details shown on the Plans, or as directed by the Engineer.

A sewer bypass is required if other construction means, such as a temporary plug, is not adequate. 12 residences on Edgewood Drive between Milan Avenue and Chelten Way are connected to the sewer.

Trenching for Sewer Lines: Trenching and excavation shall include, without classifications, the sawcut, removal and disposal of all materials of whatever nature encountered, including all asphalt, macadam, P.C.C., petromat/pavement reinforcing fabric, or other obstructions of every nature that would interfere with the proper execution and completion of the work. The Contractor shall furnish, place and maintain all supports, sheeting and shoring as set forth in the rules, orders and regulations of the Division of Industrial Safety of the State of California. The Contractor shall supply all pumping, ditching or other approved measure to affect the removal or exclusion of water, storm water and/or waste water reaching the site of the work from any source so as to prevent damage to the work. All such removal of water shall be conducted in accordance and compliance with the requirements of the Los Angeles Regional Water Quality Control Board. The costs for all trenching, sheeting, shoring, excavation, dewatering, sawcut, disposal, trench resurfacing, and related items shall be

included in the unit price bid amount for the ductile iron pipe and appurtenances.

Trench Width: Unless otherwise shown, all trenches shall have vertical sides and shall have a minimum width equal to the outside diameter of the pipe plus 12" and a maximum width equal to the outside of the pipe plus 24". Pavement replacements shall be as per trench details as shown on plans.

Water Pollution and Drainage Control: The Contractor shall comply with subsections 7-8.6 and 7-8.7 of the Standard Specifications. The Contractor shall not permit muddy or polluted water to enter a catch basin or drainage channel.

Pumping: All excavations shall be kept free of water while concrete or pipe is being placed and until concrete has attained its initial set to eliminate any possible damage from such water. Any water accumulations in excavations from any source whatsoever shall be removed by the Contractor at his own expense. Waste water shall be disposed of in compliance with all Los Angeles Regional Water Quality Control Board requirements and in such a manner that it will not cause any damage to public or private property or will not be a menace or inconvenience to the public. This article does not construe that ground water is present. Field investigations have not been made to obtain water table depth.

Excess Excavated Material: Excess excavated material shall be removed from the site and disposed of by the Contractor at a legal dump site, at his own expense. Excavated material shall be removed from the job site at the end of the work week. Failure to do so will result in the City removing material at the Contractor's expense. Cost shall be calculated at actual cost for labor and equipment plus overhead and benefits plus 125 percent administrative charges.

Preparation of Pipe and Structure Foundations: Bedding shall be placed as specified per details on the plans, and in conformance with City Standards and Specifications. The pipe shall be supported uniformly throughout its length. Bridging or mounding shall not be permitted.

Backfilling and Compacting: All excavations shall be backfilled to the level of the original ground or roadway surface unless otherwise shown on the plans or ordered by the Engineer.

Trench backfill, including the area from 12” above the top of pipe to the bottom of the roadway structural section, shall be backfilled with suitable native materials or crushed aggregate base materials, compacted to 90% of maximum density, in conformance with LACWD Standard Plan W-46 as modified per Appendix III of these special provisions and details on Plans and as directed by the Engineer. Full compensation for complying with the above requirements shall be included in the unit price bid amount for the various items of work involved, and no further compensation shall be made therefore.

Bedding: Pipe bedding shall conform to trench details shown on the plans, and shall comply with the requirements of Section 306.1.2.1 of the SSPWC. Pipe

bedding shall extend a minimum of 4" or 1/8th of the pipe diameter, below the pipe, and a minimum of 12" above the pipe. In lieu of the sand equivalency specified in the Standard Specifications, the sand equivalent of the bedding material shall be 30 or greater. The sand equivalent shall be certified by the Contractor. Cost for furnishing and placing bedding material shall be included in the unit price bid amount for the various items of work involved, and no further compensation shall be made therefore.

Temporary Paving: Immediately after backfilling is completed the trench shall be surfaced with a temporary asphalt mix to a minimum depth of four inches (4"). Temporary A.C. surfacing shall be placed smooth and shall be maintained smooth until final paving is placed.

Payment for furnishing, placing and maintaining temporary paving shall be included in the unit price bid amount various items of work involved, and no further compensation shall be made therefore.

PAYMENT

Payment for **BID ITEM NO. 46 – REMOVE AND REPLACE 8" VCP SEWER (PIPLINE POINT REPAIR)** shall be at the Contract LINEAL FOOT (LF) price bid, including removal and disposal of the existing sewer line, construction of the sewer line, trenching and backfilling, and sewer bypass (if necessary) as specified in these special provisions and as directed by the Engineer, and all labor, tools, equipment and materials required to complete the work per the details shown on the plans, complete in place and as accepted by the Engineer.

BID ITEM NO. 47 – METRO RIGHT OF ENTRY PERMIT AND INSPECTION ON ARROYO VERDE ROAD

GENERAL

This bid item shall include obtaining a temporary right of entry permit from Metro and adhere to Metro's requirement for work within the railroad right of way.

No equipment or personnel shall be within 10' of the railroad track panels. Barriers shall be placed to prevent vehicles and equipment from encroaching into the railway as described in Traffic Control. The placement of the barriers is included in the Traffic Control bid item.

Included are the costs for insurance, construction management fees, preparation and approval of a Construction Work Plan, Metro Rail Safety Training, Right of Entry Agreement, and preparation and submittal of Track Allocation forms every week, and Metro's EIC and inspection.

If not already certified, Metro will require the on-site foreman to attend free Metro Rail Safety Training and obtain certification. As long as no work is to be done within 10' of the track panels, no other employees will require Metro Rail Safety Training.

PAYMENT

Payment for **BID ITEM NO. 47 – METRO RIGHT OF ENTRY PERMIT AND INSPECTION ON ARROYO VERDE ROAD** shall be at the actual costs, including obtaining a Right of Entry Permit, fees, and inspection as specified in these special provisions and as directed by Metro and the Engineer.

BID ITEM NO. 48 – REMOVE EXISTING FIRE HYDRANT AND VALVE. ABANDON EXISTING FIRE SERVICE LATERAL. INSTALL 6" CLOW MEDALLION FIRE HYDRANT PER CITY FIRE HYDRANT ASSEMBLY DETAIL, W-8 INCLUDING TRENCHING PER LACWD STD. PLAN W-46;

BID ITEM NO. 49 – INSTALL 2" BLOW OFF, BURIED, PER LACDPW STD. PLAN W-4;

BID ITEM NOS. 50, 52, and 53 – CONSTRUCT NEW 1", 1.5" and 2" WATER SERVICE PER LACWD STD. PLAN W-5. REPLACE METER AND METER BOX. 1", 1.5", and 2";

BID ITEM NO. 51 – CONSTRUCT NEW 1" WATER SERVICE PER LACWD STD. PLAN W-5. REPLACE METER AND METER BOX. 3/4". INSTALL 1" TO 3/4" BUSHING;

BID ITEM NOS. 54, 55, 56, 57, and 58 – INSTALL 4", 6", 8", 10", and 12" CL. 52, D.I.P. WATER MAIN LINE, INCLUDING TRENCHING PER LACDW STD. PLAN W-46;

BID ITEM NOS. 59, 60, 61, 62, and 63 – INSTALL 4", 6", 8", 10" and 12" MUELLER RESILIENT WEDGE GATE VALVE WITH VALVE BOX AND COVER PER LACWD STD. PLAN W-15:

BID ITEM NOS. 64, 65, and 66 – INSTALL 8"x4", 8"x6", 12"x8" REDUCER;

BID ITEM NOS. 67, 68, 69, 70, 71, 73, and 74 – INSTALL 6"x4"x4", 6"x6"x6", 8"x4"x4", 8"x8"x6", 8"x8"x8", 10"x10"x8", 12"x10"x10" TEE WITH THRUST BLOCK PER LACWD STD. PLAN W-21;

BID ITEM NOS. 72, 75, and 102– INSTALL 8"x8"x8"x8", 12"x12"x12"x12", and 18"x8"x18"x8" CROSS WITH THRUST BLOCK PER LACWD STD. PLAN W-21;

BID ITEM NOS. 76 through 88 – INSTALL 4" MJxMJ 45° BEND, 4" MJxMJ 90° BEND, 4" MJxMJ CUSTOM ANGLE BEND, 6" MJxMJ 11.25° BEND, 6" MJxMJ 22.5° BEND, 6" MJxMJ 45° BEND, 8" MJxMJ 11.25° BEND, 8" MJxMJ 22.5° BEND, 8" MJxMJ 45° BEND, 10" MJxMJ 22.5° BEND, 12" MJxMJ 11.25° BEND, 12" MJxMJ 22.5° BEND, and 12" MJxMJ 45° BEND WITH THRUST BLOCK PER LACWD STD. PLAN W-21

BID ITEM NOS. 89 through 93 – INSTALL 4", 6", 8", 10" and 12" MJxMJ COUPLING;

BID ITEM NO. 94 – INSTALL 8" BLIND FLANGE WITH THRUST BLOCK PER LACWD STD. PLAN W-21;

BID ITEM NOS. 95, 96, 97, 98, 99, and 100 – INSTALL 4", 6", 8", 10", 12" and 18" LINE STOP;

BID ITEM NO. 105 – INSTALL 2" AIR-RELEASE AND VACUUM VALVE ASSEMBLY PER LACWD STD. PLAN W-16. REPLACE ENTIRE SIDEWALK PANEL IF DAMAGED;

BID ITEM NO. 107 – REMOVE EXISTING FIRE SERVICE METER AND VAULT. INSTALL AMES 1000DCV-CFM 6 CHECK VALVE AND TWO (2) 6" MUELLER RESILIENT WEDGE GATE VALVES (BID ITEM INCLUDES VALVES) IN AN ARMORCAST 48"x60"x36" RPM VAULT WITH TWO POLYMER CONCRETE COVER LIDS, WITH ONE 9"x14" DROP IN LID, BOLT DOWN, AND "WATER" LOGO;

GENERAL

This section designates the requirements for the manufacture and installation of ductile iron pipe (DIP), fittings and appurtenances, to be furnished and installed by the Contractor at the location and to the lines and grades shown on the Plans as herein specified. The Contractor shall be responsible for storage, handling, pick-up and transport to the project site and installation of all pipe and fittings for this project.

During the period of construction, the Contractor shall keep existing water services in operation at all times except during those periods when the services are being reconnected to the new mainline, or when unavoidable interferences occur during the installation of new facilities.

No existing services will be disconnected and/or out of operation for a period of time greater than four (4) hours. The Contractor shall give written notice at least 48 hours in advance to all businesses and residents prior to interruption of service.

Water services, meters and meter boxes shall be constructed in the locations

shown on the plans in accordance with LACWD Standard Plan W-5 as modified per Appendix III of these specifications, and as shown on the plans. Water service shall be constructed of copper tubing. All other materials required for the new service and meter installation, **including new water meters and meter boxes**, shall be furnished by the Contractor in conformance with LACWD Standard Plan W-5 as modified per Appendix III of these specifications.

Pressure testing and disinfection shall be from the corporation stop to the proposed or existing main, and shall conform to the requirements of these technical provisions.

Contractor shall install water meter furnished by the City, and shall furnish and install new service from the angle meter stop to the new or existing main, per LACWD Standard Plan W-5 as modified per Appendix III of these specifications.

Pipe trenching shall conform to LACWD Std. Plan No. W-46, as modified per plan, including furnishing and placing 1-sack cement slurry backfill in lieu of native backfill within the trench, as shown on LACWD Std. Plan W-46. Bedding shall be sand in conformance with LACWD Std. Plan W-46.

All materials shall conform the City of South Pasadena Water Department's Material List (or approved equal), described as follows:

Pipe	Class 350 Ductile Iron (DI) pipe CL51 Tyton Joint (TJ) with gasket
Pipe Within 10' of Sewer	Class 350 Ductile Iron (DI) pipe CL51 Tyton Joint (TJ) with Tyton Field LOK 350 gasket
Water Elbows, Bends	*Tyler/Union* mechanical joint C153 Ductile Iron compact fittings
Water main coupling	*Smith Blair, Romac* coupling or approved equal
MJ pipe Restraint	*EBAA Mega lug, Romac* or approved equal
Bell & Spigot restraint	*Romac 600 series* Pipe Restraining System, or approved equal
Gate Valve	*Mueller* A-2360 Resilient wedge gate valve, or approved equal
Insertion Valve	Insta-Valve 250 Patriot Series Valve Insertion System, or approved equal
Line Stop	Total Piping Solutions, Inc. Triple-Tap, or approved equal
Gate Valve Cap	Cast Iron 9-9/16" x 6-3/8" (with "SPWD" marked

	on top)
Gate Valve Can	8” SDR35 PVC Pipe
Valve Can extension	20 gauge galvanized steel 8” x 18”
Valve Box for concrete	*Eisel 4TT* valve box for valves in concrete sidewalk or driveway
Fire Hydrant	*Clow Medallion* dry barrel hydrant with plugged drain
Fire Hydrant tapping Sleeve	*Mueller* H-304SS or *Romac* Stainless steel tapping sleeve, or approved equal
Fire Service check valve	*Ames* 1000DCV-CFM check valve or approved equal
Fire Service vault	*Armorcast* 48”x60”x36” RPM vault with two polymer concrete cover lids, with one 9”x14” drop in lid, bolt down, and “water” logo or approved equal
Service Pipe	Type-K soft Copper pipe
Service tapping Saddle	*Mueller* BR2B *Series* Bronze Service saddle double strap with AWWA Iron Pipe (IP) thread for corporation ball valve connection.
Corporation valve	*Mueller* B-25028 300 Ball corporation valve IP x Compression
Copper pipe coupling	*Mueller* H-15403 Compression connection, or approved equal
Meter	*Zenner PNM* water meter, cubic foot register units
	¾” Short PMN03
	1” PMN07
	1 ½” Flanged PMN09
	2” Flanged PMN12
Meter Angle Valve	1” *Mueller* B-24258 300 Ball angle meter valve
	1½” or 2” Mueller B-24276 300 Ball angle meter valve

Meter Box	*Armorcast* complete polymer meter box, or approved equal
Meter Coupling	*Mueller or Ford* meter coupling, or approved equal
Meter Bolts	Stainless Steel 304, or approved equal
Flange Nuts & Bolts	Stainless Steel 304, or approved equal
Air Vacuum/Release	*Val-Matic* 300psi rating, or approved equal
Air Vac Enclosure	Polymer AIR-VAC enclosure with hinged door

Pipe: Ductile iron pipe and fittings shall be manufactured in accordance with ANSI 21.50, AWWA C150 and ANSI 21.51, AWWA C151, and shall be of the sizes shown on the Plans. Unless otherwise specified, the minimum wall thickness shall be as specified in AWWA C150 for Pressure Class 350.

Lining and Coatings: All ductile iron pipes shall be cement-mortar lined in accordance with AWWA C104. Lining shall be "single thickness" as defined in AWWA C104. Lining materials shall conform to ASTM C150 Type II. Lining shall be applied at the factory by the pipe manufacturer.

Coat the exterior surfaces of pipe with an asphaltic material in conformance with ANSI A21.10 (AWWA C110) and ANSI A21.51 (AWWA C151). The coating shall be free from blisters and holes; shall adhere to the metal surface at ambient temperatures encountered in the field, shall be smooth, not brittle when cold, and shall not become sticky when exposed to the sun. The coating shall be checked by the manufacturer with a suitable electrical holiday detector.

Inspection and Certification: The Engineer reserves the right to inspect materials, production, and test pipes, fittings, and special pieces at the manufacturer's plant.

Polyethylene Encasement for External Corrosion Protection: All pipe and pipeline fittings shall be wrapped with Polyethylene in accordance with ANSI/AWWA C105. Polywrap material shall be clear 8 Mil Polyethylene flat tubing with dimensions appropriate for the size of pipe installed.

Installation of plastic film shall conform to the following procedure, and wrapping shall be applied to the pipe in the field in the following manner:

1. Placement of Polyethylene Encasement: Using a sling, the pipe shall be picked up with a crane at the side of the trench and raised about 3 feet off the ground. The polyethylene tube, cut approximately 2 feet longer than the length of pipe, shall be slipped over the spigot end of the pipe and bunched up, accordion fashion, between end of the pipe and the sling.

2. Placement of Pipe into Trench: The pipe shall be lowered into the trench. The spigot shall be sealed into the bell of the adjacent installed pipe, and the pipe

lowered into the trench bottom. A shallow bell hole shall be provided in the trench bottom to facilitate the wrapping of the joint.

3. Joint Assembly: The pipe joint shall then be made up as described herein.

4. Adjustment of Polyethylene Encasement: The sling shall be removed from the center of the pipe and hooked into the bell cavity. The bell shall be raised proximately 12 inches and the tube of polyethylene file slipped along the full length of the pipe barrel. Enough of the film shall be left bunched up, accordion fashion, at each end of the pipe to overlap the adjoining pipe about 1 foot. Care shall be taken to ensure that soil that adheres to the pipe is removed as the polyethylene film is placed around the pipe.

5. Overlapped Joints: To make the overlapped joint wrap, the file shall be pulled over the bell of the pipe, folded around the adjacent spigot, and wrapped with about three circumferential turns of the plastic adhesive tape in order to seal the tube of film to the pipe. The tube on the adjacent pipe shall be then pulled over the first wrap on the pipe bell and sealed in place behind the bell, using about three circumferential turns of the polyethylene adhesive tape.

6. Attachment of Encasement: The resulting loose wrap on the barrel of the pipe shall be pulled snugly around the barrel of the pipe, the excess material folded over the top and the fold held in place by means of short strips of adhesive tape at intervals 3 feet apart along the pipe barrel.

Joints and Accessories: Unless otherwise shown on the Plans, all pipe joints shall be the push-on type single gasket joint. Joints and accessories shall conform to the requirements and dimensions specified in ANSI A21.11, AWWA C111. Mechanical joints shall be used for all pipe fittings unless otherwise specified on the plans.

Shop Drawings: Shop drawings for ductile iron pipe and fittings shall be submitted and approved prior to ordering of pipe.

Concrete Thrust Blocks: Concrete thrust blocks shall be placed as shown on the Plans in conformance with LACWD Standard Plan W-21, and shall be Class 565-E-2000P per Section 201-1 of the Standard Specifications. Concrete blocks shall be placed between the undisturbed ground and the fittings to be anchored. Quantity of concrete and the bearing area of the pipe and undisturbed soil shall be as shown on the Plans, unless otherwise determined by the Engineer. The concrete shall be placed, unless specifically shown otherwise on the Plans, so that the pipe joints and fittings will be accessible to repairs. All concrete shall be kept behind the bells of the fitting and valves.

Fittings: Fittings for ductile iron pipe shall be manufactured in accordance with ANSI A21.10, AWWA C110 or C153. They shall be made of ductile iron and the letters “DI” or “DUCTILE” shall be cast on them, unless otherwise specified. All fittings shall be cement lined. T-head bolts are to be Corten steel. Fitting joints

shall be in accordance with ANSI A21.11, AWWA C111, and shall be push-on type joints, mechanical joints, flanged and connections, or ring tight, as indicated on the Plans.

Hydrostatic Pressure Test: Each fitting shall be tested before lining to one and one-half times the operating pressure for a duration of 2 hours. Suitable controls and recording devices shall be provided so that the test pressure shall be rejected. The Contractor is required to notify the Engineer in advance of the date, time, and place of inspection and testing of the fittings in order that the City may be represented at the tests. When specified in the special provisions, in some cases, the City may require a certification of compliance to these specifications. Contractor shall ensure that all such hydrostatic testing takes place in compliance with all requirements of the Los Angeles Regional Water Quality Control Board.

Bell Ends: Bell ends shall be compatible with the pipe ends so as to provide confinement of the rubber rings and prevent damage to the ends of the pipe. Ring grooves and interior surfaces of the bell shall be smooth and free from ridges, notches, or uneven surfaces.

Flanged Fittings: Unless otherwise indicated on the drawings, all fittings with flanged ends shall comply with ANSI/AWWA C110/A21.10, with a pressure rating of 150 psi. The gasket surface shall have a serrated finish of approximately 16 serrations per inch, approximately 1/32-inch deep, with serrations in either a concentric or spiral pattern. In addition, all flanges shall meet the following tolerances:

Bolt circle drilling	±1/16 inch
Bolthole spacing	±1/32 inch
Eccentricity of both circle & facing with respect to bore	1/32 inch max.

Fittings Manufacturers: Fittings shall be manufactured by American Pipe, Pacific States, U.S. Pipe, Tyler, or approved equal.

Gaskets for Flanged Joints: Gaskets for flanged joints shall be 1/8- inch thick, synthetic rubber. Gaskets shall be suitable for a water pressure of 350 psi at a temperature of 180 F.

Full Face Type Gaskets for Flanged Joints: Full face type gaskets with pre-punched holes shall be used where both flanges are flat face. Ring gaskets extending to the inner edge of the bolts may be used where a raised face flange is present.

Gaskets for Push-On, Mechanical, and Restrained Joints: Restraining glands shall be EBBA Iron MEGA-LUG Restraining glands or approved equal.

Gasket Manufacturers: Gasket shall be supplied by American Pipe, Pacific States, U.S. Pipe, Tyler, or approved equal.

Pipe Lengths: Pipe lengths shall be as specified in ANSI A21.51, AWWA C151, except where shorter lengths are required to fit horizontal and vertical alignment. Combined horizontal and vertical deflections at any rubber gasket of flexible coupling joints shall not exceed eighty percent (80%) of the maximum deflection recommended by the manufacturer.

Bolts and Nuts: Bolts and nuts for above-ground installations shall be cadmium plated and shall conform to ASTM A307, Grade B. Bolts for underground installations shall be Type 316 stainless steel. Washers shall be provided for each nut and shall be the same material as each nut. All buried bolts shall be completely coated with Bitumastic No. 50, as manufactured by KOP-COAT, Inc., or approved equal, which must be applied in two coats in a minimum thickness of 16-mils per coat.

Transportation: Transportation shall be by competent haulers and accomplished in a manner that will avoid damage to the pipe, its lining, or coating. The Contractor shall unload by mechanical means, such as a crane or backhoe, or by rope and skids, as recommended by the manufacturer. In using skids, pipes must be prevented from striking other pipe. No dropping of pipe from trucks will be allowed.

General Installation Procedures and Workmanship: Ductile iron pipe and fittings shall be assembled in accordance with the applicable sections of AWWA C600, "Installation of Gray and Ductile Iron Water Mains and Appurtenances" and as specified herein. Prior to laying the pipe, the bottom of the trench shall be graded and prepared to provide uniform bearing throughout the entire length of each joint of pipe. Bell holes of ample dimension shall be dug in the bottom of the trench at the location of each joint to facilitate the joining. The trench shall have a flat or semi-circular bottom conforming to the grade to which the pipe is to be laid. The pipe shall be supported independently of the pipe.

Cutting and machining of the pipe shall be accomplished in accordance with the pipe manufacturer's standard procedures for this operation and in accordance with AWWA C600. Pipe shall not be cut with a cold chisel, standard iron pipe cutter, or any other method that may fracture the pipe or will produce ragged, uneven edges.

Pipe shall be carefully handled to prevent damage to the lining and coating. Cable, rope, or other devices used for lowering fittings into the trench shall be attached around the exterior of the fitting for handling. Under no circumstances shall the cable, rope, or other device be attached through the fitting's interior for handling.

No joint shall be backfilled until it has been observed by the Engineer. Sufficient trench space shall be left open in the vicinity of each joint to permit visual observation around the entire periphery of the joint.

Preventing Foreign Matter from Entering the Pipe: At all times when pipe laying

is not in progress, the open end of the pipe shall be closed with a tight-fitting cap or plug to prevent the entrance of foreign matter into the pipe. These provisions shall apply during the noon hour as well as overnight. In no event shall the pipeline be used as a drain for removing water which has infiltrated into the trench. The Contractor shall maintain the inside of the pipe free from foreign materials and in a clean and sanitary condition until its acceptance by the Engineer.

Damaged Pipe or Fittings: Damaged pipe or fittings shall be removed upon discovery and without delay from the Project Site.

Trenching for Water Lines and Appurtenances: Trenching and excavation shall include, without classifications, the sawcut, removal and disposal of all materials of whatever nature encountered, including all asphalt, macadam, P.C.C., petromat/pavement reinforcing fabric, or other obstructions of every nature that would interfere with the proper execution and completion of the work. The Contractor shall furnish, place and maintain all supports, sheeting and shoring as set forth in the rules, orders and regulations of the Division of Industrial Safety of the State of California. The Contractor shall supply all pumping, ditching or other approved measure to affect the removal or exclusion of water, storm water and/or waste water reaching the site of the work from any source so as to prevent damage to the work. All such removal of water shall be conducted in accordance and compliance with the requirements of the Los Angeles Regional Water Quality Control Board. The costs for all trenching, sheeting, shoring, excavation, dewatering, sawcut, disposal, trench resurfacing, and related items shall be included in the unit price bid amount for the ductile iron pipe and appurtenances.

Trench Width: Unless otherwise shown, all trenches shall have vertical sides and shall have a minimum width equal to the outside diameter of the pipe plus 12" and a maximum width equal to the outside of the pipe plus 24". Pavement replacements shall be as per trench details as shown on plans.

Water Pollution and Drainage Control: The Contractor shall comply with subsections 7-8.6 and 7-8.7 of the Standard Specifications. The Contractor shall not permit muddy or polluted water to enter a catch basin or drainage channel.

Pumping: All excavations shall be kept free of water while concrete or pipe is being placed and until concrete has attained its initial set to eliminate any possible damage from such water. Any water accumulations in excavations from any source whatsoever shall be removed by the Contractor at his own expense. Waste water shall be disposed of in compliance with all Los Angeles Regional Water Quality Control Board requirements and in such a manner that it will not cause any damage to public or private property or will not be a menace or inconvenience to the public. This article does not construe that ground water is present. Field investigations have not been made to obtain water table depth.

Excess Excavated Material: Excess excavated material shall be removed from the site and disposed of by the Contractor at a legal dump site, at his own expense.

Excavated material shall be removed from the job site at the end of the work week. Failure to do so will result in the City removing material at the Contractor's expense. Cost shall be calculated at actual cost for labor and equipment plus overhead and benefits plus 125 percent administrative charges.

Preparation of Pipe and Structure Foundations: Bedding shall be placed as specified per details on the plans, and in conformance with City Standards and Specifications. The pipe shall be supported uniformly throughout its length. Bridging or mounding shall not be permitted.

Backfilling and Compacting: All excavations shall be backfilled to the level of the original ground or roadway surface unless otherwise shown on the plans or ordered by the Engineer.

Backfill around valve and valve box clusters shall be accomplished with sand (SE 30 or greater). The sand backfill shall be compacted by jetting. The trench, for a distance of five (5) feet each side of the valve box shall be filled with sand and compacted.

Trench backfill, including the area from 12" above the top of pipe to the bottom of the roadway structural section, shall be backfilled with suitable native materials or crushed aggregate base materials, compacted to 90% of maximum density, in conformance with LACWD Standard Plan W-46 as modified per Appendix III of these special provisions and details on Plans and as directed by the Engineer. Full compensation for complying with the above requirements shall be included in the unit price bid amount for the various items of work involved, and no further compensation shall be made therefore.

Bedding: Pipe bedding shall conform to trench details shown on the plans, and shall comply with the requirements of Section 306.1.2.1 of the SSPWC. Pipe bedding shall extend a minimum of 4" or $1/8^{th}$ of the pipe diameter, below the pipe, and a minimum of 12" above the pipe. In lieu of the sand equivalency specified in the Standard Specifications, the sand equivalent of the bedding material shall be 30 or greater. The sand equivalent shall be certified by the Contractor. Cost for furnishing and placing bedding material shall be included in the unit price bid amount for the various items of work involved, and no further compensation shall be made therefore.

Temporary Paving: Immediately after backfilling is completed the trench shall be surfaced with a temporary asphalt mix to a minimum depth of four inches (4"). Temporary A.C. surfacing shall be placed smooth and shall be maintained smooth until final paving is placed.

Payment for furnishing, placing and maintaining temporary paving shall be included in the unit price bid amount various items of work involved, and no further compensation shall be made therefore.

Tunnels: All curbs, gutters and cross gutters shall be tunneled. Tunnels shall be

backfilled with one and one half (1½) sack sand-cement slurry mix. Payment for furnishing and placing slurry backfill shall be included as part of the unit price bid amount for which such work is appurtenant thereto.

Remove Valves and Fittings: The Contractor shall remove valves, tees, crosses, and pipe as shown on the plans and as necessary to perform construction. All fittings, pipe and valves shall be removed and disposed of by the Contractor. Isolated excavations for removals shall be backfilled with slurry.

Pressure Testing and Disinfection: The Contractor shall furnish all labor, materials (including water), tools, and equipment necessary to provide and complete field testing, pressure testing, flushing and disinfection as specified. Contractor shall ensure all such flushing complies with all applicable laws and regulations, including all Los Angeles Regional Water Quality Control Board requirements. All pipelines shall be tested for water-tightness by subjecting each section to Hydrostatic Pressure and Leakage Tests in accordance with the applicable requirements of AWWA C600, except as modified herein.

It shall be the Contractor's sole responsibility to plan his construction activities to allow and facilitate testing, flushing and disinfection of all sections of potable water lines. It shall be the Contractor's sole responsibility to obtain any and all permits required to carry out the Work specified herein.

The Contractor shall furnish all labor, water, chemicals, and equipment necessary for completing the disinfection process and for obtaining, transporting and testing samples as specified herein. The use of chlorine solutions is anticipated as the active disinfecting agent. The Contractor shall be solely responsible for the safe and proper handling of the chlorine compounds or other hazardous chemicals utilized. Only chlorine from a hypochlorite solution or a gas-to-solution injector will be allowed. Direct injection of chlorine gas is prohibited. Hypochlorite solutions must be pre-mixed and fed to tanks or piping and not placed dry. Containers and equipment used in sampling must be clean and free of contamination. Sampling bottles shall be obtained from the testing lab along with instructions for handling.

Hydrostatic Testing: Hydrostatic testing shall be successfully completed before any new pipelines, potable or recycled, are connected to any existing City facilities, unless otherwise approved by the Engineer.

A. Prior to applying the specified test pressure, care shall be taken to ensure the expulsion through hydrants, air and vacuum valve assemblies, and services or by other suitable means, of all air within the pipe and appurtenances to be tested. If there are no air release valves, hydrants or other outlets available at the downstream end of the pipeline and at high points, taps shall be installed to expel the air. These taps shall be capped, and after testing is completed, plugged.

B. Prior to testing, isolation between existing pipelines or mains must be insured. Pressure tests shall be conducted between valves or against temporary

bulkheads in the pipe. During the test, no temporary blocking will be permitted. All valves, fire hydrants, service connections, fittings, collars, joints and other appurtenances shall be exposed until after successful completion of the test, unless otherwise directed by the Engineer.

C. A test pressure based upon the elevation of the highest point in the line or section under test and corrected to the elevation of the test gage shall be applied by means of an approved pump and gallon water meter connected to the pipe in the manner satisfactory to the Engineer. The test shall be made on all sections of the pipeline in such a manner that all valves, fire hydrants, service connections, fittings, collars or joints, and other appurtenances shall have successfully withstood, for a period of 2 hours a pressure of 150 psi.

All defective joints, cracked or defective pipe, fittings, valves, fire hydrants, or service connections shall be removed and replaced by the Contractor. The test shall be repeated until results satisfactory to the Engineer are obtained.

Removal and replacement of defective joints, cracked or defective pipe, fittings, valves, fire hydrants, or service connections shall not take place prior to notification or without approval of the Engineer. The aforementioned test shall be performed by the Contractor, including all work of tapping and connecting. The Contractor shall repeat the test until results satisfactory to the Engineer are obtained.

All tests shall be performed by the Contractor at Contractor's sole expense. The Contractor shall provide all tools, fittings, and equipment necessary to accomplish said work. The test shall be performed only in the presence of the Engineer. During the period of testing, the joints and taps shall be exposed and any material sweating or showing dampness will not be accepted unless otherwise approved by the Engineer.

When it is necessary to cover the ditch as soon as the water main is laid, the Engineer may permit the backfilling to be completed prior to testing and disinfecting. If the pipe then tested exceeds the allowable leakage, the pipe must be uncovered, repaired and tested until it meets the allowable leakage.

Maximum Length of Pipe: Maximum length of pipe to be included in any one test shall be no more than 2,500-feet or the distance between valves, whichever is greater. The Contractor shall provide suitable test bulkheads, blocking, and fittings to permit such sectionalizing.

Preparation: The test shall be applied at an approved outlet or fitting located within an elevation of 5-feet of the lowest point of the pipe section to be tested. The Contractor shall provide and later securely plug such fittings. The line shall be filled slowly and maintained at operating pressure for a period of at least 24 hours prior to testing to satisfy any system water absorption. While filling and immediately prior to testing, all air shall be expelled from the pipeline. Where air valves or other suitable outlets are not available, approved taps and fittings shall

be provided at all high points and later securely plugged.

Pressure Testing: After the 24-hour soak period, the pressure in the pipeline shall be pumped up to the specified test pressure. When the test pressure has been reached, the pumping shall be discontinued until the pressure in the line has dropped 10-psi, at which time the pressure in the pipeline shall again be pumped up to the specified test pressure. This procedure shall be repeated until four hours have elapsed from the time the specified test pressure was first applied. At the end of this period, the pressure shall be pumped up to the specified test pressure for the last time.

Leakage: Leakage shall be considered as the total quantity of water pumped into the pipeline during the four hour period, including the amount required in reaching the specified test pressure for the final time. Leakage shall not exceed the rate as specified under for the type of pipe material being tested. If the leakage exceeds the rate, as specified elsewhere, the Contractor shall, at his own expense, locate and make all repairs as necessary until the leakage is within the specified allowance.

The test shall be repeated until the leakage does not exceed the specified leakage rate. All visible leaks shall be repaired regardless of the amount of leakage.

Flushing: All potable water mains and services shall be flushed with potable water after completion of construction and prior to disinfection in compliance with all applicable laws and regulations, including all Los Angeles Regional Water Quality Control Board requirements. The Contractor shall provide a sufficient number of suitable outlets at the end(s) of the line(s) being flushed in addition to those required by the Plans to permit the main to be flushed with water at a velocity of at least 2.5-feet per second over its entire length. The outlets provided shall meet the requirements for fittings as specified for the type of main constructed. The velocity through outlets and fittings shall not exceed 25 fps during the flushing operation. Drainage facilities shall be constructed such that the water lines cannot be contaminated through the flushing outlet.

The Contractor shall be solely responsible for providing a source of water for flushing and the methods for discharge of the water, including all associated costs and permits.

Disinfection Procedure: After pressure testing and prior to acceptance of the Work, the entire pipeline, including all valves, fittings, hydrants, service laterals, and other accessories, shall be disinfected in accordance with AWWA C651, except as modified herein.

Disinfection - Potable Water Mains: After flushing, all mains and services shall be disinfected with chlorine gas or chlorine compound solution made with liquid chlorine, calcium hypochlorite in solution, or sodium hypochlorite solution, which shall be water mixed and introduced into the mains to produce a dosage of not less than 50 mg/ml nor more than 100 mg/ml in all sections of the pipeline and

appurtenances. Treated water shall be retained within the system for a minimum period of 24-hours and shall produce at the end of the retention period a chlorine residual of not less than 25 mg/ml in all sections being disinfected. If the tests are not satisfactory, the Contractor shall provide additional disinfection at his expense as required until all tests are to the satisfaction of the Owner. During the disinfection process, all valves, hydrants, and other accessories shall be operated. After chlorination, the water shall be flushed from the line at its extremities until the replacement water tests are equal chemically and bacteriologically to those of the permanent source of supply. The placing of HTH capsules or powder in pipe sections during the laying process WILL NOT be considered adequate disinfection. The Contractor shall keep adequate chlorine residual testing and indicating apparatus available on the site during the entire disinfection period. After final flushing, the flushing fittings shall be plugged with devices intended for this purpose at the pressure class of the pipe. Where water main is coated, plugs and outlets shall be similarly coated.

Bacteriologic Samples: One sample of water for the specified bacteriologic test shall be taken from each end of the disinfected main (located downstream of the point of introduction of chlorine disinfectant). For mains over 2,500-feet in length, additional samples shall be taken at intermediate points in such a manner that at least one sample is taken for each 2,500-feet of main. The Contractor, at his sole expense, shall perform all bacteriologic sampling and testing for the project, by a laboratory approved by the City of South Pasadena. Any subsequent additional sampling and testing required due to failure of the initial samples to conform to the Standard Specifications, shall also be performed by the Contractor at his sole expense.

Potholing Existing Utilities: The Engineer has attempted to plot the location of utilities on the plans. It is the Contractor's responsibility to notify Underground Service Alert (USA) to locate facilities prior to beginning the work. In addition, the Contractor shall locate service laterals that may be affected by the work and take measures to protect all utilities and service laterals in the streets and parkways.

The Contractor shall determine for himself the exact location of all public and private utilities which may, or may not, be shown on the plans. In the event any utility is disturbed or damaged, the Contractor shall immediately cause repairs to be made to the satisfaction of the Engineer at no cost to the City.

A minimum of 48 hours prior to start of work, the Contractor shall pothole and verify the depth of the existing gas, storm drain and other interfering utilities, to ensure and verify that the new water service connection can be constructed per LACWD Standard Plan W-5 as shown on the plans and as modified per Appendix III of these specifications. Any proposed modification of the Standard water service connection shall be submitted to the Engineer in writing a minimum of 48 hours prior the start of the work.

Payment for the requirements of Potholing existing utilities shall be included in

the contract unit prices bid for the various items of work involved, and shall include all labor, materials, tools, equipment, and incidentals necessary to do all the work involved thereof. No additional compensation will be allowed therefore.

PAYMENT

Payment for **BID ITEM NO. 48 – REMOVE EXISTING FIRE HYDRANT AND VALVE. ABANDON EXISTING FIRE SERVICE LATERAL. INSTALL 6" CLOW MEDALLION FIRE HYDRANT PER CITY FIRE HYDRANT ASSEMBLY DETAIL, W-8 INCLUDING TRENCHING PER LACWD STD. PLAN W-46** shall be at the contract unit price bid per each (EA) and shall include full compensation for all labor, materials, tools, equipment, and incidentals necessary to do all the work involved thereof, complete, in place, and accepted. The cost for furnishing and installing water lateral, trenching, fittings, pressure testing and disinfection, potholing, excavation, sand bedding, 1-sack cement slurry backfill, compaction and trench backfill, removal of the existing hydrant and abandonment of the existing hydrant lateral, and restoration shall be per the contract unit price bid per EACH (EA) for each fire hydrant assembly shown on the plans. No additional compensation will be allowed.

Payment for **BID ITEM NO. 49 – INSTALL 2" BLOW OFF, BURIED, PER LACDPW STD. PLAN W-4**, shall be at the contract unit price bid per each (EA) and shall include full compensation for all labor, materials, tools, equipment, and incidentals necessary to do all the work involved thereof, complete, in place, and accepted. The cost for furnishing and installing water main, trenching, fittings, pressure testing and disinfection, potholing, excavation, sand bedding, 1-sack cement slurry backfill, compaction and trench backfill shall be per the contract unit price bid per EACH (EA) for each described combination of fittings and connections shown on the plans. No additional compensation will be allowed.

Payment for **BID ITEM NOS. 50, 52, and 53 – CONSTRUCT NEW 1", 1.5" and 2" WATER SERVICE PER LACWD STD. PLAN W-5. REPLACE METER AND METER BOX,** shall be at the contract unit price bid per EACH (EA) and shall include full compensation for all labor, materials, tools, equipment, and incidentals necessary to do all the work involved thereof, complete, in place, and accepted. The cost for furnishing and installing new meters, new meter boxes, water services and connections, furnishing and placing clamps, fittings, corporation stop and angle meter stop, tapping and making connection to the new or existing main line, new meter and existing service, pressure testing and disinfection, potholing, excavation, sand bedding, 1-sack cement slurry backfill, compaction and trench backfill shall be per the contract unit price bid per EACH (EA) for each copper water service, including meter and connections shown on the plans. No additional compensation will be allowed.

Payment for **BID ITEM NO. 51 – CONSTRUCT NEW 1" WATER SERVICE PER LACWD STD. PLAN W-5. REPLACE METER AND METER BOX. 3/4" WATER. INSTALL 1" TO 3/4" BUSHING**, shall be at

the contract unit price bid per EACH (EA) and shall include full compensation for all labor, materials, tools, equipment, and incidentals necessary to do all the work involved thereof, complete, in place, and accepted. The cost for furnishing and installing new meters, new meter boxes, water services and connections, furnishing and placing clamps, fittings, corporation stop and angle meter stop, tapping and making connection to the new or existing main line, new meter and existing service, pressure testing and disinfection, potholing, excavation, sand bedding, 1-sack cement slurry backfill, compaction and trench backfill shall be per the contract unit price bid per EACH (EA) for each copper water service, including meter and connections shown on the plans. No additional compensation will be allowed.

Payment for **BID ITEM NOS. 54, 55, 56, 57, and 58 – INSTALL 4", 6", 8", 10", and 12" CL. 52, D.I.P. WATER MAIN LINE, INCLUDING TRENCHING PER LACDW STD. PLAN W-46**, shall be at the contract unit price bid per linear foot (LF) and shall include full compensation for all labor, materials, tools, equipment, and incidentals necessary to do all the work involved thereof, complete, in place, and accepted. The cost for furnishing and installing water main, trenching, fittings, pressure testing and disinfection, potholing, excavation, sand bedding, 1-sack cement slurry backfill, compaction and trench backfill shall be per the contract unit price bid per EACH (EA) for each tee and connections shown on the plans. No additional compensation will be allowed.

Payment for **BID ITEM NOS. 64, 65, and 66 – INSTALL 8"x4", 8"x6", 12"x8" REDUCER**, shall be at the contract unit price bid per each (EA) and shall include full compensation for all labor, materials, tools, equipment, and incidentals necessary to do all the work involved thereof, complete, in place, and accepted. The cost for furnishing and installing water main, trenching, fittings, pressure testing and disinfection, potholing, excavation, sand bedding, 1-sack cement slurry backfill, compaction and trench backfill shall be per the contract unit price bid per EACH (EA) for each described combination of fittings and connections shown on the plans. No additional compensation will be allowed.

Payment for **BID ITEM NOS. 67, 68, 69, 70, 71, 73, and 74 – INSTALL 6"x4"x4", 6"x6"x6", 8"x4"x4", 8"x8"x6", 8"x8"x8", 10"x10"x8", 12"x10"x10" TEE WITH THRUST BLOCK PER LACWD STD. PLAN W-21**, shall be at the contract unit price bid per each (EA) and shall include full compensation for all labor, materials, tools, equipment, and incidentals necessary to do all the work involved thereof, complete, in place, and accepted. The cost for furnishing and installing water main, trenching, fittings, pressure testing and disinfection, potholing, excavation, sand bedding, 1-sack cement slurry backfill, compaction and trench backfill shall be per the contract unit price bid per EACH (EA) for each tee and connections shown on the plans. No additional compensation will be allowed.

Payment for **BID ITEM NOS. 72, 75, and 102– INSTALL 8"x8"x8"x8", 12"x12"x12"x12", and 18"x8"x18"x8" CROSS WITH THRUST BLOCK**

PER LACWD STD. PLAN W-21, shall be at the contract unit price bid per each (EA) and shall include full compensation for all labor, materials, tools, equipment, and incidentals necessary to do all the work involved thereof, complete, in place, and accepted. The cost for furnishing and installing water main, trenching, fittings, pressure testing and disinfection, potholing, excavation, sand bedding, 1-sack cement slurry backfill, compaction and trench backfill shall be per the contract unit price bid per EACH (EA) for each tee and connections shown on the plans. No additional compensation will be allowed.

Payment for **BID ITEM NOS. 76 through 88 – INSTALL 4" MJxMJ 45° BEND, 4" MJxMJ 90° BEND, 4" MJxMJ CUSTOM ANGLE BEND, 6" MJxMJ 11.25° BEND, 6" MJxMJ 22.5° BEND, 6" MJxMJ 45° BEND, 8" MJxMJ 11.25° BEND, 8" MJxMJ 22.5° BEND, 8" MJxMJ 45° BEND, 10" MJxMJ 22.5° BEND, 12" MJxMJ 11.25° BEND, 12" MJxMJ 22.5° BEND, and 12" MJxMJ 45° BEND WITH THRUST BLOCK PER LACWD STD. PLAN W-21**, shall be at the contract unit price bid per each (EA) and shall include full compensation for all labor, materials, tools, equipment, and incidentals necessary to do all the work involved thereof, complete, in place, and accepted. The cost for furnishing and installing water main, trenching, fittings, pressure testing and disinfection, potholing, excavation, sand bedding, 1-sack cement slurry backfill, compaction and trench backfill shall be per the contract unit price bid per EACH (EA) for each tee and connections shown on the plans. No additional compensation will be allowed.

Payment for **BID ITEM NOS. 89 through 93 – INSTALL 4", 6", 8", 10" and 12" MJxMJ COUPLING**, shall be at the contract unit price bid per each (EA) and shall include full compensation for all labor, materials, tools, equipment, and incidentals necessary to do all the work involved thereof, complete, in place, and accepted. The cost for furnishing and installing water main, trenching, fittings, pressure testing and disinfection, potholing, excavation, sand bedding, 1-sack cement slurry backfill, compaction and trench backfill shall be per the contract unit price bid per EACH (EA) for each tee and connections shown on the plans. No additional compensation will be allowed.

Payment for **BID ITEM NO. 94 – INSTALL 8" BLIND FLANGE WITH THRUST BLOCK PER LACWD STD. PLAN W-21**, shall be at the contract unit price bid per each (EA) and shall include full compensation for all labor, materials, tools, equipment, and incidentals necessary to do all the work involved thereof, complete, in place, and accepted. The cost for furnishing and installing water main, trenching, fittings, pressure testing and disinfection, potholing, excavation, sand bedding, 1-sack cement slurry backfill, compaction and trench backfill shall be per the contract unit price bid per EACH (EA) for each tee and connections shown on the plans. No additional compensation will be allowed.

Payment for **BID ITEM NOS. 95, 96, 97, 98, 99, and 100 – INSTALL 4", 6", 8", 10", 12", and 18" LINE STOP**, shall be at the contract unit price bid per each (EA) and shall include full compensation for all labor, materials, tools,

equipment, and incidentals necessary to do all the work involved thereof, complete, in place, and accepted. The cost for furnishing and installing water main, trenching, fittings, pressure testing and disinfection, installation of blind flange, potholing, excavation, sand bedding, 1-sack cement slurry backfill, compaction and trench backfill shall be per the contract unit price bid per EACH (EA) for each tee and connections shown on the plans. No additional compensation will be allowed.

Payment for **BID ITEM NO. 105 – INSTALL 2" AIR-RELEASE AND VACUUM VALVE ASSEMBLY PER LACWD STD. PLAN W-16. REPLACE ENTIRE SIDEWALK PANEL IF DAMAGED**, shall be at the contract unit price bid per each (EA) and shall include full compensation for all labor, materials, tools, equipment, and incidentals necessary to do all the work involved thereof, complete, in place, and accepted. The cost for furnishing and installing the air vacuum/release, air vacuum enclosure, trenching, fittings, pressure testing and disinfection, potholing, excavation, sand bedding, 1-sack cement slurry backfill, compaction, trench backfill, and sidewalk repair shall be per the contract unit price bid per EACH (EA) for each described combination of fittings and connections shown on the plans. No additional compensation will be allowed.

Payment for **BID ITEM NO. 107 – REMOVE EXISTING FIRE SERVICE METER AND VAULT. INSTALL AMES 1000DCV-CFM 6 CHECK VALVE AND TWO (2) 6" MUELLER RESILIENT WEDGE GATE VALVES (BID ITEM INCLUDES VALVES) IN AN ARMORCAST 48"x60"x36" RPM VAULT WITH TWO POLYMER CONCRETE COVER LIDS, WITH ONE 9"x14" DROP IN LID, BOLT DOWN, AND "WATER" LOGO** shall be at the contract unit price bid per each (EA) and shall include full compensation for all labor, materials, tools, equipment, and incidentals necessary to do all the work involved thereof, complete, in place, and accepted. The cost for furnishing and installing fire service meter, two (2) 6” wedge gate valves, vault, trenching, fittings, pressure testing and disinfection, potholing, excavation, sand bedding, 1-sack cement slurry backfill, compaction and trench backfill, removal of the existing meter and vault, and abandonment of the existing lateral, and restoration shall be per the contract unit price bid per EACH (EA) for each fire meter assembly shown on the plans. No additional compensation will be allowed.

BID ITEM NOS. 59, 60, 61, ,62, and 63 – INSTALL 4", 6”, 8”, 10” and 12” MUELLER RESILIENT WEDGE GATE VALVE WITH VALVE BOX AND COVER PER LACWD STD. PLAN W-15

GENERAL

The Contractor shall furnish and install all valves in locations and sizes as shown on the plans in conformance with City Water Department Specifications and Los Angeles County Waterworks Districts (LACWD) Std. W-15 as modified per

Appendix III of these specifications, and provide all appurtenances necessary for the correct and complete installation, including but not limited to all labor, material, tools, equipment, and incidentals. All valves are to be installed plumb. The components to be supplied are gate valves; installation shall conform to the manufacturer's recommendations.

No valve or other control on the existing utilities shall be operated for any purpose by the Contractor.

The Contractor shall remove valves, tees, crosses, and pipe as shown on the plans and as necessary to perform construction. All fittings, pipe and valves shall be removed and disposed of by the Contractor. The cost to remove all fittings, pipe and valves shall be included in the unit price bid for the various items of work involved, and no additional compensation will be allowed therefore.

Care shall be taken to protect the exterior coating of fittings and valves. Damaged coatings shall be repaired as specified by the valve manufacturer. All backfill within 24 inches of a valve shall be clean washed sand.

a. Gate Valves

i. Gate valves shall be resilient-seat designed and manufactured in accordance with AWWA C509—latest, except as specified herein or as shown on the plans.

ii. Gate valves shall be capable of buried service, as shown on the plans. All buried gate valves shall have non-rising stems and a wedge nut; be equipped with a valve can and, if necessary, a valve stem extension, as shown on the Plans. Bodies of all gate valves shall be of gray iron or ductile iron and valve gate shall be of gray iron or ductile iron. Unless specified otherwise, gate valves shall be flanged and designed for a working pressure of 150-psi minimum.

iii. Gate valve body and bonnet shall be fusion-bonded epoxy coated (10 mils minimum) inside and outside in accordance with AWWA C550—latest. Completed coating shall be free from all defects and shall be impacted by use of low voltage holiday detectors and non-destructive thickness gages.

iv. Gate valves shall be tagged or labeled with the manufacturer's name, model number, cast year, size, and pressure rating. Contractor shall provide manufacturer's certification that all material used in valves produced under AWWA C500—latest.

v. Gate valves shall be type A-2360 Resilient Wedge gate valves, as manufactured by Mueller (or approved equal).

b. Valve Can

The valve cans shall conform to LACWD Standard Plan W-15 as modified per Appendix III of these specifications, for valves located within asphalt or dirt areas, as shown on the Plans. Valve cans located within concrete sidewalk or driveway areas, as shown on the plans, shall be Eisel 4TT valve box, or approved equal. Valve can extensions shall be 20 gauge galvanized steel 8" x 18". Valve caps shall be cast iron 9-9/16" x 6-3/8" with "SPWD" marked on top.

c. Submittals

The Contractor shall furnish detailed technical information as required by the Engineer for evaluating the quality of the valves and as required by the manufacture for proper valve installation. The technical information shall include complete dimensions, weights, and material lists.

d. Installation

All ductile iron or cast iron valves, piping or appurtenances shall be encased in polyethylene according to AWWA C105—99. Any cutting of asbestos cement piping shall be by the snap cut method to minimize air borne particles.

e. Pressure Testing and Disinfection

Pressure testing and disinfection of all valves and fittings shall conform to the requirements of Section 18.1 of these technical provisions.

PAYMENT

Payment for **BID ITEM NOS. 59, 60, 61, 62, and 63 – INSTALL 4", 6", 8", 10" and 12" MUELLER RESILIENT WEDGE GATE VALVE WITH VALVE BOX AND COVER PER LACWD STD. PLAN W-15** shall be included in the contract unit price bid per EACH (EA) 8" gate valve installed in place. Payment shall include the cost of potholing, sawcutting, trenching, sheeting, shoring, dewatering, excavation, removal, disposal, compaction, sand bedding, backfill, valve installation, pressure testing and disinfection, temporary and permanent trench resurfacing, all fittings not specifically included in separate bid items, adjusting the new valve can and cover to final grade upon completion of paving, and all appurtenances, labor, tools, equipment, materials and incidentals required to complete the work. No additional compensation will be allowed therefore.

BID ITEM NO. 101 – REMOVE EXISTING FLUSH TANK AND COVER. REPLACE ENTIRE SIDEWALK PANEL IF DAMAGED

GENERAL

Removal of existing flush tank shall conform to the provisions of Section 306-3.3, 303-5, and 400-1 of the Standard Specifications and shall be performed as

required per Typical Sections and details shown on the Plans, or as directed by the Engineer.

The flush tank shall be removed and the void shall be backfilled. The conduit leading to the sewer line shall be sealed. Damaged sidewalk shall be sawcut and removed to existing score lines and replaced.

PAYMENT

Payment for **BID ITEM NO. 101 – REMOVE EXISTING FLUSH TANK AND COVER. REPLACE ENTIRE SIDEWALK PANEL IF DAMAGED** shall be at the contract bid item price per each (EA), including removal and disposal of the flush tank and sidewalk, sealing the conduit, filling the void, and replacing the entire sidewalk panel as specified in these special provisions and as directed by the Engineer, and all labor, tools, equipment and materials required to complete the work per the details shown on the plans, complete in place and as accepted by the Engineer.

BID ITEM NO. 103 – ABANDON AND SEAL EXISTING WATER SYSTEM IN PLACE AND CUT, PLUG, AND CEMENT EXISTING PIPE END PER LACWD STD. PLAN W-22

GENERAL

Abandonment and sealing of the existing water system shall conform to the provisions of Section 306-3.3 of the Standard Specifications and shall be performed as required per Typical Sections and details shown on the Plans, or as directed by the Engineer.

PAYMENT

Payment for **BID ITEM NO. 103 – ABANDON AND SEAL EXISTING WATER SYSTEM IN PLACE AND CUT, PLUG, AND CEMENT EXISTING PIPE END PER LACWD STD. PLAN W-22** shall be at the Contract LUMP SUM (LS) price bid, including removal and disposal of interfering conduit and fittings, sealing the conduit, and filling the void as specified in these special provisions and as directed by the Engineer, and all labor, tools, equipment and materials required to complete the work per the details shown on the plans, complete in place and as accepted by the Engineer.

BID ITEM NO. 104 – REMOVE EXIST. VALVE CAN AND COVER. FILL WITH C.L.S.M. UP TO A.C.

GENERAL

Removal of existing valve can and cover shall conform to the provisions of Section 401 of the Standard Specifications and shall be performed as required per Typical Sections and details shown on the Plans, or as directed by the Engineer.

The valve can and cover shall be removed. The valve can be protected in place if not in conflict with proposed improvements. The void shall be backfilled with 1-sack slurry up to the bottom of the proposed A.C. pavement.

PAYMENT

Payment for **BID ITEM NO. 104 – REMOVE EXIST. VALVE CAN AND COVER. FILL WITH C.L.S.M. UP TO A.C.** shall be at the Contract LUMP SUM (LS) price bid, including removal and disposal of the valve can and cover and filling the void as specified in these special provisions and as directed by the Engineer, and all labor, tools, equipment and materials required to complete the work per the details shown on the plans, complete in place and as accepted by the Engineer.

BID ITEM NO. 106 – FILL ABANDONED WATER LINES UNDER TRACKS, EXTENDING 10' BEYOND RAILROAD GATES WITH CELLCRETE

GENERAL

The abandoned water lines underneath the Metro railroad tracks on Arroyo Verde Road shall be filled with Elastizell PS cellular concrete manufactured by Elasitzell Corporation of America or approved equal.

The contractor shall locate the abandoned water line, provide access point(s) to the water line as necessary to completely fill the abandoned water lines with cellular concrete as specified by the manufacturer, and backfill the trench(es) with 1-sack cement slurry backfill.

The contractor shall perform the work as to not impact Metro rail operations

PAYMENT

Payment for **BID ITEM NO. 106 – FILL ABANDONED WATER LINES UNDER TRACKS, EXTENDING 10' BEYOND RAILROAD GATES WITH CELLCRETE** shall be at the contract unit price bid per linear foot (LF), and shall include full compensation for all labor, materials, tools, equipment, and incidentals necessary to do all the work involved thereof, complete, in place, and accepted. The cost for potholing, excavation, cellular concrete, 1-sack cement slurry backfill, shall be per the contract unit price bid per linear foot (LF). No additional compensation will be allowed.

APPENDIX II

FY 19-20 STREET IMPROVEMENT PROJECT
PROJECT SPECIFICATION NO. 2020-01 (002001)
IN THE CITY OF SOUTH PASADENA, CALIFORNIA

Geotechnical Report

Approved for use on June 7, 2023
294856.v3

Converse Consultants
Geotechnical Engineering, Environmental & Groundwater Science, Inspection & Testing Services

November 5, 2020

Mr. Cody Howing, PE
Director of Engineering
RKA Consulting Group
398 South Lemon Creek Drive, Suite E
Walnut, California 91789

Subject: **PAVEMENT STUDY LETTER REPORT**
City of South Pasadena FY19-20 Street Improvement Project
Various Streets in South Pasadena, California
Converse Project No. 20-31-166-01

Dear Mr. Howing:

In accordance with your request and approval, Converse Consultants (Converse) has prepared this pavement study letter report for the subject project.

1.0 INTRODUCTION

The City of South Pasadena is proceeding with implementing Capital Improvement Projects (CIPs), as identified in the City's "Capital Improvement Program Fiscal Year 2019-2020". Converse understands that the City of South Pasadena would like to improve the pavement along the streets shown below:

Segment 01: Pine Street, Meridian Avenue to Huntington Drive
Segment 02: Maple Street, Fremont Avenue to Primrose Avenue
Segment 03: Maple Street, Meridian Avenue to Huntington Drive
Segment 04: Mill Road, Garfield Avenue to end of street
Segment 05: Oneonta Knoll Street, Freemont Avenue to Primrose Avenue
Segment 06: Milan Avenue, Edgewood Drive to Oak Street
Segment 07: Edgewood Drive, Milan Avenue to Wayne Avenue
Segment 08: Mission Street, Pasadena Avenue to Arroyo Drive
Additive Design Option--Mission Street and Arroyo Drive Intersection
Segment 09: Glendon Way, Monterey to Lyndon Street
Segment 10: Arroyo Verde Road, Monterey Road to Arroyo Verde Road (Marmion Way)

Project locations are shown in Drawing No. 1, *Site Location Map*, highlighted with blue lines.

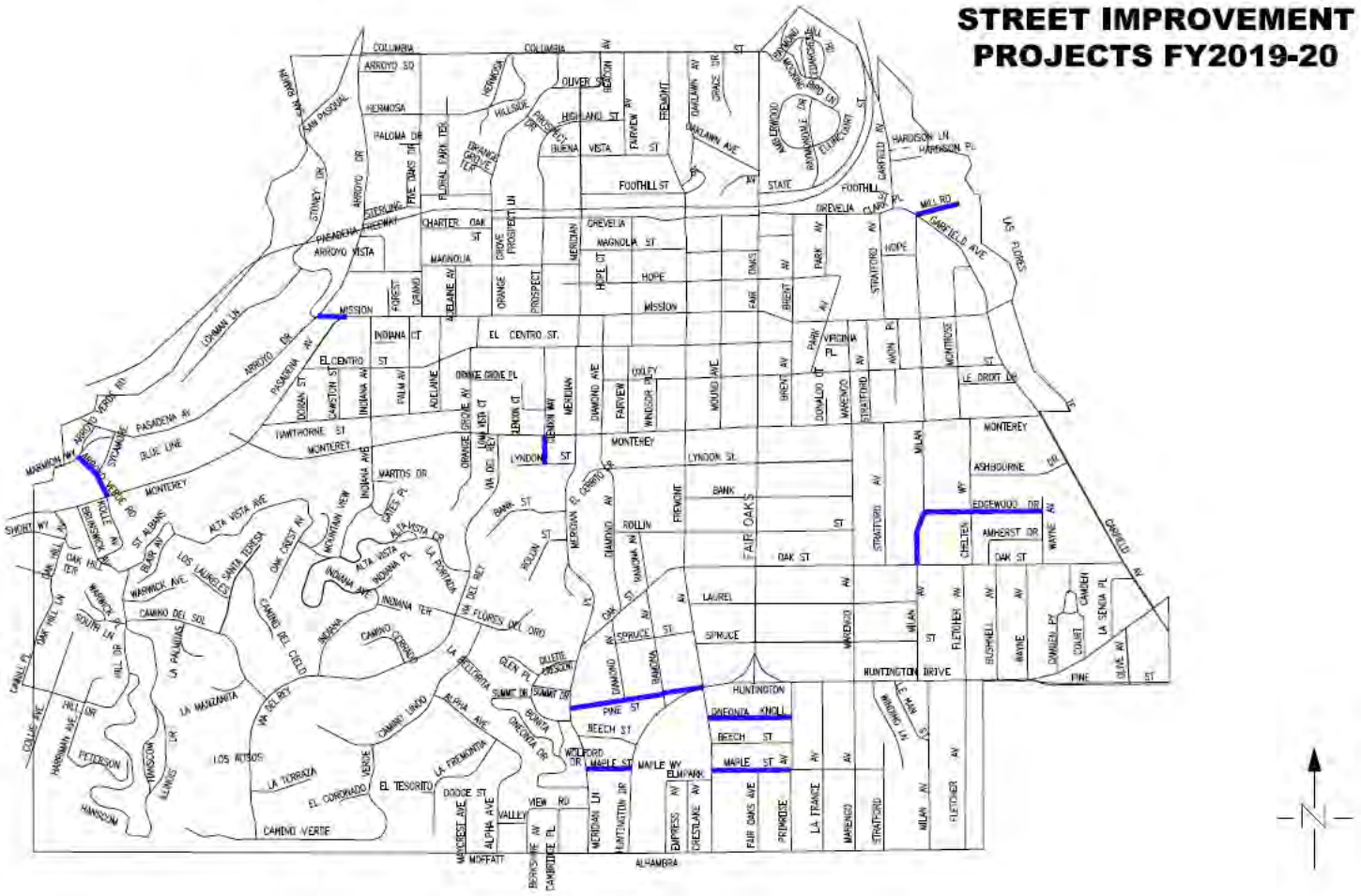
STREET IMPROVEMENT
PROJECTS FY2019-20
COLUMBIA
ARROYO SQ
HERMOSA
PALOMA DR
FOOTHILL ST
STATE
CHARTER OAK ST
MAGNOLIA
CREVELIA
MISSION
EL CENTRO ST.
INDIANA CT
EL CENTRO ST
ORANGE GROVE PL
LYNDON ST
MONTEREY
WARTOS DR
BANK ST
ROLLIN
OAK ST
LAUREL
SPRUCE
HUNTINGTON
PINE ST
BEECH ST
MAPLE ST
MAPLE WY
ELMPARK
DODGE ST
VIEW RD
VALLEY
MOFFATT
ALHAMBRA
MILL RD
GARFIELD AVE
HOPE
VIRGINIA PL
LE DROIT LN
ASHBOURNE DR
EDGEWOOD DR
AMHERST DR
ORANGE GROVE AVE
PASADENA AV
BLUE LINE
MARMION WAY
ARROYO VERDE RD
LOMMAN LN
ARROYO DR
HAWTHORNE ST
SHORT WY
ST ALBANS
ALTA VISTA AVE
WARWICK AVE
CAMINO DEL SOL
LOS LAUREL
SANTA TERESA
OAK CREST AV
MOUNTAIN VIEW
INDIANA AVE
INDIANA TER
CAMINO CORRIDA
CAMINO DEL CIELO
LA PALMAS
LA MANZANITA
VIA SELERO
LOS ALTOS
LA TORRAZA
EL CORONADO
EL TESORITO
CAMINO VERDE
CAMINO UNICO
ALPHA AVE
LA FREMONTA
ONEONTA DR
GLEN PL
SUNNY DR
SUNNY CT
LA BELLEVISTA
LA FONTANA
VIA FLORES DEL ORO
ALTA VISTA DR
ALTA VISTA PL
PETERSON
HANSCOM
HARRIMAN AVE
COLLIE AVE
CABRILL PL
OAK HILL LN
OAK HILL TER
SOUTH LN
HILL DR
ARROYO VISTA
STERLING
FREEWAY
STINNEY DR
LOMMAN LN
ARROYO DR
PASADENA AV
ARROYO VERDE RD
STONEWALL
BLUE LINE
MARMION WAY
HERMOSA
SAN PASQUAL
HILLSDR
HIGHLAND ST
VISTA
FREMONT
FAIRVIEW
OAKLAWN AVE
GRACE DR
ENGLEWOOD
RAYMOND LN
ELDRIDGE CT
HARDISON LN
HARRISON PL
CREVELIA
PARK AV
STRATFORD
MONTROSE
DONALDO CT
WARENDO
MILAN
FLETCHER
BUSHNELL
WAYNE
CHESTER
CAMDEN
CAMDEN CT
LA SENDA PL
FINE ST
OLIVE AV
ORANGE AV
MERIDIAN
DIAMOND AVE
RAMONA AV
WINDSOR RD
WOUND AVE
FAIR OAKS
FAIR OAKS AVE
PRIMROSE
LA FRANCE
CRESTLAKE AV
EMPRESS
MERIDIAN LN
HUNTINGTON DR
ONEONTA KNOLL
WOLFORD DR
CAMBRIDGE PL
BERKSHIRE AV
MARGREST AVE
ALPHA AVE
DIAMOND
RAMONA
ORANGE
PROSPECT
ADELAINE
FOREST
PALM AV
INDIANA
DORAN ST
LAMBERT ST
ARROYO
PARK
BRENT
DUNES
FAIR
ORANGE GROVE PL
LYNDON
LOMA VISTA CT
VIA DEL REY
EL CENTRO
ROLLIN
BANK
OAK
SPRUCE
LAUREL
HUNTINGTON DRIVE
MAPLE
PINE
BEECH
ONEONTA
SUNNY
GLEN
LA FONTANA
LA BELLEVISTA
VIA FLORES DEL ORO
INDIANA
ALTA VISTA
OAK CREST
MOUNTAIN VIEW
WARWICK
CAMINO DEL SOL
LOS LAUREL
SANTA TERESA
ST ALBANS
SHORT WY
OAK HILL
OAK HILL TER
SOUTH LN
HILL DR
CABRILL PL
COLLIE AVE
HARRIMAN AVE
PETERSON
HANSCOM
LOS ALTOS
LA MANZANITA
VIA SELERO
CAMINO DEL CIELO
LA PALMAS
CAMINO CORRIDA
CAMINO UNICO
ALPHA AVE
LA FREMONTA
ONEONTA DR
LA TORRAZA
EL CORONADO
EL TESORITO
CAMINO VERDE
DODGE ST
VIEW RD
VALLEY
MOFFATT
ALHAMBRA
MERIDIAN LN
HUNTINGTON DR
WOLFORD DR
CAMBRIDGE PL
BERKSHIRE AV
MARGREST AVE
ELMPARK
MAPLE WY
MAPLE ST
BEECH ST
PINE ST
ONEONTA KNOLL
HUNTINGTON
SUNNY DR
SUNNY CT
GLEN PL
OLIVE AV
ORANGE AV
MERIDIAN
DIAMOND AVE
RAMONA AV
WINDSOR RD
WOUND AVE
FAIR OAKS
FAIR OAKS AVE
PRIMROSE
LA FRANCE
CRESTLAKE AV
EMPRESS
MERIDIAN LN
HUNTINGTON DR

2.0 ROADWAY CONDITION

Most of the existing pavement was observed to exhibit moderate to severe distress of longitudinal, transverse, and fatigue cracking of approximately 0.20 to 2.0 inches in width. Patching and utility trenches were found. There were no noticeable signs of pavement upheaval at the time of investigation nor did we encounter any ponded water.

Appendix A, *Photograph of Coring Locations,* show typical pavement conditions within project limits.

3.0 FIELD EXPLORATION

Converse cored a total of twenty-nine (29) cores on October 30th and November 2nd, 2020. The cores were from within the travel lanes, intersections, center line of streets, and parking spaces of the locations mentioned below in Table No.1, *Existing Pavement Section*. Coring locations were selected by RKA Group. The locations of the cores can be seen in Drawing Nos. 2a through 2J, *Coring Location Map*.

The cores were advanced using a coring machine with a 4-inch diameter coring bit. Once complete, the holes were backfilled with soil cuttings, patched with cold asphalt concrete, and tamped in layers of approximately two inches.

Pavement cores were collected at each location and representative subgrade soil samples were also collected. Appendix B, *Pavement Core Photos*, includes pictures of pavement cores as requested by City of South Pasadena.

The results of our pavement study can be seen in the following table:

Table No.1, Existing Pavement Section

Core	Corresponding Roadway	AC Thickness (in)	Macadam Thickness (in)	Base Thickness (in)	Subgrade Soil
C-1	Arroyo Verde Rd from Marmion Way to Monterey Rd	2.0	5.0	N/A	Silty Sand (SM)*
C-2	Arroyo Verde Rd from Marmion Way to Monterey Rd	3.0	4.0	N/A	Silt (ML) *
C-3	Arroyo Verde Rd from Marmion Way to Monterey Rd	2.5	4.5	N/A	Silty Sand (SM) *
C-4	Arroyo Verde Rd from Marmion Way to Monterey Rd	2.0	4.5	N/A	Silt (ML)*
C-5	Edgewood Dr from Milan Ave to Wayne Ave	2.25	N/A	N/A	Silty Sand (SM) *
C-6	Edgewood Dr from Milan Ave to Wayne Ave	3.0	N/A	N/A	Silty Sand (SM) *
C-7	Edgewood Dr from Milan Ave to Wayne Ave	2.5	N/A	N/A	Silty Sand (SM) *
C-8	Edgewood Dr from Milan Ave to Wayne Ave	4.0	N/A	5	Sand with Gravel (SP) *

Core	Corresponding Roadway	AC Thickness (in)	Macadam Thickness (in)	Base Thickness (in)	Subgrade Soil
C-9	Glendon Way from Monterey Rd to Lyndon St	6.0	N/A	N/A	Silt with Sand (ML) *
C-10	Glendon Way from Monterey Rd to Lyndon St	5.5	N/A	N/A	Silt with Sand (ML) *
C-11	Maple St from Fremont Ave to Primrose Ave	1.5	4.5	N/A	Silty Sand (SM) *
C-12	Maple St from Fremont Ave to Primrose Ave	2.5	6.0	N/A	Silty Sand (SM) *
C-13	Maple St from Fremont Ave to Primrose Ave	1.0	3.0	N/A	Silty Sand (SM) *
C-14	Maple St from Meridian Ave to Huntington Dr	1.5	2.0	7.5	Silty Sand with Gravel (SM) *
C-15	Maple St from Meridian Ave to Huntington Dr	1.5	2.5	N/A	Silt with Sand (ML) *
C-16	Milan Ave from Edgewood Dr to Oak St	1.0	5.0	N/A	Silty Sand (SM) *
C-17	Milan Ave from Edgewood Dr to Oak St	3.0	4.0	N/A	Silty Sand (SM)*
C-18	Mills Rd from Garfield Ave to CDS	3.0	1.0	N/A	Silty Sand (SM) *
C-19	Mills Rd from Garfield Ave to CDS	3.0	1.0	N/A	Silty Sand (SM) *
C-20	Mission St from Arroyo Dr to Pasadena Ave-Intersection	6.5**	N/A	12.0	Silty Sand with Gravel (SM) *
C-21	Mission St from Arroyo Dr to Pasadena Ave	5.75**	N/A	12.0	Silty Sand with Gravel (SM) *
C-22	Mission St from Arroyo Dr to Pasadena Ave	5.75**	N/A	12.0	Silty Sand with Gravel (SM) *
C-23	Oneonta Knoll St from Fremont Ave to Primrose Ave	2.5	4.0	3.0	Silty Sand with Gravel (SM) *
C-24	Oneonta Knoll St from Fremont Ave to Primrose Ave	2.0	3.0	3.0	Silty Sand with Gravel (SM) *
C-25	Oneonta Knoll St from Fremont Ave to Primrose Ave	1.5	3.0	N/A	Silt with Sand (ML) *
C-26	Pine St from Meridian Ave to Huntington Dr	1.5	4.5	N/A	Silty Sand (SM) *
C-27	Pine St from Meridian Ave to Huntington Dr	1.5	4.5	N/A	Silty Sand (SM) *
C-28	Pine St from Meridian Ave to Huntington Dr	1.5	2.5	N/A	Silt with clay (ML) *
C-29	Pine St from Meridian Ave to Huntington Dr	1.5	2.5	N/A	Silt with Sand (ML)

*Subgrade soil classification was based on visual classification per ASTM D2488
** Rigid Pavement, Cement Concrete



Arroyo Verde Rd from Marmion Way to Monterey Rd

LEGEND

APPROXIMATE CORING LOCATION

N

Coring Location Map

Converse Consultants

City of South Pasadena FY19-20 Street Improvement Project
For: Public Works Department
South Pasadena , CA

PROJECT NO. 20-31-166-01

DRAWING NO. 2A



Edgewood Dr from Milan Ave to Wayne Ave

LEGEND

APPROXIMATE CORING LOCATION

N

Coring Location Map

Converse Consultants

City of South Pasadena FY19-20 Street Improvement Project
For: Public Works Department
South Pasadena , CA

PROJECT NO. 20-31-166-01

DRAWING NO. 2B



Glendon Way from Monterey Rd to Lyndon St

LEGEND

APPROXIMATE CORING LOCATION

N

Coring Location Map

Converse Consultants

City of South Pasadena FY19-20 Street Improvement Project
For: Public Works Department
South Pasadena , CA

PROJECT NO. 20-31-166-01

DRAWING NO. 2C



Maple St from Fremont Ave to Primrose Ave

LEGEND

APPROXIMATE CORING LOCATION

N

Coring Location Map

Converse Consultants

City of South Pasadena FY19-20 Street Improvement Project
For: Public Works Department
South Pasadena , CA

PROJECT NO. 20-31-166-01

DRAWING NO. 2D



Maple St from Meridian Ave to Huntington Dr

LEGEND

APPROXIMATE CORING LOCATION

N

Coring Location Map

Converse Consultants

City of South Pasadena FY19-20 Street Improvement Project
For: Public Works Department
South Pasadena , CA

PROJECT NO. 20-31-166-01

DRAWING NO. 2E



Milan Ave from Edgewood Dr to Oak St

LEGEND

APPROXIMATE CORING LOCATION

Coring Location Map

Converse Consultants

City of South Pasadena FY19-20 Street Improvement Project
For: Public Works Department
South Pasadena , CA

PROJECT NO. 20-31-166-01

DRAWING NO. 2F



Mills Rd from Garfield Ave to CDS

LEGEND

APPROXIMATE CORING LOCATION

N

Coring Location Map

Converse Consultants

City of South Pasadena FY19-20 Street Improvement Project
For: Public Works Department
South Pasadena , CA

PROJECT NO. 20-31-166-01

DRAWING NO. 2G



Mission St from Arroyo Dr to Pasadena Ave

LEGEND

APPROXIMATE CORING LOCATION

N

Coring Location Map

Converse Consultants

City of South Pasadena FY19-20 Street Improvement Project
For: Public Works Department
South Pasadena , CA

PROJECT NO. 20-31-166-01

DRAWING NO. 2H



Oneonta Knoll St from Fremont Ave to Primrose Ave

LEGEND

APPROXIMATE CORING LOCATION

N

Coring Location Map

Converse Consultants

City of South Pasadena FY19-20 Street Improvement Project
For: Public Works Department
South Pasadena , CA

PROJECT NO. 20-31-166-01

DRAWING NO. 2I

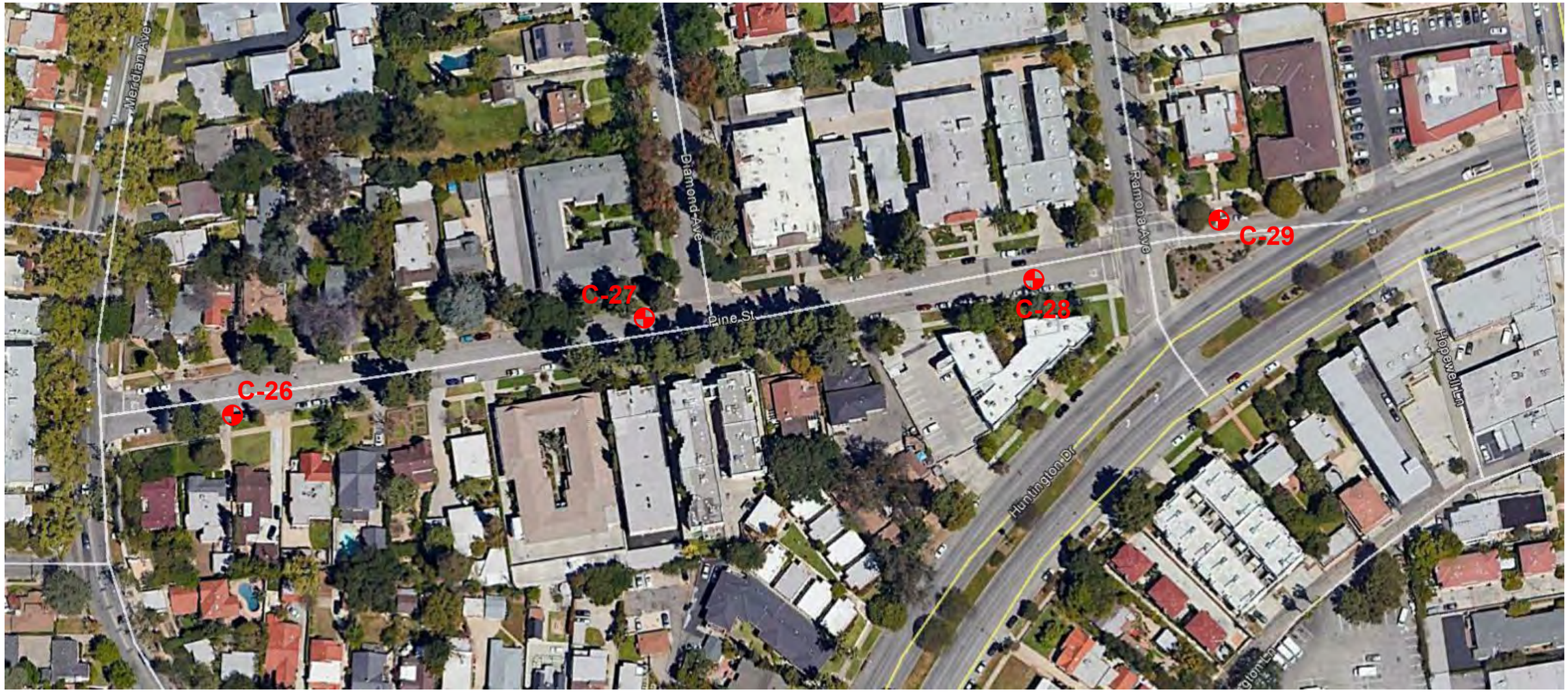

Pine St from Meridian Ave to Huntington Dr

LEGEND

APPROXIMATE CORING LOCATION

N

Coring Location Map

Converse Consultants

City of South Pasadena FY19-20 Street Improvement Project
For: Public Works Department
South Pasadena , CA

PROJECT NO. 20-31-166-01

DRAWING NO. 2J

4.0 CLOSURE

Our findings were prepared in accordance with generally accepted professional engineering practice in this area of Southern California.

We appreciate the opportunity to be of service to RKA Consulting Group. If you have any questions or require additional information, please call the undersigned at (626) 930-1275.

CONVERSE CONSULTANTS





Siva K. Sivathasan, PhD, PE, GE, DGE, QSD, F. ASCE
Senior Vice President / Principal Engineer

Dist: 1/Addressee via Email

Appendix A

Photograph of Coring Locations



ARROYO VERDE ROAD FROM MARMION WAY TO MONTEREY ROAD AT C-1

	Converse Consultants	City of South Pasadena FY19-20 Street Improvement Project For: City of South Pasadena Public Works South Pasadena, California	Project No. 20-31-166-01	Photograph No. **A-1**



ARROYO VERDE ROAD FROM MARMION WAY TO MONTEREY ROAD AT C-2

	Converse Consultants	City of South Pasadena FY19-20 Street Improvement Project For: City of South Pasadena Public Works South Pasadena, California	Project No. 20-31-166-01	Photograph No. **A-2**



ARROYO VERDE ROAD FROM MARMION WAY TO MONTEREY ROAD AT C-3

	Converse Consultants	City of South Pasadena FY19-20 Street Improvement Project For: City of South Pasadena Public Works South Pasadena, California	Project No. 20-31-166-01	Photograph No. **A-3**



ARROYO VERDE ROAD FROM MARMION WAY TO MONTEREY ROAD AT C-4

Converse Consultants	City of South Pasadena FY19-20 Street Improvement Project For: City of South Pasadena Public Works South Pasadena, California	Project No. 20-31-166-01	Photograph No. **A-4**



EDGEWOOD DRIVE FROM MILAN AVENUE TO WAYNE AVENUE AT C-5

	Converse Consultants	City of South Pasadena FY19-20 Street Improvement Project For: City of South Pasadena Public Works South Pasadena, California	Project No. 20-31-166-01	Photograph No. **A-5**



EDGEWOOD DRIVE FROM MILAN AVENUE TO WAYNE AVENUE AT C-6

	Converse Consultants	City of South Pasadena FY19-20 Street Improvement Project For: City of South Pasadena Public Works South Pasadena, California	Project No. 20-31-166-01	Photograph No. **A-6**



EDGEWOOD DRIVE FROM MILAN AVENUE TO WAYNE AVENUE AT C-7

Converse Consultants	City of South Pasadena FY19-20 Street Improvement Project For: City of South Pasadena Public Works South Pasadena, California	Project No. 20-31-166-01	Photograph No. **A-7**



EDGEWOOD DRIVE FROM MILAN AVENUE TO WAYNE AVENUE AT C-8

Converse Consultants	City of South Pasadena FY19-20 Street Improvement Project For: City of South Pasadena Public Works South Pasadena, California	Project No. 20-31-166-01	Photograph No. **A-8**



GLENDON WAY FROM MONTEREY ROAD TO LYNDON STREET AT C-9

	Converse Consultants	City of South Pasadena FY19-20 Street Improvement Project For: City of South Pasadena Public Works South Pasadena, California	Project No. 20-31-166-01	Photograph No. **A-9**



GLENDON WAY FROM MONTEREY ROAD TO LYNDON STREET AT C-10

Converse Consultants	City of South Pasadena FY19-20 Street Improvement Project For: City of South Pasadena Public Works South Pasadena, California	Project No. 20-31-166-01	Photograph No. **A-10**



MAPLE STREET FROM FREMONT AVENUE TO PRIMROSE AVENUE AT C-11

Converse Consultants	City of South Pasadena FY19-20 Street Improvement Project For: City of South Pasadena Public Works South Pasadena, California	Project No. 20-31-166-01	Photograph No. **A-11**



MAPLE STREET FROM FREMONT AVENUE TO PRIMROSE AVENUE AT C-12

	Converse Consultants	City of South Pasadena FY19-20 Street Improvement Project For: City of South Pasadena Public Works South Pasadena, California	Project No. 20-31-166-01	Photograph No. **A-12**



MAPLE STREET FROM FREMONT AVENUE TO PRIMROSE AVENUE AT C-13

	Converse Consultants	City of South Pasadena FY19-20 Street Improvement Project For: City of South Pasadena Public Works South Pasadena, California	Project No. 20-31-166-01	Photograph No. **A-13**



MAPLE STREET FROM FREMONT AVENUE TO PRIMROSE AVENUE AT C-14

	Converse Consultants	City of South Pasadena FY19-20 Street Improvement Project For: City of South Pasadena Public Works South Pasadena, California	Project No. 20-31-166-01	Photograph No. **A-14**



MAPLE STREET FROM MERIDIAN AVENUE TO HUNTINGTON DRIVE AT C-15

	Converse Consultants	City of South Pasadena FY19-20 Street Improvement Project For: City of South Pasadena Public Works South Pasadena, California	Project No. 20-31-166-01	Photograph No. **A-15**



MAPLE STREET FROM MERIDIAN AVENUE TO HUNTINGTON DRIVE AT C-16

	Converse Consultants	City of South Pasadena FY19-20 Street Improvement Project For: City of South Pasadena Public Works South Pasadena, California	Project No. 20-31-166-01	Photograph No. **A-16**



MAPLE STREET FROM MERIDIAN AVENUE TO HUNTINGTON DRIVE AT C-17

	Converse Consultants	City of South Pasadena FY19-20 Street Improvement Project For: City of South Pasadena Public Works South Pasadena, California	Project No. 20-31-166-01	Photograph No. **A-17**



MILLS ROAD FROM GARFIELD AVENUE TO CDS AT C-18

Converse Consultants	City of South Pasadena FY19-20 Street Improvement Project For: City of South Pasadena Public Works South Pasadena, California	Project No. 20-31-166-01	Photograph No. **A-18**



MILLS ROAD FROM GARFIELD AVENUE TO CDS AT C-19

Converse Consultants	City of South Pasadena FY19-20 Street Improvement Project For: City of South Pasadena Public Works South Pasadena, California	Project No. 20-31-166-01	Photograph No. **A-19**



MISSION STREET FROM ARROYO DRIVE TO PASADENA AVENUE--INTERSECTION AT C-20

	Converse Consultants	City of South Pasadena FY19-20 Street Improvement Project For: City of South Pasadena Public Works South Pasadena, California	Project No. 20-31-166-01	Photograph No. **A-20**



MISSION STREET FROM ARROYO DRIVE TO PASADENA AVENUE--INTERSECTION AT C-21

	Converse Consultants	City of South Pasadena FY19-20 Street Improvement Project For: City of South Pasadena Public Works South Pasadena, California	Project No. 20-31-166-01	Photograph No. **A-21**



MISSION STREET FROM ARROYO DRIVE TO PASADENA AVENUE--INTERSECTION AT C-22

	Converse Consultants	City of South Pasadena FY19-20 Street Improvement Project For: City of South Pasadena Public Works South Pasadena, California	Project No. 20-31-166-01	Photograph No. **A-22**



ONEONTA KNOLL STREET FROM FREMONT AVENUE TO PRIMROSE AVENUE AT C-23

	Converse Consultants	City of South Pasadena FY19-20 Street Improvement Project For: City of South Pasadena Public Works South Pasadena, California	Project No. 20-31-166-01	Photograph No. **A-23**



ONEONTA KNOLL STREET FROM FREMONT AVENUE TO PRIMROSE AVENUE AT C-24

	Converse Consultants	City of South Pasadena FY19-20 Street Improvement Project For: City of South Pasadena Public Works South Pasadena, California	Project No. 20-31-166-01	Photograph No. **A-24**



ONEONTA KNOLL STREET FROM FREMONT AVENUE TO PRIMROSE AVENUE AT C-25

	Converse Consultants	City of South Pasadena FY19-20 Street Improvement Project For: City of South Pasadena Public Works South Pasadena, California	Project No. 20-31-166-01	Photograph No. **A-25**



PINE STREET FROM MERIDIAN AVENUE TO HUNTINGTON DRIVE AT C-26

Converse Consultants	City of South Pasadena FY19-20 Street Improvement Project For: City of South Pasadena Public Works South Pasadena, California	Project No. 20-31-166-01	Photograph No. **A-26**



PINE STREET FROM MERIDIAN AVENUE TO HUNTINGTON DRIVE AT C-27

Converse Consultants	City of South Pasadena FY19-20 Street Improvement Project For: City of South Pasadena Public Works South Pasadena, California	Project No. 20-31-166-01	Photograph No. **A-27**



PINE STREET FROM MERIDIAN AVENUE TO HUNTINGTON DRIVE AT C-28

	Converse Consultants	City of South Pasadena FY19-20 Street Improvement Project For: City of South Pasadena Public Works South Pasadena, California	Project No. 20-31-166-01	Photograph No. **A-28**



PINE STREET FROM MERIDIAN AVENUE TO HUNTINGTON DRIVE AT C-29

Converse Consultants	City of South Pasadena FY19-20 Street Improvement Project For: City of South Pasadena Public Works South Pasadena, California	Project No. 20-31-166-01	Photograph No. **A-29**

Appendix B

Pavement Core Photos



ARROYO VERDE ROAD FROM MARMION WAY TO MONTEREY ROAD AT C-1

	Converse Consultants	City of South Pasadena FY19-20 Street Improvement Project For: City of South Pasadena Public Works South Pasadena, California	Project No. 20-31-166-01	Photograph No. **B-1**



ARROYO VERDE ROAD FROM MARMION WAY TO MONTEREY ROAD AT C-2

	Converse Consultants	City of South Pasadena FY19-20 Street Improvement Project For: City of South Pasadena Public Works South Pasadena, California	Project No. 20-31-166-01	Photograph No. **B-2**



ARROYO VERDE ROAD FROM MARMION WAY TO MONTEREY ROAD AT C-3

Converse Consultants	City of South Pasadena FY19-20 Street Improvement Project For: City of South Pasadena Public Works South Pasadena, California	Project No. 20-31-166-01	Photograph No. **B-3**



ARROYO VERDE ROAD FROM MARMION WAY TO MONTEREY ROAD AT C-4

	Converse Consultants	City of South Pasadena FY19-20 Street Improvement Project For: City of South Pasadena Public Works South Pasadena, California	Project No. 20-31-166-01	Photograph No. **B-4**



EDGEWOOD DRIVE FROM MILAN AVENUE TO WAYNE AVENUE AT C-5

Converse Consultants	City of South Pasadena FY19-20 Street Improvement Project For: City of South Pasadena Public Works South Pasadena, California	Project No. 20-31-166-01	Photograph No. **B-5**



EDGEWOOD DRIVE FROM MILAN AVENUE TO WAYNE AVENUE AT C-6

Converse Consultants	City of South Pasadena FY19-20 Street Improvement Project For: City of South Pasadena Public Works South Pasadena, California	Project No. 20-31-166-01	Photograph No. **B-6**



EDGEWOOD DRIVE FROM MILAN AVENUE TO WAYNE AVENUE AT C-7

	Converse Consultants	City of South Pasadena FY19-20 Street Improvement Project For: City of South Pasadena Public Works South Pasadena, California	Project No. 20-31-166-01	Photograph No. **B-7**



EDGEWOOD DRIVE FROM MILAN AVENUE TO WAYNE AVENUE AT C-8

	Converse Consultants	City of South Pasadena FY19-20 Street Improvement Project For: City of South Pasadena Public Works South Pasadena, California	Project No. 20-31-166-01	Photograph No. **B-8**



GLENDON WAY FROM MONTEREY ROAD TO LYNDON STREET AT C-9

Converse Consultants	City of South Pasadena FY19-20 Street Improvement Project For: City of South Pasadena Public Works South Pasadena, California	Project No. 20-31-166-01	Photograph No. **B-9**



GLENDON WAY FROM MONTEREY ROAD TO LYNDON STREET AT C-10

	Converse Consultants	City of South Pasadena FY19-20 Street Improvement Project For: City of South Pasadena Public Works South Pasadena, California	Project No. 20-31-166-01	Photograph No. **B-10**



MAPLE STREET FROM FREMONT AVENUE TO PRIMROSE AVENUE AT C-11

	Converse Consultants	City of South Pasadena FY19-20 Street Improvement Project For: City of South Pasadena Public Works South Pasadena, California	Project No. 20-31-166-01	Photograph No. **B-11**



MAPLE STREET FROM FREMONT AVENUE TO PRIMROSE AVENUE AT C-12

Converse Consultants	City of South Pasadena FY19-20 Street Improvement Project For: City of South Pasadena Public Works South Pasadena, California	Project No. 20-31-166-01	Photograph No. **B-12**



MAPLE STREET FROM FREMONT AVENUE TO PRIMROSE AVENUE AT C-13

Converse Consultants	City of South Pasadena FY19-20 Street Improvement Project For: City of South Pasadena Public Works South Pasadena, California	Project No. 20-31-166-01	Photograph No. **B-13**



MAPLE STREET FROM FREMONT AVENUE TO PRIMROSE AVENUE AT C-14

Converse Consultants	City of South Pasadena FY19-20 Street Improvement Project For: City of South Pasadena Public Works South Pasadena, California	Project No. 20-31-166-01	Photograph No. **B-14**



MAPLE STREET FROM MERIDIAN AVENUE TO HUNTINGTON DRIVE AT C-15

Converse Consultants	City of South Pasadena FY19-20 Street Improvement Project For: City of South Pasadena Public Works South Pasadena, California	Project No. 20-31-166-01	Photograph No. **B-15**



MAPLE STREET FROM MERIDIAN AVENUE TO HUNTINGTON DRIVE AT C-16

Converse Consultants	City of South Pasadena FY19-20 Street Improvement Project For: City of South Pasadena Public Works South Pasadena, California	Project No. 20-31-166-01	Photograph No. **B-16**



MAPLE STREET FROM MERIDIAN AVENUE TO HUNTINGTON DRIVE AT C-17

Converse Consultants	City of South Pasadena FY19-20 Street Improvement Project For: City of South Pasadena Public Works South Pasadena, California	Project No. 20-31-166-01	Photograph No. **B-17**



MILLS ROAD FROM GARFIELD AVENUE TO CDS AT C-18

Converse Consultants	City of South Pasadena FY19-20 Street Improvement Project For: City of South Pasadena Public Works South Pasadena, California	Project No. 20-31-166-01	Photograph No. **B-18**



MILLS ROAD FROM GARFIELD AVENUE TO CDS AT C-19

Converse Consultants	City of South Pasadena FY19-20 Street Improvement Project For: City of South Pasadena Public Works South Pasadena, California	Project No. 20-31-166-01	Photograph No. **B-19**



MISSION STREET FROM ARROYO DRIVE TO PASADENA AVENUE--INTERSECTION AT C-20

	Converse Consultants	City of South Pasadena FY19-20 Street Improvement Project For: City of South Pasadena Public Works South Pasadena, California	Project No. 20-31-166-01	Photograph No. **B-20**

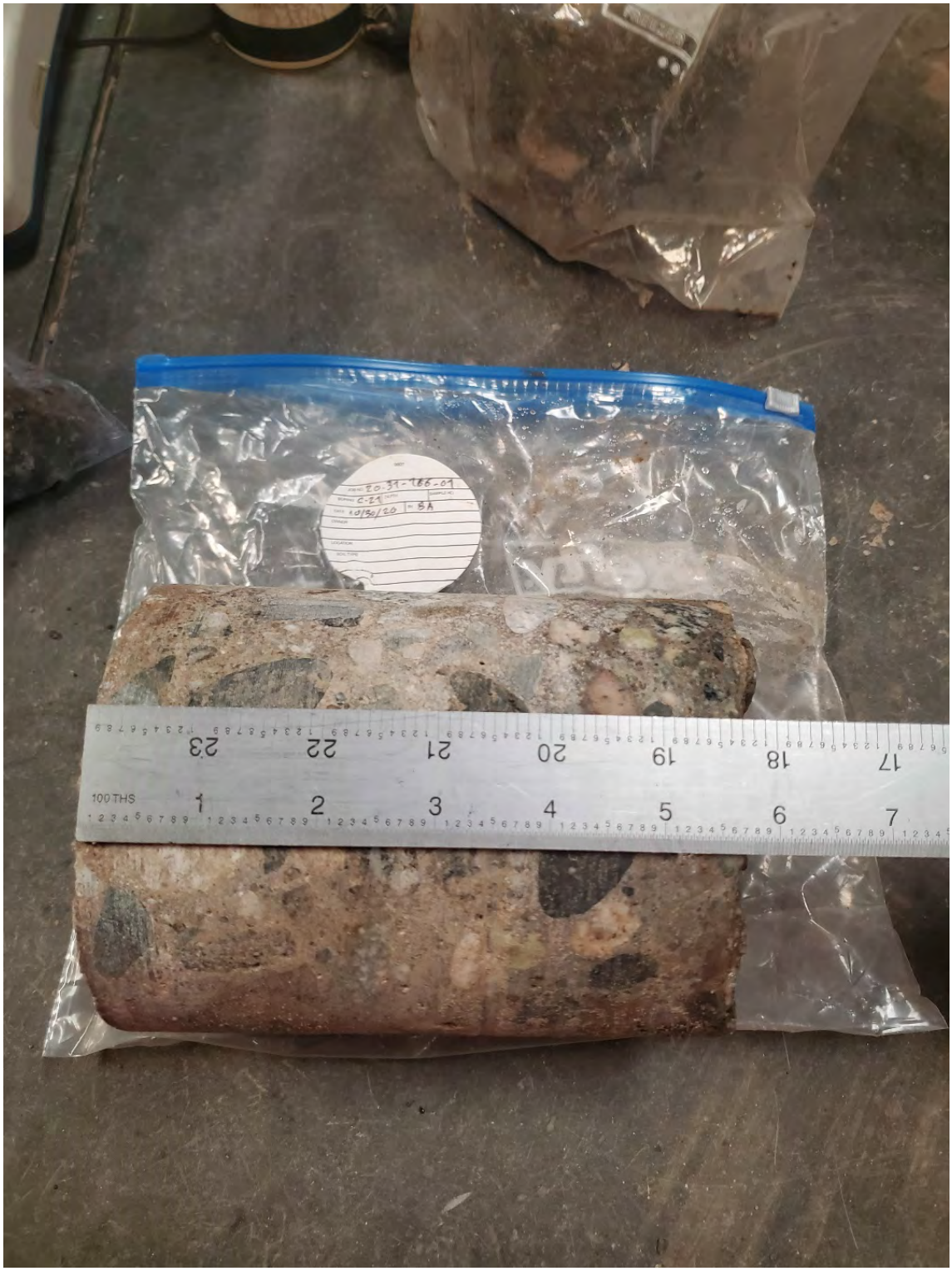

MISSION STREET FROM ARROYO DRIVE TO PASADENA AVENUE--INTERSECTION AT C-21

	Converse Consultants	City of South Pasadena FY19-20 Street Improvement Project For: City of South Pasadena Public Works South Pasadena, California	Project No. 20-31-166-01	Photograph No. **B-21**



MISSION STREET FROM ARROYO DRIVE TO PASADENA AVENUE--INTERSECTION AT C-22

	Converse Consultants	City of South Pasadena FY19-20 Street Improvement Project For: City of South Pasadena Public Works South Pasadena, California	Project No. 20-31-166-01	Photograph No. **B-22**



ONEONTA KNOLL STREET FROM FREMONT AVENUE TO PRIMROSE AVENUE AT C-23

	Converse Consultants	City of South Pasadena FY19-20 Street Improvement Project For: City of South Pasadena Public Works South Pasadena, California	Project No. 20-31-166-01	Photograph No. **B-23**



ONEONTA KNOLL STREET FROM FREMONT AVENUE TO PRIMROSE AVENUE AT C-24

	Converse Consultants	City of South Pasadena FY19-20 Street Improvement Project For: City of South Pasadena Public Works South Pasadena, California	Project No. 20-31-166-01	Photograph No. **B-24**



ONEONTA KNOLL STREET FROM FREMONT AVENUE TO PRIMROSE AVENUE AT C-25

	Converse Consultants	City of South Pasadena FY19-20 Street Improvement Project For: City of South Pasadena Public Works South Pasadena, California	Project No. 20-31-166-01	Photograph No. **B-25**



PINE STREET FROM MERIDIAN AVENUE TO HUNTINGTON DRIVE AT C-26

Converse Consultants	City of South Pasadena FY19-20 Street Improvement Project For: City of South Pasadena Public Works South Pasadena, California	Project No. 20-31-166-01	Photograph No. **B-26**



PINE STREET FROM MERIDIAN AVENUE TO HUNTINGTON DRIVE AT C-27

Converse Consultants	City of South Pasadena FY19-20 Street Improvement Project For: City of South Pasadena Public Works South Pasadena, California	Project No. 20-31-166-01	Photograph No. **B-27**



PINE STREET FROM MERIDIAN AVENUE TO HUNTINGTON DRIVE AT C-28

Converse Consultants	City of South Pasadena FY19-20 Street Improvement Project For: City of South Pasadena Public Works South Pasadena, California	Project No. 20-31-166-01	Photograph No. **B-28**



PINE STREET FROM MERIDIAN AVENUE TO HUNTINGTON DRIVE AT C-29

Converse Consultants	City of South Pasadena FY19-20 Street Improvement Project For: City of South Pasadena Public Works South Pasadena, California	Project No. 20-31-166-01	Photograph No. **B-29**

APPENDIX III

FY 19-20 STREET IMPROVEMENT PROJECT
PROJECT SPECIFICATION NO. 2020-01 (002001)
IN THE CITY OF SOUTH PASADENA, CALIFORNIA

Los Angeles County Waterworks Standards

Approved for use on June 7, 2023
294856.v3

FLUSHOUT 2" BURIED

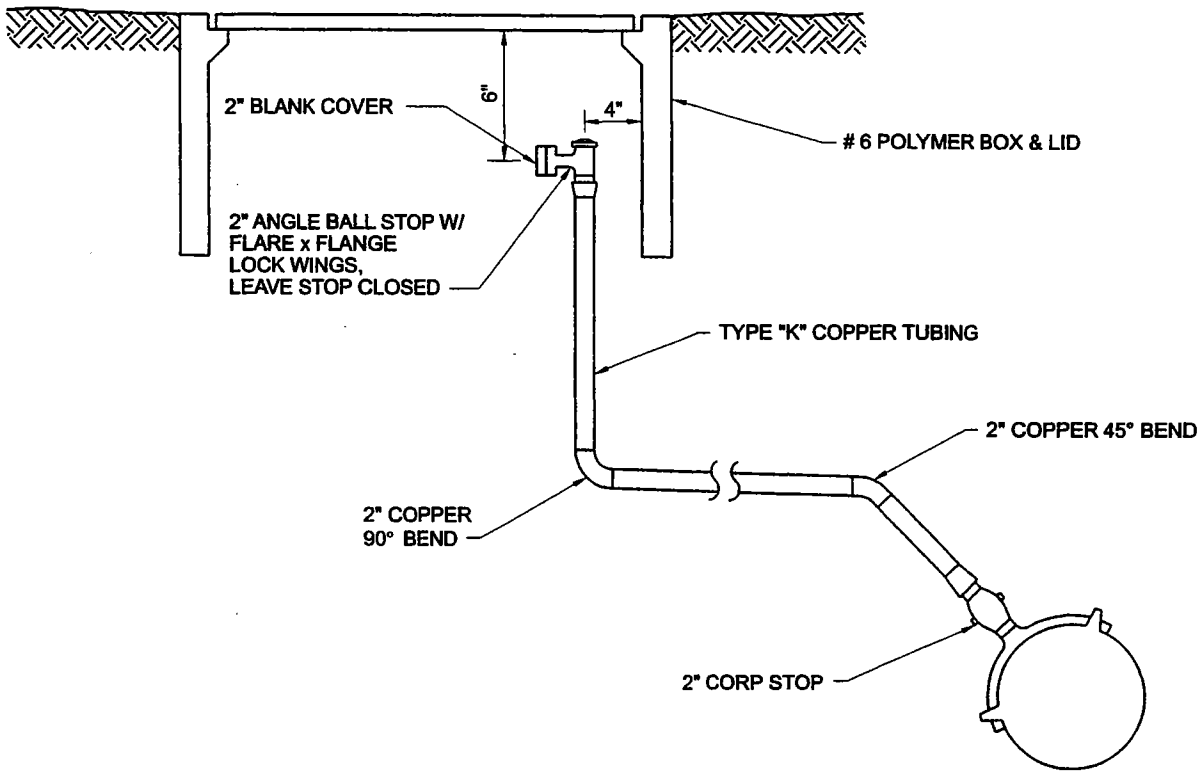

STANDARD SERVICE CONNECTION - 2" COPPER

NTS

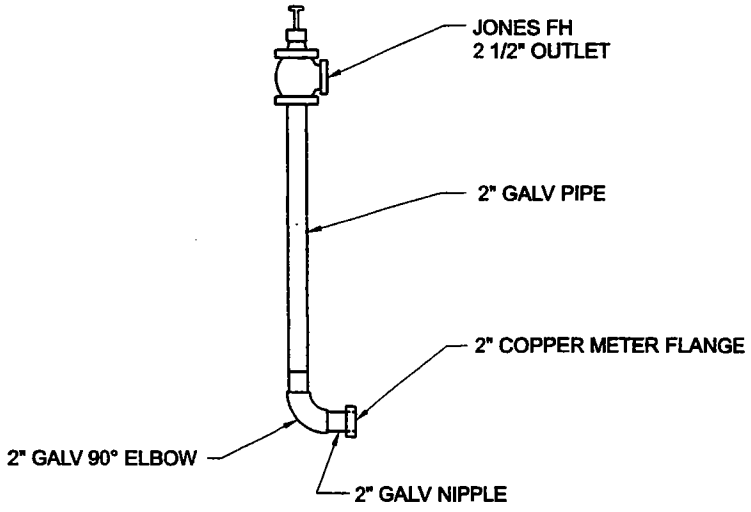

GENERAL NOTE : SEE STANDARD PLANS W-5, W-7, & W-36

LOS ANGELES COUNTY WATERWORKS DISTRICTS

DEPARTMENT OF PUBLIC WORKS

STANDARD PLAN

W-4

APPROVED _____ ASSISTANT DEPUTY DIRECTOR

APRIL 2004 DATE

SHEET 1 OF 1

WATER SERVICE CONNECTION AND METER

(2" AND SMALLER, 149 PSI MAX WWP)

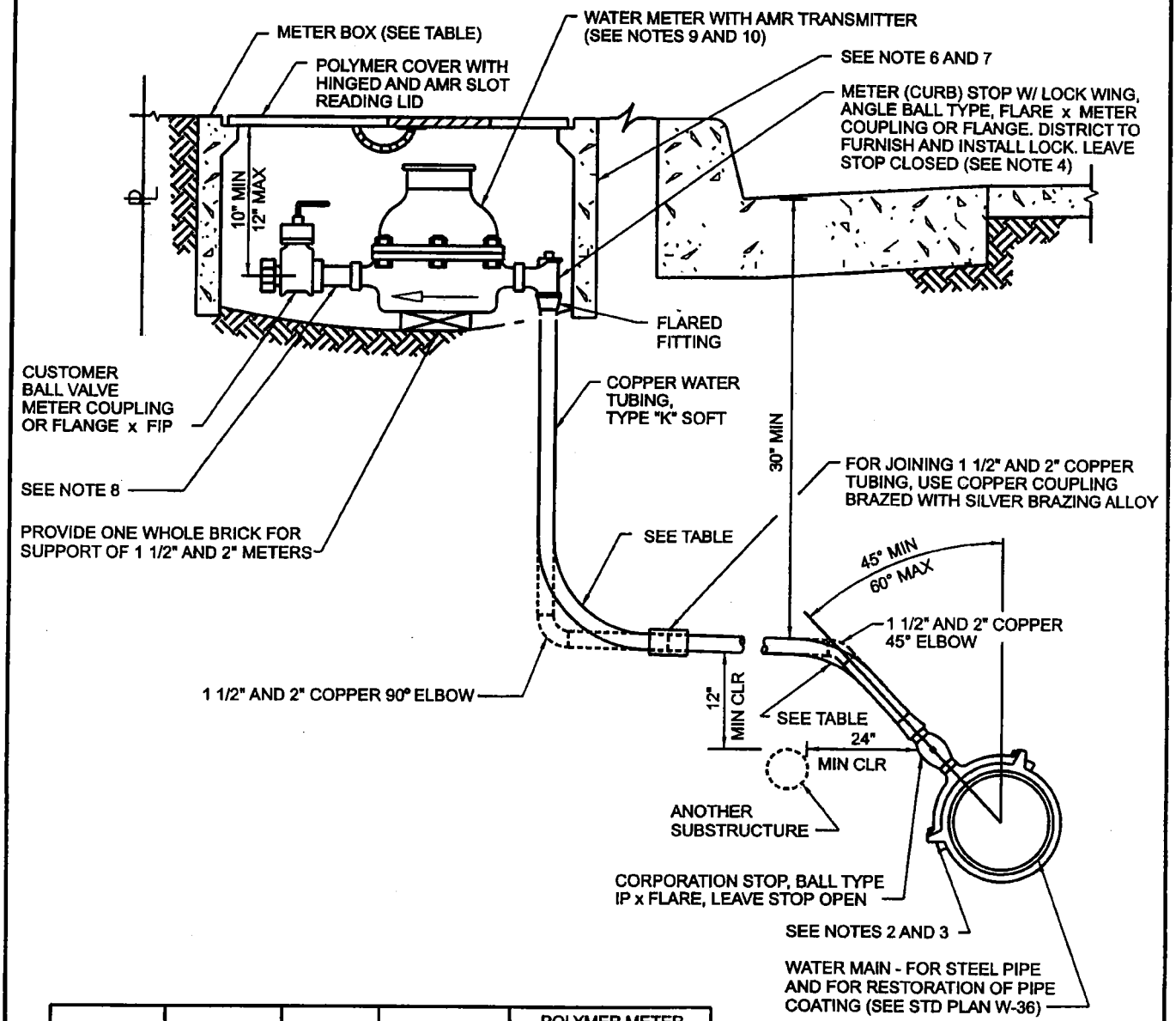

METER VALVE SIZE	MAIN BALL VALVE SIZE	MIN SIZE TUBING	MIN RADIUS TUBING BEND	POLYMER METER BOX NOMINAL INSIDE DIMENSION
3/4 " X 1"	1"	1"	18"	13"W x 24"L x 12"D
1"	1"	1"	18"	13"W x 24"L x 12"D
1 1/2"	1 1/2"	1 1/2"	COPPER ELBOW	17"W x 30"L x 12"D
2"	2"	2"	COPPER ELBOW	17"W x 30"L x 12"D

NTS

LOS ANGELES COUNTY WATERWORKS DISTRICTS

DEPARTMENT OF PUBLIC WORKS

APPROVED _____ ASSISTANT DEPUTY DIRECTOR

MAY 2007 DATE

STANDARD PLAN

W-5

SHEET 1 OF 2

GENERAL NOTES:

1. NO METER BOX SHALL BE INSTALLED CLOSER THAN TEN (10) FEET FROM EDGE OF DRIVEWAY APRON (TOP OF X), OR TEN (10) FEET FROM THE PROJECTION OF THE EDGE OF THE GARAGE OPENING, WHICHEVER PROVIDES THE LARGEST SEPARATION BETWEEN THE METER BOX AND THE DRIVEWAY.

   NO METER BOX SHALL BE INSTALLED IN A LOCATION WHERE VEHICLE LOADING MAY DAMAGE THE METER BOX AND/OR METER.

   NO METER BOX SHALL BE INSTALLED ADJACENT TO SIDEWALK TRANSITIONS WHERE WALKWAY IS NOT PARALLEL TO STREET.

2. MINIMUM DISTANCE BETWEEN SERVICE TAPS ON MAIN TO A BELL, COUPLING, JOINT, OR FITTING IS 36".

3. USE MALLEABLE-IRON OR DUCTILE-IRON DOUBLE STRAP CLAMPS ON CAST IRON, DUCTILE-IRON, AND STEEL PIPE (LESS THAN 10 GA WALL THICKNESS). USE BRONZE DOUBLE STRAP CLAMPS ON ACP. USE A WELDED THREADED OUTLET ON STEEL PIPE (WALL THICKNESS 10 GA AND GREATER). ON ALL METALLIC MAINS, INSTALL AN INSULATING BUSHING BETWEEN CLAMP OR WELDED THREADED OUTLET AND STOP. CLAMP OR WELDED OUTLET SHALL HAVE OUTLET ONE SIZE LARGER THAN STOP TO ALLOW FOR BUSHING. (SEE STANDARD PLAN W-36.)

4. TEST AT SYSTEM PRESSURE AND FLUSH SERVICE LINE BEFORE LOCKING.

5. ONLY EXCAVATED SOIL OR BACKFILL MATERIAL APPROVED BY DISTRICT IS TO BE USED TO BACKFILL TRENCH. NO TRASH IS TO BE LEFT IN TRENCH.

6. FRONT EDGE OF METER BOX TO BE PLACED AGAINST REAR OF CURB EXCEPT WHEN THERE IS A SIDEWALK ADJACENT TO REAR OF CURB. THEN, FRONT EDGE OF METER BOX TO BE PLACED AGAINST REAR OF SIDEWALK.

7. ALL SERVICE CONNECTIONS SHALL BE INSTALLED FROM THE MAIN IN THE STREET FROM WHICH THE SERVICE IS ADDRESSED, AT RIGHT ANGLES TO THE WATER MAIN, LOCATED AS SHOWN ON PLANS OR DIRECTED BY THE DISTRICT, AND NOT CLOSER THAN TEN (10) FEET TO ANY DRIVEWAY (TOP OF X), GARAGE OPENING, WALKWAY, CURB RETURN, OR OTHER UTILITY UNLESS OTHERWISE NOTED ON PLAN.

8. ALL 1 1/2-INCH AND 2-INCH METERS SHALL HAVE FLANGE CONNECTIONS ON THE MAIN CASE, AND ALL NECESSARY BOLTS, NUTS, AND RUBBER GASKETS.

9. METERED WATER SERVICE CONNECTIONS MAY ONLY BE INSTALLED UNDER DISTRICT SUPERVISION, AFTER RECEIPT AND PROCESSING OF WATER SERVICE APPLICATION BY THE DISTRICT AND PAYMENT OF ALL APPLICABLE CHARGES.

10. THE WATER METER MUST BE COMPATIBLE WITH THE DISTRICT'S AUTOMATED METER READING (AMR) SYSTEM. FOR DETAILS, SEE METER SPECIFICATIONS ISSUED AT THE TIME OF APPLICATION FOR WATER SERVICE.

FIRE HYDRANT - COMPLETE

(200 PSI MAX WWP LATERAL AT RIGHT ANGLE TO MAIN)

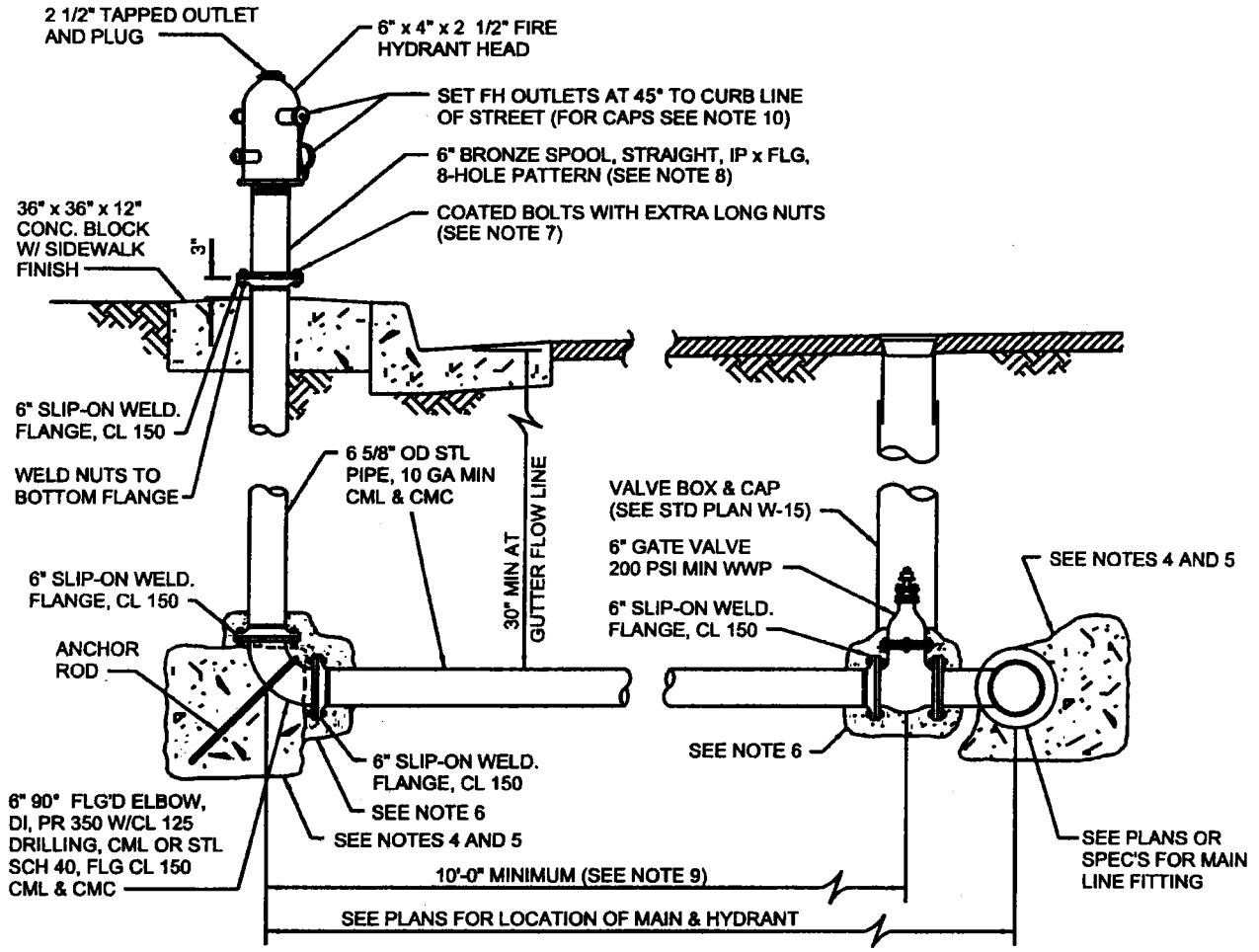

NTS

GENERAL NOTES:

1. IN THE ABSENCE OF A CURB, SET BOTTOM OUTLET 24-INCHES ABOVE CROWN OF ROAD AND PROVIDE STEEL PIPE BARRICADES AS DIRECTED BY DISTRICT (SEE STD. PLAN W-14).
2. CENTERLINE OF RISER SHALL BE TWO (2) FEET BEHIND CURB FACE EXCEPT WHERE SIDEWALK IS ADJACENT TO CURB, IN WHICH CASE THE RISER SHALL BE AS SHOWN ON THE PLANS NOT TO EXCEED A DISTANCE OF SEVEN (7) FEET FROM CURB FACE. (REFER TO STREET ENCROACHMENT PERMIT).
3. NO FIRE HYDRANT SHALL BE INSTALLED CLOSER THAN TEN (10) FEET FROM EDGE OF ANY DRIVEWAY APRON (TOP OF X), CURB RETURN, OR FIVE (5) FEET FROM OTHER UTILITY.
4. USE 2000 PSI MINIMUM CONCRETE FOR THRUST BLOCKS AND HYDRANT PAD. PLACE CONCRETE ON UNDISTURBED OR COMPACTED SOIL.
5. SEE STD. PLAN W-21 FOR THRUST BLOCK REQUIREMENTS.
6. ALL UNCOATED METAL SURFACES INCLUDING BOLTS INSTALLED UNDERGROUND ARE TO BE "DIAPERED" AND GROUTED WITH 900 - 1000 PSI CEMENT MORTAR (1 CEMENT: 3 SAND: 1 LIME) TO PROVIDE A 2-INCH THICK COATING.
7. THE BOLTS AND NUTS CALLED FOR AT THE TOP FLANGE CONNECTION ON THE RISER SHALL BE 3/4" COATED "BLUE" BOLTS.
8. THE EXTERIOR OF THE ABOVE GROUND PORTION OF THE HYDRANT, EXCEPT FOR THE THREADS, SHALL BE PAINTED WITH 2 COATS OF DISTRICT APPROVED RED PRIMER AND 2 COATS OF DISTRICT APPROVED SAFETY YELLOW.
9. INTERMEDIATE PIPE JOINTS IN LATERAL SHALL BE EITHER LAP OR BELL, WELDED OR FLANGED. PIPE SHALL BE INSTALLED HORIZONTAL OR SLOPING DOWNWARD FROM MAIN TO PROVIDE MINIMUM COVER. AN ADDITIONAL VALVE MAY BE REQUIRED AS SHOWN ON THE PLANS OR AS DIRECTED BY THE DISTRICT.
10. OUTLETS SHALL BE CAPPED WITH DISTRICT APPROVED PLASTIC CAPS.

LOS ANGELES COUNTY WATERWORKS DISTRICTS

DEPARTMENT OF PUBLIC WORKS

STANDARD PLAN

W-8

APPROVED _____ ASSISTANT DEPUTY DIRECTOR

JULY 2009 DATE

SHEET 1 OF 1

ADJUSTABLE VALVE BOX AND VALVE NUT EXTENSION

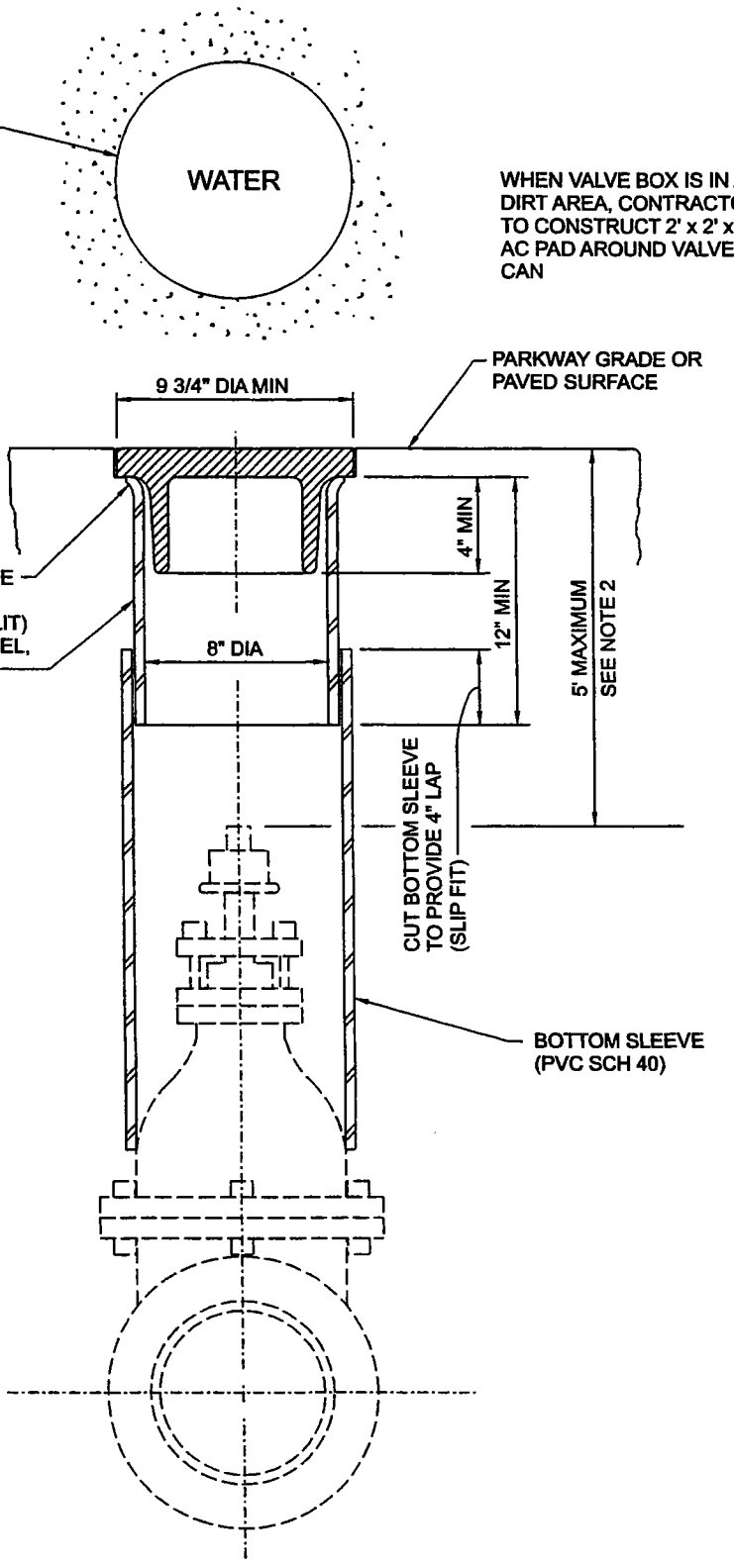

PAINT SCHEDULE

BLUE: H.B. FULLER APPLIED BY THE FUSION POWDERED EPOXY METHOD BY FUSECOTE CO., INC. OR DISTRICT APPROVED EQUAL

GENERAL NOTES:

1. A REDWOOD 2" x 4" PAINTED RED IS TO BE PLACED IN VALVE BOX FOR ALL NORMALLY CLOSED VALVES. LENGTH TO BE DETERMINED BY DEPTH OF GATE VALVE.
2. VALVE NUT EXTENSIONS WILL BE REQUIRED WHERE THE DISTANCE FROM FINISHED GRADE TO THE VALVE NUT EXCEEDS FIVE (5) FEET.

NTS

LOS ANGELES COUNTY WATERWORKS DISTRICTS

DEPARTMENT OF PUBLIC WORKS

STANDARD PLAN
W-15
SHEET 1 OF 2

APPROVED

ASSISTANT DEPUTY DIRECTOR

APRIL 2004
DATE

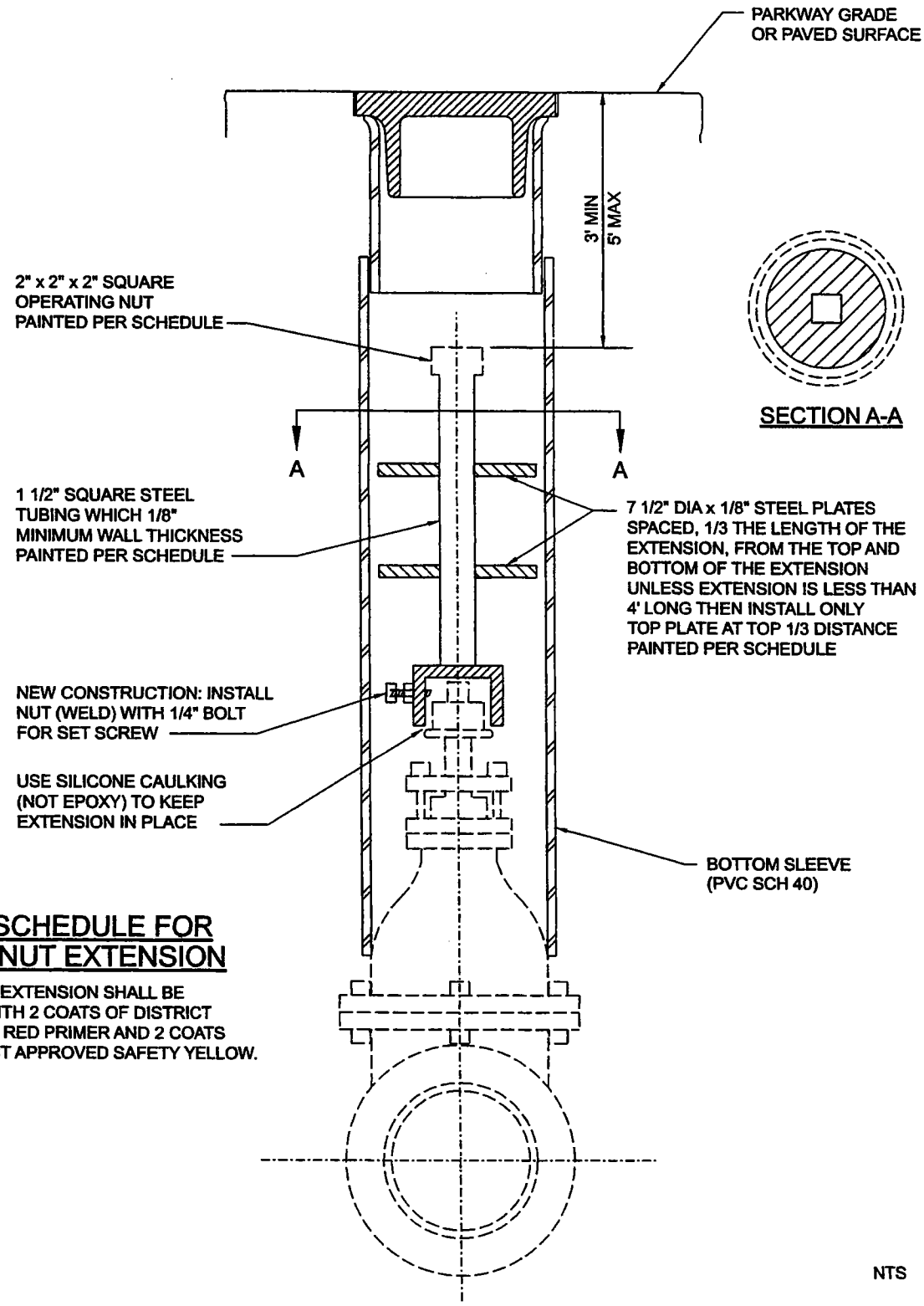

PAINT SCHEDULE FOR VALVE NUT EXTENSION

VALVE NUT EXTENSION SHALL BE PAINTED WITH 2 COATS OF DISTRICT APPROVED RED PRIMER AND 2 COATS OF DISTRICT APPROVED SAFETY YELLOW.

NTS

LOS ANGELES COUNTY WATERWORKS DISTRICTS

DEPARTMENT OF PUBLIC WORKS

APPROVED _____ ASSISTANT DEPUTY DIRECTOR

APRIL 2004 DATE

STANDARD PLAN

W-15

SHEET 2 OF 2

AIR-RELEASE AND VACUUM VALVE ASSEMBLY

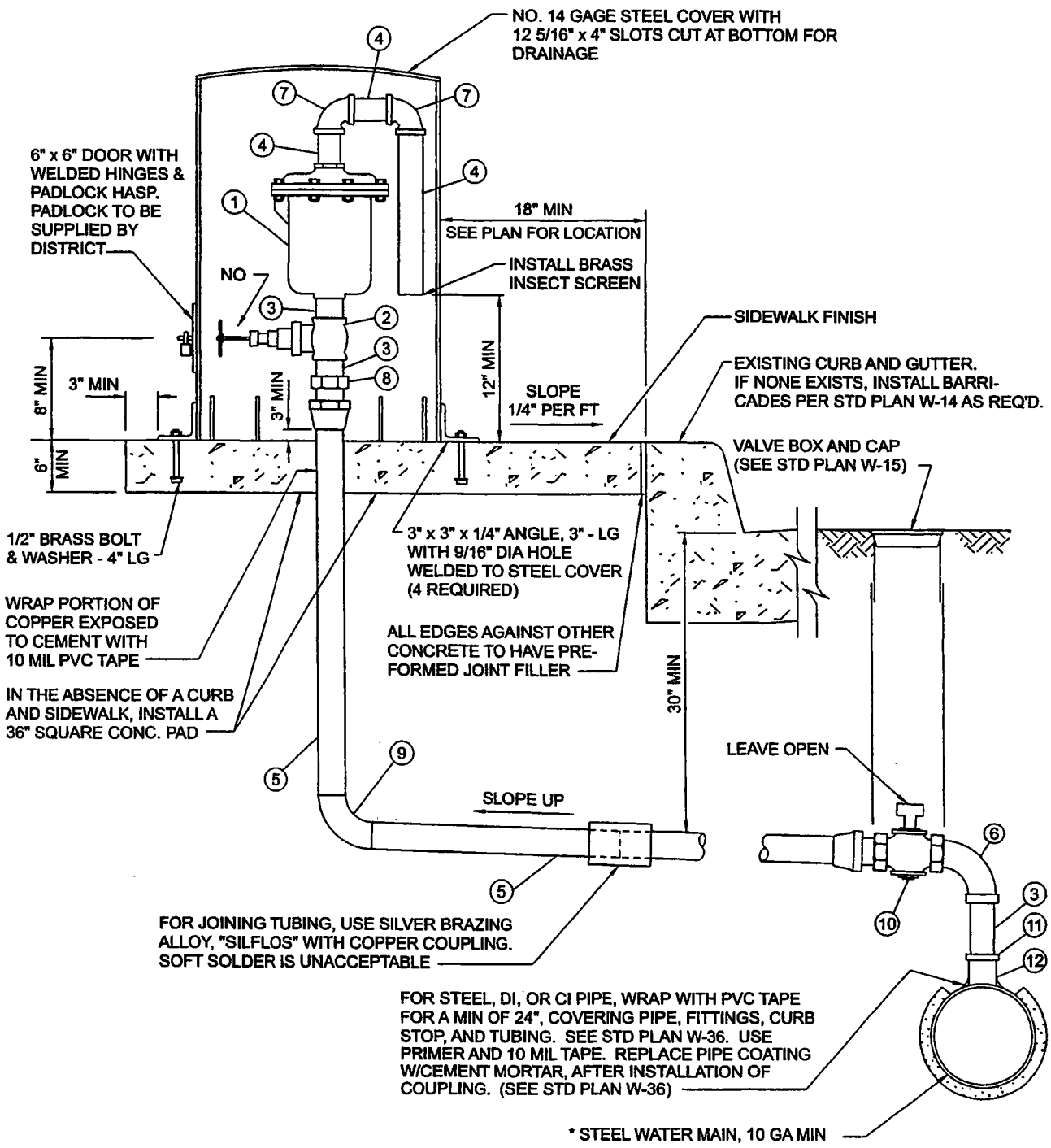

* FOR CONNECTION TO ACP, DI, CI, OR STEEL (LESS THAN 10 GA) PIPE, SEE STD PLAN W-5, NOTE 3 FOR DOUBLE-STRAP CLAMP TO BE USED FOR ITEM 12. CLAMP OUTLET SHALL BE SET VERTICALLY FACING UPWARD.

NTS

LOS ANGELES COUNTY WATERWORKS DISTRICTS

DEPARTMENT OF PUBLIC WORKS

APPROVED _____ APRIL 2004
ASSISTANT DEPUTY DIRECTOR DATE

STANDARD PLAN
W-16
SHEET 1 OF 2

GENERAL NOTES:

1. THE HEIGHT AND DIAMETER OF THE STEEL COVER SHALL PROVIDE A 2" MINIMUM CLEARANCE AROUND THE VALVE ASSEMBLY.
2. IN AREAS SUBJECT TO FREEZING, ALL VALVES AND PIPING ABOVE GROUND SHALL BE INSULATED.
3. PAINT VALVE ASSEMBLY ABOVE GROUND, AND STEEL COVER, WITH TWO COATS OF DISTRICT APPROVED RED PRIMER AND TWO COATS OF DISTRICT APPROVED FOREST GREEN OR DUNES TAN.
4. USE PROPER CLASS FITTINGS FOR WORKING WATER PRESSURE. (CLASS 150 MIN).
5. IF BRONZE NIPPLE (ITEM NO. 3) IS OVER 12" LONG, ADD CORPORATION STOP NEXT TO MAIN. (LEAVE OPEN).
6. SEE PLANS FOR VALVE SIZES AND USE SAME SIZE FITTINGS, AND NIPPLE LENGTHS TO SUIT. (NO CLOSE NIPPLES).

LIST OF MATERIALS

NO.	DESCRIPTION (FOR 2" VALVES)	ENGINEER'S EST. QUANTITY
(1)	2" AIR-RELEASE AND VACUUM VALVE	1
(2)	2" BALL VALVE, SCREWED, BRONZE	1
(3)	2" BRONZE NIPPLE, SHORT	1' ±
(4)	2" STD STEEL PIPE, NIPPLE, GALV	2' ±
(5)	2" COPPER TUBING, TYPE "K" SOFT	24' ±
(6)	2" 90° STREET ELBOW, SCREWED, BRONZE	1
(7)	2" 90° ELBOW, SCREWED, GALV	2
(8)	2" ADAPTER, BRONZE, COPPER FLARED x IP, MALE	1
(9)	2" 90° ELBOW, COPPER	1
(10)	2" CURB STOP, BRONZE, COPPER FLARED x IP, FEMALE, "HAYS" 5050 OR APPROVED EQUAL	1
(11)	2 1/2" x 2" INSULATING BUSHING	1
(12)	2 1/2" WELDED COUPLING	1

CONCRETE THRUST BLOCKS

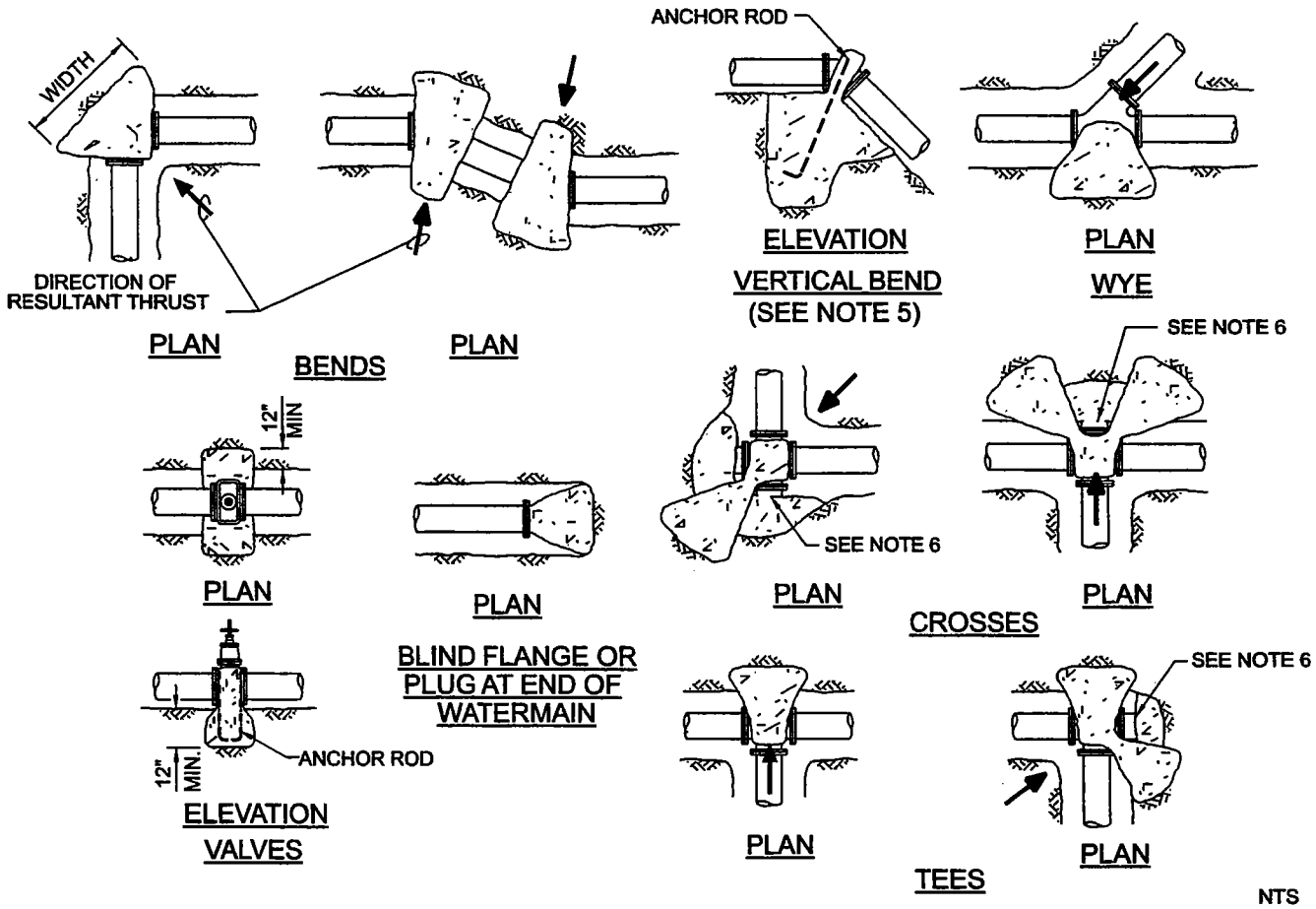

NTS

TABLE I

MINIMUM BEARING AREAS IN SQ FT *				
MAIN SIZE	TEE **	90° BEND	45° BEND	22 1/2° BEND
6"	4	4	4	3
8"	5	7	4	3
10"	9	12	6	4
12"	12	16	9	6

* BASED ON 150 PSI WWP PRESSURE & SOIL BEARING LOADS OF 2000 PSF. THE RATIO OF WIDTH TO HEIGHT SHALL NOT EXCEED 1 1/2 TO 1.

** TEES, PLUGS, CAPS, AND HYDRANTS.

TABLE II

*** SOIL TYPE	**** MAX ALLOWABLE SOIL BEARING VALUES	FACTORS FOR INCREASING AREAS IN TABLE 1
LOOSE SAND	500 PSF	4
SOFT SANDY CLAY	1000 PSF	2
ADOBE	1000 PSF	2
COMPACT FINE SAND	2000 PSF	1
COMPACT COARSE SAND	2000 PSF	1
MEDIUM STIFF CLAY	2000 PSF	1

*** THE CONTRACTOR SHALL BE RESPONSIBLE FOR DETERMINING THE SAFE SOIL BEARING VALUES AND THE POSITION AND SIZE OF BEARING AREAS.

**** BASED ON 2 FEET MINIMUM DEPTH OF COVER OVER THE PIPE.

GENERAL NOTES:

1. ALL ANCHOR AND THRUST BLOCKS SHALL BEAR AGAINST UNDISTURBED SOIL.
2. MINIMUM ALLOWABLE WATER PRESSURE FOR DESIGN OF THRUST BLOCKS IS 150 PSI. BEARING AREA INCREASES DIRECTLY WITH INCREASE IN PRESSURE.
3. ALL CONCRETE USED IN THRUST BLOCKS SHALL ATTAIN 2000 PSI STRENGTH.
4. ALL ANCHOR RODS SHALL BE REINFORCING STEEL AND A MINIMUM OF 1/2 INCH IN DIAMETER.
5. USE ANCHOR BLOCKS AT VERTICAL BENDS WHEN PIPE IS ABOVE OR BELOW GROUND. SIZE OF BLOCK AND ROD SHALL BE AS SHOWN ON THE PLANS OR AS DETERMINED BY THE DISTRICT.
6. USE 30 POUND FELT TO INSURE COLD JOINT.
7. CONCRETE SHALL NOT COME INTO DIRECT CONTACT WITH ASBESTOS-CEMENT PIPE.
8. FOR PIPE GREATER THAN 12" IN DIAMETER, ENGINEER IS TO SUBMIT CALCULATIONS FOR APPROVAL.

LOS ANGELES COUNTY WATERWORKS DISTRICTS

DEPARTMENT OF PUBLIC WORKS

APPROVED _____ APRIL 2004
ASSISTANT DEPUTY DIRECTOR DATE

STANDARD PLAN
W-21
SHEET 1 OF 1

CUTTING AND PLUGGING WATER MAINS

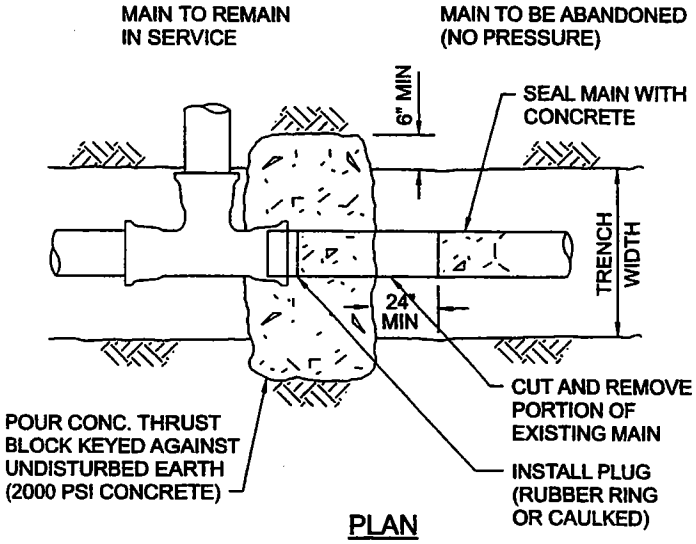

PLAN

EXISTING HUB END FITTING OR VALVE

NTS

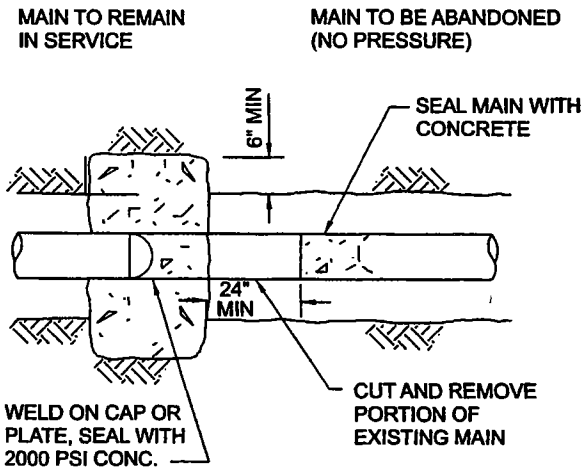

PLAN

EXISTING STEEL MAIN

NTS

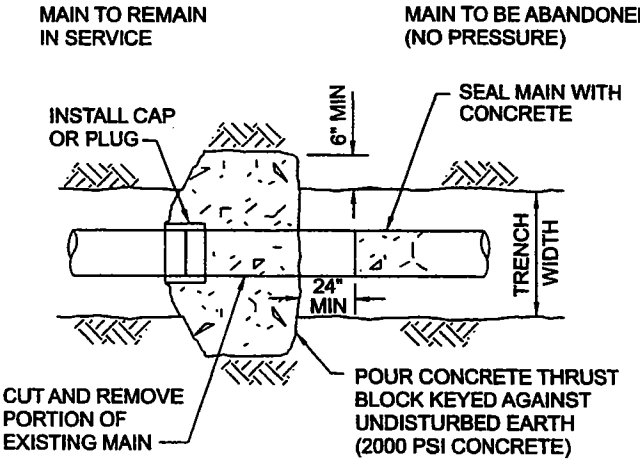

* NO CONCRETE TO BE PLACED ON ACP OR CIP

PLAN

EXISTING ASBESTOS-CEMENT OR CAST-IRON MAIN

NTS

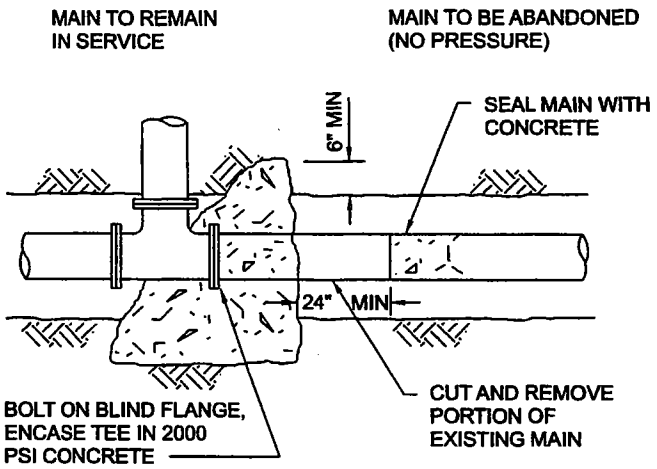

PLAN

EXISTING FLANGED FITTING OR VALVE

NTS

GENERAL NOTE: SEE SPECIFICATIONS FOR FLUSHOUT REQUIREMENTS.

LOS ANGELES COUNTY WATERWORKS DISTRICTS

DEPARTMENT OF PUBLIC WORKS

STANDARD PLAN

W-22

APPROVED

ASSISTANT DEPUTY DIRECTOR

APRIL 2004

DATE

SHEET 1 OF 1

PIPE TRENCH

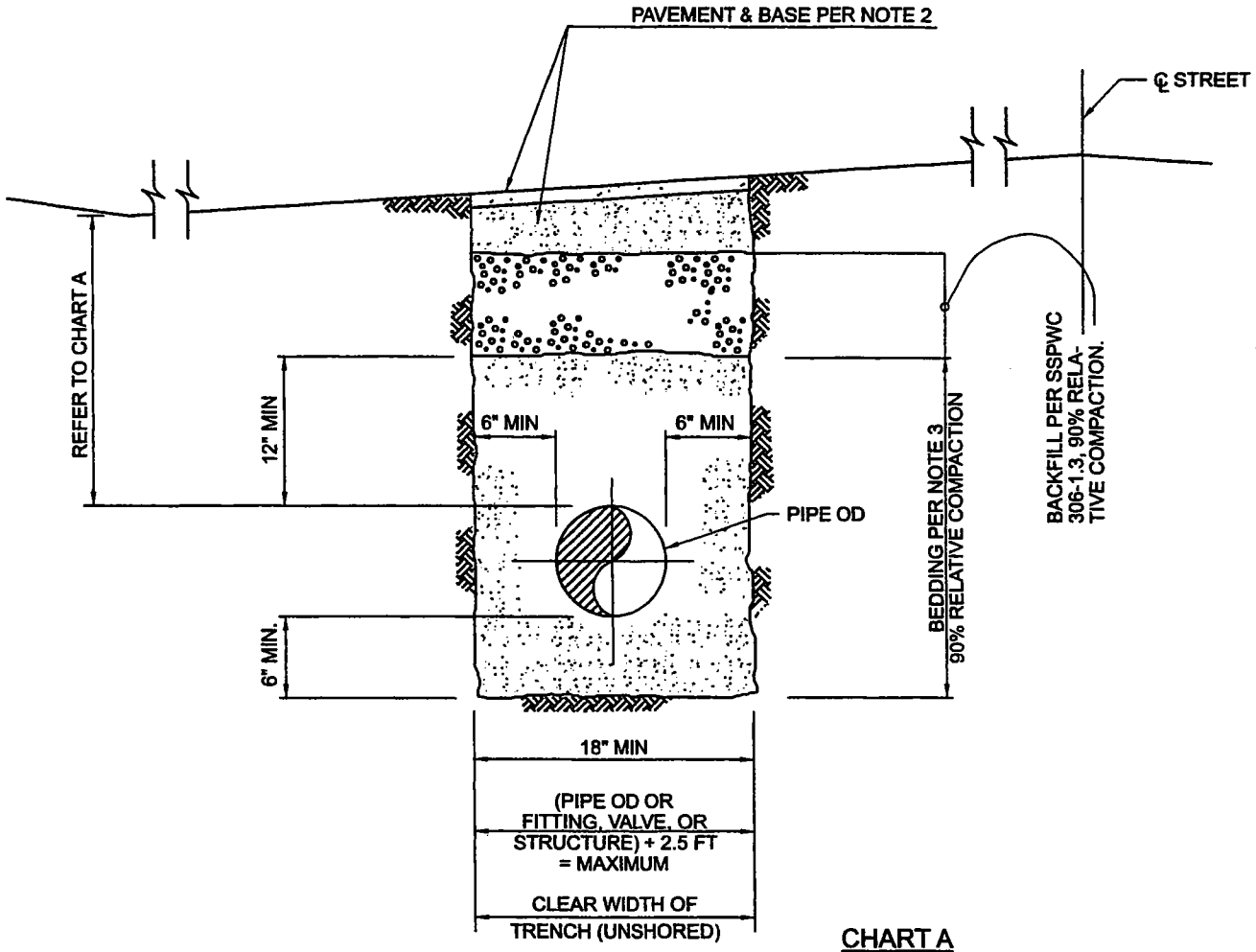

CHART A

SIZE OF PIPE (INCHES)	MIN DEPTH OF COVER OVER PIPE IN INCHES (SEE NOTE 1).	MIN DEPTH OF COVER OVER PIPE IN PRIVATE STREET (SEE NOTE 1).
4 TO 6	36	36
8 TO 10	42	48
12 OR LARGER	48	48

GENERAL NOTES:

1. THE DEPTH OF COVER OVER THE PIPE SHALL BE MEASURED VERTICALLY FROM THE TOP OF THE PIPE WITH REFERENCE TO AN APPROVED, IMPROVED GUTTER FLOWLINE. WHERE THERE IS NO IMPROVED GUTTER FLOWLINE, USE THE ELEVATION OF A PROPOSED ADJACENT FLOWLINE AS THE REFERENCE ELEVATION.
2. PAVEMENT SHALL BE PER THE REQUIREMENTS OF THE LOCAL AGENCY'S PERMIT BUT NOT LESS THAN THE REQUIREMENTS OF STANDARD PLAN 132-1 FOR PCC PAVEMENT OR STANDARD PLAN 133-1 FOR AC PAVEMENT.
3. BEDDING SHALL BE SAND PER SSPWC 306-1.2.1 UNLESS OTHERWISE APPROVED BY THE DISTRICT.
4. NEITHER BEDDING NOR BACKFILL SHALL CONTAIN PARTICLES GREATER THAN ONE SQUARE INCH.

NTS

LOS ANGELES COUNTY WATERWORKS DISTRICTS

DEPARTMENT OF PUBLIC WORKS

APPROVED _____ APRIL 2004
ASSISTANT DEPUTY DIRECTOR DATE

STANDARD PLAN
W-46
SHEET 1 OF 1

DESIGN REQUIREMENTS FOR WATER MAINS IN THE VICINITY OF SANITARY SEWERS

PARALLEL CONSTRUCTION

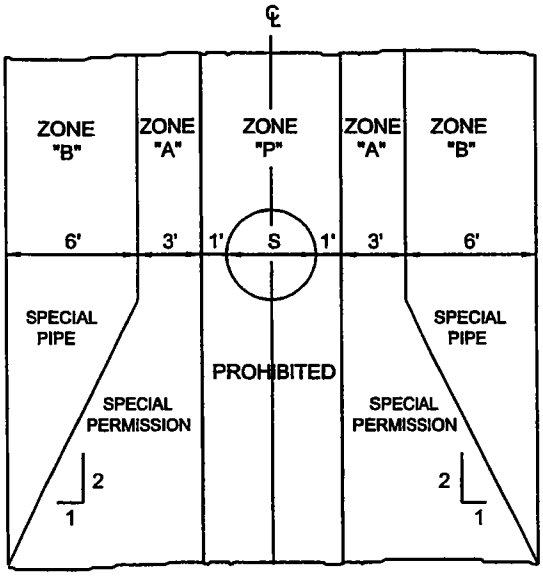

SPECIAL CONSTRUCTION WILL BE REQUIRED IF HORIZONTAL CLEARANCE BETWEEN PRESSURE WATER MAIN AND SEWER LINE IS LESS THAN 10 FEET. SEE THE ZONE ABOVE CORRESPONDING TO CONSTRUCTION REQUIREMENTS BELOW.

PERPENDICULAR CONSTRUCTION

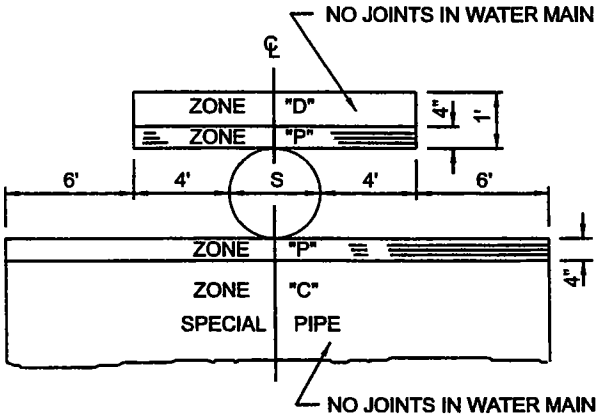

SPECIAL CONSTRUCTION WILL BE REQUIRED IF VERTICAL CLEARANCE BETWEEN PRESSURE WATER MAIN AND SEWER LINE, AT CROSSING, IS LESS THAN ONE FOOT. SEE THE ZONE ABOVE CORRESPONDING TO CONSTRUCTION REQUIREMENTS BELOW.

ZONE	WATER MAIN CONSTRUCTION REQUIREMENTS
A	NO WATER MAINS PARALLEL TO SEWERS SHALL BE CONSTRUCTED WITHOUT APPROVAL FROM THE HEALTH AGENCY.
B	USE STEEL PIPE, CML AND CMC WITH WELDED JOINTS.
C	NO JOINTS WITHIN 10 FEET OF EITHER SIDE OF SEWER LINE. USE DUCTILE IRON PIPE, CML AND POLYETHYLENE WRAPPED, OR STEEL PIPE, CML AND CMC.
D	NO JOINTS WITHIN 4 FEET OF EITHER SIDE OF SEWER LINE. USE DUCTILE IRON PIPE, CML AND POLYETHYLENE WRAPPED, OR STEEL PIPE, CML AND CMC.
P	PROHIBITED ZONE - NO WATER MAINS ARE ALLOWED TO BE INSTALLED WITHIN THIS ZONE.

ADDITIONAL NOTES:

1) WATER MAINS AND SEWER LINES MUST NOT BE INSTALLED IN THE SAME TRENCH.

2) SEPARATION DISTANCES SPECIFIED SHALL BE MEASURED FROM THE NEAREST EDGE OF FACILITIES.

3) STEEL PIPE SHALL BE A MINIMUM OF 10 GAGE THICKNESS.

THE "CALIFORNIA WATERWORKS STANDARDS" SETS FORTH THE MINIMUM SEPARATION REQUIREMENTS FOR WATER MAINS AND SEWER LINES. THESE STANDARDS ARE CONTAINED IN SECTION 64630, TITLE 22, CALIFORNIA ADMINISTRATIVE CODE.

LOS ANGELES COUNTY WATERWORKS DISTRICTS

DEPARTMENT OF PUBLIC WORKS

APPROVED

ASSISTANT DEPUTY DIRECTOR

APRIL 2004
DATE

STANDARD PLAN
W-50
SHEET 1 OF 1

APPENDIX IV

FY 19-20 STREET IMPROVEMENT PROJECT
PROJECT SPECIFICATION NO. 2020-01 (002001)
IN THE CITY OF SOUTH PASADENA, CALIFORNIA

Standard Plans for Public Works Construction (SPPWC) Standards

Approved for use on June 7, 2023
294856.v3

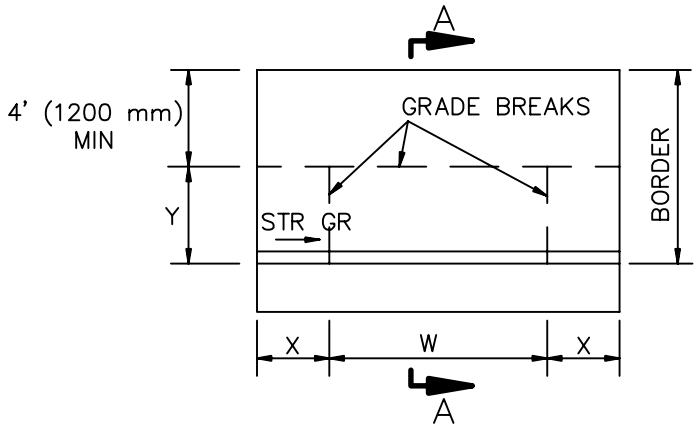

TYPE A

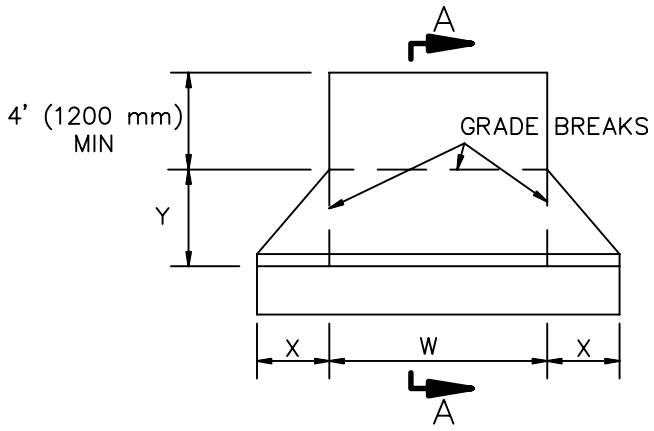

TYPE B

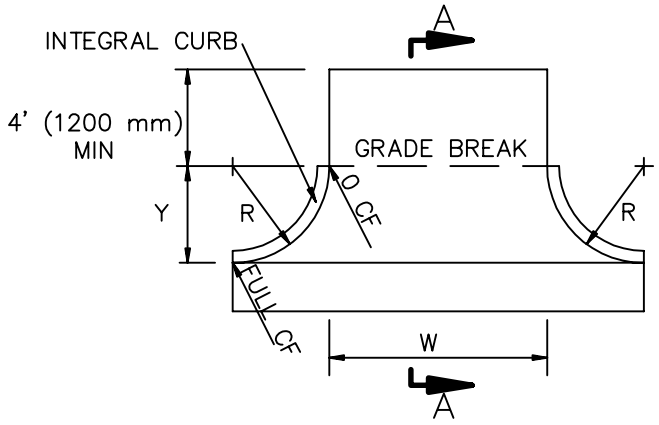

TYPE C

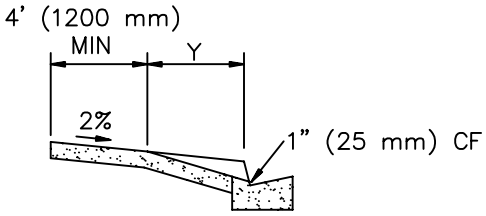

SECTION A–A

CURB FACE, inches (mm)	X, inches (mm)	Y, inches (mm)
6" (150) or less	3'–0" (900)	4'–0" (1200)
7" (175)	3'–6" (1050)	4'–9" (1425)
8" (200)	4'–0" (1200)	5'–8" (1700)
9" (225)	4'–6" (1350)	6'–6" (1950)
10" (250)	5'–0" (1500)	7'–3" (2175)
11" (275)	5'–6" (1650)	8'–0" (2400)
12" (300) or more	6'–0" (1800)	8'–9" (2625)

NOTES:

1. RESIDENTIAL DRIVEWAYS SHALL BE 4" (100 mm) THICK PCC.
2. COMMERCIAL DRIVEWAYS SHALL BE 6" (150 mm) THICK PCC.
3. WEAKENED PLANE JOINTS SHALL BE INSTALLED AT BOTH SIDES OF A DRIVEWAY AND AT 10' (3.0 m) INTERVALS.
4. CURB FOR TYPE C DRIVEWAY SHALL BE INTEGRAL AND MATCH ADJACENT CONSTRUCTION.
5. REFER TO LOCAL DEVELOPMENT REGULATIONS FOR AMERICANS WITH DISABILITIES ACCESS REQUIREMENTS AND MAXIMUM PERMITTED DRIVEWAY WIDTHS.

STANDARD PLANS FOR PUBLIC WORKS CONSTRUCTION

PROMULGATED BY THE PUBLIC WORKS STANDARDS INC. GREENBOOK COMMITTEE 1984 REV. 1996, 2009

DRIVEWAY APPROACHES

USE WITH STANDARD SPECIFICATIONS FOR PUBLIC WORKS CONSTRUCTION

STANDARD PLAN 110–2

SHEET 1 OF 1

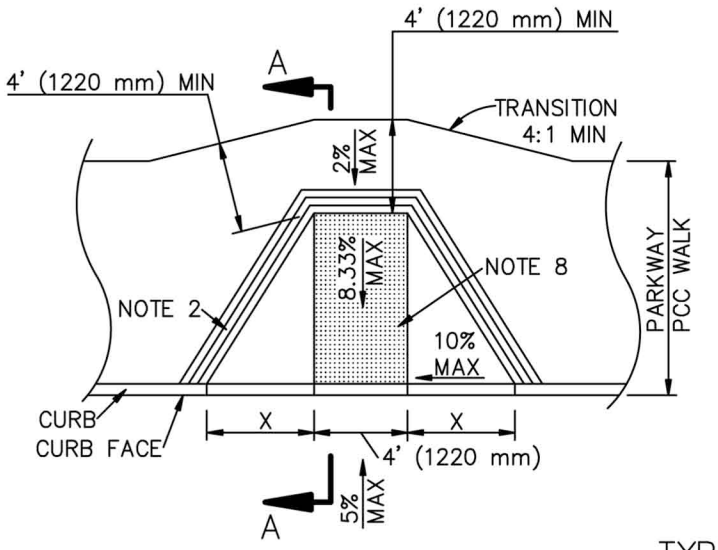

TYPE 1

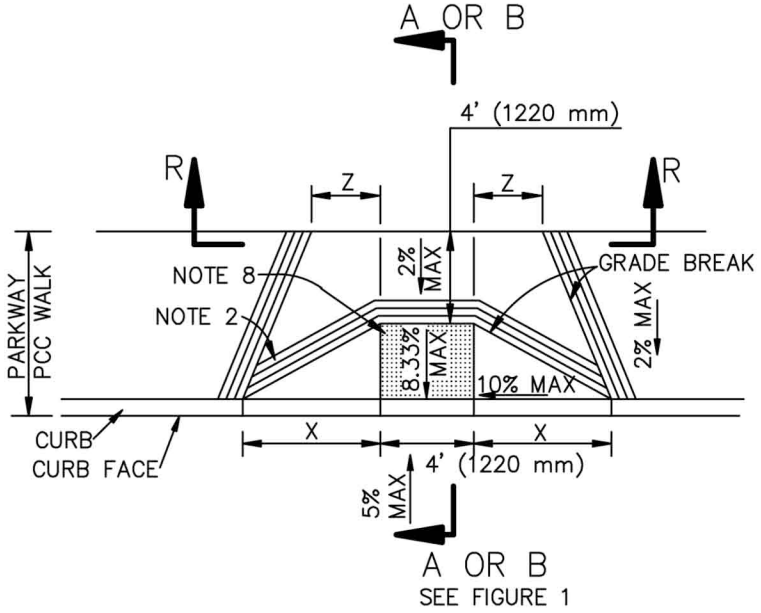

TYPE 2

CASE A

PARTS OF THIS STANDARD PLAN SHOW INSTALLATION FOR TYPICAL RETROFIT CONDITIONS, AND ARE NOT FULLY COMPLIANT WITH CALIFORNIA BUILDING CODE REQUIREMENTS FOR NEW DEVELOPMENT.

STANDARD PLANS FOR PUBLIC WORKS CONSTRUCTION		
PROMULGATED BY THE PUBLIC WORKS STANDARDS INC. GREENBOOK COMMITTEE 1992 REV. 1996, 2000, 2005, 2009, 2013	**CURB RAMP**	STANDARD PLAN **111–5**
	USE WITH STANDARD SPECIFICATIONS FOR PUBLIC WORKS CONSTRUCTION	SHEET 1 OF 10

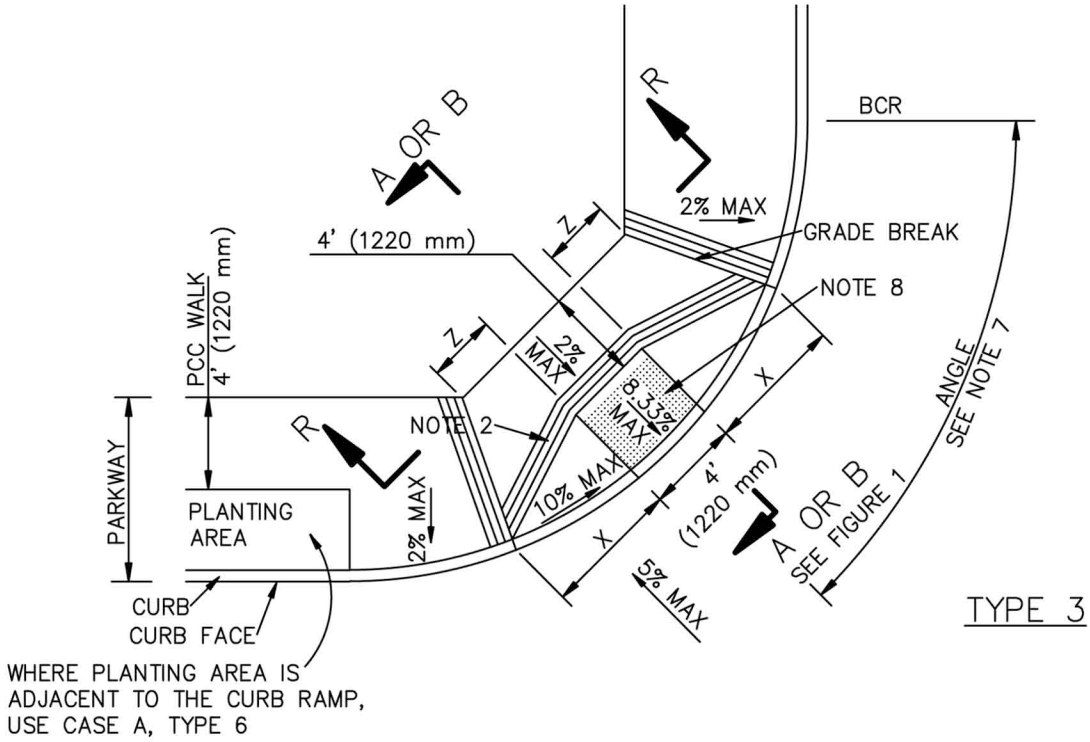

TYPE 3

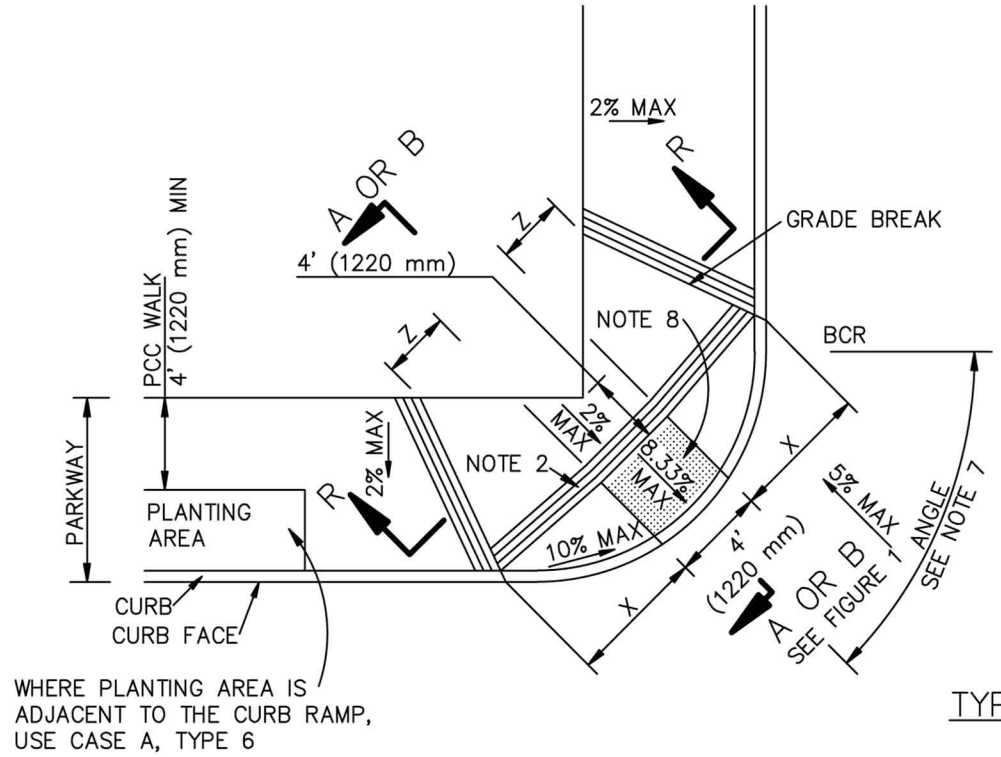

TYPE 4

CASE A

STANDARD PLANS FOR PUBLIC WORKS CONSTRUCTION	STANDARD PLAN
CURB RAMP	111–5
	SHEET 2 OF 10

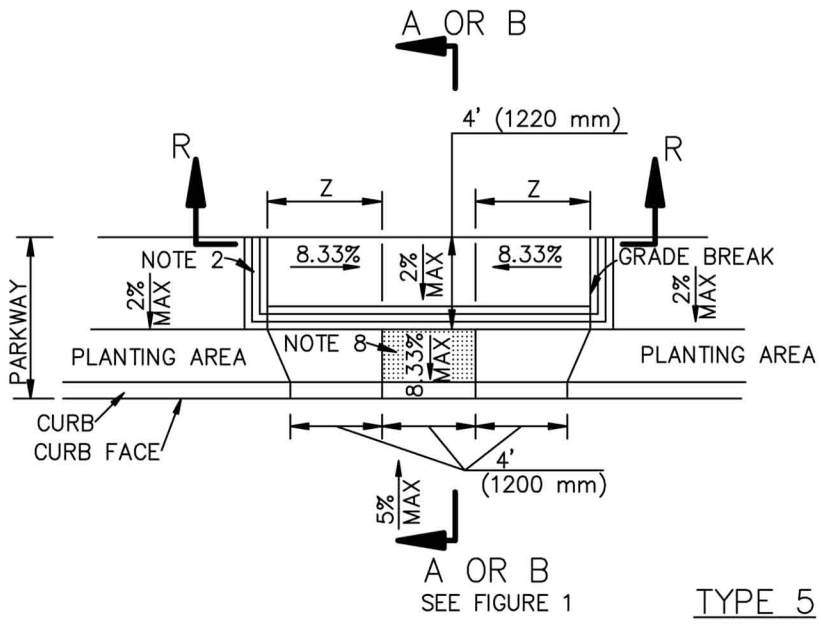

TYPE 5

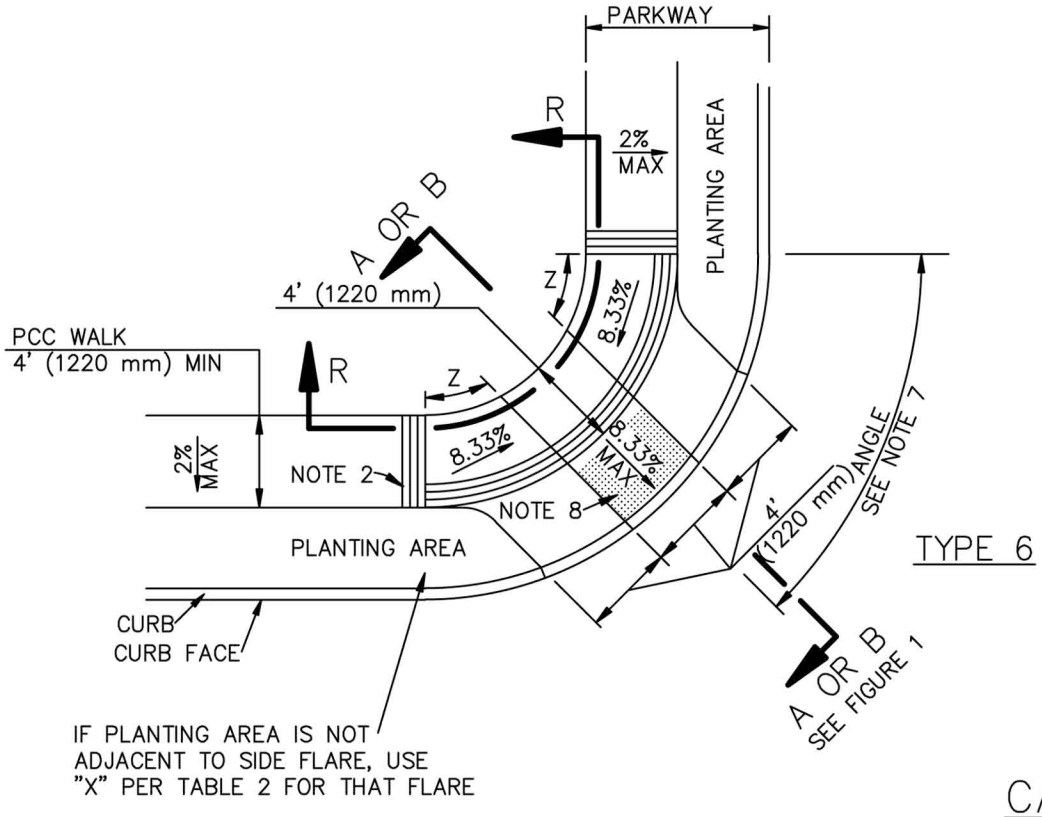

TYPE 6

CASE A

STANDARD PLANS FOR PUBLIC WORKS CONSTRUCTION	STANDARD PLAN
CURB RAMP	**111–5**
	SHEET 3 OF 10

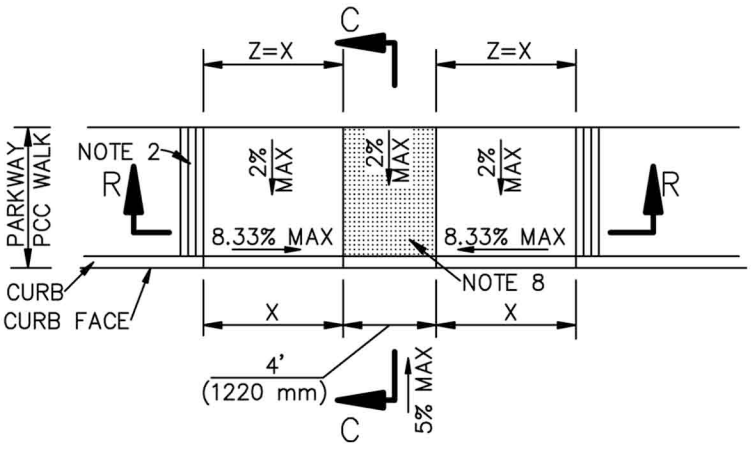

TYPE 1

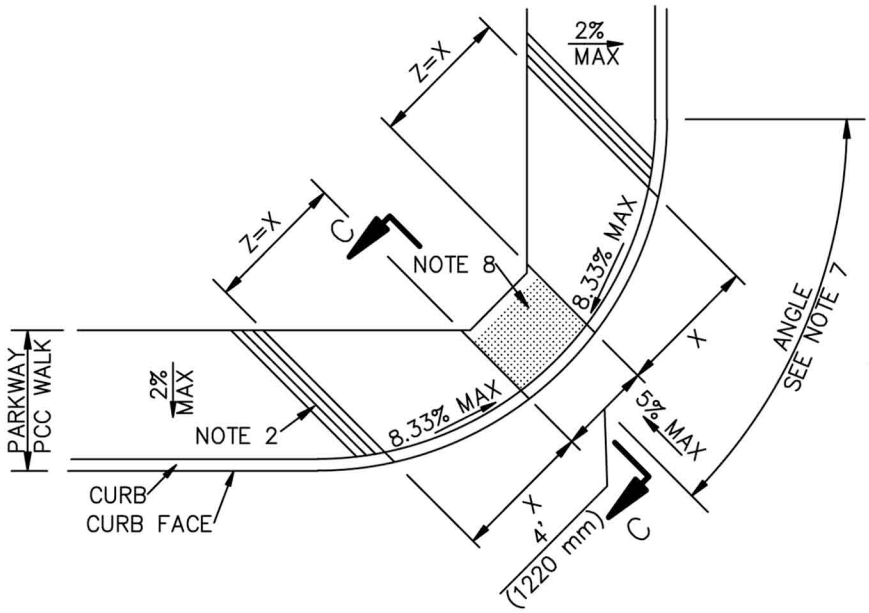

TYPE 2

CASE B

STANDARD PLANS FOR PUBLIC WORKS CONSTRUCTION	STANDARD PLAN
CURB RAMP	**111–5**
	SHEET 4 OF 10

SKEW ANGLE a=45°
OFFSET b=0
UNLESS OTHERWISE
NOTED ON PLANS

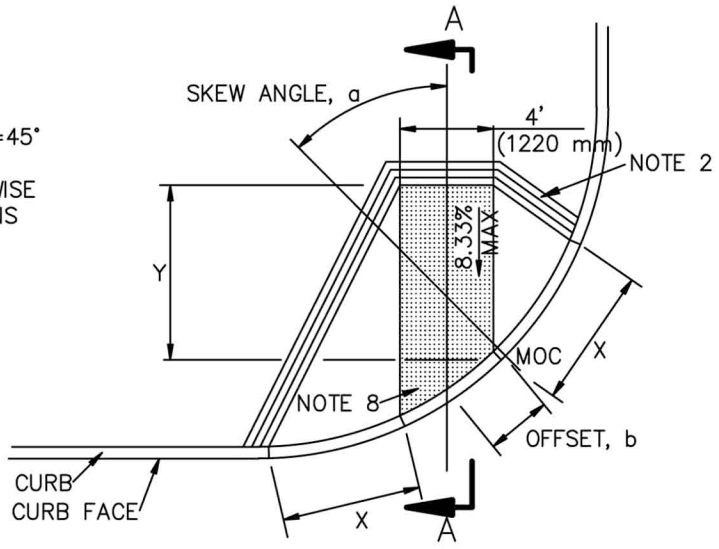

CASE C

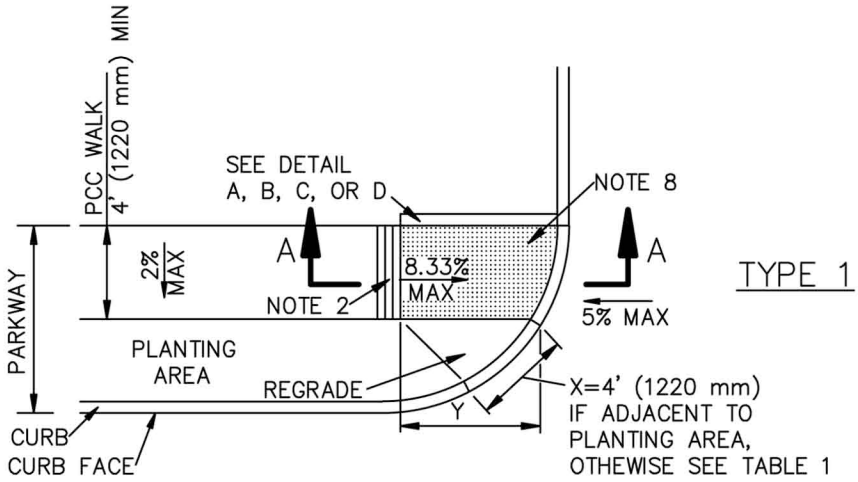

TYPE 1

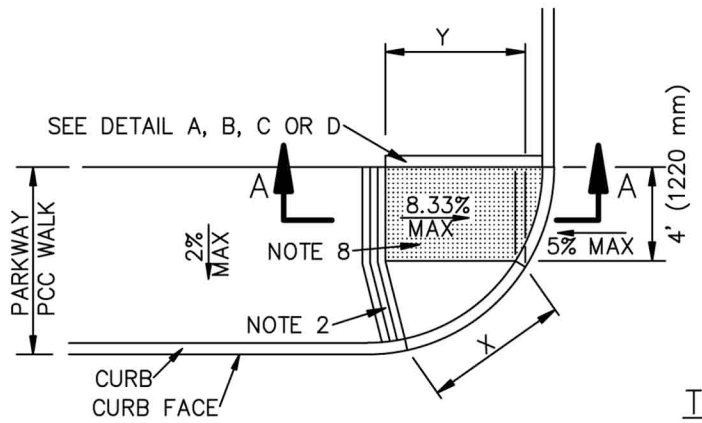

TYPE 2

CASE D

STANDARD PLANS FOR PUBLIC WORKS CONSTRUCTION	STANDARD PLAN
CURB RAMP	**111–5**
	SHEET 5 OF 10

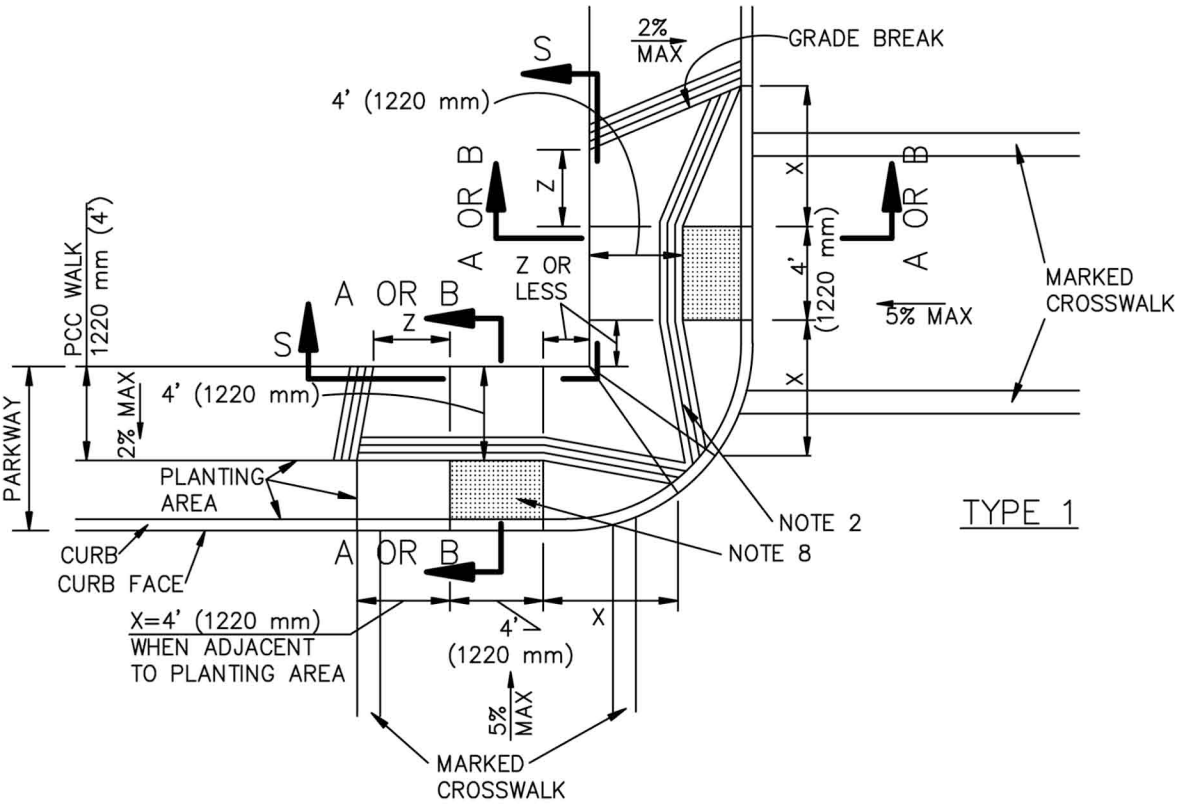

TYPE 1

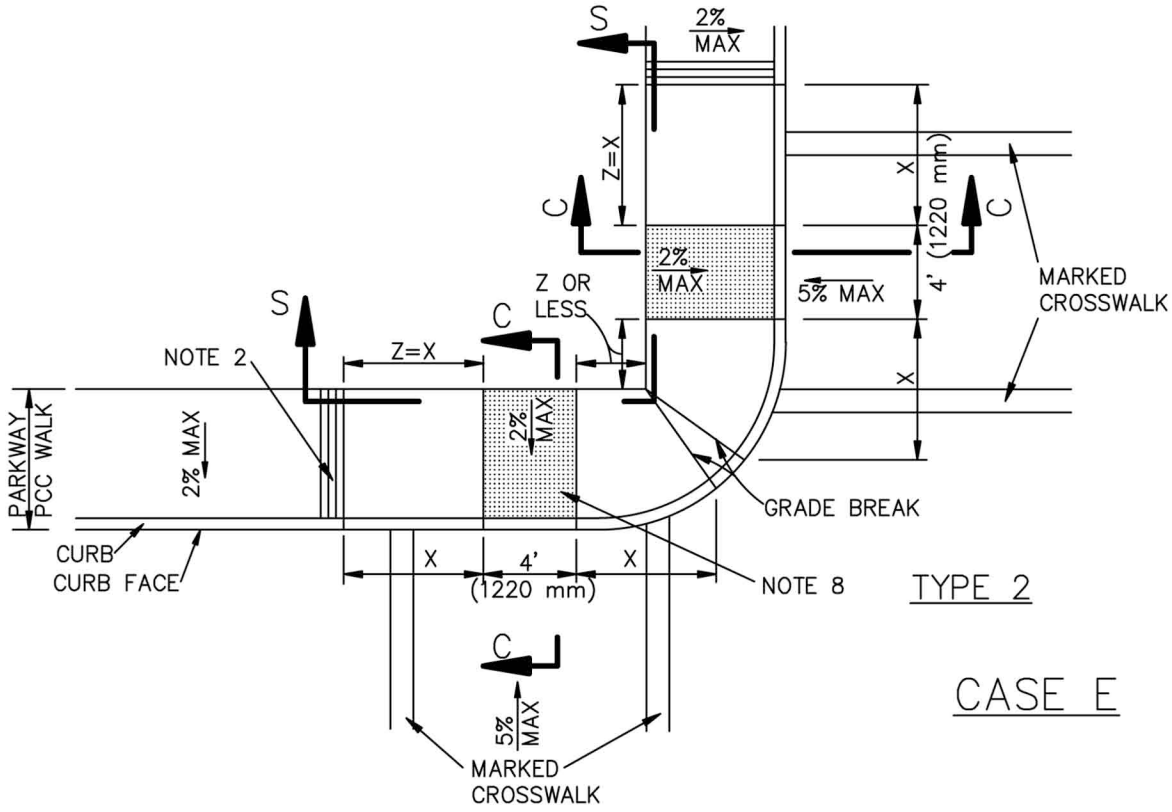

TYPE 2

CASE E

STANDARD PLANS FOR PUBLIC WORKS CONSTRUCTION	STANDARD PLAN 111–5
CURB RAMP	SHEET 6 OF 10

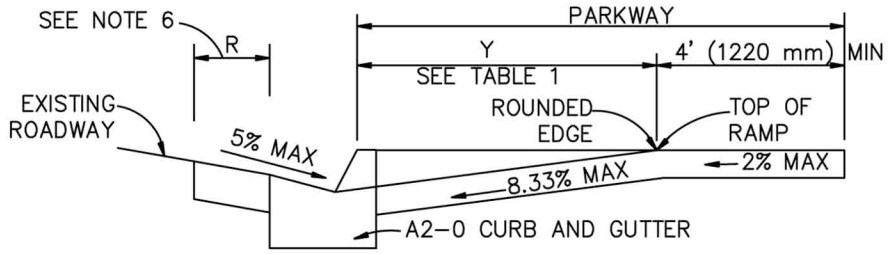

SECTION A–A

USE FIGURE 1 TO DETERMINE WHICH OF SECTIONS A–A, B–B OR C–C IS APPROPRIATE.

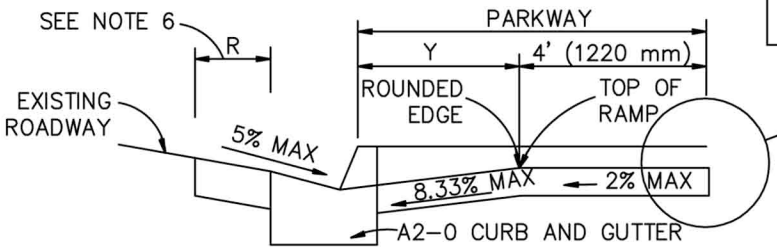

SECTION B–B

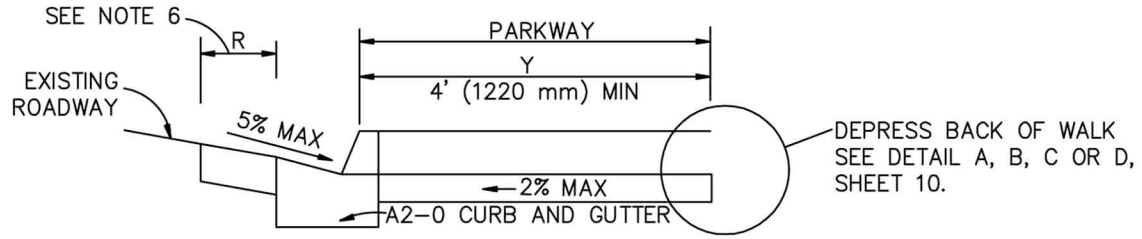

SECTION C–C

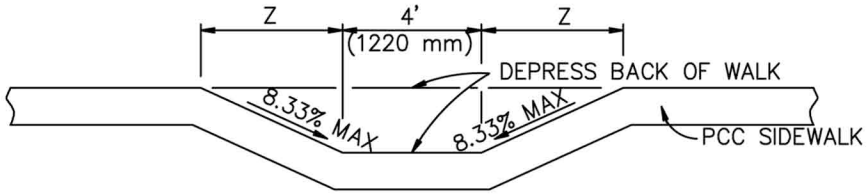

SECTION R–R

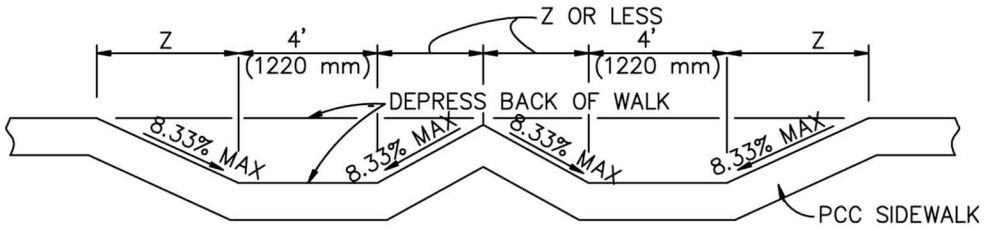

SECTION S–S

STANDARD PLANS FOR PUBLIC WORKS CONSTRUCTION	STANDARD PLAN 111–5
CURB RAMP	SHEET 7 OF 10

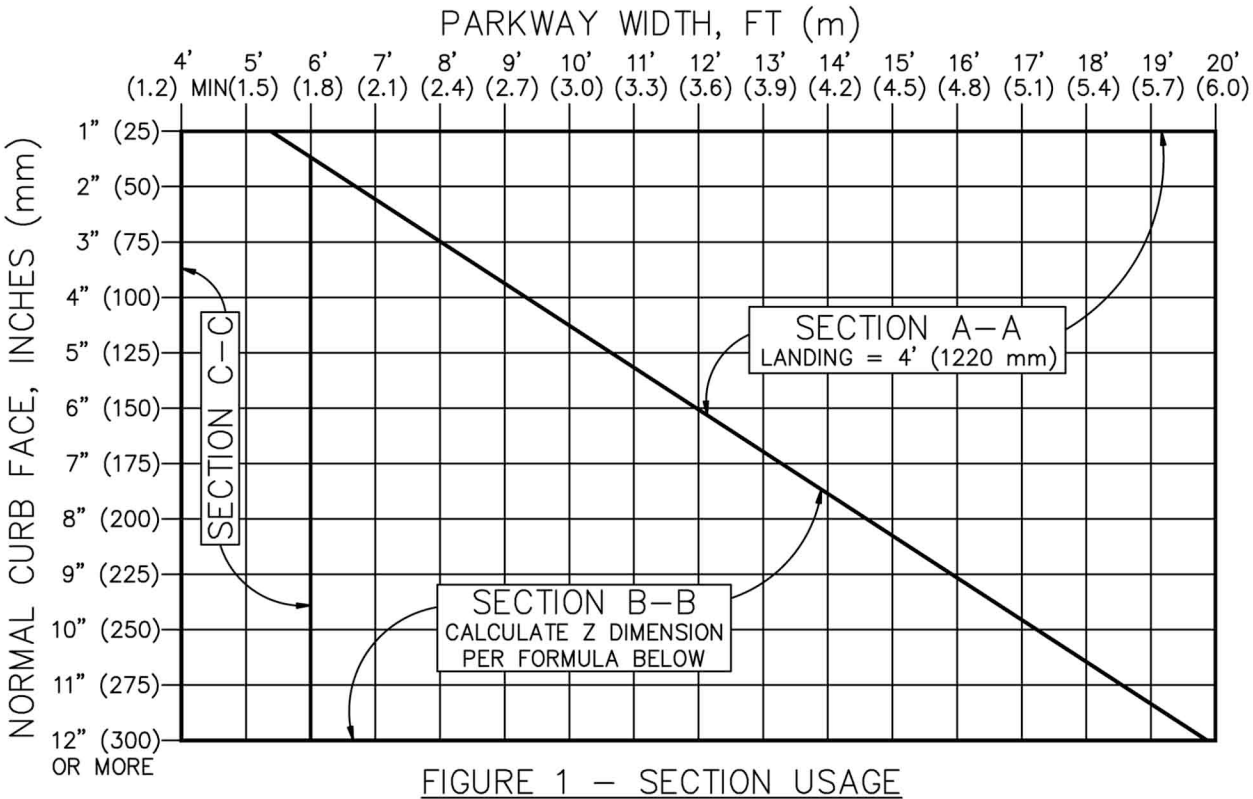

FIGURE 1 – SECTION USAGE

NORMAL CURB FACE, INCHES (mm)	X, FT (mm)	SECTION Y–Y Y, FT (mm)
2" (50)	4.00' (1220) MIN	2.63' (790)
3" (75)	4.00' (1220) MIN	3.95' (1185)
4" (100)	4.00' (1220) MIN	5.26' (1580)
5" (125)	4.17' (1275)	6.58' (1975)
6" (150)	5.00' (1525)	7.90' (2370)
7" (175)	5.83' (1775)	9.21' (2765)
8" (200)	6.67' (2035)	10.53' (3160)
9" (225)	7.50' (2285)	11.84' (3555)
10" (250)	8.33' (2540)	13.16' (3950)
11" (275)	9.17' (2795)	14.47' (4340)
12" (300)	10.00' (3050)	15.79' (4735)

SEE SHEET 9 FOR STREET SLOPE ADJUSTMENT FACTORS, ALL STREETS

TABLE 1 – X AND Y VALUES

TABLE 1 REFERENCE FORMULAS:
X = CF / 8.333%
Y = CF / (8.333% – 2% WALK CROSS SLOPE)

WHERE FIGURE 1 SHOWS USE OF SECTION B–B, FIGURE Z DIMENSION AS FOLLOWS:

W = PARKWAY WIDTH
L = LANDING WIDTH, 4' (1220 mm) TYP
Z = [(Y+L)–W] x 0.760

IF (Y+L) < W, THEN Z = 0

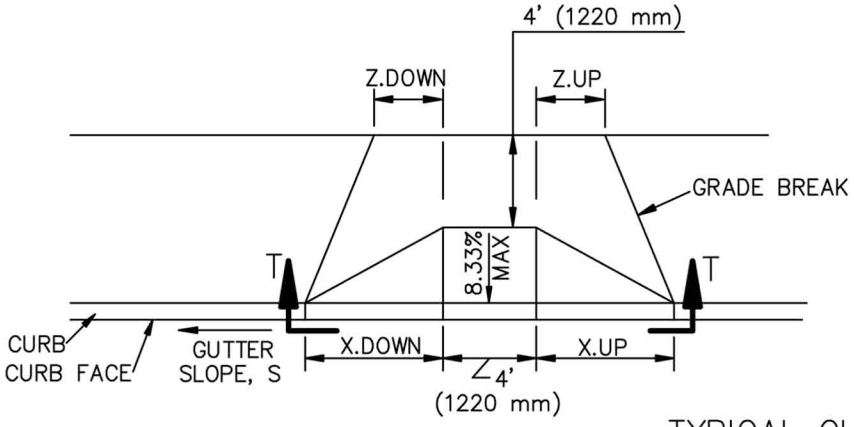

TYPICAL CURB RAMP

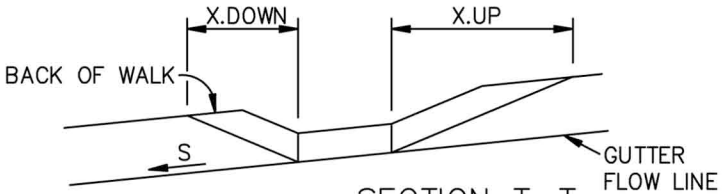

SECTION T–T
SLOPED STREET

FOR SLOPED STREETS, MULTIPLY THE DIMENSIONS PARALLEL TO THE STREET, X AND Z, UPSTREAM AND DOWNSTREAM OF THE RAMP, BY THE FACTORS IN THE FOLLOWING TABLE.

FOR EXAMPLE, X.DOWN = X x K.DOWN

S	K.DOWN	K.UP
0%	1.000	1.000
0.2%	0.977	1.025
0.5%	0.943	1.064
1%	0.893	1.136
2%	0.806	1.316
3%	0.735	1.563
4%	0.676	1.923
5%	0.625	2.500

TABLE 2 – SLOPE ADJUSTMENTS

TABLE 2 REFERENCE FORMULAS:
K.DOWN = 8.333% / (8.333% + S)
K.UP = 8.333% / (8.333% – S)

STREET SLOPE ADJUSTMENTS

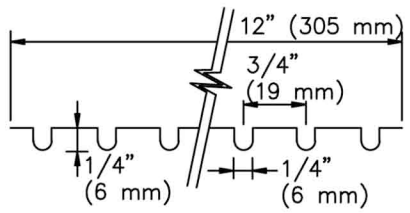

GROOVING DETAIL

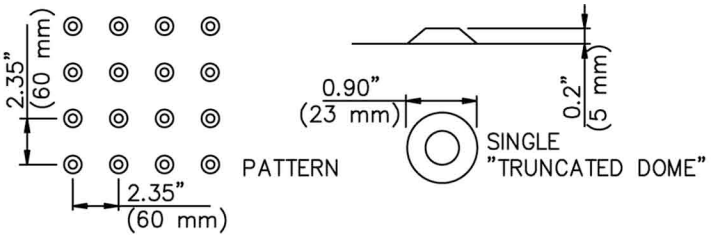

DETECTABLE WARNING DETAIL

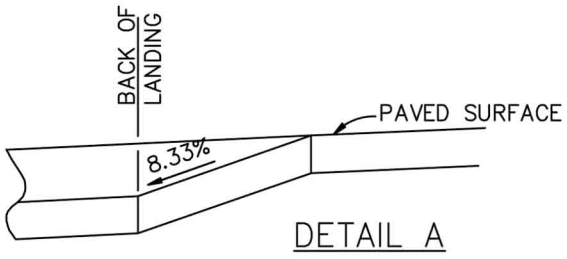

DETAIL A

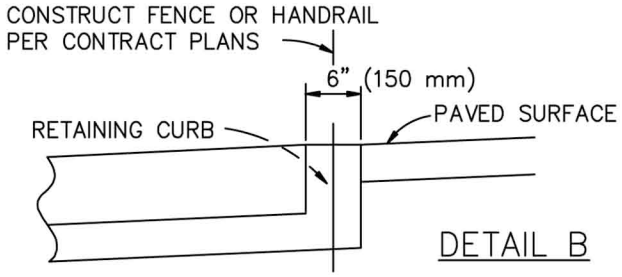

DETAIL B

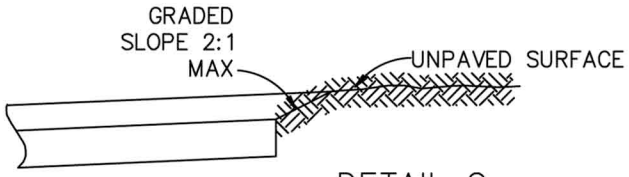

DETAIL C

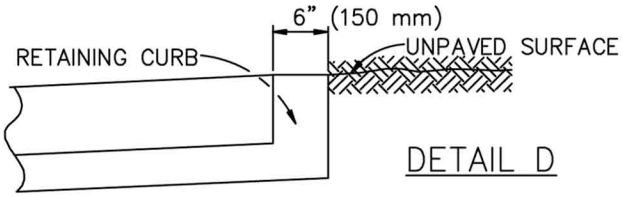

DETAIL D

GENERAL NOTES:

1. CONCRETE SHALL BE CLASS 520-C-2500 (310-C-17) CONFORMING TO SSPWC 201-1.1.2 AND SHALL BE 4" (100 mm) THICK.
2. THE RAMP SHALL HAVE A 12" (305 mm) WIDE BORDER WITH 1/4" (6 mm) GROOVES APPROXIMATELY 3/4" (19 mm) OC. SEE GROOVING DETAIL.
3. THE RAMP SURFACE SHALL HAVE A TRANSVERSE BROOMED SURFACE TEXTURE CONFORMING TO SSPWC 303-1.9.
4. USE DETAIL "A" OR "B" IF EXISTING SURFACE BEHIND LANDING IS PAVED.
5. USE DETAIL "C" OR "D" IF EXISTING SURFACE BEHIND LANDING IS UNPAVED.
6. R = 3' (900 mm) UNLESS OTHERWISE SHOWN ON PLAN. SEE SHEET 7.
7. ANGLE = $\Delta/2$ UNLESS OTHERWISE SHOWN ON PLAN.
8. CONSTRUCT DETECTABLE WARNING SURFACE PER DETAIL THIS SHEET. MATERIALS SHALL BE PER CONTRACT DOCUMENTS.

STANDARD PLANS FOR PUBLIC WORKS CONSTRUCTION	STANDARD PLAN
CURB RAMP	**111-5**
	SHEET 10 OF 10

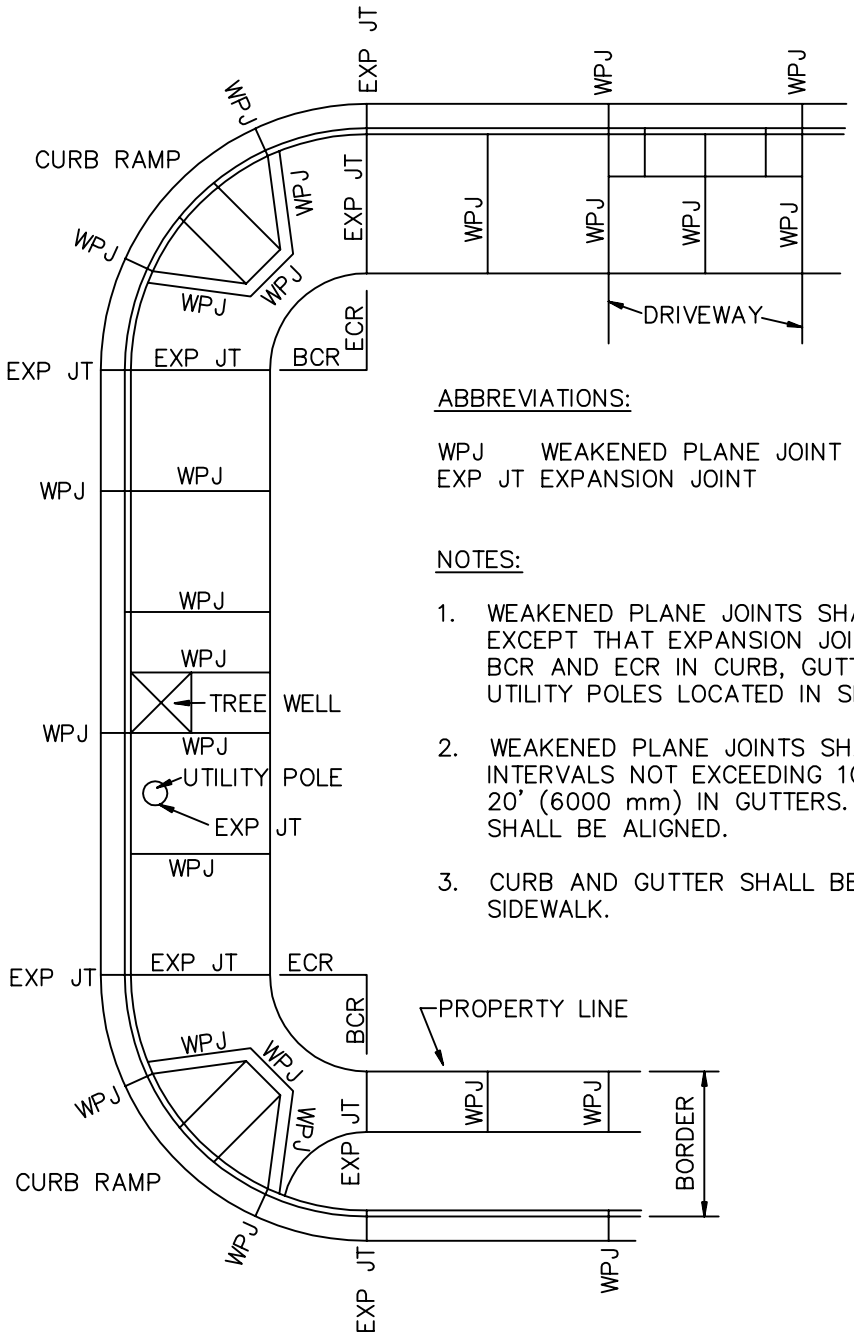

ABBREVIATIONS:

WPJ	WEAKENED PLANE JOINT	BCR	BEGINNING OF CURB RETURN
EXP JT	EXPANSION JOINT	ECR	END OF CURB RETURN

NOTES:

1. WEAKENED PLANE JOINTS SHALL BE USED FOR ALL JOINTS, EXCEPT THAT EXPANSION JOINTS SHALL BE PLACED AT THE BCR AND ECR IN CURB, GUTTER AND SIDEWALK, AND AROUND UTILITY POLES LOCATED IN SIDEWALK AREAS.
2. WEAKENED PLANE JOINTS SHALL BE CONSTRUCTED AT REGULAR INTERVALS NOT EXCEEDING 10' (3000 mm) IN WALKS AND 20' (6000 mm) IN GUTTERS. JOINTS IN CURB AND WALK SHALL BE ALIGNED.
3. CURB AND GUTTER SHALL BE CONSTRUCTED SEPARATELY FROM SIDEWALK.

STANDARD PLANS FOR PUBLIC WORKS CONSTRUCTION

PROMULGATED BY THE PUBLIC WORKS STANDARDS INC. GREENBOOK COMMITTEE 1984 REV. 1996, 2009

CURB AND SIDEWALK JOINTS

USE WITH STANDARD SPECIFICATIONS FOR PUBLIC WORKS CONSTRUCTION

STANDARD PLAN 112-2

SHEET 1 OF 1

WALK OR FILL–IN REPLACEMENT FOR EXCAVATIONS MADE PARALLEL TO CURB OR PROPERTY LINE

WALK ADJACENT TO PROPERTY LINE

WALK LESS THAN 5' (1500 mm) WIDE

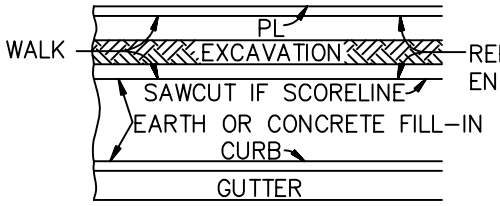

WALK 5' (1500 mm) WIDE OR MORE

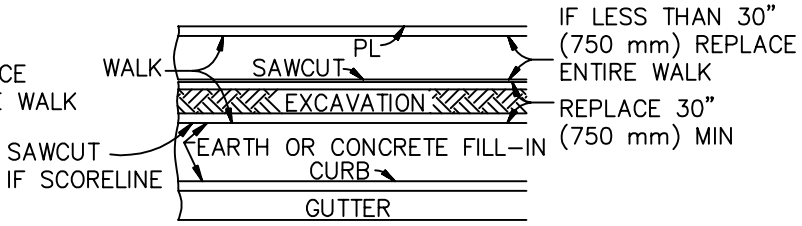

WALK ADJACENT TO CURB

WALK LESS THAN 5' (1500 mm) WIDE

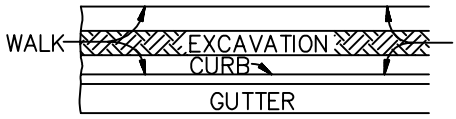

WALK 5' (1500 mm) WIDE OR MORE

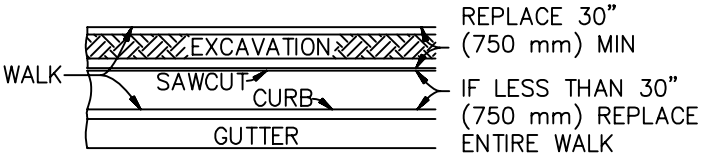

FILL–IN REPLACEMENT

FILL–IN LESS THAN 5' (1500 mm) WIDE

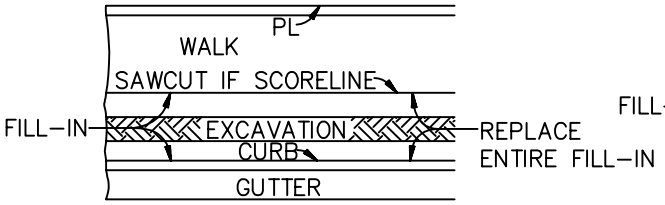

FILL–IN 5' (1500 mm) WIDE OR MORE

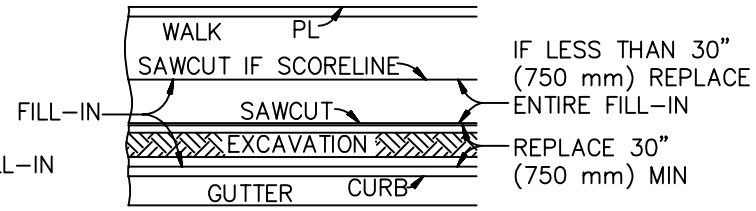

WALK OR FILL–IN REPLACEMENT FOR EXCAVATIONS MADE NORMAL TO CURB OR PROPERTY LINE

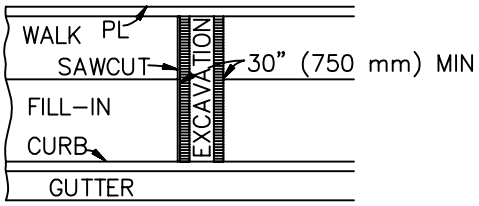

THESE REQUIREMENTS ALSO APPLY TO ENDS OF PARALLEL EXCAVATIONS.

IF AN EXCAVATION FALLS WITHIN 30" (750 mm) OF AN EXPANSION JOINT, CONSTRUCTION JOINT, WEAKENED PLANE JOINT, OR EDGE, THE CONCRETE SHALL BE REMOVED AND REPLACED TO THE JOINT OR EDGE.

IF AN EXCAVATION FALLS WITHIN 12" (300 mm) OF A SCORELINE, THE CONCRETE SHALL BE REMOVED AND REPLACED TO THE SCORELINE. THE SCORELINE SHALL BE SAWCUT BEFORE CONCRETE REMOVAL.

THE MINIMUM LENGTH OF REPLACEMENT IN BOTH CASES SHALL BE 30" (750 mm).

NOTES

1. CONCRETE WALK, FILL–IN AND DRIVEWAYS REMOVED IN CONNECTION WITH CONSTRUCTION SHALL BE REPLACED TO NEATLY SAWED EDGES. ALL CUTS SHALL BE PARALLEL TO OR PERPENDICULAR TO THE CURB; ON CURVES, THE CUT SHALL BE RADIAL TO THE CURB.

2. DRIVEWAY APRONS IN WHICH THE "W" DISTANCE IS LESS THAN 11' (3300 mm) SHALL BE REPLACED IN THEIR ENTIRETY IF CUT IN ANY AREA.

3. DRIVEWAY APRONS IN WHICH THE "W" DISTANCE IS 11' (3300 mm') OR MORE MAY BE CUT WITHIN THE "W" SECTION. THE MINIMUM REPLACEMENT SHALL BE 30" (750 mm) IN LENGTH. THE MINIMUM DISTANCE ALLOWED BETWEEN SUCH CUTS SHALL BE 14' (4200 mm').

4. DRIVEWAY APRONS IN WHICH THE "W" DISTANCE IS 11' (3300 mm) OR MORE MAY BE CUT IN THE "X" OR "R" SECTION. REPLACEMENT SHALL BE THE ENTIRE "X" OR "R" SECTION.

5. DRIVEWAY APRONS SHALL BE REPLACED FROM THE BACK OF THE CURB TO THE FRONT EDGE OF THE WALK, EXCEPT, WHERE WALK IS ADJACENT TO CURB, REPLACEMENT SHALL BE FROM BACK OF CURB TO BACK OF WALK.

6. WALK PORTIONS OF DRIVEWAYS SHALL BE REPLACED AS SHOWN ABOVE FOR EXCAVATIONS MADE PARALLEL OR NORMAL TO CURB.

7. REPLACEMENT OF THE "X" OR "R" SECTION SHALL MATCH EXISTING CONSTRUCTION.

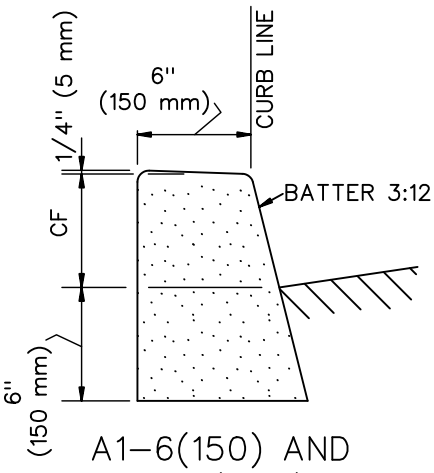

A1–6(150) AND
A1–8(200)

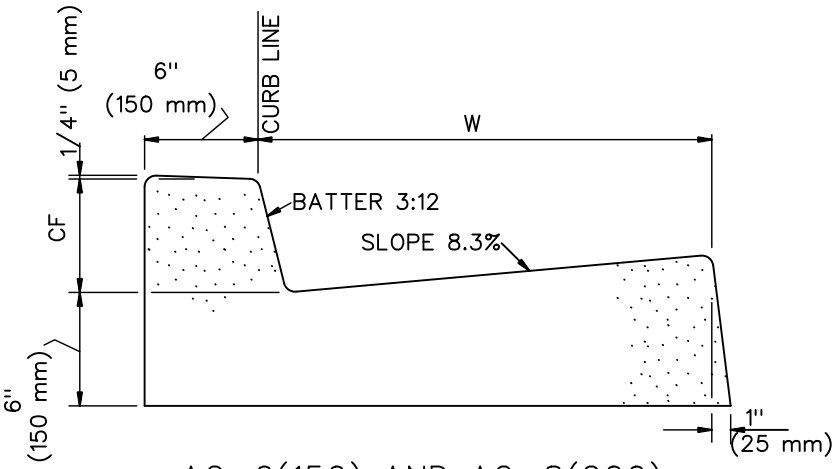

A2–6(150) AND A2–8(200)

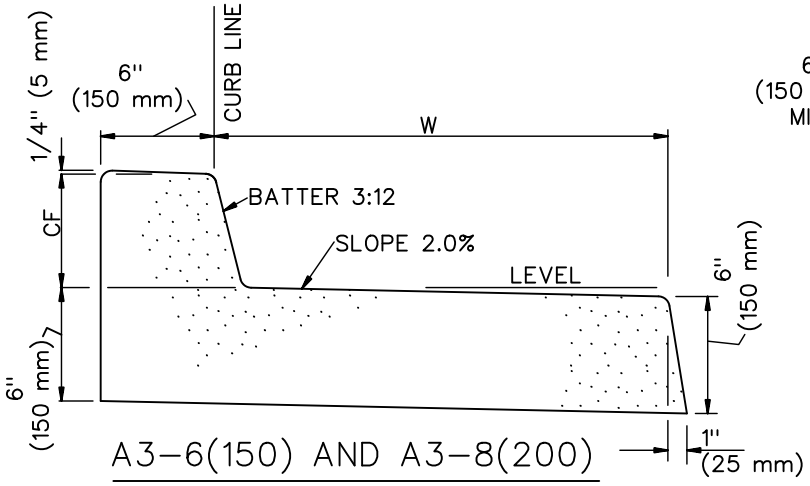

A3–6(150) AND A3–8(200)

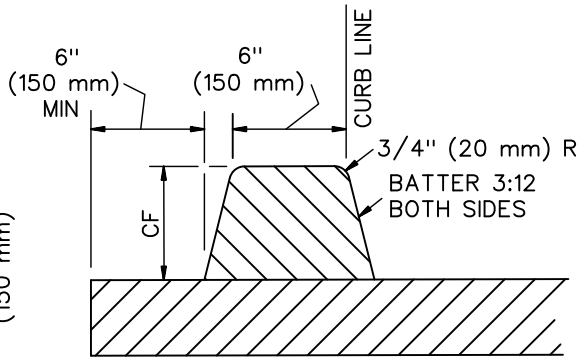

D1–6(150) AND
D1–8(200)

NOTES:

1. THE LAST NUMBER IN THE DESIGNATION IS THE CURB FACE (CF) HEIGHT, INCHES (mm). IF SHOWN AS 'VAR' THE CURB FACE VARIES.
2. GUTTER WIDTH, W, IS 24" (600 mm) UNLESS OTHERWISE SPECIFIED.
3. TYPES A1, A2, A3 AND C1 SHALL BE CONSTRUCTED OF CONCRETE.
4. TYPE D1 CURB SHALL BE CONSTRUCTED OF ASPHALT CONCRETE.
5. TYPE C1 CURB SHALL BE ANCHORED WITH STEEL DOWELS AS SHOWN OR WITH AN EPOXY APPROVED BY THE ENGINEER.
6. ALL EXPOSED CORNERS ON CONCRETE CURBS AND GUTTERS SHALL BE ROUNDED WITH A 1/2" (15 mm) RADIUS.

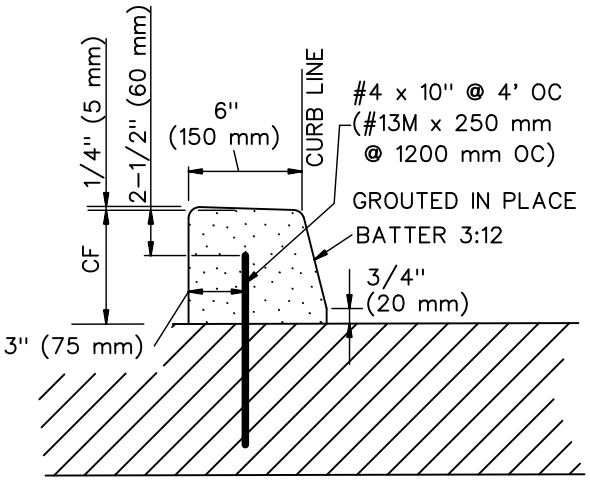

C1–6(150) AND C1–8(200)

STANDARD PLANS FOR PUBLIC WORKS CONSTRUCTION

PROMULGATED BY THE
PUBLIC WORKS STANDARDS INC.
GREENBOOK COMMITTEE
1984
REV. 1986, 2009, 2021

CURB AND GUTTER – BARRIER

USE WITH STANDARD SPECIFICATIONS FOR PUBLIC WORKS CONSTRUCTION

STANDARD PLAN
120–3
SHEET 1 OF 1

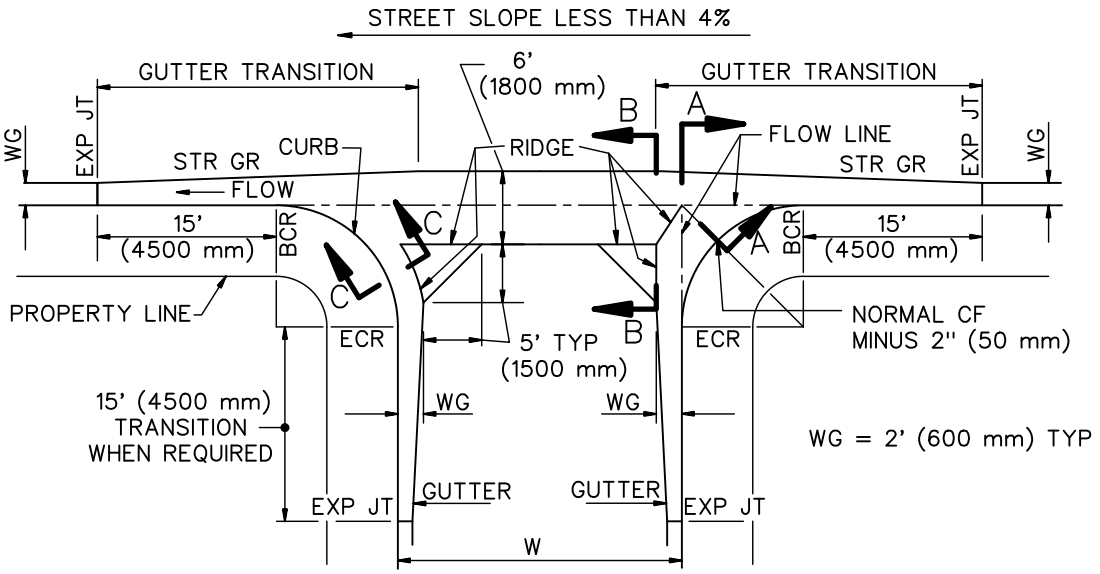

TYPICAL CROSS GUTTER PLAN
STREET SLOPE LESS THAN 4%

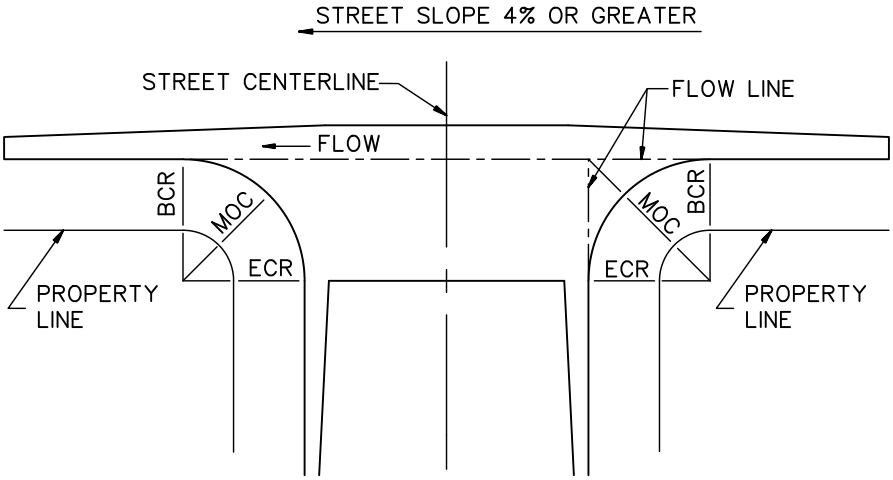

TYPICAL CROSS GUTTER PLAN
STREET SLOPE 4% OR GREATER

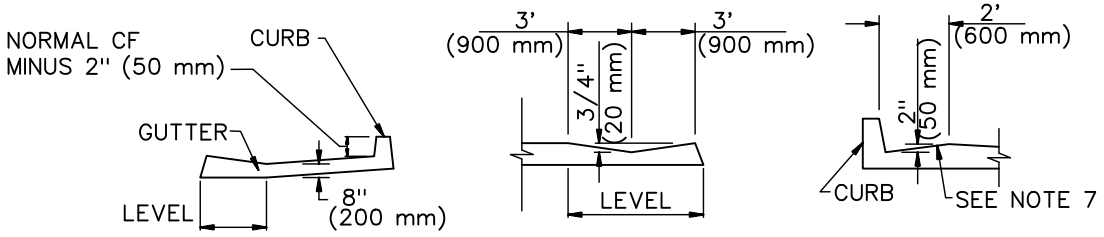

SECTION A–A SECTION B–B SECTION C–C

STANDARD PLANS FOR PUBLIC WORKS CONSTRUCTION

PROMULGATED BY THE
PUBLIC WORKS STANDARDS INC.
GREENBOOK COMMITTEE
1984
REV. 1993, 2009, 2021

CROSS AND LONGITUDINAL GUTTERS

USE WITH STANDARD SPECIFICATIONS FOR PUBLIC WORKS CONSTRUCTION

STANDARD PLAN
122–3
SHEET 1 OF 2

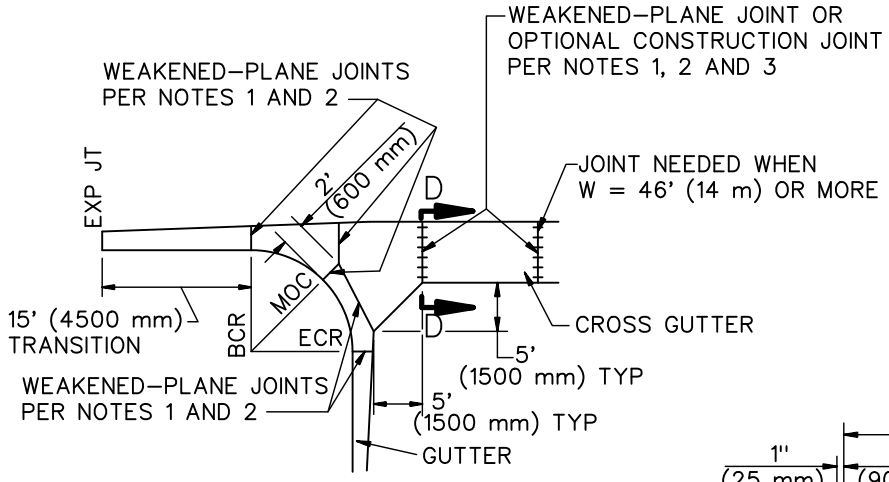

TYPICAL JOINT PLAN

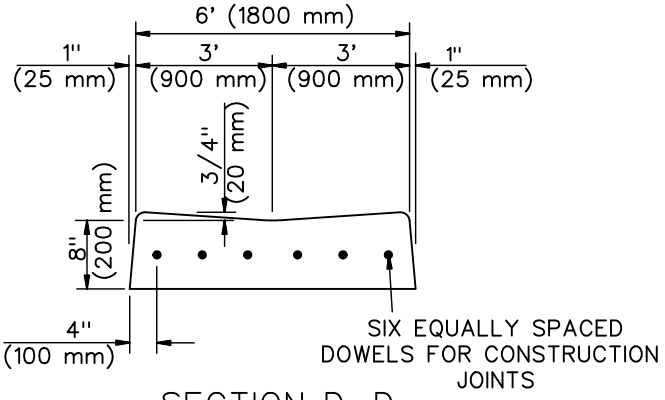

SECTION D–D

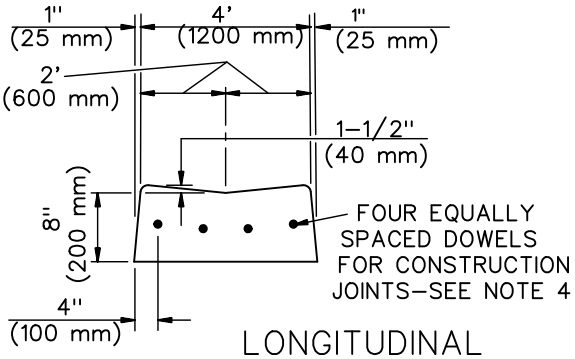

LONGITUDINAL GUTTER

NOTES:

1. WEAKENED–PLANE AND/OR CONSTRUCTION JOINTS SHALL BE PLACED IN CURB AND GUTTER AT LOCATIONS SHOWN ON THE TYPICAL JOINT PLAN HEREON.
2. WEAKENED–PLANE JOINTS SHALL BE PLASTIC CONTROL JOINTS OR 1–1/2" (40 mm) DEEP SAW CUTS. CONCRETE SAWING SHALL TAKE PLACE WITHIN 24 HOURS AFTER CONCRETE IS PLACED.
3. DOWELS FOR CONSTRUCTION JOINTS SHALL BE #4 BARS 18" LONG (#13M BARS 450 mm LONG).
4. PLACE A WEAKENED–PLANE OR CONSTRUCTION JOINT WHERE LONGITUDINAL ALLEY GUTTER JOINS CONCRETE ALLEY INTERSECTION.
5. ALL EXPOSED CORNERS ON PCC CURBS AND GUTTERS SHALL BE ROUNDED WITH 1/2" (15 mm) RADIUS.
6. CONCRETE SHALL BE INTEGRAL WITH CURB UNLESS OTHERWISE SPECIFIED.
7. ADJACENT TO CURB RAMPS, CONCRETE SLOPE SHALL BE 5% MAXIMUM FOR A DISTANCE OF 5 FEET (1525 mm) FROM THE CURB FACE FOR THE WIDTH OF THE WIDTH OF THE RAMP, NOT INCLUDING SIDE TRANSITION CURBS.

STANDARD PLANS FOR PUBLIC WORKS CONSTRUCTION	STANDARD PLAN
CROSS AND LONGITUDINAL GUTTERS	**122–3**
	SHEET 2 OF 2

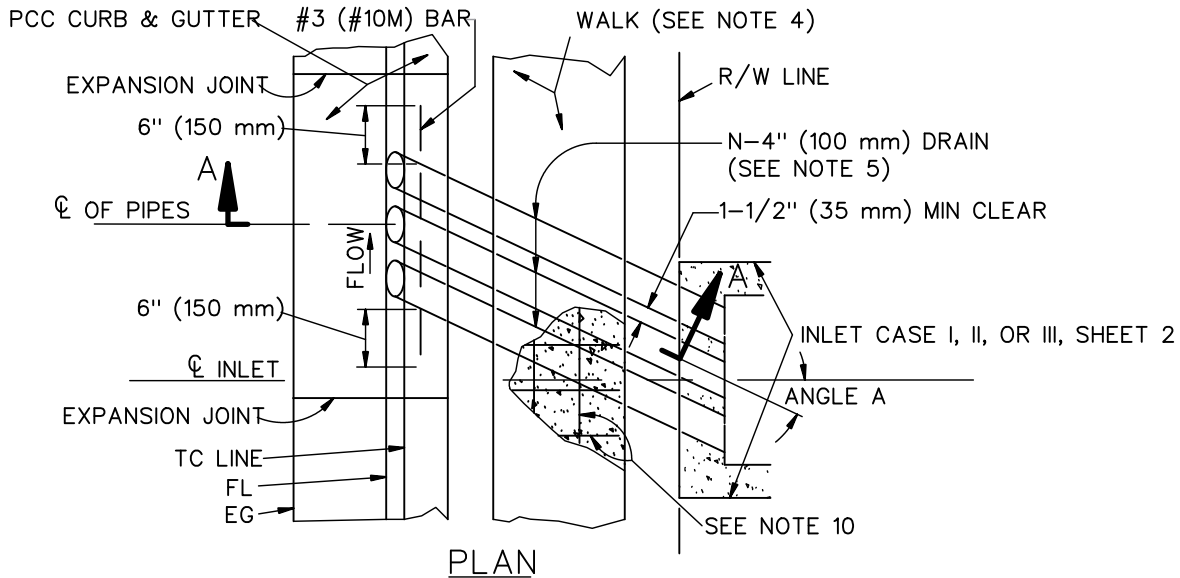

PLAN

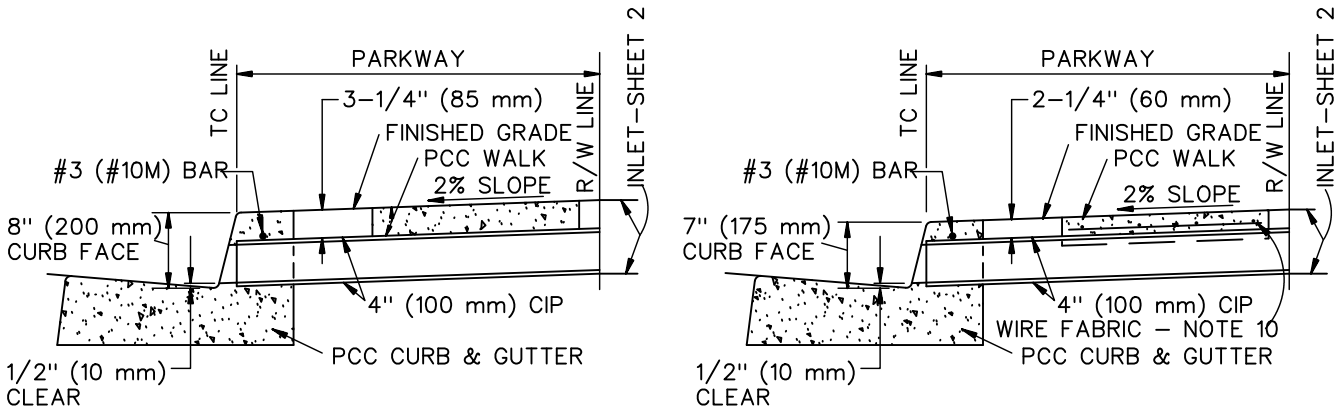

SECTION A–A

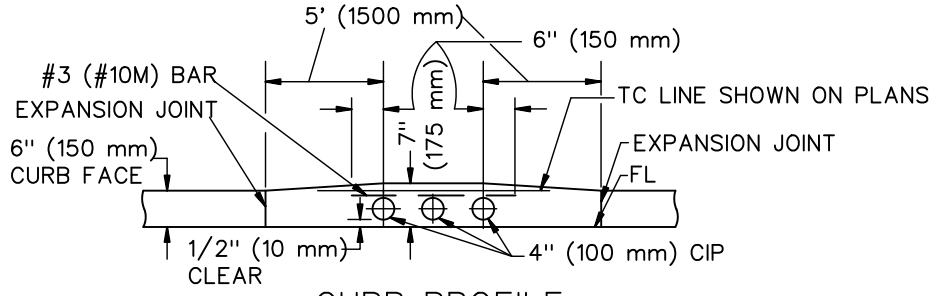

CURB PROFILE
6" (150 mm) CURB FACE

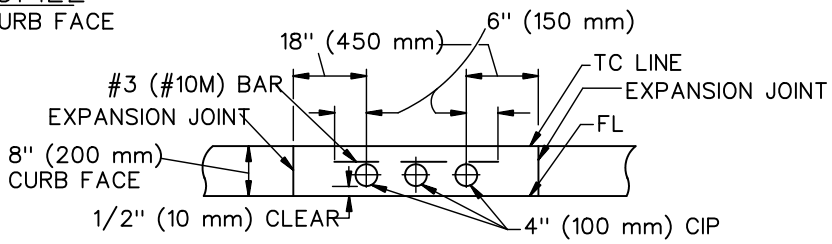

NOTE: PROFILES APPLY TO ANY NUMBER OF PIPES

CURB PROFILE
8" (200 mm) CURB FACE

STANDARD PLANS FOR PUBLIC WORKS CONSTRUCTION

PROMULGATED BY THE
PUBLIC WORKS STANDARDS INC.
GREENBOOK COMMITTEE
1984
REV. 1992, 1996, 2009, 2021

CURB DRAIN

USE WITH STANDARD SPECIFICATIONS FOR PUBLIC WORKS CONSTRUCTION

STANDARD PLAN
150–4
SHEET 1 OF 2

NOTES

1. IF THE TOE OF SLOPE IS ALLOWED WITHIN THE R/W, CASE I INLET BEGINS AT THE TOE RATHER THAN THE R/W LINE.
2. FOR OPEN DITCH (CASE III INLET), THE 24" (600 mm) EXTENSION BEYOND THE R/W LINE IS NOT REQUIRED WHEN BACK OF WALK IS 24" (600 mm) OR MORE FROM THE R/W LINE; HOWEVER, PIPE SHALL EXTEND TO R/W LINE.
3. TOP OF INLET STRUCTURE (CASE I AND II) SHALL BE FLUSH WITH ADJACENT SURFACE WHERE PRACTICAL.
4. CONSTRUCT PCC WALK WHEN SPECIFIED ON PLAN.
5. "N" EQUALS NUMBER OF PIPES (MAXIMUM OF THREE) AS SPECIFIED ON PLAN.
6. INLET CASE TO BE SPECIFIED ON PLAN.
7. ANGLE A EQUALS 0°, UNLESS OTHERWISE SPECIFIED.
8. TYPE, DIMENSIONS AND ELEVATIONS OF PCC. CURB AND GUTTER PER PLAN.
9. UNLESS OTHERWISE SPECIFIED, FRAME AND GRATE FOR CASE II INLET SHALL BE GALVANIZED CAST IRON. WEIGHT OF FRAME AND GRATE SHALL BE 80 LBS (36 kg).
10. AT LOCATIONS WITH LESS THAN 8" (200 mm) CURB FACE, USE 6x6–W1.4xW1.4 (152x152–MW9.1xMW9.1) GALVANIZED WIRE FABRIC. WIRE FABRIC SHALL EXTEND 8" (200 mm) BEYOND THE EDGE OF CAST IRON PIPES.

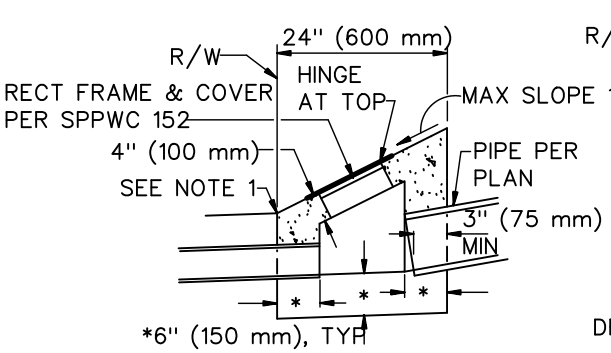

CASE I INLET
TRANSITION STRUCTURE SECTION

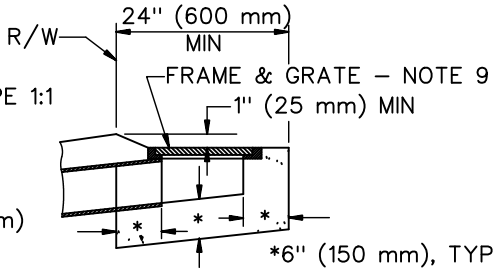

CASE II INLET
DROP INLET CATCH BASIN SECTION

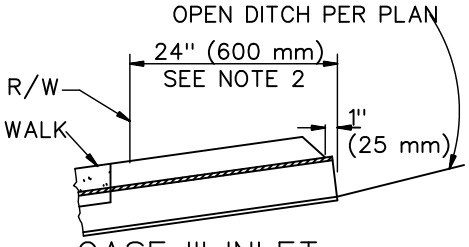

CASE III INLET
GRADED DITCH SECTION

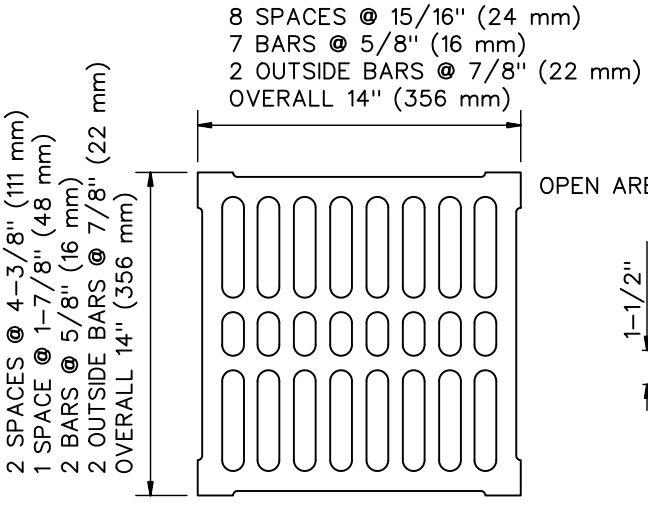

TOP OF GRATE

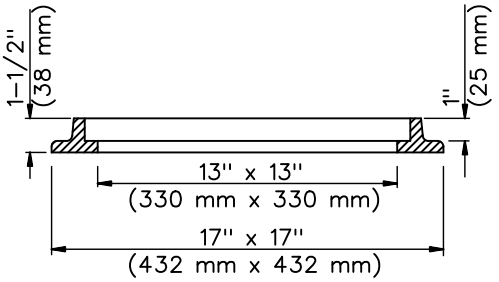

SECTION THRU FRAME

GRATE FOR CASE II INLET

STANDARD PLANS FOR PUBLIC WORKS CONSTRUCTION	STANDARD PLAN 150–4
CURB DRAIN	SHEET 2 OF 2

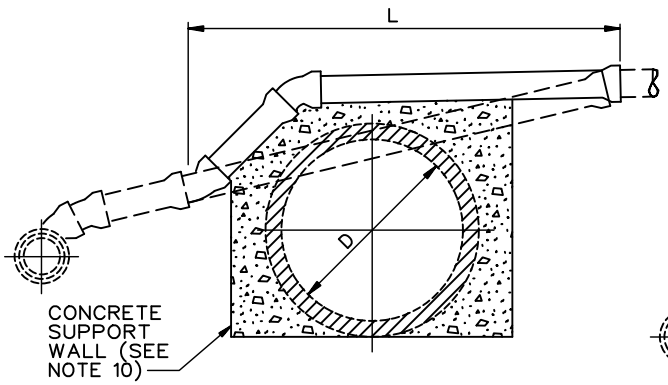

CASE A

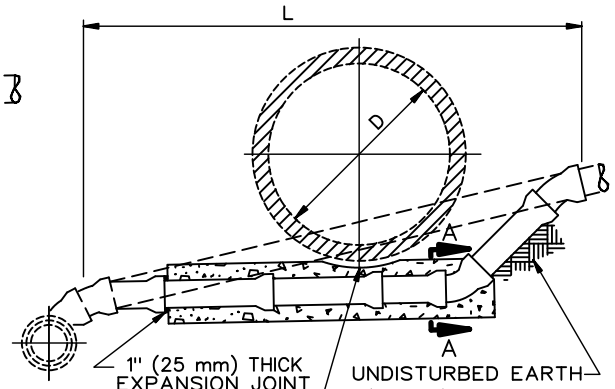

CASE D

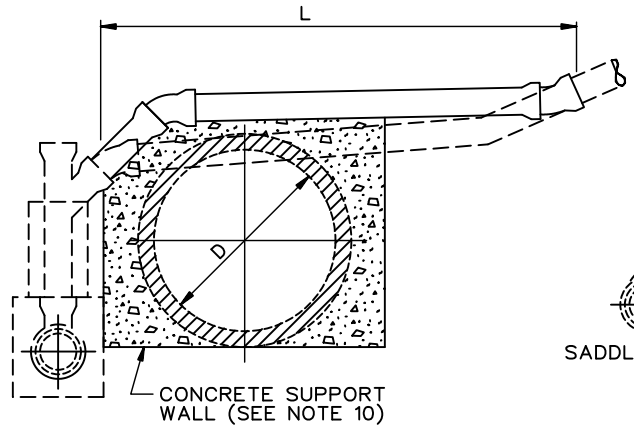

CASE B

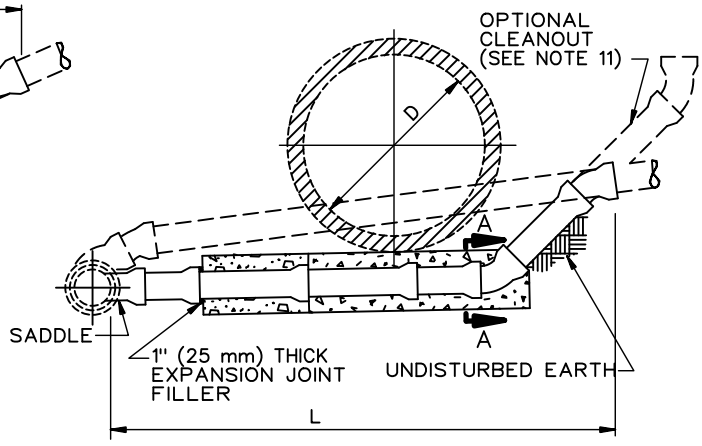

CASE E

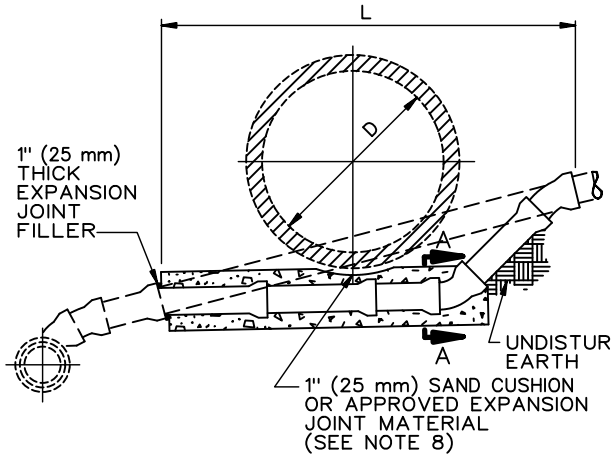

CASE C

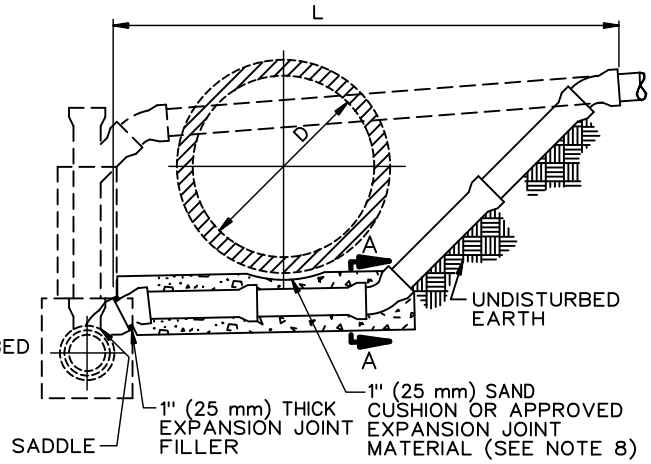

CASE F

STANDARD PLANS FOR PUBLIC WORKS CONSTRUCTION

PROMULGATED BY THE PUBLIC WORKS STANDARDS INC. GREENBOOK COMMITTEE 1984
REV. 1996, 2009, 2021

HOUSE CONNECTION REMODELING

USE WITH STANDARD SPECIFICATIONS FOR PUBLIC WORKS CONSTRUCTION

STANDARD PLAN
223-3
SHEET 1 OF 3

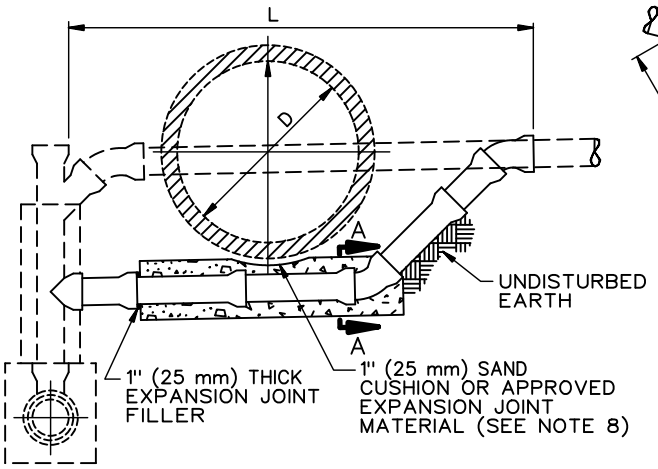

CASE G

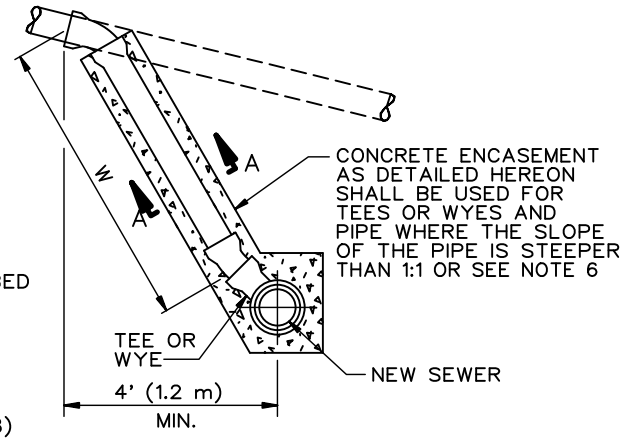

CASE R

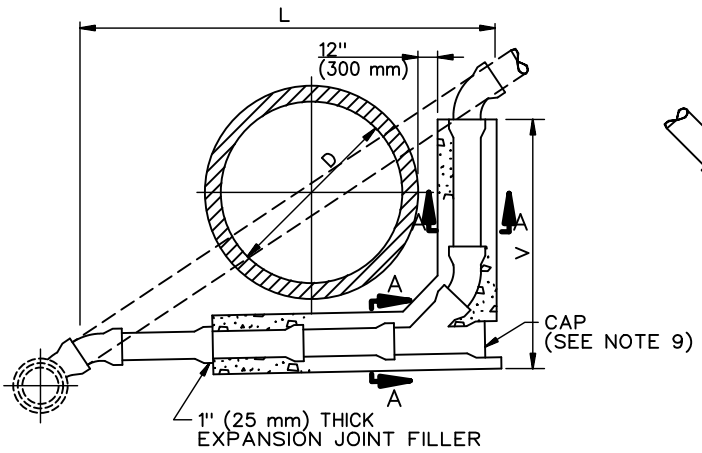

CASE H

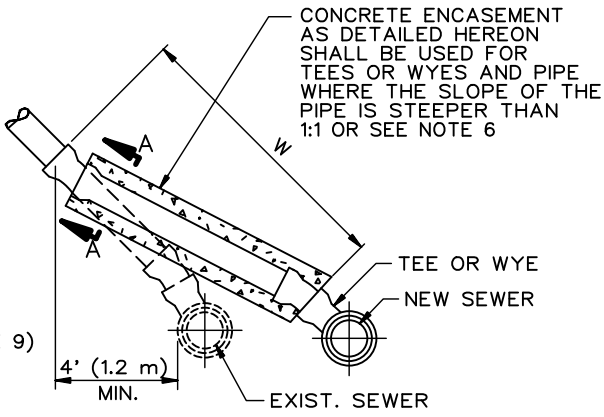

CASE S

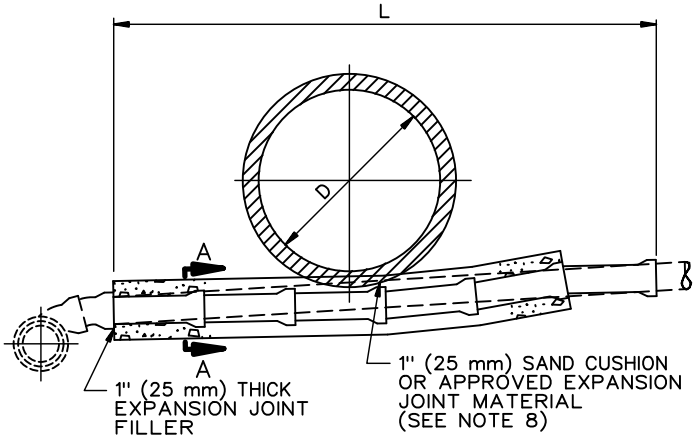

CASE K

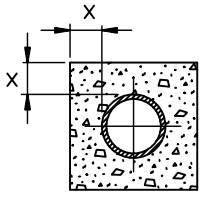

NOMINAL DIAMETER OF PIPE INCHES (mm)	MINIMUM DIMENSIONS X INCHES (mm)
6 (150)	3 (75)
8 (200)	4 (100)
10 (250)	5 (125)
12 (300)	6 (150)

SECTION A–A
CONCRETE ENCASEMENT DETAIL
(SEE NOTE 5)

STANDARD PLANS FOR PUBLIC WORKS CONSTRUCTION

HOUSE CONNECTION REMODELING

STANDARD PLAN
223–3
SHEET 2 OF 3

NOTES

1. EXCEPT AS OTHERWISE INDICATED HEREON OR ON THE PLANS, HOUSE CONNECTION REMODELING SHALL CONFORM TO THE APPLICABLE PORTIONS OF SPPWC 222.

2. VALUES D, L, V, AND W SHALL BE AS SHOWN ON THE PLANS. (DIMENSION L IS THE HORIZONTAL LENGTH OF THE HOUSE CONNECTION REMODELING).

3. EXISTING SEWERS ARE INDICATED BY DASHED LINES. HOUSE CONNECTION SEWERS TO BE CONSTRUCTED ARE INDICATED BY SOLID LINES AND SHALL BE OF THE SAME MATERIAL AS THE EXISTING SEWER. THE CONTRACTOR MAY CONSTRUCT THE SEWER WITH OTHER MATERIALS ALLOWED BY SPPWC 222 PROVIDED APPROVED ADAPTORS ARE UTILIZED.

4. 1/16 (22.5°) OR 1/8 (45°) BENDS SHALL BE USED TO REMODEL OR CONSTRUCT ANY SEWER ON A CURVE OR AT ANY CHANGE IN ALIGNMENT. WHERE PHYSICAL OR GEO-METRIC LIMITATIONS PRECLUDE THE USE OF 1/16 (22.5°) OR 1/8 (45°) BENDS, THE CONTRACTOR SHALL SUBMIT THE PROPOSED METHOD OF REMODELING OR CONSTRUCTION TO THE ENGINEER FOR APPROVAL.

5. HOUSE CONNECTION SEWERS TO BE CONSTRUCTED UNDER A PROPOSED CONDUIT SHALL BE ENCASED IN CONCRETE AS SHOWN HEREON. WHEN THE HOUSE CONNECTION SEWER SLOPE EXCEEDS 1:1 THE CONTRACTOR MAY, AT ITS OPTION, PLACE A CIRCULAR CROSS SECTION WITH MINIMUM COVER EQUAL TO DIMENSION "X" AS SHOWN ON SECTION A-A HEREON IN LIEU OF A SQUARE CROSS SECTION OF CONCRETE. CONCRETE BEDDING AND ENCASEMENT SHALL BE CLASS 450-C-2000 (250-C-14) AND SHALL EXTEND TO THE FIRST PIPE JOINT AT LEAST 1' (300 mm) BEYOND THE OD OF EACH SIDE OF THE PROPOSED CONDUIT.

6. FOR CASE R AND S, WHEN THE SLOPE OF THE PIPE EXCEEDS 1:1, THE CONTRACTOR MAY, AT ITS OPTION, CONSTRUCT A CHIMNEY CONFORMING TO SPPWC 220 ON THE NEW SEWER IN LIEU OF CONSTRUCTING THE ENCASEMENT SHOWN HEREON.

7. FOR CASES E AND F, SADDLES SHALL BE CONNECTED EITHER TO THE LENGTH OF PIPE CONTAINING THE EXISTING TEE OR WYE OR TO THE ADJACENT DOWNSTREAM PIPE LENGTH.

8. CONDUITS TO BE INSTALLED OVER OR WITHIN 1" (25 mm) OF ANY CONCRETE ENCASEMENT OR STRUCTURE, WHETHER EXISTING OR TO BE PLACED IN CONFORMITY WITH THE REQUIREMENTS HEREIN, SHALL BE INSTALLED ON A 1" (25 mm) SAND CUSHION OR APPROVED EXPANSION JOINT MATERIAL. CONCRETE ENCASEMENT INSTALLED PURSUANT TO THIS STANDARD PLAN SHALL BE SEPARATED FROM EXISTING CONDUIT WITH 1" (25 mm) THICK EXPANSION JOINT MATERIAL.

9. THOSE PORTIONS OF AN ABANDONED PIPE LOCATED BENEATH OR WITHIN 150 mm (6") OF A RELOCATED HOUSE CONNECTION SEWER SHALL BE REMOVED. THE EXCAVATION SHALL BE REFILLED TO THE GRADE OF THE NEW PIPE INVERT WITH CLASS 100-E-100 (60-E-0.7) CONCRETE. THE CONTRACTOR MAY, AT ITS OPTION, SUBSTITUTE MECHANICALLY COMPACTED BACKFILL IN LIEU OF THE CLASS 100-E-100 (60-E-0.7) CONCRETE. THOSE PORTIONS OF ABANDONED PIPE NOT REMOVED SHALL BE SEALED. WHERE CAPS ARE USED, THEY SHALL BE SEALED BY FILLING THE SPACE ABOVE THE CAP WITH SAND AND A 1" (25 mm) THICK COATING OF TYPE "F" MORTAR.

10. SUPPORT WALLS SHALL CONFORM TO SPPWC 224.

11. WHEN INDICATED ON THE PLANS OR THE SPECIAL PROVISIONS, A CLEANOUT SHALL BE CONSTRUCTED IN CONJUNCTION WITH CASE E AS FOLLOWS:

    A. SUBSTITUTE A "Y" FOR THE 45° BEND.
    B. PLACE A 45° BEND ON THE UPPER END OF THE "Y".
    C. CAP TOP OF 45° BEND WITH A CAP AND SEAL WITH 1" (25 mm) THICK TYPE "F" MORTAR AROUND THE CIRCUMFERENCE OF THE CAP.

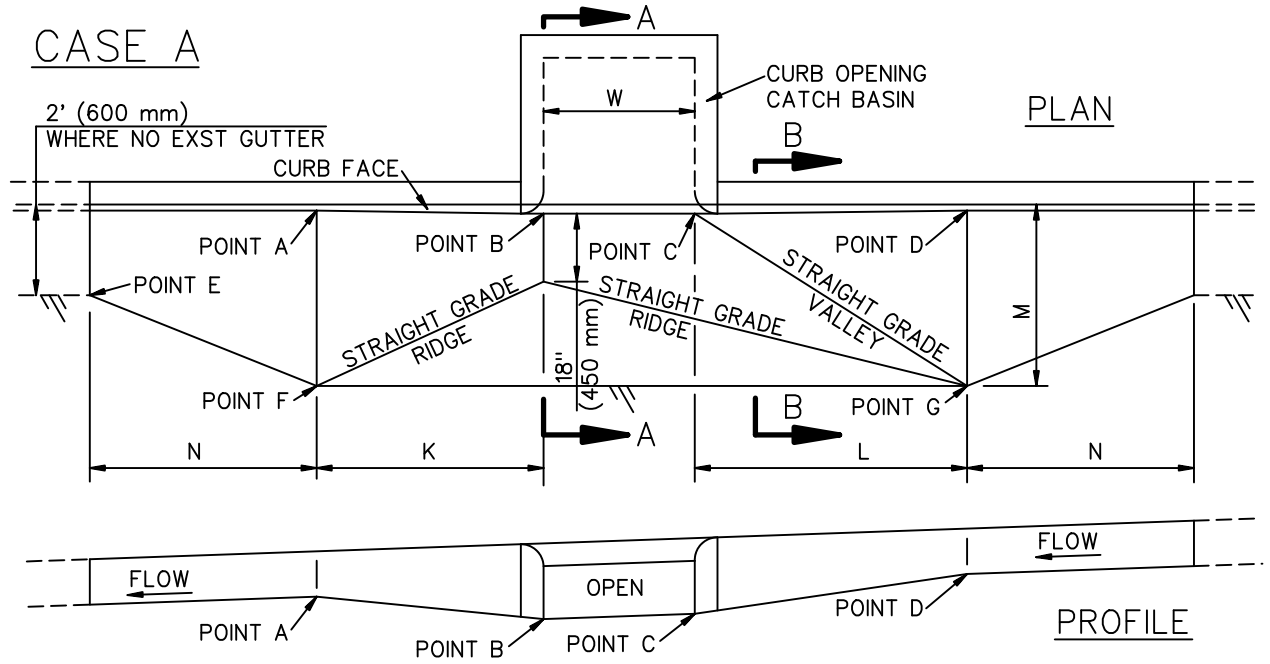

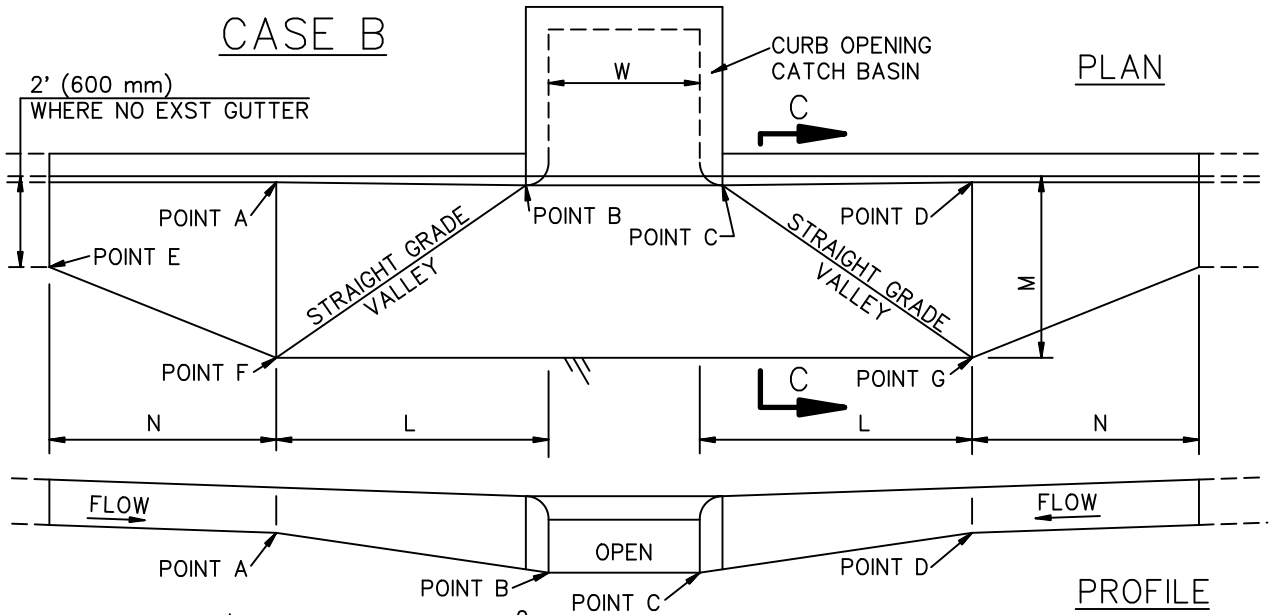

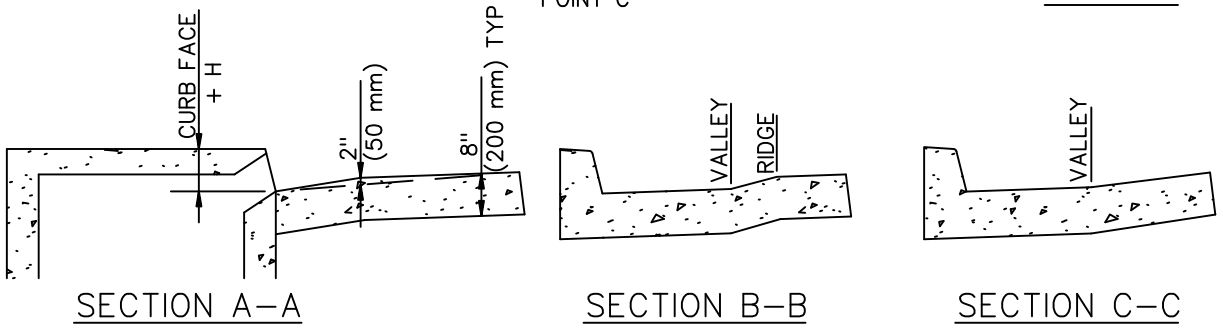

STANDARD PLANS FOR PUBLIC WORKS CONSTRUCTION

PROMULGATED BY THE
PUBLIC WORKS STANDARDS INC.
GREENBOOK COMMITTEE
1984
REV. 1996, 2005, 2009, 2021

LOCAL DEPRESSIONS AT CATCH BASINS

USE WITH STANDARD SPECIFICATIONS FOR PUBLIC WORKS CONSTRUCTION

STANDARD PLAN
313–4
SHEET 1 OF 4

CASE C

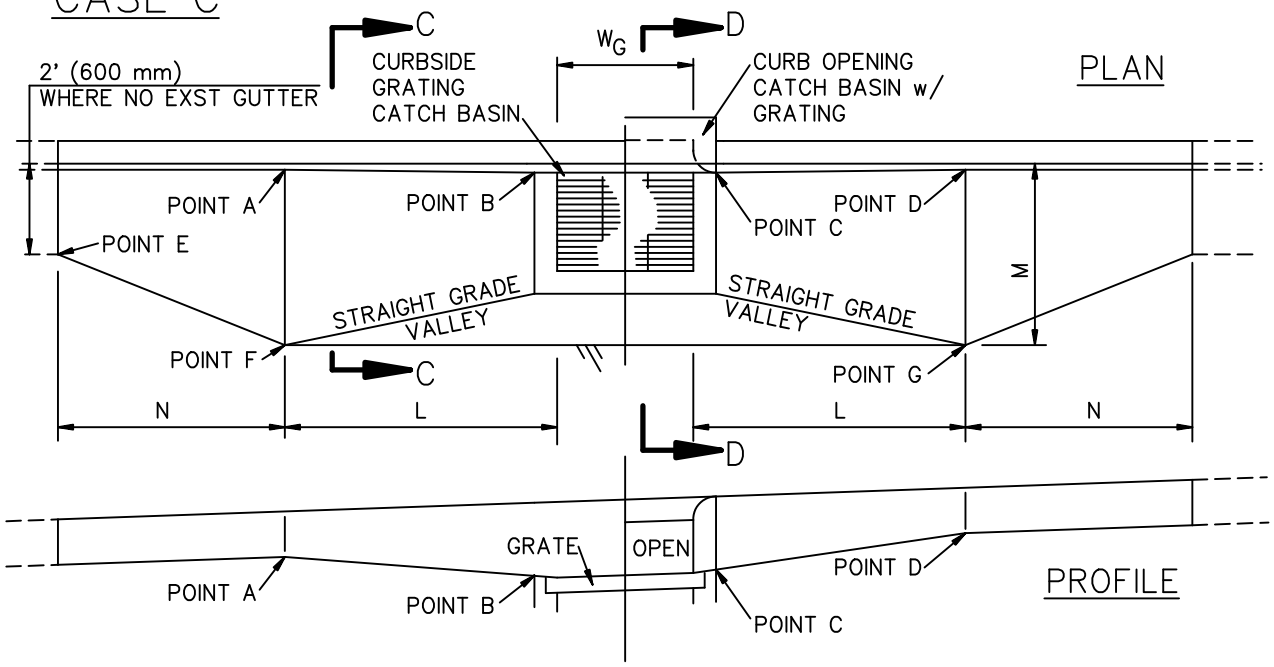

CASE D

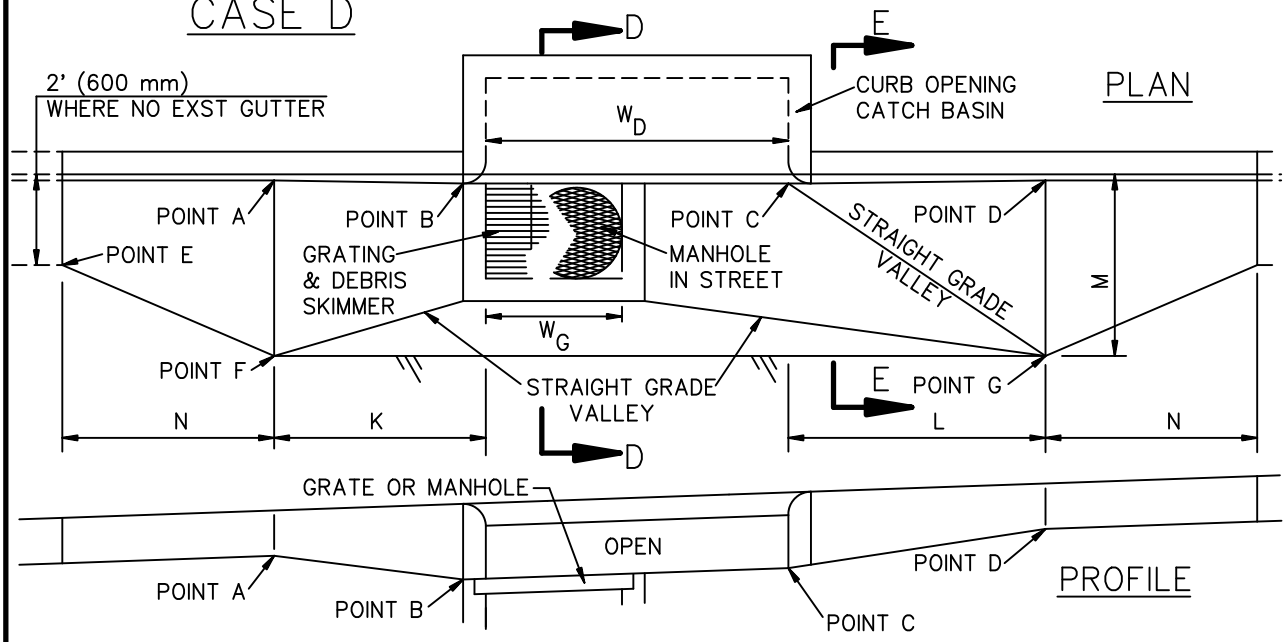

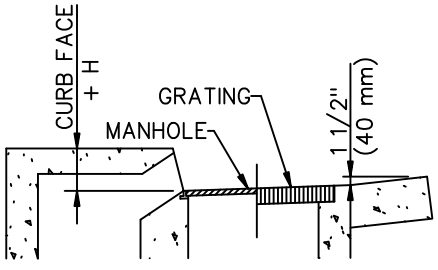

SECTION D–D

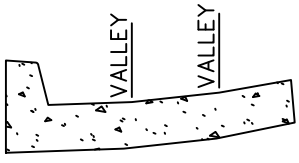

SECTION E–E

STANDARD PLANS FOR PUBLIC WORKS CONSTRUCTION

LOCAL DEPRESSIONS AT CATCH BASINS

STANDARD PLAN
313–4
SHEET 2 OF 4

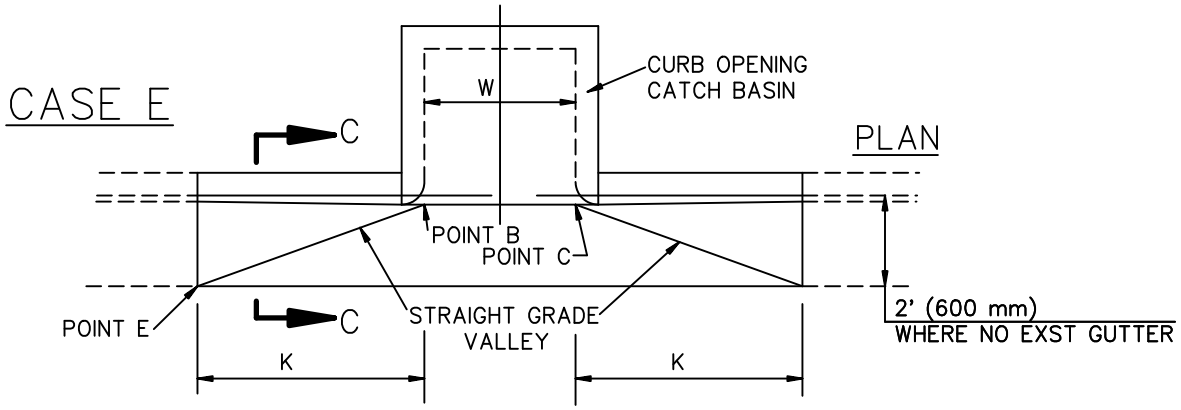

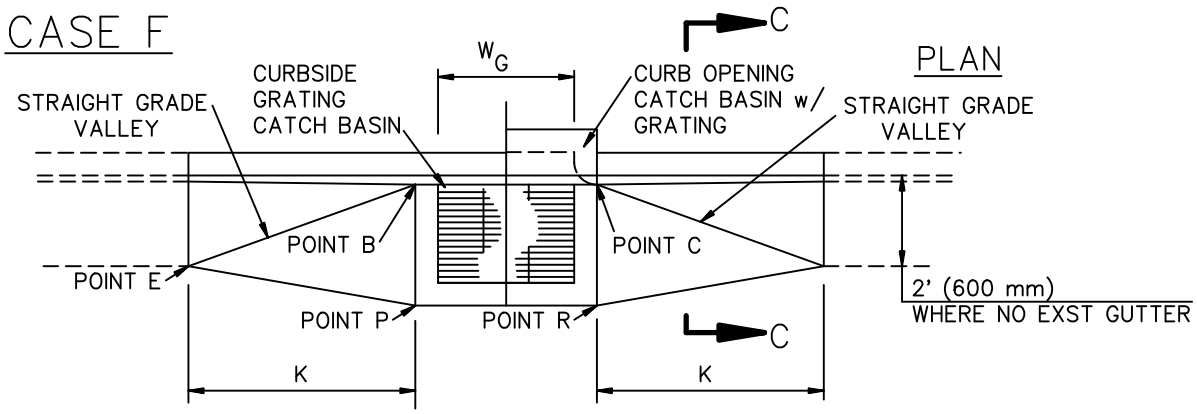

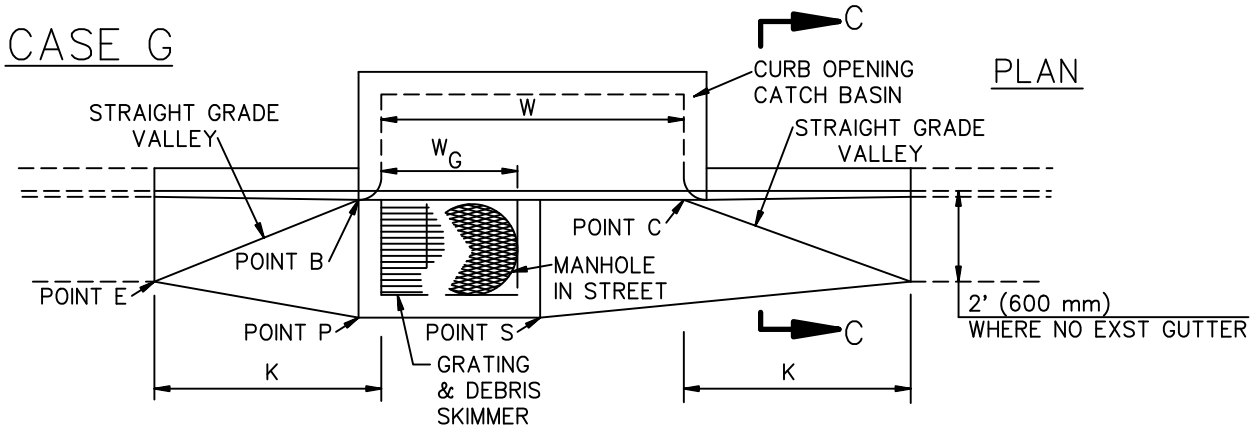

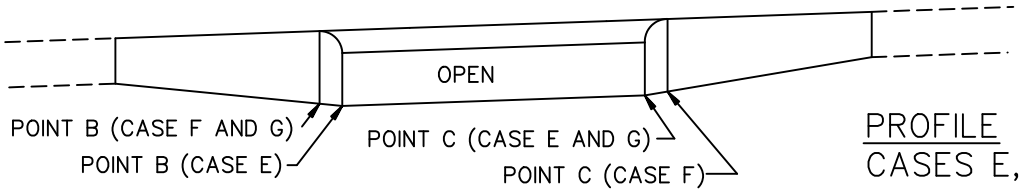

STANDARD PLANS FOR PUBLIC WORKS CONSTRUCTION

LOCAL DEPRESSIONS AT CATCH BASINS

STANDARD PLAN
313-4
SHEET 3 OF 4

NOTES:

1. ALL EXPOSED EDGES SHALL BE ROUNDED TO A 1/2" (15 mm) RADIUS.

2. THE CURB FACE AT POINTS A AND D SHALL BE THE NORMAL CURB FACE OF THE ADJACENT CURB AT THE ENDS OF THE LOCAL DEPRESSION. THE CURB FACE AT POINTS B AND C SHALL BE THE NORMAL CURB FACE OF THE ADJACENT CURB AT THE ENDS OF THE LOCAL DEPRESSION PLUS H (SEE APPLICABLE CATCH BASIN STANDARD PLAN.)

3. IN EXISTING STREETS WHERE NO PAVEMENT RECONSTRUCTION IS SPECIFIED ON THE PLANS, THE ELEVATION OF THE OUTER EDGE OF THE LOCAL DEPRESSION SHALL MEET THE FINISHED STREET SURFACE.

4. IN NEW STREETS OR IN EXISTING STREETS WHERE PAVEMENT RECONSTRUCTION IS SPECIFIED ON THE PLANS:

   THE ELEVATIONS OF POINTS F AND G SHALL BE SET H1 HIGHER THAN THE GUTTER FLOW LINE ELEVATIONS AT POINTS A AND D, RESPECTIVELY.

   THE ELEVATIONS OF POINTS P AND R SHALL BE SET H2 HIGHER THAN THE GUTTER FLOW LINE ELEVATIONS AT POINTS B AND C, RESPECTIVELY.

   THE ELEVATION OF POINT S SHALL BE SET H2 HIGHER THAN THE ELEVATION AT THE NEAREST GUTTER FLOW LINE.

   WHERE THERE IS NO GUTTER ADJACENT TO THE LOCAL DEPRESSION, THE ELEVATION OF POINT E SHALL BE SET H3 HIGHER THAN THE ELEVATION AT THE NEAREST TOE OF CURB.

5. DIMENSIONS:

   H, H1, H2 AND H3 SHALL BE AS NOTED ON THE PLANS.

   G = 24" (600 mm)

   K = 5'–0" (1500 mm)

   L = 6'–0" (1800 mm)

   M = 4'–0" (1200 mm)

   N = 5'–0" (1500 mm)

   W = WIDTH OF CURB OPENING FOR CATCH BASIN

   W_G = WIDTH OF GRATING(S) FOR CATCH BASIN

STANDARD PLANS FOR PUBLIC WORKS CONSTRUCTION	STANDARD PLAN
LOCAL DEPRESSIONS AT CATCH BASINS	**313–4**
	SHEET 4 OF 4

APPENDIX V

FY 19-20 STREET IMPROVEMENT PROJECT
PROJECT SPECIFICATION NO. 2020-01 (002001)
IN THE CITY OF SOUTH PASADENA, CALIFORNIA

Metro Construction Management and Safety Coordination

Approved for use on June 7, 2023
294856.v3

Metro Construction Management & Safety Coordination: Utility Projects

Technical review and approval by Metro Engineering is required before Metro Construction Management (CM) can coordinate with Applicant. The steps for the Applicant's coordination with CM are set forth below and must be conducted in the order listed, unless otherwise specified.

1. **Communication**
    a. Identify a Single Point of Contact (SPOC). This person is authorized to make decisions and handle communications for the project between the Applicant and Metro CM. The SPOC should be the signatory of the Metro Right-of-Entry (ROE) agreement or a designated representative of the Applicant (see Step 7).
    b. Designate an alternate contact. The alternate contact is designated by the SPOC for day-to-day communications, either from the Applicant or contractor team.
2. **Metro Adjacent Development (MAD) Handbook Review**
    a. Review the MAD Handbook[1]. Key Applicant and contractor personnel should review the MAD Handbook and become familiar with Metro-adjacent construction concerns, processes, and requirements as they apply to their project.
    b. Ask questions. The project team should seek clarification where needed and ensure supporting project staff understand Metro requirements.
3. **Preliminary Review**
    a. Provide Metro CM with a proposed project schedule. If work duration is only a few hours, provide an hour-by-hour breakdown.
    b. Provide additional materials as requested by Metro CM. Additional information that was not previously submitted during Metro Engineering technical review may be requested by Metro CM to complete preliminary CM review for constructability.
    c. Confirm if field verification is required. Some projects require field verification of Metro infrastructure prior to completion of the primary project. Metro CM may advise the Applicant if this is required during this stage. If required, the Applicant should complete Steps 4-10 for the field verification scope of work.
    d. *Contact Underground Service Alert (USA). USA locates underground infrastructure and should be contacted if verification requires digging or potholing near underground utilities.
    e. *Contact Metro Dig Alert. Metro Dig Alert locates Metro underground infrastructure. Metro requires that Dig Alert be contacted for potholing work near or on Metro ROW. Metro CM may require Dig Alert for other field verification near Metro ROW.
4. **CM Fees**
    a. Submit initial funds for Metro CM. An initial deposit toward CM Fees is required for compensation of Metro's costs and expenses incurred during project review and construction coordination. The sum of the initial deposit will be determined by Metro CM based on Metro CM's Preliminary Review and the expected level of Metro CM and support staff effort required for Applicant's project. Metro CM may request additional funds for project support throughout construction if Metro costs and expenses are greater than anticipated for any reason, including, without limitation due to project delays, emergencies, or unanticipated impacts to transit operations caused by project work.

[1] Online PDF: https://media.metro.net/2020/DevReview-Handbook.pdf

*Applies to projects that require field verification.

5. **Construction Work Plan (CWP)**
    a. *If field verification requires potholing, submit a CWP to verify Metro infrastructure. All potholing work on or near Metro ROW requires a CWP. Metro CM may request a CWP for other field verification work. Applicant must follow CWP procedures (See 6.b).
    b. Submit a CWP for primary project. Applicant must submit a CWP and accompanying Job Hazard Analysis (JHA) for Metro CM review, comment, and approval. These documents must utilize Metro CM templates and be submitted at least 20 business days prior to construction. Metro may request a CWP for related work if there is potential for material or equipment to foul (i.e., fall onto, obstruct, or structurally undermine) Metro right-of-way (ROW).
6. **Metro Rail Safety Training**
    a. Attend Metro Rail Safety Training. Metro Rail Safety Training is required when working near Metro ROW and may be completed at any time prior to work taking place. It is required for all Applicant and contractor staff who will be working near Metro Right-of-Way (ROW).
    b. Submit copies of Rail Safety badges to Metro CM. Upon completion of Rail Safety Training, attendees are provided a badge; Applicant must send pictures of these badges to Metro.
7. **Right-of-Entry (ROE) / License Agreement**
    a. Secure a ROE permit from Metro Real Estate. A Metro ROE is a written approval granted by Metro Real Estate to enter onto Metro property or to perform work in a location where there is potential to impact Metro operations. Metro CM will inform the Applicant of the appropriate contact with Metro Real Estate to secure a ROE. The Applicant will be responsible for any necessary action taken by Metro to mitigate safety concerns caused by unauthorized work, including work performed without an ROE or authorized CWP with potential to foul Metro ROW.
    b. Obtain a License Agreement from Metro Real Estate, if required. In addition to and separate from the ROE, a License Agreement is required and provided at Metro's discretion when work includes permanent placement of equipment and/or utility lines within Metro ROW. Metro Real Estate will advise if a License Agreement is required.
8. **Readiness Review**
    a. Confirm if a Readiness Review Meeting with Metro CM is required. Following approval of the CWP and prior to completing Track Allocation (Step 9), Metro CM may request a Readiness Review Meeting with the Applicant to clarify Metro's work requirements and expectations. The SPOC and alternate contact should attend the Readiness Review Meeting.
9. **Metro Track Allocation (TA)**
    a. Submit online Metro TA Request Form. Metro TA is a permit granted by Metro Rail Operations Control to allocate a section of track and perform work on, over, under, or adjacent to Metro ROW. It specifies key work activities and allows Applicants to request Metro support if needed. CWP approval comments will note if any Metro support is required based on the work activity. Project teams must submit the TA Request Form(s) no fewer than nine calendar days in advance of the planned work week either as an "FYI" to notify Metro Operations of adjacent work or to request and confirm Metro support. TA Request Form(s) that include a request for single tracking around work (i.e., moving train travel to the track farthest from the work) must submitted three weeks in advance and will be approved at Metro's discretion. Failure to submit the Form in a timely manner may result in delays to project schedule.
    b. Attend weekly TA Meeting. Following submittal of the TA Request Form, the SPOC or alternate must attend the standing TA Meeting to confirm work requests and answer questions about the work. Metro Operations will approve work permits and confirm Metro support requests.
    c. Sign TA Work Permit. The Applicant must sign and return TA Work Permits, which are emailed to the Applicant after work approval at the weekly TA Meeting.

*Applies to projects that require field verification.

10. Construction

a. Carry safety badges. Personnel with Metro Rail Safety Training (Step 6) must always carry their current safety badge on their person when working near Metro ROW. Trained personnel must be capable of identifying existing and predictable hazards in the surroundings or working conditions which are dangerous to employees and must be authorized by the Applicant to take prompt corrective measures to eliminate such conditions.

b. Activate Work Permit. The SPOC or designated alternate must call the Rail Operations Center and provide their TA Work Permit number at the beginning and end of each working day. No work may take place without this authorization.

c. Perform work according to the scope as accepted by Metro CM approval comments.

d. Continue to submit Metro TA Request Forms if work duration is longer than one week.

e. *Submit field verification results to Metro CM. Results must be reviewed and approved by Metro Engineering. Applicant may complete Steps 6-10 for the primary project only after Engineering approval.

11. Project Closeout

a. Pay any outstanding CM fees. Outstanding fees must be paid to Metro within 30 days of final request.

b. Send Metro CM a copy of project record drawings. Metro requires project record drawings for completed construction near Metro ROW be provided within 30 days of Metro's request.

*Applies to projects that require field verification.

APPENDIX VI

FY 19-20 STREET IMPROVEMENT PROJECT
PROJECT SPECIFICATION NO. 2020-01 (002001)
IN THE CITY OF SOUTH PASADENA, CALIFORNIA

Metro Construction Work Plan Utility Template

Approved for use on June 7, 2023
294856.v3

3.18 CONSTRUCTION WORK PLANS

A. Prepare Construction Work Plans (CWP) for individual Work elements or as specified by Metro.

B. **Show CWP preparation activities and Readiness Review Meetings on the three week look ahead schedules.**

C. Submit CWP prior to Readiness Review Meetings described in this Section.

D. **All CWPs shall be reviewed by builder, superintendent, subcontractor personnel, including the field supervisor.**

E. Subject Work may not proceed until CWP has been approved by Metro.

F. Comments must be resolved and CWP and associated inspection checklists (if applicable) resubmitted for approval prior to commencement of Work described in CWP.

G. Address the items below in CWP as minimum. The format below must be followed. Note: Metro will not review partial submittals.

1. Description of Work and applicable Contract (approved by Metro) drawings and specification sections.

2. Include actions that are defined as "special events" in Work that may constitute exposing the public to danger, inconvenience, or risk.

3. List of current required submittals to complete Work activity.

4. Individual(s) and position(s) responsible for supervision of Work, including contact information. Applicant must be on site during construction activities to interface with Metro.

5. Planned start date of Work, progress rate expected, and extended Work hours required (i.e. Construction Schedule). An hour to hour breakdown may be requested by Metro for certain projects.

6. Prerequisite activities required including Third Party permits ie. approved Traffic Control Plan (TCP), haul route, Metro Rail Safety Training Badges, Lift plans, Quadrennial/Annual reports, Crane Operator and Qualified Rigger Certifications if applicable). Copies must accompany the submittal.

7. Include a Job Hazard Analysis (JHA) for scope of Work as a stand-alone document. Use template at end of this document.

8. Identification of Inspections and tests to be accomplished, including drawings and specifications to be used for acceptance.

9. Inspection hold points for Contractor, Metro, and third parties identified on inspection checklists.

10. A list of all the equipment to be used during each activity in the construction schedule.

11. Copies of all permits associated with the work addressed within the above CWP from federal, state, country, and local jurisdiction(s).

12. Incident Action Plan which includes a notification tree and a hierarchical contact list of all parties involved in the work effort including the project Applicant serving as a single point-of-contact (SPOC).

13. Identify and describe in detail all work activities that have a potential to foul Metro's rights-of-way. Describe how the potential to foul will be mitigated before and during construction. Identify specific hold points, inspection procedures, and QA/QC process to be implemented prior to construction activity being completed to ensure the potential to foul no longer persists

14. Name and number of the project Applicant's Safety Representative who will be on site at all times during the hours of construction (multiple representatives are acceptable within the CWP). The Safety Representative must be from the Applicant company. All work will be stopped by Metro at any point during which the Safety Representative is not on site. For reference only:

    a. Metro utilizes the following criteria below for a Safety Representative:
        i. Completed thirty (30) hours (i.e. OSHA 30 General Industry or Construction) of job specific safety training before beginning Work activities. Certification of an accredited OSHA 500 Construction Outreach course shall satisfy this requirement
        ii. Shall be competent in:
            iii. Hazard Identification and abatement
            iv. Preparation of Job Hazard Analyses
            v. Communications in Safety
            vi. Applicable Federal and State Regulations
            vii. Injury and Incident Investigations

    b. Please provide copies of any and all safety certifications for record only within the CWP

15. COVID-19 Plan for construction.

16. SPOC must have complete set of Metro-approved documents available on site and presented to Metro staff upon request.

Los Angeles County Metropolitan Transportation Authority
CS-51
Sample Worksheet for Job Hazard Analysis

Corporation:	JHA By:	JHA #:
Craft(s):	Date of Analysis:	
Briefly describe the job/task:		
Required and/or recommended Personal Protective Equipment:		

STEP IN WORK OPERATION (Detailed description)	IDENTIFIED HAZARD(S)	CONTROL(S)
1)		
2)		
3)		
4)		
Add more lines as needed….		

APPENDIX VII

FY 19-20 STREET IMPROVEMENT PROJECT
PROJECT SPECIFICATION NO. 2020-01 (002001)
IN THE CITY OF SOUTH PASADENA, CALIFORNIA

Metro Rail Safety Training Map

Rail Safety Training

100 S. Santa Fe Ave
Los Angeles, CA 90013
Classroom 10/11

Street parking is available.
Parking structure is available for Metro employees only.

- **Rail Safety is held on Wednesday's at 7:00am & 11:00 am.**
- **Must receive confirmation of reservation to attend.**

For Reservations Email: RailSafety@metro.net by 1pm the day prior to class or leave a message at (213) 617-6217.

LATE ARRIVALS WILL NOT BE ADMITTED!

NOTE: Rail Safety & WWP Combo training has been relocated to Division 21. Email RailSafety@metro.net for more information.

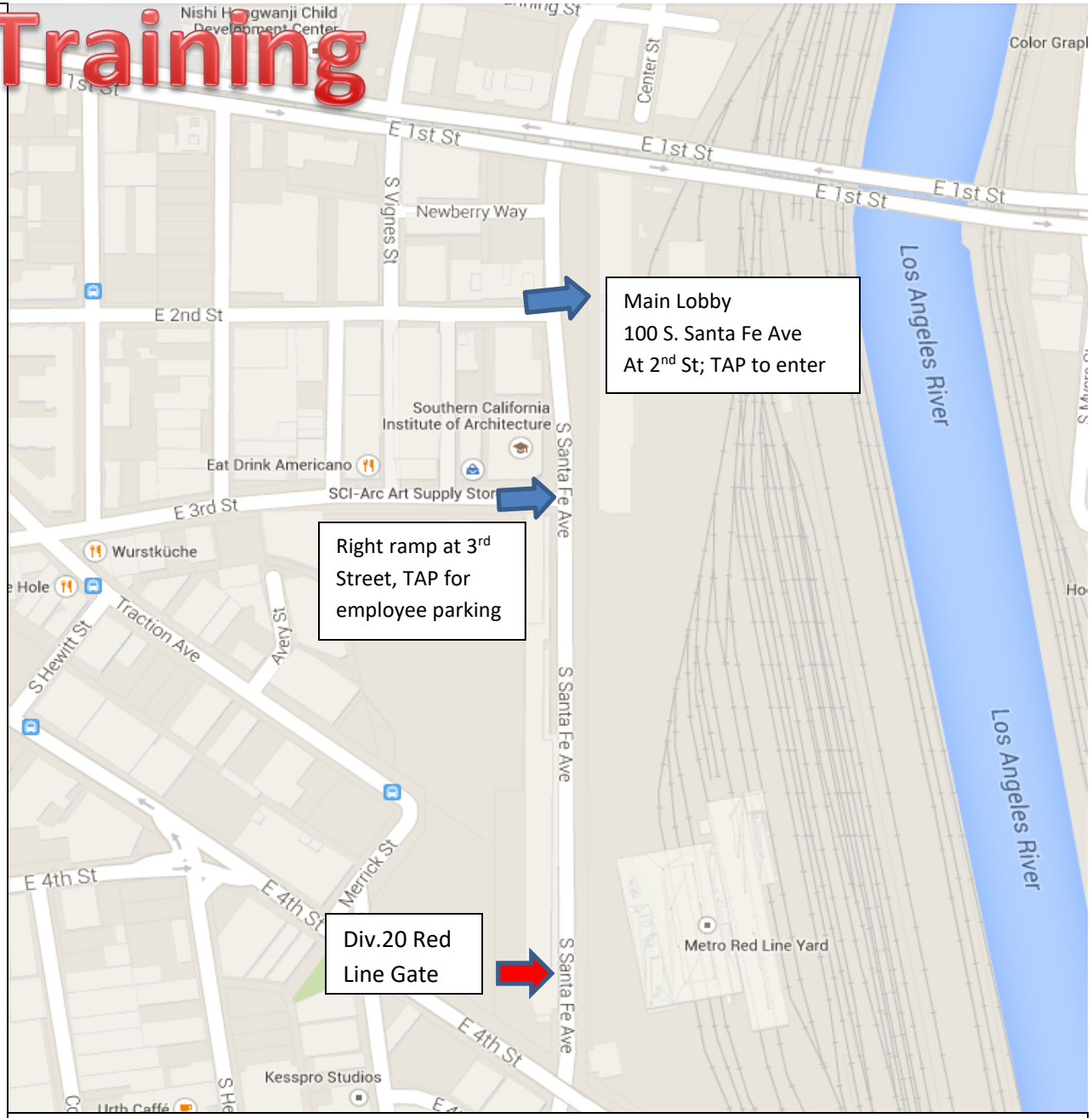

Parking garage elevator: Tap and select floor 1R for building lobby (elevator rear door will open). Tap next to inner glass double doors to exit lobby and enter Metro area. Classrooms are to the left. Instructor will let non-Metro employees into building at 2nd St. entrance.

Rail Safety & WWP Training

1800 Baker St.
Los Angeles, CA 90013
3rd Floor Instruction Room 322

- **Rail Safety (7:00am) & WWP (9:00am) combo class is held Monday through Friday.**
- **Must be Rail Safety certified to attend WWP training.**
- **Must receive confirmation of reservation.**
- **Advise Security Guard at the Division entrance that you are there to attend Safety training.**

For Reservations Email:

RailSafety@metro.net by 1pm the day prior to class or leave a message at (213) 617-6217.

SAFETY SHOES & SAFETY VESTS REQUIRED

LATE ARRIVALS WILL NOT BE ADMITTED!





Rail Safety & WWP – COVID Schedule

Crenshaw Yard – Division 16
5700 Arbor Vitae St.
Los Angeles, CA 90045
2nd Floor, Instruction Classroom

Enter parking lot at the guard shack

- **Rail Safety & WWP combo class is held Monday through Friday, Until Further Notice. Rail Safety begins at 7:00am and WWP begins at 9:00am.**

- **MUST be Rail Safety certified to take WWP training.**

Must have a reservation to attend class.
For Reservations Email RailSafety@metro.net by 1pm the day prior to class or leave a message at (213) 922-3228. Must have received an email to confirm reservations.

LATE ARRIVALS WILL NOT BE ADMITTED!



Enter the building through the first floor lobby, take elevator or stairs to the 2nd floor. Classroom is down the hall to the right.

APPENDIX VIII

FY 19-20 STREET IMPROVEMENT PROJECT
PROJECT SPECIFICATION NO. 2020-01 (002001)
IN THE CITY OF SOUTH PASADENA, CALIFORNIA

Metro Track Allocation Quick-Reference Sheet

Approved for use on June 7, 2023
294856.v3

Metro Track Allocation Quick-Reference Sheet

Updated 2023-04-12

Step 1) Access the Metro Track Allocation (TA) system: https://metrotrackallocation.azurewebsites.net/

Step 2) Create a profile:

a. Leave "Project Number," "Contract # / ROE," "Task Number," and "Radio Call Sign" blank.
b. Rail Operations will need to approve the profile before TA Request Forms can be submitted. (Allow up to 1 day)

Step 3) Complete the TA Request Form:

A) Select the Metro Rail Line nearest your project.

B) Confirm Contact Information. If changes are needed, access and edit your profile via the icon.

C) Select the work week, which starts on Sunday.

D) Select Start and End time (military time).

E) Select "X" for night work past midnight. Work will be cut-off at midnight if not selected.

F) Select "N/A" if no work falls within 6 ft of tracks.*

G) Select nearest Metro station from pulldown menu or type nearest intersection and click "Add New Item".

H) Select "No" for work falling 20ft outside the Metro Right-of-Way. Metro CM will advise on Power Down requirements based on the work.*

I) Enter crew size.

J) Use the Copy button to pull pre-fill information from the top bar down to other days. Adjust information as necessary for specific days. The "X" button will clear all information on a line.

K) Include the projects address, a short description of work, and work area restrictions.

L) List all equipment and cranes to be used.

M) Select "No Right of Way Access" if work does not require access to Metro property.*

N) Select "EIC" (Employee in Charge) under "Self Support" if work will not impact Metro operations.*

O) Select "General Support" under "Construction Management"

P) Click "Submit" when ready or click "Save" to keep form for future use.

*Metro CM will advise if other selections are required.

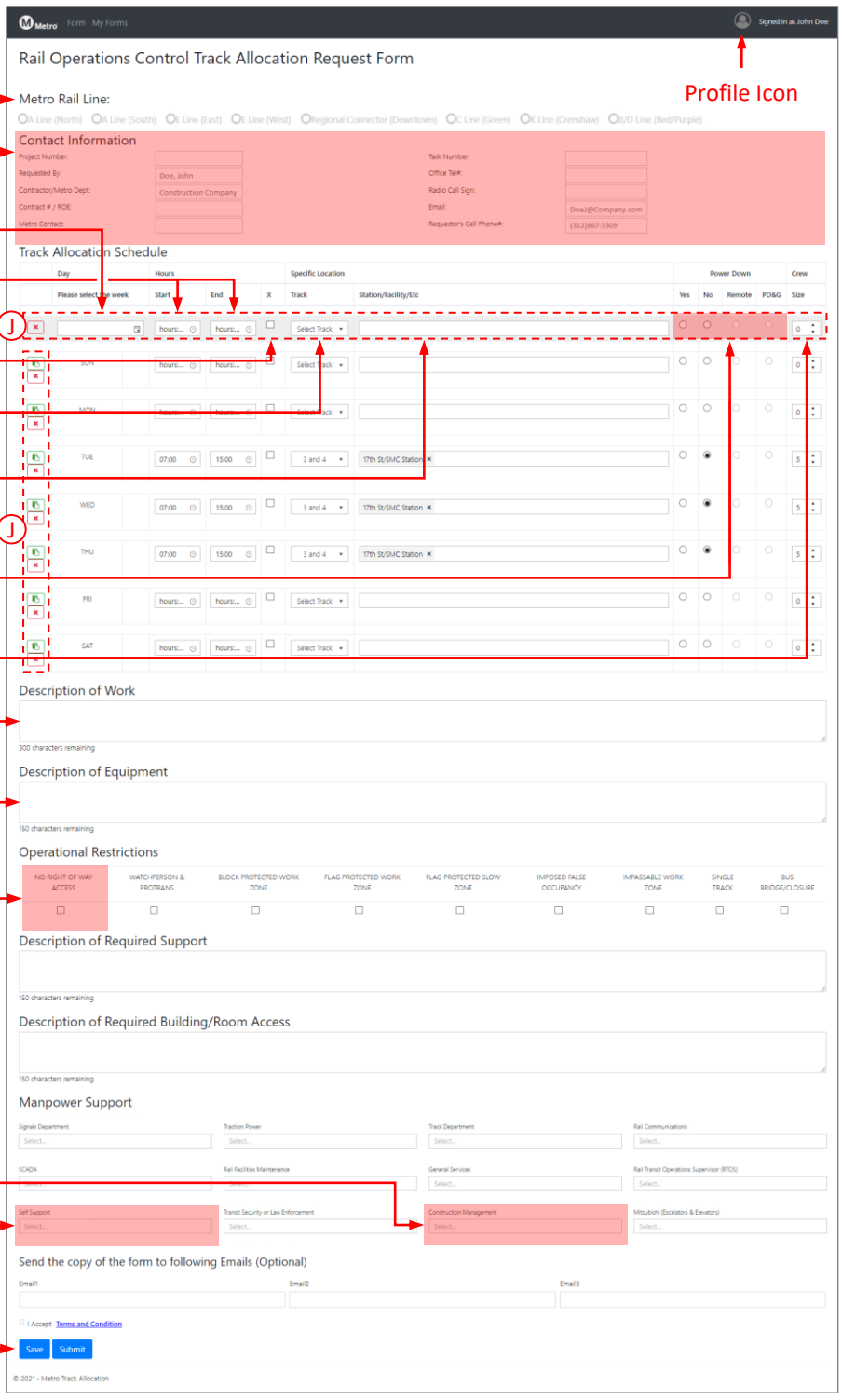

Step 4) Attend Tuesday TA meeting: A link to the virtual meeting will be sent to the requestor following submittal of the Form.

Notes:

TA Request Forms are due by 4pm on the Friday, nine (9) calendar days before the week of the proposed work.
TA Request Forms must be submitted 3 weeks prior to the week of the proposed work if single tracking or Power Down is required.
TA Request Forms may be submitted for up to four weeks in advance.
Work near Metro Division Yards use a similar but separate allocation process. Request a Yard Allocation Form to fill manually.

City Council Agenda Report

ITEM NO. 26

DATE: June 18, 2025

FROM: Todd Hileman, City Manager

PREPARED BY: Tina Lopez, Human Resources & Risk Manager

SUBJECT: **PUBLIC HEARING TO RECEIVE THE ANNUAL REPORT ON WORKFORCE VACANCIES, RECRUITMENT AND RETENTION IN COMPLIANCE WITH ASSEMBLY BILL 2561**

Recommendation

It is recommend that the City Council open the public hearing and receive and file the annual report.

Executive Summary

On September 22, 2024, Governor Newsom signed Assembly Bill 2561 (AB2561) into law to amend the Meyers-Millias-Brown Act (MMBA). AB 2561 added California Government Code Section 3502.3 (GB3502.3), which mandates that public agencies hold at least one public hearing each fiscal year prior to the adoption of their respective budgets to report on vacancy levels, recruitments, and retention efforts, and allow for participation by recognized bargaining units.

In accordance with AB 2561, the City shall hold a public hearing each fiscal year to present information on vacancies, recruitment, and retention efforts. Staff presents this report in compliance with new transparency requirements related to staffing vacancies. The purpose is to ensure transparency, accountability, and responsiveness to community needs regarding the City's staffing and employment practices.

Background

On September 22, 2024, Governor Newsom signed AB 2561 into law to amend the MMBA. AB 2561 added GC 3502.3, which mandates that public agencies hold at least one public hearing each fiscal year prior to the adoption of their respective budgets to report on vacancy levels, recruitment, and retention efforts, and allow for participation by recognized bargaining units. During these public meetings, employee bargaining units are entitled to present their perspectives on the report. If the vacancy rate in a bargaining unit is at or exceeds 20%, bargaining units may request that the agency provide additional information on the number of vacancies, such as applicant numbers for vacant positions, hiring timelines, and efforts to improve compensation, benefits, and working conditions.

AB 2561 requires public agencies to:

- Report annually on vacancies, recruitment activity, retention strategies.
- Identify any policies or practices that may hinder hiring or retention.
- Provide recognized bargaining units with an opportunity to present during the public

hearing; and
- Upon request by a recognized bargaining unit with a vacancy rate of 20% or more, provide additional data, including applicant volume, hiring timelines, and efforts to improve compensation, benefits, and working conditions.

The City recognizes three bargaining units which include the South Pasadena Firefighters' Association (FFA), South Pasadena Police Officers' Association (POA), and South Pasadena Public Service Employees' Association (PSEA). The City notified the units about the Public Hearing on June 11, 2025, and invited them to participate in accordance with AB2561.

Analysis
As of June 10, 2025, the City has 173 full-time budgeted positions and a vacancy rate of approximately 16.8% citywide. The vacancy rate of approximately 16.8% citywide. The vacancy rate for FFA is 15.8%, the vacancy rate for POA is 10% and the vacancy rate for PSEA is 16.2%. Vacancies arise form a range of factors, including retirements, internal/external promotions, resignations, and separations. The percentages discussed above translate to an absolute value of 29 total vacancies throughout the organization as of June 10, 2025.

Table 1: Vacancies per Unit (as of June 10, 2025)

Employee Unit	**# of Vacancies**	**# of Budgeted FTEs**	**% of Vacancies**
South Pasadena Unrepresented Management	9	30	30%
South Pasadena Firefighters Association	3	19	15.8%
South Pasadena Police Officers Association	5	50	10%
South Pasadena Public Service Employees Association	12	74	16.2%
FULL-TIME CITYWIDE VACANCIES	**29**	**173**	**16.8%**

Recruitment Efforts:
The City is continuously and rigorously recruiting and onboarding new hires, including full-time and part-time personnel. In FY2024-25, the City hired 26 new full-time employees Although AB 2561 requires local agencies to present annually on the status of vacancies and efforts to recruit and retain staff, the City has always prioritized recruitments to fill vacancies, and retention efforts to minimize turnover. Table 2 below provides information regarding the number of applicants, recruitments, and hires for FY2024-25 through June 10, 2025.

Table 2: Total Number of Full-time Recruitments (Citywide) FY2024-25 (as of June 10, 2025)

Year	**# of Applicants**	**# of Full-time Recruitments**	**# of Full-time Hires**
FY2024-25	2141	42	26

The City recognizes that recruitment is about identifying, attracting, and hiring the right people for the organization, and retention is about keeping employees engaged, satisfied, and committed to the organization in the long term. Both efforts are critical for the organization's

success, especially in today's competitive job market.

AB 2561 acknowledges that recruitment and retention is currently a challenge for all public sector employers in California. In this regard, the City experiences similar challenges with respect to its recruitments efforts since it is competing for a limited pool of qualified candidates among other cities within the region. As discussed in further detail below, the City Council has taken proactive measures to support the City's Human Resources Division by enhancing compensation levels, benefits, and supporting initiatives that enhance a better work-life balance for employees.

Retention Efforts:
Employee retention remains a central focus of the City's workforce strategy. In FY 2024-25, the City implemented several initiatives designed to improve employee satisfaction. The City implemented the following retention efforts:

- Conducted a citywide classification and compensation study.
- Approved a side Letter of Agreement with POA and FFA.
- Employee Engagement Committee planned year-round employee engagement and activities.
- Employee Recognition Programs including Years of Service.
- Continued to offer training and development opportunities through Liebert Cassidy Whitmore (LCW), and industry specific professional organizations.

As part of the City's workforce planning and in alignment with AB 2561, the City continues to assess internal practices and workforce conditions to identify and address recruitment and retention efforts. This ongoing self-assessment helps support organizational resilience and ensures effective delivery of public services.

The City is committed to maintaining a skilled and resilient workforce and complying with the requirements of AB 2561. After the Public Hearing process, staff recommends that the City Council receive and file the first of these annual updates. The City will continue to monitor staffing trends, address recruitment challenges, and invest in staff development and employee engagement.

Fiscal Impact
There is no direct fiscal impact associated with conducting the public hearing required under Government Code Section 3502.3.

Key Performance Indicators and Strategic Plan
These items align with City Council's priority 5, to work with the City Manager and establish improved operational efficiencies.

City Council Agenda Report

ITEM NO. 27

DATE: June 18, 2025

FROM: Todd Hileman, City Manager

PREPARED BY: Tina Lopez, Human Resources & Risk Manager

SUBJECT: **CONSIDERATION OF RESOLUTIONS APPROVING A LETTER OF AGREEMENT BETWEEN THE CITY OF SOUTH PASADENA AND THE SOUTH PASADENA FIREFIGHTERS' ASSOCIATION; APPROVING A LETTER BETWEEN THE CITY OF SOUTH PASADENA AND THE SOUTH PASADENA POLICE OFFICERS' ASSOCIATION; APPROVING A LETTER BETWEEN THE CITY OF SOUTH PASADENA AND THE PUBLIC SERVICE EMPLOYEES' ASSOCIATION; APPROVING A LETTER BETWEEN THE CITY OF SOUTH PASADENA AND THE PART-TIME PUBLIC SERVICE EMPLOYEES' ASSOCIATION; AND APPROVING A LETTER OF AGREEMENT BETWEEN THE CITY OF SOUTH PASADENA AND UNREPRESENTED MANAGEMENT GROUP**

Recommendation

It is recommended that the City Council consider:

1. Authorize an extension of the current Memorandum of Understanding (MOU) and Benefits Summary for the following five (5) employee groups: South Pasadena Firefighters' Association, South Pasadena Police Officers' Association, South Pasadena Public Service Employees' Association, South Pasadena Part-Time Public Service Employees' Association and Unrepresented Management from June 30, 2025 to December 31, 2025;
2. Approve a 2% salary increase for the identified employee groups, effective July 1, 2025;
3. Adopt the Resolutions approving the side Letter of Agreements between the City and the identified employee groups; and
4. Authorize the City Manager to execute the Letters of Agreement.

Executive Summary

This staff report is recommending the extension of the current Memorandum of Understanding (MOU) and Benefits Summary for five (5) employee groups from July 1, 2025 to December 31, 2025. This proposed six-month extension will allow additional time to prepare for negotiations and align with broader organization planning efforts.

As part of the extension, staff is also proposing a 2% salary increase for these employee groups, effective July 1, 2025. This adjustment reflects the City's commitment to fair and competitive compensation, supports employee retention, and acknowledges the continued service of City staff.

Extending the MOUs and Benefits Summary and implementing the salary adjustment will help maintain consistency in operations and labor relations while ensuring adequate time for thoughtful preparation to successor agreements.

Background
The City's current MOUs with the South Pasadena Firefighters' Association, South Pasadena Police Officers' Association, South Pasadena Public Service Employees' Association, South Pasadena Part-Time Public Service Employees' Association, and Benefits Summary with Unrepresented Management are set to expire on June 30, 2025. To provide adequate time to prepare for negotiations of successor agreements and to allow for a more comprehensive review of compensation and benefits, staff is proposing a six-month extension of the current MOUs and Benefits Summary through December 31, 2025.

In recognition of the continued service and contributions of these employee groups, and in alignment with the City's commitment to fair and competitive compensation, staff is also recommending a 2% salary adjustment effective July 1, 2025.

Analysis
Extending the MOUs and Benefits Summary offers a strategic opportunity to maintain organizational stability while addressing ongoing operational and budgetary priorities. As the organization continues to navigate a dynamic labor market and implements key initiatives such as the classification and compensation study, a measured extension of labor agreements ensures alignment between workforce planning and fiscal goals. The following points outline the key benefits to this approach:

- Maintains labor stability and continuity during the extended term.
- Aligns with fiscal planning and budget development timelines.
- Provides flexibility to complete the classification and compensation study implementation.

Additionally, the 2% salary increase acknowledges the impact of inflation and market trends, supports employee retention, and helps ensure that salaries remain competitive with comparable agencies. The proposed MOU and Benefits Summary extension and salary adjustment represent a balanced approach to maintaining positive labor relations, supporting staff retention and ensuring fiscal responsibility.

Alternatives
Possible alternative to staff's recommendation include:
1. Decline to approve the side Letters of Agreement and Benefits Summary extension and salary adjustment.
2. Modify the proposed extension period or salary increase amount.
3. Provide direction to staff to return with alternative proposals.

Fiscal Impact
The estimated fiscal impact of the 2% salary adjustment across the five (5) employee groups for the six-month extension period (July 1 to December 31, 2025 is approximately $186,785, including salary and associated benefits. Funding for this adjustment will be incorporated into the FY2025-26 budget.

Key Performance Indicators and Strategic Plan
This item aligns with City Council's priority 5, to work with the City Manager and establish improved operational efficiencies.

Attachment:
Attachment No. 1 - Resolution FFA LOA
Exhibit B - FFA Salary Schedule
Attachment No. 2 - Resolution POA LOA
Exhibit B - POA Salary Schedule
Attachment No. 3 - Resolution PSEA LOA
Exhibit B - PSEA Salary Schedule
Attachment No. 4 - Resolution PT-PSEA LOA
Exhibit B - PT - PSEA Salary Schedule
Attachment No. 5 - Resolution Un Represented Mgmt LOA
Exhibit B - UnREP Salary Schedule

RESOLUTION NO. __

A RESOLUTION OF THE CITY COUNCIL OF THE CITY OF SOUTH PASADENA, CALIFORNIA APPROVING A SIDE LETTER OF AGREEMENT BETWEEN THE CITY OF SOUTH PASADENA AND THE SOUTH PASADENA FIREFIGHTERS' ASSOCIATION AMENDING SECTION 1(D) AND SECTION 4(B) OF THE EXISTING MEMORANDUM OF UNDERSTANDING AND APPROVING THE SALARY SCHEDULE FOR FISCAL YEAR 2025-26

WHEREAS, the current Memorandum of Agreement (MOU) between the City and the South Pasadena Firefighters' Association (FFA) was executed on June 15, 2022, for a term from July 1, 2022 to June 30, 2025;

WHEREAS, the City Council now desires to amend Section 1(d) Term of Agreement, to extend the term to December 31, 2025, and Section 4(b) Salary Schedule Adjustment, to reflect a 2% increase effective July 1, 2025;

WHEREAS, the City met and conferred with the FFA to discuss the terms and conditions of the proposed amendments; and

WHEREAS, the City and the FFA have agreed to the terms included in the attached Letter of Agreement, attached hereto as "Exhibit A."

WHEREAS, the City would like to approve the FFA's Salary Schedule for Fiscal Year 2025-26, in accordance with Title 2 of the California Code of Regulations Section 570.5 and the California Public Employees Retirement System (CalPERS), attached hereto as "Exhibit B".

NOW, THEREFORE, THE CITY COUNCIL OF THE CITY OF SOUTH PASADENA, CALIFORNIA, DOES RESOLVE, DECLARE, DETERMINE AND ORDER AS FOLLOWS:

SECTION 1. The Letter of Agreement (LOA) between the City of South Pasadena and the South Pasadena Firefighters' Association, attached as Exhibit A, is hereby approved and adopted by the City Council of the City of South Pasadena.

SECTION 2. By adopting this Resolution, Section 1(d) and Section 4(b) of Resolution 7776, which represents the Memorandum of Understanding between the City and the South Pasadena Firefighters' Association, is being amended in the manner set forth in the attached LOA, Exhibit A.

SECTION 3. The City Council authorizes the City Manager, or designee, to execute the referenced Side Letter of Agreement on behalf of the City of South Pasadena.

SECTION 4: The Salary Schedule for POA as set forth in Exhibit B, in accordance with Title 2 of the California Code of Regulations Section 570.5 and the California Public Employees Retirement System (CalPERS), is hereby adopted.

SECTION 5. The City Clerk of the City of South Pasadena shall certify to the passage and adoption of this resolution and its approval by the City Council and shall cause the same to be listed in the records of the City.

PASSED, APPROVED AND ADOPTED on this 18th day of June 2025.

Janet Braun, Mayor

ATTEST:

Hector Gomez, Chief City Clerk

APPROVED AS TO FORM:

Roxanne Diaz, City Attorney

I HEREBY CERTIFY the foregoing resolution was duly adopted by the City Council of the City of South Pasadena, California, at a regular meeting held on the 18th day of June 2025, by the following vote:

AYES:

NOES:

ABSENT:

ABSTAINED:

Hector Gomez, Chief City Clerk

EXHIBIT A

LETTER OF AGREMEENT

AGREEMENT TO EXTEND THE MEMORANDUM OF UNDERSTANDING BETWEEN
THE CITY OF SOUTH PASADENA AND
THE SOUTH PASADENA FIREFIGHTERS' ASSOCIATION

WHEREAS, the City of South Pasadena and the South Pasadena Firefighters' Association ("FFA") have initiated meet and confer negotiations regarding a successor Memorandum of
Understanding ("MOU") to the MOU that is set to expire on June 30, 2025; and

WHEREAS, the City and FFA desire to extend the MOU by six months.

THEREFORE, the Parties agree as follows:

1. The 2022 to 2025 MOU is extended to December 31, 2025.

2. Employees in the FFA bargaining unit shall be provided a two percent (2%) general wage increase effective July 1, 2025.

3. The FFA further agrees that the benefits that were modified under the December 19, 2024 Letter of Agreement are not subject to bargaining as this extension does not constitute the 2025 Successor MOU Negotiations

4. Nothing in this Agreement waives FFA's right, in successor negotiations, to propose a wage increase that would be retroactive to July 1, 2025. FFA acknowledges that the City has not agreed and has no obligation to provide any such retroactive wage increase.

IT IS SO AGREED

FOR THE SOUTH PASADENA FIREFIGHTERS ASSOCIATION:

_____
ANTHONY PORRAZ
Chief Negotiator, South Pasadena Firefighters Association

FOR THE CITY OF SOUTH PASADENA:

_____
L. TODD HILEMAN
City Manager

EXHIBIT B

FFA SALARY SCHEDULE

CITY OF SOUTH PASADENA
FIREFIGHTERS' ASSOCIATION
SALARY SCHEDULE
Effective July 1, 2025

Amounts shown are annual, monthly, and hourly equivalents.

POSITION TITLE	STEP A	STEP B	STEP C	STEP D	STEP E	STEP F
FIRE CAPTAIN	$ 113,856	$ 119,544	$ 125,520	$ 131,796	$ 138,384	
	$ 9,488	$ 9,962	$ 10,460	$ 10,983	$ 11,532	
	$ 39.10	$ 41.05	$ 43.10	$ 45.26	$ 47.52	
FIREFIGHTER/PARAMEDIC	$ 98,100	$ 103,008	$ 108,156	$ 113,568	$ 119,244	
	$ 8,175	$ 8,584	$ 9,013	$ 9,464	$ 9,937	
	$ 33.69	$ 35.37	$ 37.14	$ 39.00	$ 40.95	
FIRE ENGINEER	$ 93,780	$ 98,472	$ 103,392	$ 108,564	$ 113,988	$ 119,688
	$ 7,815	$ 8,206	$ 8,616	$ 9,047	$ 9,499	$ 9,974
	$ 32.20	$ 33.82	$ 35.51	$ 37.28	$ 39.14	$ 41.10
FIREFIGHTER	$ 74,424	$ 78,144	$ 82,056	$ 86,160	$ 90,468	
	$ 6,202	$ 6,512	$ 6,838	$ 7,180	$ 7,539	
	$ 25.56	$ 26.84	$ 28.18	$ 29.59	$ 31.07	
FIRE INSPECTOR	$ 80,724	$ 84,756	$ 88,992	$ 93,444	$ 98,112	
	$ 6,727	$ 7,063	$ 7,416	$ 7,787	$ 8,176	
	$ 38.81	$ 40.75	$ 42.78	$ 44.93	$ 47.17	

Actual salary may differ due to rounding.

RESOLUTION NO. __

A RESOLUTION OF THE CITY COUNCIL OF THE CITY OF SOUTH PASADENA, CALIFORNIA APPROVING A SIDE LETTER OF AGREEMENT BETWEEN THE CITY OF SOUTH PASADENA AND THE SOUTH PASADENA POLICE OFFICERS' ASSOCIATION AMENDING THE TERM AND SECTION 5(A)OF THE MEMORANDUM OF AGREEMENT AND APPROVING THE SALARY SCHEDULE FOR FISCAL YEAR 2025-26

WHEREAS, the current Memorandum of Agreement (MOU) between the City and the South Pasadena Police Officers' Association (POA) was executed on June 15, 2022, for a term from July 1, 2022 to June 30, 2025; and

WHEREAS, the City Council now desires to amend the Term of the MOU and extend to December 31, 2025, and Section 5(a) Salary Schedule Adjustments to reflect a 2% increase effective July 1, 2025; and

WHEREAS, the City met and conferred with the POA to discuss the terms and conditions of the proposed amendments; and

WHEREAS, the City and the POA have agreed to the terms included in the attached Letter of Agreement, attached hereto as "Exhibit A."

WHEREAS, the City would like to approve the POA's Salary Schedule for Fiscal Year 2025-26, in accordance with Title 2 of the California Code of Regulations Section 570.5 and the California Public Employees Retirement System (CalPERS), attached hereto as "Exhibit B".

NOW, THEREFORE, THE CITY COUNCIL OF THE CITY OF SOUTH PASADENA, CALIFORNIA, DOES RESOLVE, DECLARE, DETERMINE AND ORDER AS FOLLOWS:

SECTION 1. The Letter of Agreement (LOA) between the City of South Pasadena and the South Pasadena Police Officers' Association, attached as Exhibit A, is hereby approved and adopted by the City Council of the City of South Pasadena.

SECTION 2. By adopting this Resolution, the Term and Section 5(a) of Resolution 7773, which represents the Memorandum of Understanding between the City and the South Pasadena Police Officers' Association, is being amended in the manner set forth in the attached LOA, Exhibit A.

SECTION 3. The City Council authorizes the City Manager, or designee, to execute the referenced Side Letter of Agreement on behalf of the City of South Pasadena.

SECTION 4: The Salary Schedule for POA as set forth in Exhibit B, in accordance with Title 2 of the California Code of Regulations Section 570.5 and the California Public Employees Retirement System (CalPERS), is hereby adopted.

SECTION 5. The City Clerk of the City of South Pasadena shall certify to the passage and adoption of this resolution and its approval by the City Council and shall cause the same to be listed in the records of the City.

PASSED, APPROVED AND ADOPTED on this 18th day of June 2025.

Janet Braun, Mayor

ATTEST:

Hector Gomez, Chief City Clerk

APPROVED AS TO FORM:

Roxanne Diaz, City Attorney

I HEREBY CERTIFY the foregoing resolution was duly adopted by the City Council of the City of South Pasadena, California, at a regular meeting held on the 18th day of June 2025, by the following vote:

AYES:

NOES:

ABSENT:

ABSTAINED:

Hector Gomez, Chief City Clerk

EXHIBIT A

LETTER OF AGREEMENT

AGREEMENT TO EXTEND THE MEMORANDUM OF UNDERSTANDING BETWEEN
THE CITY OF SOUTH PASADENA AND
THE SOUTH PASADENA POLICE OFFICERS' ASSOCIATION

WHEREAS, the City of South Pasadena and the South Pasadena Police Officers' Association ("POA") have initiated meet and confer negotiations regarding a successor Memorandum of Understanding ("MOU") to the MOU that is set to expire on June 30, 2025; and

WHEREAS, the City and POA desire to extend the MOU by six months.

THEREFORE, the Parties agree as follows:

1. The 2022 to 2025 MOU is extended to December 31, 2025.

2. Employees in the POA bargaining unit shall be provided a two percent (2%) general wage increase effective July 1, 2025.

3. The POA further agrees that the benefits that were modified under the September 10, 2024 Letter of Agreement are not subject to bargaining as this extension does not constitute the 2025 Successor MOU Negotiations.

IT IS SO AGREED

FOR THE POLICE OFFICERS ASSOCIATION:

_____
TIMOTHY KIM
Chief Negotiator, South Pasadena Police Officers' Association

FOR THE CITY OF SOUTH PASADENA:

_____
L. TODD HILEMAN
City Manager

EXHIBIT B

POA SALARY SCHEDULE

CITY OF SOUTH PASADENA
POLICE OFFICERS' ASSOCIATION
SALARY SCHEDULE
Effective July 1, 2025

SWORN

Amounts shown are annual, monthly, and hourly equivalents.

POSITION TITLE	STEP A	STEP B	STEP C	STEP D	STEP E
POLICE SERGEANT	$ 118,104	$ 124,008	$ 130,212	$ 136,728	$ 143,568
	$ 9,842	$ 10,334	$ 10,851	$ 11,394	$ 11,964
	$ 56.78	$ 59.62	$ 62.60	$ 65.73	$ 69.02
POLICE CORPORAL	$ 98,424	$ 103,344	$ 108,516	$ 113,940	$ 119,640
	$ 8,202	$ 8,612	$ 9,043	$ 9,495	$ 9,970
	$ 47.32	$ 49.68	$ 52.17	$ 54.78	$ 57.52
POLICE OFFICER	$ 89,472	$ 93,948	$ 98,640	$ 103,572	$ 108,756
	$ 7,456	$ 7,829	$ 8,220	$ 8,631	$ 9,063
	$ 43.02	$ 45.17	$ 47.42	$ 49.79	$ 52.29

NON-SWORN

Amounts shown are annual, monthly, and hourly equivalents.

POSITION TITLE	STEP A	STEP B	STEP C	STEP D	STEP E
POLICE OFFICER RECRUIT	$ 86,100	$ 90,408	$ 94,932	$ 99,684	$ 104,664
	$ 7,175	$ 7,534	$ 7,911	$ 8,307	$ 8,722
	$ 41.39	$ 43.47	$ 45.64	$ 47.93	$ 50.32
POLICE ASSISTANT	$ 60,264	$ 63,276	$ 66,444	$ 69,768	$ 73,260
	$ 5,022	$ 5,273	$ 5,537	$ 5,814	$ 6,105
	$ 28.97	$ 30.42	$ 31.94	$ 33.54	$ 35.22
POLICE ASSISTANT II	$ 66,300	$ 69,612	$ 73,092	$ 76,752	$ 80,592
	$ 5,525	$ 5,801	$ 6,091	$ 6,396	$ 6,716
	$ 31.88	$ 33.47	$ 35.14	$ 36.90	$ 38.75
POLICE CLERK I	$ 42,780	$ 44,916	$ 47,160	$ 49,524	$ 51,996
	$ 3,565	$ 3,743	$ 3,930	$ 4,127	$ 4,333
	$ 20.57	$ 21.59	$ 22.67	$ 23.81	$ 25.00

POSITION TITLE	STEP A	STEP B	STEP C	STEP D	STEP E
POLICE CLERK II	$ 49,056	$ 51,504	$ 54,084	$ 56,784	$ 59,628
	$ 4,088	$ 4,292	$ 4,507	$ 4,732	$ 4,969
	$ 23.58	$ 24.76	$ 26.00	$ 27.30	$ 28.67
PARKING CONTROL OFFICER	$ 52,440	$ 55,068	$ 57,816	$ 60,708	$ 63,744
	$ 4,370	$ 4,589	$ 4,818	$ 5,059	$ 5,312
	$ 25.21	$ 26.48	$ 27.80	$ 29.19	$ 30.65
SENIOR CLERK	$ 64,416	$ 67,632	$ 71,016	$ 74,568	$ 78,300
	$ 5,368	$ 5,636	$ 5,918	$ 6,214	$ 6,525
	$ 30.97	$ 32.52	$ 34.14	$ 35.85	$ 37.64

Actual salary may differ due to rounding.

RESOLUTION NO. __

A RESOLUTION OF THE CITY COUNCIL OF THE CITY OF SOUTH PASADENA, CALIFORNIA APPROVING A SIDE LETTER OF AGREEMENT BETWEEN THE CITY OF SOUTH PASADENA AND THE SOUTH PASADENA PUBLIC SERVICE EMPLOYEES' ASSOCIATION AMENDING SECTION 1(C) AND SECTION 6(B) OF THE EXISTING MEMORANDUM OF UNDERSTANDING AND APPROVING THE SALARY SCHEDULE FOR FISCAL YEAR 2025-26

WHEREAS, the current Memorandum of Agreement (MOU) between the City and the South Pasadena Public Service Employees' Association (PSEA) was executed on June 15, 2022, for a term from July 1, 2022 to June 30, 2025;

WHEREAS, the City Council now desires to amend Section 1(c) Term of Agreement to extend to December 31, 2025, and Section 6(b) Salary Schedules, to reflect a 2% increase effective July 1, 2025;

WHEREAS, the City met and conferred with the PSEA to discuss the terms and conditions of the proposed amendments; and

WHEREAS, the City and the PSEA have agreed to the terms included in the attached Letter of Agreement, attached hereto as "Exhibit A."

WHEREAS, the City would like to approve PSEA's Salary Schedule for Fiscal Year 2025-26, in accordance with Title 2 of the California Code of Regulations Section 570.5 and the California Public Employees Retirement System (CalPERS), attached hereto as "Exhibit B".

NOW, THEREFORE, THE CITY COUNCIL OF THE CITY OF SOUTH PASADENA, CALIFORNIA, DOES RESOLVE, DECLARE, DETERMINE AND ORDER AS FOLLOWS:

SECTION 1. The Letter of Agreement (LOA) between the City of South Pasadena and the South Pasadena Public Service Employees' Association, attached as Exhibit A, is hereby approved and adopted by the City Council of the City of South Pasadena.

SECTION 2. By adopting this Resolution, Section 1(c) and 6(b) of Resolution 7774, which represents the Memorandum of Understanding between the City and the South Pasadena Public Service Employees' Association, is being amended in the manner set forth in the attached LOA, Exhibit A.

SECTION 3. The City Council authorizes the City Manager, or designee, to execute the referenced Side Letter of Agreement on behalf of the City of South Pasadena.

SECTION 4: The Salary Schedule for PSEA as set forth in Exhibit B, in accordance with Title 2 of the California Code of Regulations Section 570.5 and the California Public Employees Retirement System (CalPERS), is hereby adopted.

SECTION 5. The City Clerk of the City of South Pasadena shall certify to the passage and adoption of this resolution and its approval by the City Council and shall cause the same to be listed in the records of the City.

PASSED, APPROVED AND ADOPTED on this 18th day of June 2025.

Janet Braun, Mayor

ATTEST:

Hector Gomez, Chief City Clerk

APPROVED AS TO FORM:

Roxanne Diaz, City Attorney

I HEREBY CERTIFY the foregoing resolution was duly adopted by the City Council of the City of South Pasadena, California, at a regular meeting held on the 18th day of June 2025, by the following vote:

AYES:

NOES:

ABSENT:

ABSTAINED:

Hector Gomez, Chief City Cler

EXHIBIT A

LETTER OF AGREMEENT

AGREEMENT TO EXTEND THE MEMORANDUM OF UNDERSTANDING BETWEEN
THE CITY OF SOUTH PASADENA AND
THE PUBLIC SERVICE EMPLOYEES' ASSOCIATION

WHEREAS, the City of South Pasadena and the Public Service Employees' Association (PSEA) have initiated meet and confer negotiations regarding a successor Memorandum of Understanding ("MOU") to the MOU that is set to expire on June 30, 2025; and

WHEREAS, the City and PSEA desire to extend the MOU by six months.

THEREFORE, the Parties agree as follows:

1. The 2022 to 2025 MOU is extended to December 31, 2025.

2. Employees in the PSEA bargaining unit shall be provided a two percent (2%) general wage increase effective July 1, 2025.

IT IS SO AGREED

FOR THE PUBLIC SERVICE EMPLOYEES' ASSOCIATION:

_____
EDGAR VILLALOBOS
Chief Negotiator, Public Service Employees' Association

FOR THE CITY OF SOUTH PASADENA:

_____
L. TODD HILEMAN
City Manager

EXHIBIT B

PSEA SALARY SCHEDULE

CITY OF SOUTH PASADENA
PUBLIC SERVICE EMPLOYEES' ASSOCIATION
SALARY SCHEDULE
Effective July 1, 2025

Amounts shown are annual, monthly, and hourly equivalents.

POSITION TITLE	STEP A	STEP B	STEP C	STEP D	STEP E
ACCOUNT CLERK	$ 47,604	$ 49,980	$ 52,476	$ 55,104	$ 57,864
	$ 3,967	$ 4,165	$ 4,373	$ 4,592	$ 4,822
	$ 22.89	$ 24.03	$ 25.23	$ 26.49	$ 27.82
ACCOUNTANT	$ 71,700	$ 75,288	$ 79,056	$ 83,004	$ 87,156
	$ 5,975	$ 6,274	$ 6,588	$ 6,917	$ 7,263
	$ 34.47	$ 36.20	$ 38.01	$ 39.91	$ 41.90
ACCOUNTING TECHNICIAN I	$ 53,808	$ 56,496	$ 59,316	$ 62,280	$ 65,400
	$ 4,484	$ 4,708	$ 4,943	$ 5,190	$ 5,450
	$ 25.87	$ 27.16	$ 28.52	$ 29.94	$ 31.44
ACCOUNTING TECHNICIAN II	$ 59,748	$ 62,736	$ 65,868	$ 69,156	$ 72,612
	$ 4,979	$ 5,228	$ 5,489	$ 5,763	$ 6,051
	$ 28.73	$ 30.16	$ 31.67	$ 33.25	$ 34.91
ADMINISTRATIVE SECRETARY	$ 58,152	$ 61,056	$ 64,104	$ 67,308	$ 70,668
	$ 4,846	$ 5,088	$ 5,342	$ 5,609	$ 5,889
	$ 27.96	$ 29.35	$ 30.82	$ 32.36	$ 33.98
ASSISTANT PLANNER	$ 71,700	$ 75,288	$ 79,056	$ 83,004	$ 87,156
	$ 5,975	$ 6,274	$ 6,588	$ 6,917	$ 7,263
	$ 34.47	$ 36.20	$ 38.01	$ 39.91	$ 41.90
ASSOCIATE CIVIL ENGINEER	$ 100,188	$ 105,192	$ 110,448	$ 115,968	$ 121,764
	$ 8,349	$ 8,766	$ 9,204	$ 9,664	$ 10,147
	$ 48.17	$ 50.57	$ 53.10	$ 55.75	$ 58.54
ASSOCIATE PLANNER	$ 79,512	$ 83,484	$ 87,660	$ 92,040	$ 96,648
	$ 6,626	$ 6,957	$ 7,305	$ 7,670	$ 8,054
	$ 38.23	$ 40.14	$ 42.14	$ 44.25	$ 46.47
BUILDING MAINTENANCE WORKER	$ 60,864	$ 63,912	$ 67,104	$ 70,464	$ 73,992
	$ 5,072	$ 5,326	$ 5,592	$ 5,872	$ 6,166
	$ 29.26	$ 30.73	$ 32.26	$ 33.88	$ 35.57

POSITION TITLE	STEP A	STEP B	STEP C	STEP D	STEP E
CIP ANALYST	$ 86,964	$ 91,308	$ 95,868	$ 100,656	$ 105,684
	$ 7,247	$ 7,609	$ 7,989	$ 8,388	$ 8,807
	$ 41.81	$ 43.90	$ 46.09	$ 48.39	$ 50.81
CIP PROJECT MANAGER	$ 102,756	$ 107,892	$ 113,292	$ 118,956	$ 124,908
	$ 8,563	$ 8,991	$ 9,441	$ 9,913	$ 10,409
	$ 49.40	$ 51.87	$ 54.47	$ 57.19	$ 60.05
CIVIL ENGINEERING ASSISTANT	$ 81,276	$ 85,344	$ 89,616	$ 94,092	$ 98,796
	$ 6,773	$ 7,112	$ 7,468	$ 7,841	$ 8,233
	$ 39.08	$ 41.03	$ 43.08	$ 45.24	$ 47.50
COMMUNITY IMPROVEMENT COORDINATOR	$ 62,292	$ 65,412	$ 68,688	$ 72,120	$ 75,732
	$ 5,191	$ 5,451	$ 5,724	$ 6,010	$ 6,311
	$ 29.95	$ 31.45	$ 33.02	$ 34.67	$ 36.41
COMMUNITY SERVICES COORDINATOR	$ 63,792	$ 66,984	$ 70,332	$ 73,848	$ 77,544
	$ 5,316	$ 5,582	$ 5,861	$ 6,154	$ 6,462
	$ 30.67	$ 32.20	$ 33.81	$ 35.50	$ 37.28
DEPUTY CITY CLERK	$ 71,700	$ 75,288	$ 79,056	$ 83,004	$ 87,156
	$ 5,975	$ 6,274	$ 6,588	$ 6,917	$ 7,263
	$ 34.47	$ 36.20	$ 38.01	$ 39.91	$ 41.90
ELECTRICIAN	$ 67,188	$ 70,548	$ 74,076	$ 77,784	$ 81,672
	$ 5,599	$ 5,879	$ 6,173	$ 6,482	$ 6,806
	$ 32.30	$ 33.92	$ 35.61	$ 37.40	$ 39.27
FACILITIES AND PARKS SUPERVISOR	$ 86,964	$ 91,308	$ 95,868	$ 100,656	$ 105,684
	$ 7,247	$ 7,609	$ 7,989	$ 8,388	$ 8,807
	$ 41.81	$ 43.90	$ 46.09	$ 48.39	$ 50.81
FACILITIES MAINTENANCE SUPERVISOR	$ 82,056	$ 86,160	$ 90,468	$ 94,992	$ 99,744
	$ 6,838	$ 7,180	$ 7,539	$ 7,916	$ 8,312
	$ 39.45	$ 41.42	$ 43.49	$ 45.67	$ 47.95
FILM LIAISON	$ 63,792	$ 66,984	$ 70,332	$ 73,848	$ 77,544
	$ 5,316	$ 5,582	$ 5,861	$ 6,154	$ 6,462
	$ 30.67	$ 32.20	$ 33.81	$ 35.50	$ 37.28
GRANTS ANALYST	$ 75,216	$ 78,972	$ 82,920	$ 87,072	$ 91,428
	$ 6,268	$ 6,581	$ 6,910	$ 7,256	$ 7,619
	$ 36.16	$ 37.97	$ 39.87	$ 41.86	$ 43.96

POSITION TITLE	STEP A	STEP B	STEP C	STEP D	STEP E
HUMAN RESOURCES ANALYST	$ 75,216	$ 78,972	$ 82,920	$ 87,072	$ 91,428
	$ 6,268	$ 6,581	$ 6,910	$ 7,256	$ 7,619
	$ 36.16	$ 37.97	$ 39.87	$ 41.86	$ 43.96

POSITION TITLE	STEP A	STEP B	STEP C	STEP D	STEP E
LIBRARIAN	$ 70,872	$ 74,412	$ 78,132	$ 82,044	$ 86,148
	$ 5,906	$ 6,201	$ 6,511	$ 6,837	$ 7,179
	$ 34.07	$ 35.78	$ 37.56	$ 39.44	$ 41.42
LIBRARY ASSOCIATE	$ 56,568	$ 59,400	$ 62,376	$ 65,496	$ 68,772
	$ 4,714	$ 4,950	$ 5,198	$ 5,458	$ 5,731
	$ 27.20	$ 28.56	$ 29.99	$ 31.49	$ 33.06
LIBRARY CLERK I	$ 44,172	$ 46,380	$ 48,696	$ 51,132	$ 53,688
	$ 3,681	$ 3,865	$ 4,058	$ 4,261	$ 4,474
	$ 21.24	$ 22.30	$ 23.41	$ 24.58	$ 25.81
LIBRARY CLERK II	$ 48,276	$ 50,688	$ 53,220	$ 55,884	$ 58,680
	$ 4,023	$ 4,224	$ 4,435	$ 4,657	$ 4,890
	$ 23.21	$ 24.37	$ 25.59	$ 26.87	$ 28.21
LIBRARY DIGITAL SERVICES MANAGER	$ 71,700	$ 75,288	$ 79,056	$ 83,004	$ 87,156
	$ 5,975	$ 6,274	$ 6,588	$ 6,917	$ 7,263
	$ 34.47	$ 36.20	$ 38.01	$ 39.91	$ 41.90
LIBRARY PUBLIC SERVICES MANAGER	$ 96,396	$ 101,220	$ 106,284	$ 111,600	$ 117,180
	$ 8,033	$ 8,435	$ 8,857	$ 9,300	$ 9,765
	$ 46.34	$ 48.66	$ 51.10	$ 53.65	$ 56.34
LIBRARY SUPPORT SERVICES MANAGER	$ 96,396	$ 101,220	$ 106,284	$ 111,600	$ 117,180
	$ 8,033	$ 8,435	$ 8,857	$ 9,300	$ 9,765
	$ 46.34	$ 48.66	$ 51.10	$ 53.65	$ 56.34
LIBRARY TECHNICAL ASSISTANT	$ 57,732	$ 60,624	$ 63,660	$ 66,840	$ 70,188
	$ 4,811	$ 5,052	$ 5,305	$ 5,570	$ 5,849
	$ 27.76	$ 29.15	$ 30.61	$ 32.13	$ 33.74
MAINTENANCE WORKER I	$ 48,828	$ 51,264	$ 53,832	$ 56,520	$ 59,352
	$ 4,069	$ 4,272	$ 4,486	$ 4,710	$ 4,946
	$ 23.48	$ 24.65	$ 25.88	$ 27.17	$ 28.53
MAINTENANCE WORKER II	$ 53,172	$ 55,836	$ 58,632	$ 61,560	$ 64,644
	$ 4,431	$ 4,653	$ 4,886	$ 5,130	$ 5,387
	$ 25.56	$ 26.84	$ 28.19	$ 29.60	$ 31.08
MANAGEMENT AIDE	$ 58,152	$ 61,056	$ 64,104	$ 67,308	$ 70,668
	$ 4,846	$ 5,088	$ 5,342	$ 5,609	$ 5,889
	$ 27.96	$ 29.35	$ 30.82	$ 32.36	$ 33.98

POSITION TITLE	STEP A	STEP B	STEP C	STEP D	STEP E
MANAGEMENT ANALYST	$ 75,216	$ 78,972	$ 82,920	$ 87,072	$ 91,428
	$ 6,268	$ 6,581	$ 6,910	$ 7,256	$ 7,619
	$ 36.16	$ 37.97	$ 39.87	$ 41.86	$ 43.96
MANAGEMENT ASSISTANT	$ 63,792	$ 66,984	$ 70,332	$ 73,848	$ 77,544
	$ 5,316	$ 5,582	$ 5,861	$ 6,154	$ 6,462
	$ 30.67	$ 32.20	$ 33.81	$ 35.50	$ 37.28
PARKS SUPERVISOR	$ 77,232	$ 81,096	$ 85,152	$ 89,412	$ 93,888
	$ 6,436	$ 6,758	$ 7,096	$ 7,451	$ 7,824
	$ 37.13	$ 38.99	$ 40.94	$ 42.99	$ 45.14
PERMIT COUNTER TECHNICIAN	$ 53,280	$ 55,944	$ 58,740	$ 61,680	$ 64,764
	$ 4,440	$ 4,662	$ 4,895	$ 5,140	$ 5,397
	$ 25.62	$ 26.90	$ 28.24	$ 29.65	$ 31.14
PROGRAM SPECIALIST	$ 58,152	$ 61,056	$ 64,104	$ 67,308	$ 70,668
	$ 4,846	$ 5,088	$ 5,342	$ 5,609	$ 5,889
	$ 27.96	$ 29.35	$ 30.82	$ 32.36	$ 33.98
PUBLIC WORKS ASSISTANT	$ 74,640	$ 78,372	$ 82,296	$ 86,412	$ 90,732
	$ 6,220	$ 6,531	$ 6,858	$ 7,201	$ 7,561
	$ 35.88	$ 37.68	$ 39.57	$ 41.54	$ 43.62
PUBLIC WORKS INSPECTOR	$ 73,824	$ 77,520	$ 81,396	$ 85,464	$ 89,736
	$ 6,152	$ 6,460	$ 6,783	$ 7,122	$ 7,478
	$ 35.49	$ 37.27	$ 39.13	$ 41.09	$ 43.14
SENIOR ACCOUNTANT	$ 100,764	$ 105,804	$ 111,096	$ 116,652	$ 122,484
	$ 8,397	$ 8,817	$ 9,258	$ 9,721	$ 10,207
	$ 48.44	$ 50.87	$ 53.41	$ 56.08	$ 58.89
SENIOR COMMUNITY IMPROVEMENT COORDINATOR	$ 71,688	$ 75,276	$ 79,044	$ 82,992	$ 87,144
	$ 5,974	$ 6,273	$ 6,587	$ 6,916	$ 7,262
	$ 34.47	$ 36.19	$ 38.00	$ 39.90	$ 41.90
SENIOR ELECTRICIAN	$ 71,880	$ 75,480	$ 79,260	$ 83,220	$ 87,384
	$ 5,990	$ 6,290	$ 6,605	$ 6,935	$ 7,282
	$ 34.56	$ 36.29	$ 38.11	$ 40.01	$ 42.01
SENIOR MAINTENANCE WORKER	$ 63,372	$ 66,540	$ 69,864	$ 73,356	$ 77,028
	$ 5,281	$ 5,545	$ 5,822	$ 6,113	$ 6,419
	$ 30.47	$ 31.99	$ 33.59	$ 35.27	$ 37.03

POSITION TITLE	STEP A	STEP B	STEP C	STEP D	STEP E
SENIOR PLANNER	$ 100,764	$ 105,804	$ 111,096	$ 116,652	$ 122,484
	$ 8,397	$ 8,817	$ 9,258	$ 9,721	$ 10,207
	$ 48.44	$ 50.87	$ 53.41	$ 56.08	$ 58.89
SENIOR WATER PRODUCTION/TREATMENT OPERATOR	$ 64,248	$ 67,464	$ 70,836	$ 74,376	$ 78,096
	$ 5,354	$ 5,622	$ 5,903	$ 6,198	$ 6,508
	$ 30.89	$ 32.43	$ 34.06	$ 35.76	$ 37.55
SENIOR WATER UTILITY WORKER	$ 65,004	$ 68,256	$ 71,664	$ 75,252	$ 79,020
	$ 5,417	$ 5,688	$ 5,972	$ 6,271	$ 6,585
	$ 31.25	$ 32.82	$ 34.45	$ 36.18	$ 37.99
STREET SUPERVISOR	$ 78,072	$ 81,972	$ 86,076	$ 90,384	$ 94,908
	$ 6,506	$ 6,831	$ 7,173	$ 7,532	$ 7,909
	$ 37.53	$ 39.41	$ 41.38	$ 43.45	$ 45.63
TRANSPORTATION DRIVER	$ 44,172	$ 46,380	$ 48,696	$ 51,132	$ 53,688
	$ 3,681	$ 3,865	$ 4,058	$ 4,261	$ 4,474
	$ 21.24	$ 22.30	$ 23.41	$ 24.58	$ 25.81
WATER CONSERVATION ANALYST	$ 75,216	$ 78,972	$ 82,920	$ 87,072	$ 91,428
	$ 6,268	$ 6,581	$ 6,910	$ 7,256	$ 7,619
	$ 36.16	$ 37.97	$ 39.87	$ 41.86	$ 43.96
WATER OPERATIONS SUPERVISOR	$ 88,452	$ 92,880	$ 97,524	$ 102,396	$ 107,520
	$ 7,371	$ 7,740	$ 8,127	$ 8,533	$ 8,960
	$ 42.53	$ 44.65	$ 46.89	$ 49.23	$ 51.69
WATER PRODUCTION/TREATMENT OPERATOR	$ 59,064	$ 62,016	$ 65,112	$ 68,364	$ 71,784
	$ 4,922	$ 5,168	$ 5,426	$ 5,697	$ 5,982
	$ 28.40	$ 29.82	$ 31.30	$ 32.87	$ 34.51
WATER UTILITY WORKER I	$ 51,648	$ 54,228	$ 56,940	$ 59,784	$ 62,772
	$ 4,304	$ 4,519	$ 4,745	$ 4,982	$ 5,231
	$ 24.83	$ 26.07	$ 27.38	$ 28.74	$ 30.18
WATER UTILITY WORKER II	$ 57,708	$ 60,588	$ 63,612	$ 66,792	$ 70,128
	$ 4,809	$ 5,049	$ 5,301	$ 5,566	$ 5,844
	$ 27.74	$ 29.13	$ 30.58	$ 32.11	$ 33.72

Actual salary may differ due to rounding.

Attachment No. 4

RESOLUTION NO. __

A RESOLUTION OF THE CITY COUNCIL OF THE CITY OF SOUTH PASADENA, CALIFORNIA APPROVING A SIDE LETTER OF AGREEMENT BETWEEN THE CITY OF SOUTH PASADENA AND THE SOUTH PASADENA PART-TIME PUBLIC SERVICE EMPLOYEES' ASSOCIATION AMENDING THE TERM AND SECTION 13 THE EXISTING MEMORANDUM OF UNDERSTANDING AND APPROVING THE SALARY SCHEDULE FOR FISCAL YEAR 2025-26

WHEREAS, the current Memorandum of Agreement (MOU) between the City and the South Pasadena Part-Time Public Service Employees' Association (PT-PSEA) was executed on January 17, 2024, for a term from January 17, 2024 to June 30, 2025;

WHEREAS, the City now desires to amend the Term of Agreement to December 31, 2025, and Section 13 Compensation, to reflect a 2% increase effective July 1, 2025;

WHEREAS, the City met and conferred with the PT-PSEA to discuss the terms and conditions of the proposed amendments; and

WHEREAS, the City and the PT-PSEA have agreed to the terms included in the attached Letter of Agreement, attached hereto as "Exhibit A."

WHEREAS, the City would like to approve the PT-PSEA's Salary Schedule for Fiscal Year 2025-26, in accordance with Title 2 of the California Code of Regulations Section 570.5 and the California Public Employees Retirement System (CalPERS), attached hereto as "Exhibit B".

NOW, THEREFORE, THE CITY COUNCIL OF THE CITY OF SOUTH PASADENA, CALIFORNIA, DOES RESOLVE, DECLARE, DETERMINE AND ORDER AS FOLLOWS:

SECTION 1. The Letter of Agreement (LOA) between the City of South Pasadena and the South Pasadena Part-Time Public Service Employees' Association, attached as Exhibit A, is hereby approved and adopted by the City Council of the City of South Pasadena.

SECTION 2. By adopting this Resolution, the Term and Section 13 of Resolution 7840, which represents the Memorandum of Understanding between the City and the South Pasadena Part-Time Public Service Employees' Association, is being amended in the manner set forth in the attached LOA, Exhibit A.

SECTION 3. The City Council authorizes the City Manager, or designee, to execute the referenced Side Letter of Agreement on behalf of the City of South Pasadena.

SECTION 4: The Salary Schedule for PT-PSEA as set forth in Exhibit B, in accordance with Title 2 of the California Code of Regulations Section 570.5 and the California Public Employees Retirement System (CalPERS), is hereby adopted.

SECTION 5. The City Clerk of the City of South Pasadena shall certify to the passage and adoption of this resolution and its approval by the City Council and shall cause the same to be listed in the records of the City.

PASSED, APPROVED AND ADOPTED on this 18th day of June 2025.

Janet Braun, Mayor

ATTEST:

Hector Gomez, Chief City Clerk

APPROVED AS TO FORM:

Roxanne Diaz, City Attorney

I HEREBY CERTIFY the foregoing resolution was duly adopted by the City Council of the City of South Pasadena, California, at a regular meeting held on the 18th day of June 2025, by the following vote:

AYES:

NOES:

ABSENT:

ABSTAINED:

Hector Gomez, Chief City Clerk

EXHIBIT A

LETTER OF AGREMEENT

AGREEMENT TO EXTEND THE MEMORANDUM OF UNDERSTANDING BETWEEN
THE CITY OF SOUTH PASADENA AND
THE PART-TIME PUBLIC SERVICE EMPLOYEES' ASSOCIATION

WHEREAS, the City of South Pasadena and the Part-Time Public Service Employees Association ("PT-PSEA") have initiated meet and confer negotiations regarding a successor Memorandum of Understanding ("MOU") to the MOU that is set to expire on June 30, 2025; and

WHEREAS, the City and PT-PSEA desire to extend the MOU by six months.

THEREFORE, the Parties agree as follows:

1. The 2022 to 2025 MOU is extended to December 31, 2025.

2. Employees in the PT-PSEA bargaining unit shall be provided a two percent (2%) general wage increase effective July 1, 2025.

IT IS SO AGREED

FOR THE PART-TIME PUBLIC SERVICE EMPLOYEES ASSOCIATION:

_____
CHRISTIANA MILLER
Chief Negotiator, Part-Time Public Service Employees' Association

FOR THE CITY OF SOUTH PASADENA:

_____
L. TODD HILEMAN
City Manager

EXHIBIT B

PT-PSEA SALARY SCHEDULE

CITY OF SOUTH PASADENA
PUBLIC SERVICE EMPLOYEES' ASSOCIATION - PART TIME
SALARY SCHEDULE
Effective July 1, 2025

Amounts shown are annual, monthly, and hourly equivalents.

POSITION TITLE	STEP A	STEP B	STEP C	STEP D	STEP E
ACCOUNTING CLERK	$ 17.28	$ 18.14	$ 19.05	$ 20.00	$ 21.00
COMMUNITY SERVICES COORDINATOR PT	$ 32.16	$ 33.77	$ 35.46	$ 37.23	$ 39.09
FILM LIAISON PT	$ 30.67	$ 32.20	$ 33.81	$ 35.50	$ 37.28
FIRE PREVENTION SPECIALIST	$ 24.13	$ 25.34	$ 26.61	$ 27.94	$ 29.34
HIGH SCHOOL INTERN (INCUMBENT)	$ 16.65	$ 17.48	$ 18.35	$ 19.27	$ 20.23
HIGH SCHOOL INTERN (HIRED AFTER 11/5/14)	$ 16.65	$ 17.48	$ 18.35	$ -	$ -
INTERN (INCUMBENT)	$ 17.52	$ 18.40	$ 19.32	$ 20.29	$ 21.30
INTERN (HIRED AFTER 11/5/14)	$ 17.52	$ 18.40	$ 19.32	$ -	$ -
LEAD TRANSPORTATION DRIVER	$ 22.99	$ 24.14	$ 25.35	$ 26.62	$ 27.95
LIBRARIAN	$ 34.08	$ 35.78	$ 37.57	$ 39.45	$ 41.42
LIBRARY AIDE I	$ 16.65	$ 17.48	$ 18.35	$ 19.27	$ 20.23
LIBRARY AIDE II	$ 17.12	$ 17.98	$ 18.88	$ 19.82	$ 20.81
MAINTENANCE ASSISTANT	$ 22.99	$ 24.14	$ 25.35	$ 26.62	$ 27.95
MANAGEMENT AIDE	$ 27.96	$ 29.36	$ 30.83	$ 32.37	$ 33.99
MANAGEMENT ANALYST PT	$ 36.16	$ 37.97	$ 39.87	$ 41.86	$ 43.95
MANAGEMENT ASSISTANT	$ 31.14	$ 32.70	$ 34.34	$ 36.06	$ 37.86
MANAGEMENT INTERN (INCUMBENT)	$ 24.88	$ 26.12	$ 27.43	$ 28.80	$ 30.24
MANAGEMENT INTERN (HIRED AFTER 11/5/14)	$ 24.88	$ 26.12	$ 27.43	$ -	$ -
PARKING CONTROL AIDE	$ 17.70	$ 18.59	$ 19.52	$ 20.50	$ 21.53
POLICE CADET	$ 17.30	$ 18.17	$ 19.08	$ 20.03	$ 21.03
PRINCIPAL MANAGEMENT ANALYST PT	$ 51.20	$ 53.76	$ 56.45	$ 59.27	$ 62.23
PROGRAM SPECIALIST	$ 27.96	$ 29.36	$ 30.83	$ 32.37	$ 33.99
RECREATION CAMP DIRECTOR	$ 24.13	$ 25.34	$ 26.61	$ 27.94	$ 29.34
RECREATION LEADER	$ 18.31	$ 19.23	$ 20.19	$ 21.20	$ 22.26
REFERENCE LIBRARIAN	$ 34.08	$ 35.78	$ 37.57	$ 39.45	$ 41.42
SENIOR MANAGEMENT ANALYST	$ 41.81	$ 43.90	$ 46.10	$ 48.41	$ 50.83
SITE MANAGER	$ 18.31	$ 19.23	$ 20.19	$ 21.20	$ 22.26

POSITION TITLE	STEP A	STEP B	STEP C	STEP D	STEP E
TRANSPORTATION DRIVER	$ 21.24	$ 22.30	$ 23.42	$ 24.59	$ 25.82
TYPIST CLERK I	$ 16.88	$ 17.72	$ 18.61	$ 19.54	$ 20.52
TYPIST CLERK II	$ 17.86	$ 18.75	$ 19.69	$ 20.67	$ 21.70

Actual salary may differ due to rounding.

RESOLUTION NO. __

A RESOLUTION OF THE CITY COUNCIL OF THE CITY OF SOUTH PASADENA, CALIFORNIA APPROVING AN AMENDMENT TO SECTION 1 AND SECTION 3 OF THE EXISTING UNREPRSENTED MANAGEMENT BENEFITS SUMMARY AND APPROVING THE SALARY SCHEDULE FOR FISCAL YEAR 2025-26

WHEREAS, the current Unrepresented Management Benefits Summary was executed on June 15, 2022, for a term from July 1, 2022 to June 30, 2025;

WHEREAS, the City now desires to amend Section 1 Term of the Unrepresented Management Benefits Summary to extend to December 31, 2025, and Section 3 Salary, to reflect a 2% increase effective July 1, 2025;

WHEREAS, the City has agreed to the terms included in the Amendment, attached hereto as "Exhibit A."

WHEREAS, the City would like to approve the Unrepresented Management Benefits Summary Salary Schedule for Fiscal Year 2025-26, in accordance with Title 2 of the California Code of Regulations Section 570.5 and the California Public Employees Retirement System (CalPERS), attached hereto as "Exhibit B".

NOW, THEREFORE, THE CITY COUNCIL OF THE CITY OF SOUTH PASADENA, CALIFORNIA, DOES RESOLVE, DECLARE, DETERMINE AND ORDER AS FOLLOWS:

SECTION 1. The Amendment to the Unrepresented Management Benefits Summary, is attached as Exhibit A, is hereby approved and adopted by the City Council of the City of South Pasadena.

SECTION 2. By adopting this Resolution, Section 1 and Section 3 of Resolution 7775, which represents the Unrepresented Management Benefits Summary, is being amended in the manner set forth in the attached Amendment, Exhibit A.

SECTION 3. The City Council authorizes the City Manager, or designee, to execute the referenced Amendment on behalf of the City of South Pasadena.

SECTION 4: The Salary Schedule for the Unrepresented Management Benefits Summary, as set forth in Exhibit B, in accordance with Title 2 of the California Code of Regulations Section 570.5 and the California Public Employees Retirement System (CalPERS), is hereby adopted.

SECTION 5. The City Clerk of the City of South Pasadena shall certify to the passage and adoption of this resolution and its approval by the City Council and shall cause the same to be listed in the records of the City.

PASSED, APPROVED AND ADOPTED on this 18th day of June 2025.

Janet Braun, Mayor

ATTEST:

Hector Gomez, Chief City Clerk

APPROVED AS TO FORM:

Roxanne Diaz, City Attorney

I HEREBY CERTIFY the foregoing resolution was duly adopted by the City Council of the City of South Pasadena, California, at a regular meeting held on the 18th day of June 2025, by the following vote:

AYES:

NOES:

ABSENT:

ABSTAINED:

Hector Gomez, Chief City Clerk

EXHIBIT A

LETTER OF AGREMEENT

AMENDMENT TO SOUTH PASADENA'S UNREPRESENTED MANAGEMENT BENEFITS SUMMARY

WHEREAS, the City of South Pasadena's Unrepresented Management Benefits Summary is set to expire on June 30, 2025; and

WHEREAS, the City desires to extend the Unrepresented Management Benefits Summary by six months.

THEREFORE, the City agrees as follows:

1. The 2022 to 2025 Unrepresented Management Benefits Summary is extended to December 31, 2025.

2. Employees in the Unrepresented Management Benefits Summary shall be provided a two percent (2%) general wage increase effective July 1, 2025.

IT IS SO AGREED

FOR THE CITY OF SOUTH PASADENA:

_____

L. TODD HILEMAN
City Manager

EXHIBIT B

UNREPRESENTED MANAGEMENT BENEFITS SUMMARY SALARY SCHEDULE

CITY OF SOUTH PASADENA
UNREPRESENTED
SALARY SCHEDULE
Effective July 1, 2025

Amounts shown are annual, and monthly equivalents.

POSITION TITLE	STEP A	STEP B	STEP C	STEP D	STEP E	STEP F	STEP G
CITY COUNCIL	$ 11,400	--	--	--	--	--	--
	$ 950	--	--	--	--	--	--
CITY TREASURER	$ 8,472	--	--	--	--	--	--
	$ 706	--	--	--	--	--	--

Amounts shown are annual, monthly, and hourly equivalents.

POSITION TITLE	STEP A	STEP B	STEP C	STEP D	STEP E	STEP F	STEP G
CITY MANAGER	$ 300,000	--	--	--	--	--	--
	$ 25,000	--	--	--	--	--	--
	$ 144.23	--	--	--	--	--	--

Amounts shown are annual, monthly, and hourly equivalents.

POSITION TITLE	STEP A	STEP B	STEP C	STEP D	STEP E	STEP F	STEP G
ACCOUNTING MANAGER-CONTROLLER	$ 134,796	$ 141,540	$ 148,620	$ 156,048	$ 163,848	$ 172,044	$ 180,648
	$ 11,233	$ 11,795	$ 12,385	$ 13,004	$ 13,654	$ 14,337	$ 15,054
	$ 64.81	$ 68.05	$ 71.45	$ 75.02	$ 78.77	$ 82.71	$ 86.85
ASSISTANT CITY MANAGER/CHIEF FINANCIAL OFFICER	$ 182,664	$ 191,796	$ 201,384	$ 211,452	$ 222,024	$ 233,124	$ 244,776
	$ 15,222	$ 15,983	$ 16,782	$ 17,621	$ 18,502	$ 19,427	$ 20,398
	$ 87.82	$ 92.21	$ 96.82	$ 101.66	$ 106.74	$ 112.08	$ 117.68
ASSISTANT LIBRARY DIRECTOR	$ 98,448	$ 103,368	$ 108,540	$ 113,964	$ 119,664	$ 125,652	$ 131,940
	$ 8,204	$ 8,614	$ 9,045	$ 9,497	$ 9,972	$ 10,471	$ 10,995
	$ 47.33	$ 49.70	$ 52.18	$ 54.79	$ 57.53	$ 60.41	$ 63.43
ASSISTANT TO THE CITY MANAGER	$ 106,500	$ 111,828	$ 117,420	$ 123,288	$ 129,456	$ 135,924	$ 142,716
	$ 8,875	$ 9,319	$ 9,785	$ 10,274	$ 10,788	$ 11,327	$ 11,893
	$ 51.20	$ 53.76	$ 56.45	$ 59.27	$ 62.24	$ 65.35	$ 68.61
BUDGET & PURCHASING MANAGER	$ 121,188	$ 127,248	$ 133,608	$ 140,292	$ 147,312	$ 154,680	$ 162,420
	$ 10,099	$ 10,604	$ 11,134	$ 11,691	$ 12,276	$ 12,890	$ 13,535
	$ 58.26	$ 61.18	$ 64.23	$ 67.45	$ 70.82	$ 74.37	$ 78.09
CIP PROGRAM MANAGER	$ 106,500	$ 111,828	$ 117,420	$ 123,288	$ 129,456	$ 135,924	$ 142,716

POSITION TITLE	STEP A	STEP B	STEP C	STEP D	STEP E	STEP F	STEP G
	$ 8,875	$ 9,319	$ 9,785	$ 10,274	$ 10,788	$ 11,327	$ 11,893
	$ 51.20	$ 53.76	$ 56.45	$ 59.27	$ 62.24	$ 65.35	$ 68.61
CHIEF CITY CLERK	$ 106,500	$ 111,828	$ 117,420	$ 123,288	$ 129,456	$ 135,924	$ 142,716
	$ 8,875	$ 9,319	$ 9,785	$ 10,274	$ 10,788	$ 11,327	$ 11,893
	$ 51.20	$ 53.76	$ 56.45	$ 59.27	$ 62.24	$ 65.35	$ 68.61
COMMUNITY DEVELOPMENT DIRECTOR	$ 169,836	$ 178,332	$ 187,248	$ 196,608	$ 206,436	$ 216,756	$ 227,592
	$ 14,153	$ 14,861	$ 15,604	$ 16,384	$ 17,203	$ 18,063	$ 18,966
	$ 81.65	$ 85.74	$ 90.02	$ 94.52	$ 99.25	$ 104.21	$ 109.42
COMMUNITY SERVICES DIRECTOR	$ 139,008	$ 145,956	$ 153,252	$ 160,920	$ 168,972	$ 177,420	$ 186,288
	$ 11,584	$ 12,163	$ 12,771	$ 13,410	$ 14,081	$ 14,785	$ 15,524
	$ 66.83	$ 70.17	$ 73.68	$ 77.37	$ 81.24	$ 85.30	$ 89.56
COMMUNITY SERVICES SUPERVISOR	$ 68,328	$ 71,748	$ 75,336	$ 79,104	$ 83,064	$ 87,216	$ 91,572
	$ 5,694	$ 5,979	$ 6,278	$ 6,592	$ 6,922	$ 7,268	$ 7,631
	$ 32.85	$ 34.49	$ 36.22	$ 38.03	$ 39.93	$ 41.93	$ 44.03
DEPUTY CITY MANAGER	$ 148,140	$ 155,544	$ 163,320	$ 171,492	$ 180,072	$ 189,072	$ 198,528
	$ 12,345	$ 12,962	$ 13,610	$ 14,291	$ 15,006	$ 15,756	$ 16,544
	$ 71.22	$ 74.78	$ 78.52	$ 82.45	$ 86.57	$ 90.90	$ 95.45
DEPUTY COMMUNITY DEVELOPMENT DIRECTOR	$ 113,004	$ 118,656	$ 124,584	$ 130,812	$ 137,352	$ 144,216	$ 151,428
	$ 9,417	$ 9,888	$ 10,382	$ 10,901	$ 11,446	$ 12,018	$ 12,619
	$ 54.33	$ 57.05	$ 59.90	$ 62.89	$ 66.03	$ 69.33	$ 72.80
DEPUTY COMMUNITY SERVICES DIRECTOR	$ 107,340	$ 112,704	$ 118,344	$ 124,260	$ 130,476	$ 137,004	$ 143,856
	$ 8,945	$ 9,392	$ 9,862	$ 10,355	$ 10,873	$ 11,417	$ 11,988
	$ 51.61	$ 54.18	$ 56.90	$ 59.74	$ 62.73	$ 65.87	$ 69.16
DEPUTY DIRECTOR OF PUBLIC WORKS	$ 116,568	$ 122,400	$ 128,520	$ 134,952	$ 141,696	$ 148,776	$ 156,216
	$ 9,714	$ 10,200	$ 10,710	$ 11,246	$ 11,808	$ 12,398	$ 13,018
	$ 56.04	$ 58.85	$ 61.79	$ 64.88	$ 68.12	$ 71.53	$ 75.10
DEPUTY FINANCE DIRECTOR/CONTROLLER	$ 113,004	$ 118,656	$ 124,584	$ 130,812	$ 137,352	$ 144,216	$ 151,428
	$ 9,417	$ 9,888	$ 10,382	$ 10,901	$ 11,446	$ 12,018	$ 12,619
	$ 54.33	$ 57.05	$ 59.90	$ 62.89	$ 66.03	$ 69.33	$ 72.80

POSITION TITLE	STEP A	STEP B	STEP C	STEP D	STEP E	STEP F	STEP G
DEPUTY FIRE CHIEF	$ 136,584	$ 143,412	$ 150,588	$ 158,112	$ 166,020	$ 174,324	$ 183,036
	$ 11,382	$ 11,951	$ 12,549	$ 13,176	$ 13,835	$ 14,527	$ 15,253
	$ 65.67	$ 68.95	$ 72.40	$ 76.02	$ 79.82	$ 83.81	$ 88.00
DEPUTY POLICE CHIEF	$ 152,472	$ 160,092	$ 168,096	$ 176,496	$ 185,316	$ 194,580	$ 204,312
	$ 12,706	$ 13,341	$ 14,008	$ 14,708	$ 15,443	$ 16,215	$ 17,026
	$ 73.30	$ 76.97	$ 80.82	$ 84.85	$ 89.09	$ 93.55	$ 98.23
ENVIRONMENTAL & SUSTAINABILITY MANAGER	$ 97,020	$ 101,868	$ 106,956	$ 112,308	$ 117,924	$ 123,816	$ 130,008
	$ 8,085	$ 8,489	$ 8,913	$ 9,359	$ 9,827	$ 10,318	$ 10,834
	$ 46.64	$ 48.98	$ 51.42	$ 53.99	$ 56.69	$ 59.53	$ 62.50
EXECUTIVE ASSISTANT	$ 74,016	$ 77,712	$ 81,600	$ 85,680	$ 89,964	$ 94,464	$ 99,192
	$ 6,168	$ 6,476	$ 6,800	$ 7,140	$ 7,497	$ 7,872	$ 8,266
	$ 35.58	$ 37.36	$ 39.23	$ 41.19	$ 43.25	$ 45.42	$ 47.69
FINANCE DIRECTOR	$ 157,344	$ 165,216	$ 173,472	$ 182,148	$ 191,256	$ 200,820	$ 210,864
	$ 13,112	$ 13,768	$ 14,456	$ 15,179	$ 15,938	$ 16,735	$ 17,572
	$ 75.65	$ 79.43	$ 83.40	$ 87.57	$ 91.95	$ 96.55	$ 101.38
FINANCE MANAGER	$ 103,020	$ 108,168	$ 113,580	$ 119,256	$ 125,220	$ 131,484	$ 138,060
	$ 8,585	$ 9,014	$ 9,465	$ 9,938	$ 10,435	$ 10,957	$ 11,505
	$ 49.53	$ 52.00	$ 54.61	$ 57.33	$ 60.20	$ 63.21	$ 66.38
FIRE CHIEF	$ 169,836	$ 178,332	$ 187,248	$ 196,608	$ 206,436	$ 216,756	$ 227,592
	$ 14,153	$ 14,861	$ 15,604	$ 16,384	$ 17,203	$ 18,063	$ 18,966
	$ 81.65	$ 85.74	$ 90.02	$ 94.52	$ 99.25	$ 104.21	$ 109.42
FIRE DIVISION CHIEF	$ 124,380	$ 130,596	$ 137,124	$ 143,976	$ 151,176	$ 158,736	$ 166,668
	$ 10,365	$ 10,883	$ 11,427	$ 11,998	$ 12,598	$ 13,228	$ 13,889
	$ 42.71	$ 44.85	$ 47.09	$ 49.44	$ 51.91	$ 54.51	$ 57.23
HUMAN RESOURCES & RISK MANAGER	$ 121,188	$ 127,248	$ 133,608	$ 140,292	$ 147,312	$ 154,680	$ 162,420
	$ 10,099	$ 10,604	$ 11,134	$ 11,691	$ 12,276	$ 12,890	$ 13,535
	$ 58.26	$ 61.18	$ 64.23	$ 67.45	$ 70.82	$ 74.37	$ 78.09
LIBRARY DIRECTOR	$ 132,588	$ 139,212	$ 146,172	$ 153,480	$ 161,160	$ 169,224	$ 177,684
	$ 11,049	$ 11,601	$ 12,181	$ 12,790	$ 13,430	$ 14,102	$ 14,807
	$ 63.74	$ 66.93	$ 70.28	$ 73.79	$ 77.48	$ 81.36	$ 85.43
MANAGEMENT SERVICES DIRECTOR	$ 142,560	$ 149,688	$ 157,176	$ 165,036	$ 173,292	$ 181,956	$ 191,052
	$ 11,880	$ 12,474	$ 13,098	$ 13,753	$ 14,441	$ 15,163	$ 15,921
	$ 68.54	$ 71.97	$ 75.57	$ 79.34	$ 83.31	$ 87.48	$ 91.85

POSITION TITLE	STEP A	STEP B	STEP C	STEP D	STEP E	STEP F	STEP G
PLANNING MANAGER	$ 121,188	$ 127,248	$ 133,608	$ 140,292	$ 147,312	$ 154,680	$ 162,420
	$ 10,099	$ 10,604	$ 11,134	$ 11,691	$ 12,276	$ 12,890	$ 13,535
	$ 58.26	$ 61.18	$ 64.23	$ 67.45	$ 70.82	$ 74.37	$ 78.09
POLICE CHIEF	$ 169,836	$ 178,332	$ 187,248	$ 196,608	$ 206,436	$ 216,756	$ 227,592
	$ 14,153	$ 14,861	$ 15,604	$ 16,384	$ 17,203	$ 18,063	$ 18,966
	$ 81.65	$ 85.74	$ 90.02	$ 94.52	$ 99.25	$ 104.21	$ 109.42
POLICE LIEUTENANT	$ 113,832	$ 119,520	$ 125,496	$ 131,772	$ 138,360	$ 145,284	$ 152,544
	$ 9,486	$ 9,960	$ 10,458	$ 10,981	$ 11,530	$ 12,107	$ 12,712
	$ 54.73	$ 57.46	$ 60.33	$ 63.35	$ 66.52	$ 69.85	$ 73.34
PRINCIPAL ENGINEER	$ 116,568	$ 122,400	$ 128,520	$ 134,952	$ 141,696	$ 148,776	$ 156,216
	$ 9,714	$ 10,200	$ 10,710	$ 11,246	$ 11,808	$ 12,398	$ 13,018
	$ 56.04	$ 58.85	$ 61.79	$ 64.88	$ 68.12	$ 71.53	$ 75.10
PRINCIPAL MANAGEMENT ANALYST	$ 106,500	$ 111,828	$ 117,420	$ 123,288	$ 129,456	$ 135,924	$ 142,716
	$ 8,875	$ 9,319	$ 9,785	$ 10,274	$ 10,788	$ 11,327	$ 11,893
	$ 51.20	$ 53.76	$ 56.45	$ 59.27	$ 62.24	$ 65.35	$ 68.61
PUBLIC AFFAIRS MANAGER	$ 113,004	$ 118,656	$ 124,584	$ 130,812	$ 137,352	$ 144,216	$ 151,428
	$ 9,417	$ 9,888	$ 10,382	$ 10,901	$ 11,446	$ 12,018	$ 12,619
	$ 54.33	$ 57.05	$ 59.90	$ 62.89	$ 66.03	$ 69.33	$ 72.80
PUBLIC WORKS DIRECTOR	$ 169,836	$ 178,332	$ 187,248	$ 196,608	$ 206,436	$ 216,756	$ 227,592
	$ 14,153	$ 14,861	$ 15,604	$ 16,384	$ 17,203	$ 18,063	$ 18,966
	$ 81.65	$ 85.74	$ 90.02	$ 94.52	$ 99.25	$ 104.21	$ 109.42
PUBLIC WORKS OPERATION MANAGER	$ 97,020	$ 101,868	$ 106,956	$ 112,308	$ 117,924	$ 123,816	$ 130,008
	$ 8,085	$ 8,489	$ 8,913	$ 9,359	$ 9,827	$ 10,318	$ 10,834
	$ 46.64	$ 48.98	$ 51.42	$ 53.99	$ 56.69	$ 59.53	$ 62.50
PUBLIC WORKS SUPERINTENDENT	$ 108,384	$ 113,808	$ 119,496	$ 125,472	$ 131,748	$ 138,336	$ 145,248
	$ 9,032	$ 9,484	$ 9,958	$ 10,456	$ 10,979	$ 11,528	$ 12,104
	$ 52.11	$ 54.72	$ 57.45	$ 60.32	$ 63.34	$ 66.51	$ 69.83
SENIOR CIVIL ENGINEER	$ 108,816	$ 114,252	$ 119,964	$ 125,964	$ 132,264	$ 138,876	$ 145,824
	$ 9,068	$ 9,521	$ 9,997	$ 10,497	$ 11,022	$ 11,573	$ 12,152
	$ 52.32	$ 54.93	$ 57.68	$ 60.56	$ 63.59	$ 66.77	$ 70.11
SENIOR HUMAN RESOURCES ANALYST	$ 97,812	$ 102,708	$ 107,844	$ 113,232	$ 118,896	$ 124,836	$ 131,076
	$ 8,151	$ 8,559	$ 8,987	$ 9,436	$ 9,908	$ 10,403	$ 10,923
	$ 47.03	$ 49.38	$ 51.85	$ 54.44	$ 57.16	$ 60.02	$ 63.02
SENIOR MANAGEMENT ANALYST	$ 78,888	$ 82,836	$ 86,976	$ 91,320	$ 95,892	$ 100,692	$ 105,732
	$ 6,574	$ 6,903	$ 7,248	$ 7,610	$ 7,991	$ 8,391	$ 8,811

POSITION TITLE	STEP A	STEP B	STEP C	STEP D	STEP E	STEP F	STEP G
	$ 37.93	$ 39.83	$ 41.82	$ 43.90	$ 46.10	$ 48.41	$ 50.83

POSITION TITLE	STEP A	STEP B	STEP C	STEP D	STEP E	STEP F	STEP G
TRANSPORTATION PROGRAM MANAGER	$ 93,192	$ 97,848	$ 102,744	$ 107,880	$ 113,280	$ 118,944	$ 124,896
	$ 7,766	$ 8,154	$ 8,562	$ 8,990	$ 9,440	$ 9,912	$ 10,408
	$ 44.80	$ 47.04	$ 49.40	$ 51.87	$ 54.46	$ 57.18	$ 60.05
WATER OPERATIONS MANAGER	$ 104,124	$ 109,332	$ 114,804	$ 120,540	$ 126,564	$ 132,888	$ 139,536
	$ 8,677	$ 9,111	$ 9,567	$ 10,045	$ 10,547	$ 11,074	$ 11,628
	$ 50.06	$ 52.56	$ 55.19	$ 57.95	$ 60.85	$ 63.89	$ 67.08

Actual salary may differ due to rounding.