CITY OF THE COLONY
CITY COUNCIL AGENDA
TUESDAY, NOVEMBER 17, 2026
6:30 PM

TO ALL INTERESTED PERSONS

Notice is hereby given of a **REGULAR SESSION of the CITY COUNCIL** of the City of The Colony, Texas to be held at **6:30 PM** on **TUESDAY, NOVEMBER 17, 2026** at **CITY HALL, 6053 MAIN STREET**, at which time the following items will be addressed:

1.0 ROUTINE ANNOUNCEMENTS, RECOGNITIONS and PROCLAMATIONS

1.1 Call to Order

1.2 Invocation

1.3 Pledge of Allegiance to the United States Flag

1.4 Salute to the Texas Flag

1.5 Recognize the Speech & Debate Team from The Colony High School. (Mayor)

1.6 Items of Community Interest

1.7 Receive presentation from the Library regarding upcoming events and activities. (Charters)

2.0 CANVASS THE ELECTION

2.1 Discuss and consider approving an ordinance canvassing the returns and declaring the results of an election held on Tuesday, November 3, 2026, for the purpose of electing four (4) councilmembers for said city; providing the candidate for Place 3, Place 5 and Place 6 elected to office; ordering a run-off election for Place 4. (Mayor)

3.0 OATH OF OFFICE

3.1 Oath of Office for elected City Council members of Place 3, Place 5 and Place 6. (Stewart)

4.0 CITIZEN INPUT

This portion of the meeting is to allow up to five (5) minutes per speaker with a maximum of thirty (30) minutes for items not posted on the current agenda. The council may not discuss these items, but may respond with factual data or policy information, or place the item on a future agenda. Those wishing to speak shall submit a Request Form to the City Secretary.

5.0 WORK SESSION

The Work Session is for the purpose of exchanging information regarding public business or policy. No action is taken on Work Session items. Citizen input will not be heard during this portion of the agenda.

5.1 Council to provide direction to staff regarding future agenda items. (Council)

6.0 CONSENT AGENDA

The Consent Agenda contains items which are routine in nature and will be acted upon in one motion. Items may be removed from this agenda for separate discussion by a Council member.

6.1 Consider approving City Council Regular Session meeting minutes from November 4, 2026. (Stewart)

6.2 Consider approving a resolution authorizing the City Manager to award a purchase to Galls LLC in the amount of $118,503.00, utilizing BuyBoard contract number 773-25 for Fire Department uniforms. (Stephens)

6.3 Consider approving a resolution authorizing the City Manager to award a contract to Regional Railroad Safety Services, LLC, for mowing services in an annual amount not to exceed $238,630.32. (Townley)

6.4 Discuss and consider approving a resolution authorizing the City Manager to execute a contract with NGU Sports Lighting, LLC for the purchase and installation of LED lighting fixtures and poles for the B.B. Owen Park Project, utilizing TIPS Contract # 23010402, in an amount not to exceed $480,000.00 to be funded by the Community Development Corporation. (Lehmann)

7.0 REGULAR AGENDA ITEMS

7.1 Discuss and consider approving a resolution authorizing the City Manager to execute a contract with Steele & Freeman, Inc., for the construction of the new Recreation Center in the amount of $27,476,822.00 guaranteed maximum price (GMP) to be funded by the Community Development Corporation. (Lehmann)

7.2 Discuss and consider a resolution authorizing and approving certain payments by the Colony Local Development Corporation, the Colony Economic Development Corporation, and the Colony Community Development Corporation for costs related to the construction of projects within the Tax Increment Reinvestment Zone No. 1, City of the Colony, Texas for Grandscape; providing for an effective date; and resolving other matters related thereto. (Miller)

8.0 EXECUTIVE SESSION

8.1 Council shall convene into a closed executive session pursuant to Sections 551.072 and 551.087 of the Texas Government Code to deliberate regarding purchase, exchange, lease or value of real property and commercial or financial information the city has received from a business prospect(s), and to deliberate the offer of a financial or other incentive to a business prospect(s).

8.2 Council shall convene into a closed executive session pursuant to Section 551.071 of the Texas Government Code to receive legal advice from its attorney regarding pending litigation: TOCA Colony, LLC v. Blue Sky Sports Center, LP, and the City of The Colony, Texas.

9.0 EXECUTIVE SESSION ACTION

9.1 Any action as a result of executive session regarding purchase, exchange, lease or value of real property and commercial or financial information the city has received from a business prospect(s), and the offer of a financial or other incentive to a business prospect(s).

9.2 Any action as a result of executive session regarding pending litigation: TOCA Colony, LLC v. Blue Sky Sports Center, LP, and the City of The Colony, Texas.

EXECUTIVE SESSION NOTICE

Pursuant to the Texas Open Meeting Act, Government Code Chapter 551 one or more of the above items may be considered in executive session closed to the public, including but not limited to consultation with attorney pursuant to Texas Government Code Section 551.071 arising out of the attorney's ethical duty to advise the city concerning legal issues arising from an agenda item. Any decision held on such matter will be taken or conducted in open session following the conclusion of the executive session.

ADJOURNMENT

If you wish to address the City Council in person, you can do so by attending the meeting at City Hall. If you wish to have comments added to the council minutes about issues on the Agenda, you may submit those comments to the City Secretary Office via email or on the city website. Persons with disabilities who plan to attend this meeting who may need auxiliary aids such as interpreters for persons who are deaf or hearing impaired, readers or, large print are requested to contact the City Secretary's Office, at 972-624-3105 at least two (2) working days prior to the meeting so that appropriate arrangements can be made.

CERTIFICATION

I hereby certify that above notice of meeting was posted outside the front door of City Hall by 5 p.m. on the 10th day of November 2026.

Tina Stewart

Tina Stewart, TRMC, CMC, City Secretary

CITY COUNCIL Agenda Item Report

Meeting Date: November 17, 2026
Submitted By: Ana Alvarado
Submitting Department: City Secretary
Item Type: Recognition
Agenda Section: routine announcements, recognitions and proclamations

---

Suggested Action:
Recognize the Speech & Debate Team from The Colony High School. (Mayor)

Background:

CITY COUNCIL Agenda Item Report

Meeting Date: November 17, 2026
Submitted By: Ana Alvarado
Submitting Department: City Secretary
Item Type: Announcement
Agenda Section: routine announcements, recognitions and proclamations

---

Suggested Action:
Items of Community Interest

Background:

Agenda Item No: 1.7

CITY COUNCIL Agenda Item Report

Meeting Date: November 17, 2026
Submitted By: Ana Alvarado
Submitting Department: Library
Item Type: Announcement
Agenda Section: routine announcements, recognitions and proclamations

---

Suggested Action:
Receive presentation from the Library regarding upcoming events and activities. (Charters)

Background:

Agenda Item No: 2.1

CITY COUNCIL Agenda Item Report

Meeting Date: November 17, 2026
Submitted By: Ana Alvarado
Submitting Department: City Secretary
Item Type: Announcement
Agenda Section: canvass the election

Suggested Action:
Discuss and consider approving an ordinance canvassing the returns and declaring the results of an election held on Tuesday, November 3, 2026, for the purpose of electing four (4) councilmembers for said city; providing the candidate for Place 3, Place 5 and Place 6 elected to office; ordering a run-off election for Place 4. (Mayor)

Background:

Attachments:
Ord. 2026-xxx Canvassing Results - Ordering Runoff Election for December 12, 2026.docx

CITY OF THE COLONY, TEXAS

ORDINANCE NO. 2026 - _____

AN ORDINANCE OF THE CITY COUNCIL OF THE CITY OF THE COLONY, TEXAS, CANVASSING THE RETURNS AND DECLARING THE RESULTS OF AN ELECTION HELD ON TUESDAY NOVEMBER 3, 2026, FOR THE PURPOSE OF ELECTING FOUR (4) COUNCILMEMBERS FOR SAID CITY; PROVIDING THE CANDIDATE FOR PLACE 3, PLACE 5 AND PLACE 6 BE ELECTED TO OFFICE; ORDERING A RUN-OFF ELECTION FOR PLACE 4; AND PROVIDING AN EFFECTIVE DATE

WHEREAS, the City Council of the City of The Colony, Texas, caused to be published in accordance with the laws of the State of Texas notice of the election held on Tuesday, November 3, 2026, to elect four (4) council members for the City of The Colony, Texas; and

WHEREAS, notice of election was actually given as required by law; and

WHEREAS, said election was duly and legally held on Tuesday, November 3, 2026, in conformity with the election laws of the State of Texas, and the results of said election have been certified and returned by the election judges and clerks thereof; and

WHEREAS, the election returns duly and legally made showed that there were cast at said election **13,637** valid and legal votes, and that each of the candidates in said election received the following votes:

FOR COUNCILMEMBER PLACE 3

CANDIDATE	PERCENTAGE	TOTAL VOTES
BRIAN R. WADE	70.82%	2,175
ELDON J. PIPES	29.18%	896
VOTES CAST		3,071

FOR COUNCILMEMBER PLACE 4

CANDIDATE	PERCENTAGE	TOTAL VOTES
DAN MCNEW	29.20%	1,331
DAN RAINEY	48.29%	2,201
TIM COSTELLO	22.51%	1,026
VOTES CAST		4,558

FOR COUNCILMEMBER PLACE 5

CANDIDATE	PERCENTAGE	TOTAL VOTES
PERRY SCHRAG	50.05%	1,368
MATTHEW MICHAELSON	49.95%	1,365
VOTES CAST		2,733

FOR COUNCILMEMBER PLACE 6

CANDIDATE	PERCENTAGE	TOTAL VOTES
MATTHEW WHEELER	60.02%	2,031
JOEL MARKS	37.98%	1,244
VOTES CAST		3,275

WHEREAS, pursuant to Section 7.04 of the Home Rule Charter of the City of The Colony, Texas, in order to be declared elected, a candidate must receive a majority of the legal votes cast for the office or place for which such person is a candidate; and

WHEREAS, no candidate for Councilmember Place 4 received a majority of the votes cast for such office or place; and

WHEREAS, it is hereby found and determined by the City Council of the City of The Colony, Texas, that it is necessary to hold a runoff election for the purpose of electing one council member for Place 4 and that it is in the best interest of the City and its citizens to hold such an election; and

WHEREAS, pursuant to Section 7.05 of the Home Rule Charter of the City of The Colony, Texas, and the Texas Election Code, the City is hereby authorized to call a runoff election between the two candidates receiving the highest number of votes; and such runoff election shall be held in accordance with state law.

NOW, THEREFORE, BE IT ORDAINED BY THE CITY COUNCIL OF THE CITY OF THE COLONY, TEXAS:

Section 1. That the findings set forth above are incorporated into the body of this Ordinance as if fully set forth herein.

Section 2. That it is further found and determined that the results of the election as canvassed and tabulated in the preamble reflect the expressed desires of the resident, qualified electors.

Section 3. That the duly elected member of the City Council of the City of The Colony, Texas, elected November 3, 2026, for City Council Place 3, Place 5 and Place 6, and subject to the taking of the oath of office as provided by the laws of the State of Texas, is as follows:

Brian R. Wade, Councilmember Place 3
Perry Schrag, Councilmember Place 5
Matthew Wheeler, Councilmember Place 6

Section 4. That no candidate received a majority of total votes cast for the office of Councilmember Place 4 and a runoff election between the two (2) candidates receiving the highest number of votes cast for said office as tabulated and canvassed in the preambles hereof shall be held on Saturday, December 12, 2026, for the purpose of electing a Councilmember for Place 4 to serve on the City Council of the City of The Colony, Texas. The two (2) candidates for said runoff are as follows:

Councilmember Place 4
Dan McNew
Dan Rainey

Section 5. That the runoff election shall be held on Saturday, December 12, 2026, at the following location between the hours of 7:00 a.m. and 7:00 p.m.:

Election Day Polling Location:
The Colony Annex Building
6804 Main Street
Annex Building
The Colony, Texas 75056

Section 6. That the Presiding Judge for each polling place shall appoint not less than two (2) or more than four (4) qualified election clerks to serve and assist in the conduct of the runoff election, provided that if the Presiding Judge actually serves as expected, the Alternate Presiding Judge shall be one of such clerks.

Section 7. As to early voting for said election, such early voting shall be conducted by the Denton County Elections Administrator, who is hereby appointed the Clerk for Early Voting, at:

Early Voting Polling Location:
The Colony Annex Building
6804 Main Street
Annex Building
The Colony, Texas 75056

For the early voting period for said runoff election, the Clerk shall keep said office open for the early voting period in accordance with state law and according to the following schedule:

Early Voting dates and times:

Monday – Friday	Nov. 30 – Dec. 4, 2026	TBD
Saturday	Nov. 5, 2026	TBD
Sunday	Nov. 6, 2026	TBD
Monday – Tuesday	Nov. 7 – Dec. 8, 2026	TBD

The early ballots for said election shall conform to the requirements of the Texas Election Code, as amended, and in so doing shall permit the voters to vote for one Councilmember Place 4, as applicable.

Section 8. The election materials for said runoff election shall be printed in both English and Spanish for use at the polling place during early voting and Election Day consistent with the Texas Election Code.

Section 9. Notice of said runoff election shall be given by publishing at least one time before the election, provided, however, publication shall be as soon as practicable before the runoff election, in at least one daily newspaper published in the City and a copy of the notice shall also be filed with the City Secretary and another copy shall be posted a bulletin board in the office of the City Secretary, at least 15 days before the runoff election.

Section 10. That the public importance of this measure and the fact that it is in the best interest of the City to declare the duly elected officers of the City at the earliest possible date for the immediate preservation of the public peace, property, health and safety of the City and its citizens creates an emergency and an imperative public necessity which requires that this Ordinance shall take effect and be in force from and after its final passage and approval, and it is accordingly so ordained.

PASSED AND APPROVED, BY THE CITY COUNCIL OF THE CITY OF THE COLONY, TEXAS, THIS 17TH DAY OF NOVEMBER 2026.

_____
Richard Boyer, Mayor
City of The Colony, Texas

ATTEST:

_____
Tina Stewart, TRMC, CMC, City Secretary

APPROVED AS TO FORM:

_____
Jeffrey L. Moore, City Attorney

CITY COUNCIL Agenda Item Report

Meeting Date: November 17, 2026
Submitted By: Ana Alvarado
Submitting Department: City Secretary
Item Type: Announcement
Agenda Section: oath of office

Suggested Action:
Oath of Office for elected City Council members of Place 3, Place 5 and Place 6. (Stewart)

Background:

Agenda Item No: 5.1

CITY COUNCIL Agenda Item Report

Meeting Date: November 17, 2026
Submitted By: Ana Alvarado
Submitting Department: City Secretary
Item Type: Discussion
Agenda Section: work session

Suggested Action:
Council to provide direction to staff regarding future agenda items. (Council)

Background:

Agenda Item No: 6.1

CITY COUNCIL Agenda Item Report

Meeting Date: November 17, 2026
Submitted By: Ana Alvarado
Submitting Department: City Secretary
Item Type: Minutes
Agenda Section: consent agenda

Suggested Action:
Consider approving City Council Regular Session meeting minutes from November 4, 2026. (Stewart)

Background:

Attachments:
November 4, 2026 DRAFT Minutes.docx

MINUTES OF CITY COUNCIL REGULAR SESSION
HELD ON
NOVEMBER 4, 2026

The Regular Session of the City Council of the City of The Colony, Texas, was called to order at 6:32 p.m. on the 4th day of November 2026, at City Hall, 6053 Main Street, The Colony, Texas, with the following roll call:

Richard Boyer, Mayor	Present
Judy Ensweiler, Councilmember	Present
Robyn Holtz, Deputy Mayor Pro Tem	Present
Brian R. Wade, Councilmember	Present
Dan Rainey, Councilmember	Present
Perry Schrag, Councilmember	Present
Joel Marks, Mayor Pro Tem	Present

And with 7 council members present a quorum was established and the following items were addressed:

1.0 ROUTINE ANNOUNCEMENTS, RECOGNITIONS and PROCLAMATIONS

1.1 Call to Order
Mayor Richard Boyer called the meeting to order at 6:32 p.m.

1.2 Invocation
Pastor James Falola with New Covenant Baptist Church delivered the invocation.

1.3 Pledge of Allegiance to the United States Flag
The Pledge of Allegiance to the United States Flag was recited.

1.4 Salute to the Texas Flag
The Salute to the Texas Flag was recited.

1.5 Proclamation recognizing National Animal Shelter Appreciation Week.
Councilmember Brian R. Wade presented the proclamation recognizing National Animal Shelter Appreciation Week. Animal Services Director Mark Cooper and city staff accepted the proclamation.

Deputy Mayor Pro Tem Robyn Holtz arrived at 6:34 p.m.

1.6 Items of Community Interest
1.) Mayor Pro Tem Joel Marks announced the arts and crafts event happening this Thursday, November 5 through Saturday, November 8 at the Holiday Inn.

2.) Mayor Richard Boyer announced the School of Rock Anniversary celebration happening Saturday, November 7. Collection of food donations for the food pantry will be part of the event.

[1] These items are strictly public service announcements. Expressions of thanks, congratulations or condolences; information regarding holiday schedules; honorary recognition of city officials, employees or other citizens; reminders about upcoming **events sponsored by the City or other entity that are scheduled to be attended by a city official or city employee. No action will** be taken and no direction will be given regarding these items.

3.) Councilmember Judy Ensweiler announced the monthly food drive at First Baptist Church occurring on the 3rd Saturday of the month.

1.7 Receive presentation from Parks and Recreation regarding upcoming events and activities.
Senior Center Supervisor Amanda Porter provided upcoming events and activities to the council.

2.0 CITIZEN INPUT

1.) Sean Allen, 5080 Roberts Drive, The Colony, submitted an online public comment regarding police enforcement of parking statutes.

2.) Ted Pielemeier, 6600 Alliance Drive, The Colony, spoke concerning flock cameras.

3.) Masood Sadrol-Ashrafi, 6713 Gray Wolf Dr, Plano spoke concerning street conditions around 6010 Mcafee Drive.

3.0 WORK SESSION

3.1 Council to provide direction to staff regarding future agenda items.
None

4.0 CONSENT AGENDA

Motion to approve all items from the Consent Agenda with the exception of Item No. 4.4- Judy Ensweiler, Councilmember; second by Dan Rainey, Councilmember, motion carried with all ayes.

4.1 Consider approving City Council Regular Session meeting minutes from October 20, 2026.

4.2 Consider approving a resolution authorizing the City Manager to execute a memorandum of understanding with the North Central Texas Trauma Regional Advisory Council for participation in the Whole Blood Pilot Program.

RESOLUTION NO. 2026-084

4.3 Consider approving a resolution authorizing the City Manager to execute a program participation and business associate agreement with the North Central Texas Trauma Regional Advisory Council for the participation in the Whole Blood Pilot Program.

RESOLUTION NO. 2026-085

******Item No. 4.4 was pulled from the Consent Agenda for separate discussion. ******

4.4 Consider approving a resolution authorizing expenditure authority for Camelot Landfill in an amount not to exceed $350,000.00 for the disposal of solid waste from the Wastewater Treatment Plant.
Public Works Director James Whitt presented the proposed resolution to council.

Council provided discussion on the item.

Motion to approve - Judy Ensweiler, Councilmember; second by Perry Schrag, Councilmember, motion carried with all ayes.

RESOLUTION NO. 2026-086

4.5 Consider approving a resolution authorizing the City Manager to participate in and execute any appropriate documentation related to the Albertsons Companies, Inc. Opioid Settlement brought by the State of Texas.

RESOLUTION NO. 2026-087

5.0 REGULAR AGENDA ITEMS

5.1 Conduct a public hearing, discuss, and consider an ordinance regarding a Specific Use Permit to allow Auto parts and accessory sales (inside only) at 4177 Main Street, Suite 200, approximately 2,060 square feet located within Planned Development 14 and Gateway Overlay District.
Planning Director Isaac Williams presented the proposed ordinance to council.

Council provided discussion on the item.

The public hearing was opened at 7:13 p.m. There being no speakers the public hearing was closed at 7:13 p.m.

Motion to approve - Perry Schrag, Councilmember; second by Brian R. Wade, Councilmember, motion carried with all ayes.

ORDINANCE NO. 2026-2666

5.2 Conduct a public hearing, discuss, and consider an ordinance regarding a Specific Use Permit to allow Retail Other (Precious Metals Coin Dealer) at 5000 Main Street Suite 203, approximately 924 square feet, located within the Shopping Center (SC) Zoning District and Gateway Overlay District.
Planning Director Isaac Williams presented the proposed ordinance to council.

Council provided discussion on the item.

The public hearing was opened at 7:28 p.m. There being no speakers the public hearing was closed at 7:28 p.m.

Motion to approve - Perry Schrag, Councilmember; second by Judy Ensweiler, Councilmember, motion carried with all ayes.

ORDINANCE NO. 2026-2667

5.3 Discuss and consider approving a resolution reappointing Jeremie Maurina as the City's representative and Stephen Christo as alternate on the Denton County Transportation Authority Board.

Motion to approve - Judy Ensweiler, Councilmember; second by Robyn Holtz, Deputy Mayor Pro Tem, motion carried with all ayes.

RESOLUTION NO. 2026-088

Executive Session was convened at 7:31 p.m.

6.0 EXECUTIVE SESSION

6.1 Council shall convene into a closed executive session pursuant to Sections 551.072 and 551.087 of the Texas Government Code to deliberate regarding purchase, exchange, lease or value of real property and commercial or financial information the city has received from a business prospect(s), and to deliberate the offer of a financial or other incentive to a business prospect(s).

6.2 Council shall convene into a closed executive session pursuant to Section 551.071 of the Texas Government Code to seek legal advice from the city attorney regarding pending or contemplated litigation: Comfort Suites, 4796 Memorial Drive, The Colony, Texas.

******Item No. 6.3 pulled from Executive Session with no discussion******

6.3 Council shall convene into a closed executive session pursuant to Section 551.071 of the Texas Government Code to receive legal advice from its attorney regarding pending litigation: TOCA Colony, LLC v. Blue Sky Sports Center, LP, and the City of The Colony, Texas.

Regular Session was reconvened at 7:57 p.m.

7.0 EXECUTIVE SESSION ACTION

7.1 Any action as a result of executive session regarding purchase, exchange, lease or value of real property and commercial or financial information the city has received from a business prospect(s), and the offer of a financial or other incentive to a business prospect(s).
No Action

7.2 Any action as a result of executive session regarding pending or contemplated litigation: Comfort Suites, 4796 Memorial Drive, The Colony, Texas.

Motion to authorize the City Attorney's Office to file a lawsuit against Comfort Suites Hotel located at 4796 Memorial Drive for delinquent hotel occupancy taxes on the terms as discussed in Executive Session - Joel Marks, Mayor Pro Tem; second by Judy Ensweiler, Councilmember, motion carried with all ayes.

7.3 Any action as a result of executive session regarding pending litigation: TOCA Colony, LLC v. Blue Sky Sports Center, LP, and the City of The Colony, Texas.

ADJOURNMENT

With there being no further business to discuss, the meeting adjourned at 8:00 p.m.

APPROVED:

_____

Richard Boyer, Mayor
City of The Colony, Texas

ATTEST:

_____

Tina Stewart, City Secretary, TRMC, CMC

Agenda Item No: 6.2

CITY COUNCIL Agenda Item Report

Meeting Date: November 17, 2026
Submitted By: Ana Alvarado
Submitting Department: Fire
Item Type: Resolution
Agenda Section: consent agenda

Suggested Action:
Consider approving a resolution authorizing the City Manager to award a purchase to Galls LLC in the amount of $118,503.00, utilizing BuyBoard contract number 773-25 for Fire Department uniforms. (Stephens)

Background:

Attachments:
Galls Purchase Order Memo to City Council.pdf
Galls TCFD Uniform Quote.pdf
Res. 2026-xxx - Galls LLC.docx

MEMORANDUM

CITY OF THE COLONY
FIRE DEPARTMENT

DATE: November 17, 2026

TO: Honorable Mayor Boyer and Members of City Council

FROM: Shannon Stephens, Fire Chief

SUBJECT: Authorization to Purchase Fire Department Uniforms from Galls, LLC through BuyBoard Contract No. 773-25

BACKGROUND

The Fire Department requests authorization to purchase uniforms from Galls, LLC through BuyBoard Contract Number 773-25. The purchase order is based on Galls Quote Number 33670341, dated October 27, 2026, in the amount of $118,503.00. Because of the amount, City Council approval is required.

The quote includes the following items, with embroidery and logo application where applicable:

1. 300 Blauer short-sleeve base shirts;
2. 300 Workrite Nomex IIIA industrial fire-resistant pants, including hemming;
3. 400 Short-sleeve department T-shirts;
4. 300 Sport-Tek knit shorts with department logo;
5. 100 Ebelco quarter-zip job shirts;
6. 100 Sport-tek sweatpants with department logo; and
7. 100 Blauer watch caps

FINANCIAL IMPACT

The total cost is $118,503.00, consisting of $117,993.00 in merchandise and $510.00 in shipping. Funding is available in the Fire Department's uniform line-item accounts in the current fiscal year budget. The quote is valid through November 26, 2026.

RECOMMENDATION

Staff recommends approval authorizing the City Manager to execute a purchase order with Galls, LLC for Fire Department uniforms through BuyBoard Contract No. 773-25 in an amount not to exceed $118,503.00.

Quote

Customer: (1002022019) THE COLONY FIRE DEPARTMENT
Date: 10/27/2026
Sales Rep: MEGAN WILLIAMS

Quote Number: 33670341
Quote Expiration: 11/26/2026

Sold To:
THE COLONY FIRE DEPT
4900 BLAIR OAKS DR
THE COLONY, TX 75056
SHANNON STEPHENS

Ship To:
THE COLONY FIRE DEPT
4900 BLAIR OAKS DR
THE COLONY, TX 75056
GREG CAMPBELL

Line	Item	Description	Qty	Retail	Your Price	Ext Total
1	SH5869 DKNV LG REG	BLAUER S/S FLEXPRO ARMORSKIN BASE SHIRT CONTRACT NUMBER:BUYBOARD 773-25	300		64.69	19,407.00
1.1	PEC03	3 LINE RIGHT CHEST EMBROIDERY CONTRACT NUMBER: INCIDENTAL	300		10.77	3,231.00
1.2	CE000	LOGO ONLY DESIGN CONTRACT NUMBER: INCIDENTAL	300			
1.3	EY31646	THE COLONY FIRE TXT CONTRACT NUMBER: INCIDENTAL	300		4.82	1,446.00
3	ZS796 NAV 34 OB	WORKRITE NOMEX IIIA INDUSTRIAL PANT FULLER CUT 402 CONTRACT DESC:BUYBOARD 773-25	300		169.97	50,991.00
3.1	HEM01	HEMMING CONTRACT NUMBER:BUYBOARD 773-25	300		6.17	1,851.00
4	TS4834 FNAV LG	THE COLONY FD PROFESSIONAL S/S T-SHIRT W QUOTE 656895 SCREENPRINT LC 16911, BK 16900	400		29.33	11,732.00
4.1	PEC03	3 LINE RIGHT CHEST EMBROIDERY CONTRACT NUMBER: INCIDENTAL	400		10.77	4,308.00
5	ST291Y NAV LG	THE COLONY FIRE DEPT SPORT-TEK JERSEY KNIT SHORT W/POCKETS W/LEFT LEG LOGO CONTRACT NUMBER:BUYBOARD 773-25	300		23.25	6,975.00
7	ST493 MDNV LG REG	ELBECO 1/4 ZIP JOB SHIRT W/SELF COLLAR CONTRACT NUMBER:BUYBOARD 773-25	100		86.29	8,629.00
7.1	PEC03	3 LINE RIGHT CHEST EMBROIDERY CONTRACT NUMBER: INCIDENTAL	100		10.77	1,077.00

Quote

Customer: (1002022019) THE COLONY FIRE DEPARTMENT
Date: 10/27/2026
Sales Rep: MEGAN WILLIAMS

Quote Number: 33670341
Quote Expiration: 11/26/2026

Sold To:
THE COLONY FIRE DEPT
4900 BLAIR OAKS DR
THE COLONY, TX 75056
SHANNON STEPHENS

Ship To:
THE COLONY FIRE DEPT
4900 BLAIR OAKS DR
THE COLONY, TX 75056
GREG CAMPBELL

Line	Item	Description	Qty	Retail	Your Price	Ext Total
7.2	CE000	LOGO ONLY DESIGN CONTRACT NUMBER: INCIDENTAL	100			
7.3	EY31646	THE COLONY FIRE TXT CONTRACT NUMBER: INCIDENTAL	100		4.82	482.00
9	ST288T NAV LG	THE COLONY FIRE DEPT SPORT-TEK MENS COTTON/POLY OB SWEATPANT W/LEFT LEG LOGO CONTRACT NUMBER:BUYBOARD 773-25	100		37.92	3,792.00
10	HA101 NAV	BLAUER WATCH CAP CONTRACT NUMBER:BUYBOARD 773-25	100		29.33	2,933.00
10.1	CE000	LOGO ONLY DESIGN CONTRACT NUMBER: INCIDENTAL	100			
10.2	EY09243	THE COLONY FIRE TEXT HAT CONTRACT NUMBER: INCIDENTAL	100		11.39	1,139.00

This quotation is valid for thirty (30) days from the date of issuance. Pricing is subject to adjustment at any time prior to acceptance in the event of material cost increases, including but not limited to new or revised tariffs or other external economic factors beyond the control of Galls, LLC.

SUBTOTAL: 117,993.00
SHIPPING: 510.00
TAX.....:
TOTAL...: 118,503.00

Galls is required to collect sales tax on shipments to certain states. Sales tax will be added where applicable. For tax exempt customers, state laws require us to have signed tax exemption or resale certificates on file at our office. If you are tax exempt, please email or fax this information, (including your Galls account number) to Tax@galls.com or fax 859-268-5946.

Export Restrictions - This may contain commodities restricted in the United States International Trade Regulations.

1340 Russell Cave Rd
Lexington, KY 40505
Tel: 800-876-4242 Fax:877-914-2557

Galls, LLC Invoice Credit Terms and Conditions of Sale

Payment - Invoices for items delivered pursuant to any sales order are payable only in United States currency. You, your business, and/or your agency (the "Buyer") understand that Galls, LLC (the "Seller") may impose and charge a finance charge that is the greater of 1.5% per month or the highest rate allowed by law on any amount which becomes past due and delinquent. Returned checks may be assessed a $25.00 service fee. Additionally, Buyer shall be responsible for all collection costs, court costs, and reasonable attorney's fees in connection with the recovery of delinquent amounts.

All sales are made pursuant to these Credit Terms and Conditions of Sale, and Seller objects to any different or additional terms or conditions contained in Buyer's purchase order or any other document submitted by Seller. Payments may be applied against open balances at the sole discretion of Seller and may be applied across accounts if Buyer has more than one account with Seller. Credit memos are non-refundable and may be applied to open invoices at Seller's sole discretion.

Credit Terms - Any extension of credit is based upon all amounts payable on or before the due date on any written, quoted, or agreed terms, and shall be paid in accordance with such terms. If not paid on or before such date, accounts shall be considered delinquent and subject to the additional finance charges as set forth herein.

Buyer agrees to provide Seller, upon request, with an updated credit application as a condition to the continued extension of credit. Buyer acknowledges and agrees that Seller may utilize outside credit reporting services and financial institutions to obtain information on the Buyer as a condition precedent to or for continued extension of credit. Seller may terminate any credit availability within its sole discretion and without prior notice. Buyer's continued solvency is a precondition to any sale made by Seller.

Delays - Where a specific shipping date is not designated on the face hereof or in a subsequent writing signed by the Seller, the Seller shall not be responsible for any delays, nor shall Seller be liable for any loss or damages resulting from such delays. Seller shall not be liable for any delays in filling this order caused by accidents to machinery, differences with employees, strikes, labor shortage, fire, floods, priorities requested or required by an instrumentality of the United States Government or the government of any state, delays in transportation, restrictions imposed by any federal, state or municipal law or regulation, whether valid or invalid, or causes beyond the control of the Seller.

Warranty - Seller shall pass through to Buyer all manufacturer warranties and return policies applicable to Buyer's order. Seller shall take all reasonable actions to ensure that Buyer receives the benefit of such pass through warranties and return policies. Buyer's sole remedies for any goods sold hereunder shall be as provided in such warranties and return policies and shall be solely against the applicable manufacturer. SELLER, ON BEHALF OF ITSELF, DISCLAIMS ALL WARRANTIES, WHETHER EXPRESS, IMPLIED, OR STATUTORY, RELATING TO SUCH GOODS.

Restocking - If a cancellation of an order or a return by Buyer is accepted or initiated by Seller and/or the manufacturer, it may be subject to a restocking charge at the discretion of Seller.

Delivery and Transportation - Products sold herein are sold FOB at the place indicated on the face of this sales order unless otherwise agreed to in writing by Seller and Buyer. The method and agency of transportation and the routing will be designated by the Seller. In the event the Buyer requests alternative shipment or routing, all extra packing, shipping and transportation charges thereby resulting will be for the Buyer's account.

Waiver - No provision herein shall be deemed a waiver by reason of any previous waiver, and no breach of any provision shall be deemed a waiver by reason of any previous breach.

Governing Law - The sole jurisdiction and venue shall be the courts of the Commonwealth of Kentucky.

Export Restrictions - This transaction may contain commodities restricted in the United States International Trade Regulations. If at a later date the Buyer decides these commodities will be exported from the United States please reference the United States Department of Commerce Bureau of Industry and Security Export Administration Regulations (15 CFR 730-774), the United States Department of State International Traffic in Arms Regulations (22 CFR 120-130) as well as any other applicable laws. These laws apply to private, commercial, and government agency export transactions. As an exporter, the Buyer will be responsible for compliance with all U.S. laws relating to the export of these items.

*Designates this item is on the Galls GSA Contract (47QSWA21D008H) all other items are OPEN MARKET.

CITY OF THE COLONY, TEXAS

RESOLUTION NO. 2026 - _____

A RESOLUTION OF THE CITY COUNCIL OF THE CITY OF THE COLONY, TEXAS, AUTHORIZING THE CITY MANAGER TO AWARD A PURCHASE TO GALLS LLC FOR FIRE DEPARTMENT UNIFORMS; AND PROVIDING AN EFFECTIVE DATE.

NOW, THEREFORE, BE IT RESOLVED BY THE CITY COUNCIL OF THE CITY OF THE COLONY, TEXAS, THAT:

Section 1. That the City Council of the City of The Colony, Texas hereby authorizes the City Manager to award a purchase to Galls LLC in the amount of $118,503.00 for Fire Department uniforms utilizing BuyBoard contract number 773-25.

Section 2. That the City Manager and/or his designee are authorized to award said purchase.

Section 3. This resolution shall take effect immediately from and after its passage.

PASSED AND APPROVED BY THE CITY COUNCIL OF THE CITY OF THE COLONY, TEXAS, THIS 17TH DAY OF NOVEMBER 2026.

_____
Richard Boyer, Mayor
City of The Colony, Texas

ATTEST:

_____
Tina Stewart, City Secretary, TRMC, CMC

APPROVED AS TO FORM:

_____
Jeffrey L. Moore, City Attorney

Agenda Item No: 6.3

CITY COUNCIL Agenda Item Report

Meeting Date: November 17, 2026
Submitted By: Ana Alvarado
Submitting Department: Parks & Recreation
Item Type: Resolution
Agenda Section: consent agenda

Suggested Action:
Consider approving a resolution authorizing the City Manager to award a contract to Regional Railroad Safety Services, LLC, for mowing services in an annual amount not to exceed $238,630.32. (Townley)

Background:
Award a two-year contract to Regional Railroad Safety Services, LLC, for mowing services, with three additional one-year renewal options. The City issued a competitive solicitation that closed on October 15, 2026, and received twelve submissions. Following evaluation, Regional Railroad Safety Services, LLC was determined to be the lowest responsible bidder.

Attachments:
Bid Submisssion Detail_RRS.pdf
Res. 2026-xxx - Regional Railroad Services, LLC.doc

Submission

Bidder Details

Vendor Name	Regional Railroad Safety Services, LLC
Address	1700 Pacific Ave 1220 Dallas, Texas 75201 United States
Respondee	Stephanie Lofton
Respondee Title	Owner
Phone	972-460-0931
Email	amber@regionalflaggingdfw.com
Vendor Type	
License #	

Submission Detail

Submission Format	Electronic
Submitted	10/14/2026 11:18 AM (CDT)
Delivery Method	
Responsive	
Submission Status	Submitted
Confirmation #	512521

Respondee Comment

Buyer Comment

Attachments

File Title	File Name	File Type
COLONY52.pdf	COLONY52.pdf	Response File

Line Items

Discount Terms No Discount

Item #	Item Code	Type	Item Description	UOM	QTY	Unit Price	Line Total	Response	Comment
Imported Items							$238,630.32		
1			Recreation Center/PD/Kids Colony - 5.94 Acres	Cycle	36	$320.76	$11,547.36	Yes	
2			Augusta Community Center - 6.58 Acres	Cycle	36	$355.32	$12,791.52	Yes	
3			Lion's Club Park - 6.29 Acres	Cycle	36	$301.92	$10,869.12	Yes	
4			Ridgepointe Park/Sarasota Alley - 1.51 Acres	Cycle	36	$81.54	$2,935.44	Yes	
5			Scout Park - 4.01 Acres	Cycle	36	$216.54	$7,795.44	Yes	
6			Friendship Park - 1.51 Acres	Cycle	36	$81.54	$2,935.44	Yes	
7			Carr/Chapman Park - 1.17 Acres	Cycle	36	$63.18	$2,274.48	Yes	
8			Slay/Baker Park - 2.01 Acres	Cycle	36	$108.54	$3,907.44	Yes	
9			Bill Allen Park - 15.1 Acres	Cycle	36	$702.15	$25,277.40	Yes	
10			Aquatic Park - 1.28 Acres	Cycle	36	$108.80	$3,916.80	Yes	
11			Stewart Creek Park - 32.18 Acre	Cycle	36	$1,496.37	$53,869.32	Yes	
12			Animal Shelter - 0.43 Acres	Cycle	36	$32.25	$1,161.00	Yes	
13			Pawsome Playground Dog Park - 0.72 Acres	Cycle	36	$38.88	$1,399.68	Yes	
14			CVB - 0.1 Acres	Cycle	36	$11.00	$396.00	Yes	
15			Library/Annex - 0.53 Acres	Cycle	36	$39.75	$1,431.00	Yes	
16			Government Center - 1.81 Acres	Cycle	36	$135.75	$4,887.00	Yes	
17			City Hall - 0.88 Acres	Cycle	36	$66.00	$2,376.00	Yes	
18			Hawaiian Waters - 3.74 Acres	Cycle	36	$201.96	$7,270.56	Yes	
19			Five Star Veterans Trail - 4.53 Acres	Cycle	36	$217.44	$7,827.84	Yes	
20			Chowning Cir. - 0.03 Acres	Cycle	36	$3.30	$118.80	Yes	
21			Cedar Ridge Ct. - 0.11 Acres	Cycle	36	$12.10	$435.60	Yes	
22			Hamilton Ct. - 0.04 Acres	Cycle	36	$4.40	$158.40	Yes	
23			Plano Pkwy. - 0.27 Acres	Cycle	36	$29.70	$1,069.20	Yes	
24			Lakeshore Blvd./Lake Ridge Alley - 0.26 Acres	Cycle	36	$28.60	$1,029.60	Yes	
25			Standridge Dr. - 0.06 Acres	Cycle	36	$6.60	$237.60	Yes	
26			Memorial Dr. West - 1.9 Acres	Cycle	36	$111.15	$4,001.40	Yes	
27			Memorial Dr. East - 7.28 Acres	Cycle	36	$425.88	$15,331.68	Yes	
28			Morning Star - 0.53 Acres	Cycle	36	$31.01	$1,116.36	Yes	
29			South Colony Blvd. East - 1.35 Acres	Cycle	36	$78.98	$2,843.28	Yes	
30			South Colony Blvd. Extension - 0.57 Acres	Cycle	36	$33.35	$1,200.60	Yes	
31			North Colony Blvd. West - 2.21 Acres	Cycle	36	$129.29	$4,654.44	Yes	
32			North Colony Blvd. East - 6.02 Acres	Cycle	36	$352.17	$12,678.12	Yes	
33			Paige Rd. - 0.18 Acres	Cycle	36	$10.53	$379.08	Yes	
34			Blair Oaks Dr. - 0.69 Acres	Cycle	36	$40.37	$1,453.32	Yes	
35			F.M. 423/Main St. - 11 Acres	Cycle	36	$643.50	$23,166.00	Yes	
36			Fire Station #5 - 2 Acres	Cycle	36	$108.00	$3,888.00	Yes	

Line Item Subtotals

Section Title	Line Total
Imported Items	**$238,630.32**
Grand Total	**$238,630.32**

provide the basis for any claimed exception. The City will make determinations concerning disclosure in accordance with applicable law.

The City reserves all rights provided by applicable law and the solicitation documents, including the right to reject any or all bids, waive informalities, cancel or postpone the solicitation, and accept the bid determined to be in the City's best interest.

The Bidder shall provide the following information through the electronic solicitation and/or the form below, as directed by the City.

Legal Business Name	Regional Railroad Safety Services, DBA Apex Commercial Landscape & General Contracting
Business Address	1700 Pacific Ave #1220
City / State / ZIP	Dallas Tx 75201
Primary Contact	Stephanie Lofton
Telephone	972-460-0931
Email Address	slofton@regionalflaggingdfw.com
Federal Tax Identification Number	87-4692644

By signing below, the undersigned certifies that the Bidder has examined the solicitation documents, acknowledges applicable addenda, understands the requirements, and agrees that the bid is submitted in good faith and without collusion.

Authorized Representative	Stephanie Lofton
Title	Owner
Signature	
Date	10-12-2026
Printed Name	Stephanie Lofton

The Bidder acknowledges receipt of all addenda issued for this solicitation. Addenda shall be acknowledged electronically in PlanetBids when required.

The following forms or certifications shall be completed and submitted when identified as applicable to the solicitation. Purchasing may require additional forms based on the nature, value, funding source, or legal requirements of a particular procurement.

Form / Certification	Applicability	Submitted / Acknowledged
Non-Collusion Certification	Required as specified by the solicitation.	☒ Yes ☐ N/A
State Reciprocal Requirement	n/a	☒ Yes ☐ N/A
Conflict of Interest Questionnaire (CIQ)	Required	☒ Yes ☐ N/A

Certificate of Interested Parties (Form 1295)	Required when applicable under Texas Government Code Chapter 2252, Subchapter C.	☒ Yes ☐ N/A
House Bill 89 / Boycott Israel Verification	Required.	☒ Yes ☐ N/A
Other Statutory / Funding Certification	n/a	☒ Yes ☐ N/A

The undersigned certifies that the bid has not been prepared in collusion with any other bidder or individual engaged in the same line of business; that the Bidder has not directly or indirectly induced or solicited another bidder to submit a false or sham bid; has not solicited or induced any person or firm to refrain from bidding; and has not sought by collusion to obtain an advantage over another bidder or the City.

Authorized Signature: _____ Date: 10-12-2026

The City prohibits City officers and employees from having prohibited financial interest in City contracts. The Successful Bidder shall provide the State of Texas Conflict of Interest Questionnaire (Form CIQ) when required by applicable law.

When applicable, the Successful Bidder shall complete and file the Certificate of Interested Parties (Form 1295) with the Texas Ethics Commission and provide the completed certification to the City in accordance with applicable requirements.

When applicable, the Successful Bidder shall provide the City's required verification concerning the company's compliance with Texas Government Code Chapter 2271.

Authorized Signature	
Title	Owner
Printed Name	Stephanie Lofton
Date	10-12-2026

The resulting contract shall consist of the executed agreement and documents incorporated by reference, including the solicitation, specifications/scope of work, electronic bid schedule, addenda, applicable certifications, and other documents identified by the City.

No oral statement shall modify the terms of the resulting contract. Changes shall be made in writing and executed by authorized representatives of the parties.

CITY OF THE COLONY

DENTON COUNTY, TEXAS

BID NO. 59-26-12

ANNUAL MOWING, LANDSCAPE AND MAINTENANCE CONTRACT

BOYCOTT ISRAEL CERTIFICATION

Texas Government Code § 2271.002

Pursuant to Section 2271.002 of the Texas Government Code, the undersigned certifies that the company identified below does not boycott Israel and will not boycott Israel during the term of any contract resulting from this solicitation, to the extent the certification is required by applicable law.

APPLICABILITY

This certification requirement applies only to a contract between a governmental entity and a company with 10 or more full-time employees when the contract has a value of $100,000 or more and is to be paid wholly or partly from public funds. A sole proprietorship is not included in the statutory definition of "company" for this purpose.

CERTIFICATION

☒ REQUIRED CERTIFICATION — The undersigned certifies that the company does not boycott Israel and will not boycott Israel during the term of the contract resulting from this solicitation.

☐ CERTIFICATION NOT REQUIRED — The undersigned certifies that the requirements of Texas Government Code § 2271.002 do not apply to the contract resulting from this solicitation.

If certification is not required, briefly state the basis:

_____

_____

_____

BIDDER / COMPANY INFORMATION

Company Legal Name:	Regional Railroad Safety Services, LLC DBA Apex Commercial Landscape & General Contracting
Authorized Representative:	Stephanie Lofton
Title:	Owner
Signature:	
Date:	10-12-2026

STATUTORY REFERENCE

Texas Government Code Chapter 2271, including § 2271.002. The certification language above is intended for use in connection with Bid No. 59-26-12 and does not modify the requirements of the Texas Government Code.

CERTIFICATE OF INTERESTED PARTIES

FORM 1295

Complete Nos. 1 - 4 and 6 if there are interested parties.
Complete Nos. 1, 2, 3, 5, and 6 if there are no interested parties.

OFFICE USE ONLY
CERTIFICATION OF FILING

Certificate Number:
2026-1527489

Date Filed:
10/12/2026

Date Acknowledged:

1 Name of business entity filing form, and the city, state and country of the business entity's place of business.
Regional Railroad Safety Services, LLC DBA Apex Commerical Landscape & General
Dallas, TX United States

2 Name of governmental entity or state agency that is a party to the contract for which the form is being filed.
City of the Colony

3 Provide the identification number used by the governmental entity or state agency to track or identify the contract, and provide a description of the services, goods, or other property to be provided under the contract.
59-263-12
Annual Mowing, Landscape and Maintenance

4 Name of Interested Party	City, State, Country (place of business)	Nature of interest (check applicable)	
		Controlling	Intermediary

5 Check only if there is NO Interested Party. [X]

6 UNSWORN DECLARATION

My name is Stephanie Lofton, and my date of birth is 5-28-1974.

My address is 1700 Pacific Ave #1220, Dallas (city), TX (state), 75201 (zip code), USA (country).

I declare under penalty of perjury that the foregoing is true and correct.

Executed in Dallas County, State of TX, on the 12 day of Oct (month), 20 26 (year).

Signature of authorized agent of contracting business entity
(Declarant)

CONFLICT OF INTEREST QUESTIONNAIRE

FORM CIQ

For vendor doing business with local governmental entity

This questionnaire reflects changes made to the law by H.B. 23, 84th Leg., Regular Session.

This questionnaire is being filed in accordance with Chapter 176, Local Government Code, by a vendor who has a business relationship as defined by Section 176.001(1-a) with a local governmental entity and the vendor meets requirements under Section 176.006(a).

By law this questionnaire must be filed with the records administrator of the local governmental entity not later than the 7th business day after the date the vendor becomes aware of facts that require the statement to be filed. *See* Section 176.006(a-1), Local Government Code.

A vendor commits an offense if the vendor knowingly violates Section 176.006, Local Government Code. An offense under this section is a misdemeanor.

OFFICE USE ONLY

Date Received

1 **Name of vendor who has a business relationship with local governmental entity.**

Regional Railroad Safety Services, LLC DBA Apex Commercial Landscape & General Contracting

2 ☐ **Check this box if you are filing an update to a previously filed questionnaire.** (The law requires that you file an updated completed questionnaire with the appropriate filing authority not later than the 7th business day after the date on which you became aware that the originally filed questionnaire was incomplete or inaccurate.)

3 **Name of local government officer about whom the information is being disclosed.**

_____

Name of Officer

4 **Describe each employment or other business relationship with the local government officer, or a family member of the officer, as described by Section 176.003(a)(2)(A). Also describe any family relationship with the local government officer. Complete subparts A and B for each employment or business relationship described. Attach additional pages to this Form CIQ as necessary.**

A. Is the local government officer or a family member of the officer receiving or likely to receive taxable income, other than investment income, from the vendor?

☐ Yes ☐ No

B. Is the vendor receiving or likely to receive taxable income, other than investment income, from or at the direction of the local government officer or a family member of the officer AND the taxable income is not received from the local governmental entity?

☐ Yes ☐ No

5 **Describe each employment or business relationship that the vendor named in Section 1 maintains with a corporation or other business entity with respect to which the local government officer serves as an officer or director, or holds an ownership interest of one percent or more.**

6 ☐ Check this box if the vendor has given the local government officer or a family member of the officer one or more gifts as described in Section 176.003(a)(2)(B), excluding gifts described in Section 176.003(a-1).

7

Stephanie Lofton
Name of signatory

Signature

10-12-2026
Date

Form **W-9**
(Rev. March 2024)
Department of the Treasury
Internal Revenue Service

Request for Taxpayer Identification Number and Certification

Go to *www.irs.gov/FormW9* for instructions and the latest information.

Give form to the requester. Do not send to the IRS.

Before you begin. For guidance related to the purpose of Form W-9, see *Purpose of Form*, below.

Print or type. See *Specific Instructions* on page 3.

1 Name of entity/individual. An entry is required. (For a sole proprietor or disregarded entity, enter the owner's name on line 1, and enter the business/disregarded entity's name on line 2.)
Regional Railroad Safety Services, LLC

2 Business name/disregarded entity name, if different from above.
Apex Commercial Landscape & General Contracting

3a Check the appropriate box for federal tax classification of the entity/individual whose name is entered on line 1. Check only **one** of the following seven boxes.

☐ Individual/sole proprietor ☐ C corporation ☐ S corporation ☐ Partnership ☐ Trust/estate

☒ LLC. Enter the tax classification (C = C corporation, S = S corporation, P = Partnership) . . . . . P

Note: Check the "LLC" box above and, in the entry space, enter the appropriate code (C, S, or P) for the tax classification of the LLC, unless it is a disregarded entity. A disregarded entity should instead check the appropriate box for the tax classification of its owner.

☐ Other (see instructions)

4 Exemptions (codes apply only to certain entities, not individuals; see instructions on page 3):

Exempt payee code (if any)

Exemption from Foreign Account Tax Compliance Act (FATCA) reporting code (if any)

(Applies to accounts maintained outside the United States.)

3b If on line 3a you checked "Partnership" or "Trust/estate," or checked "LLC" and entered "P" as its tax classification, and you are providing this form to a partnership, trust, or estate in which you have an ownership interest, check this box if you have any foreign partners, owners, or beneficiaries. See instructions . . . . . ☐

5 Address (number, street, and apt. or suite no.). See instructions.
1700 Pacific Ave #1220

Requester's name and address (optional)

6 City, state, and ZIP code
Dallas Tx 75201

7 List account number(s) here (optional)

Part I Taxpayer Identification Number (TIN)

Enter your TIN in the appropriate box. The TIN provided must match the name given on line 1 to avoid backup withholding. For individuals, this is generally your social security number (SSN). However, for a resident alien, sole proprietor, or disregarded entity, see the instructions for Part I, later. For other entities, it is your employer identification number (EIN). If you do not have a number, see *How to get a TIN*, later.

Note: If the account is in more than one name, see the instructions for line 1. See also *What Name and Number To Give the Requester* for guidelines on whose number to enter.

Social security number
[ ][ ][ ] - [ ][ ] - [ ][ ][ ][ ]

or

Employer identification number
8 7 - 4 6 9 2 6 4 4

Part II Certification

Under penalties of perjury, I certify that:

1. The number shown on this form is my correct taxpayer identification number (or I am waiting for a number to be issued to me); and
2. I am not subject to backup withholding because (a) I am exempt from backup withholding, or (b) I have not been notified by the Internal Revenue Service (IRS) that I am subject to backup withholding as a result of a failure to report all interest or dividends, or (c) the IRS has notified me that I am no longer subject to backup withholding; and
3. I am a U.S. citizen or other U.S. person (defined below); and
4. The FATCA code(s) entered on this form (if any) indicating that I am exempt from FATCA reporting is correct.

Certification instructions. You must cross out item 2 above if you have been notified by the IRS that you are currently subject to backup withholding because you have failed to report all interest and dividends on your tax return. For real estate transactions, item 2 does not apply. For mortgage interest paid, acquisition or abandonment of secured property, cancellation of debt, contributions to an individual retirement arrangement (IRA), and, generally, payments other than interest and dividends, you are not required to sign the certification, but you must provide your correct TIN. See the instructions for Part II, later.

Sign Here | **Signature of U.S. person** [signature] **Date** 10-1-2026

General Instructions

Section references are to the Internal Revenue Code unless otherwise noted.

Future developments. For the latest information about developments related to Form W-9 and its instructions, such as legislation enacted after they were published, go to *www.irs.gov/FormW9*.

What's New

Line 3a has been modified to clarify how a disregarded entity completes this line. An LLC that is a disregarded entity should check the appropriate box for the tax classification of its owner. Otherwise, it should check the "LLC" box and enter its appropriate tax classification.

New line 3b has been added to this form. A flow-through entity is required to complete this line to indicate that it has direct or indirect foreign partners, owners, or beneficiaries when it provides the Form W-9 to another flow-through entity in which it has an ownership interest. This change is intended to provide a flow-through entity with information regarding the status of its indirect foreign partners, owners, or beneficiaries, so that it can satisfy any applicable reporting requirements. For example, a partnership that has any indirect foreign partners may be required to complete Schedules K-2 and K-3. See the Partnership Instructions for Schedules K-2 and K-3 (Form 1065).

Purpose of Form

An individual or entity (Form W-9 requester) who is required to file an information return with the IRS is giving you this form because they

Company Profile and Qualifications

Legal/Operating Name: APEX Commercial Landscape and General Contracting
Business Address: 1700 Pacific Ave Ste 1220 Dallas Tx 75201
Company Phone: 972-460-0931
Year Established: 2022
Primary Contact and Title: Stephanie Lofton, Owner
Number of Employees: 23

Qualified Supervisor and Experienced Personnel

Qualified Landscape Supervisor: Stephanie Lofton

Years of Experience: 13

Apex Commercial Landscape and General Contracting will designate a qualified supervisor to oversee and coordinate all work performed under the City of the Colony Annual Mowing, Landscape, and Maintenance. The designated supervisor will be responsible for:

- Supervising daily landscape maintenance and mowing operations.
- Coordinating crew assignments, schedules, and work activities.
- Monitoring work quality to ensure services meet the City's specifications and contract requirements.
- Ensuring personnel follow applicable safety procedures and proper equipment operating practices.
- Inspecting completed work to confirm mowing, trimming, edging, and cleanup requirements are met.
- Communicating with the City's designated representative regarding scheduling, work progress, and any service- related concerns.
- Ensuring assigned personnel have the appropriate training and qualifications for their duties.

Qualified and Trained Maintenance Personnel

Apex Commercial Landscape and General Contracting will provide sufficient qualified, trained, and capable personnel to perform the services required under the contract. Crew members will be assigned responsibilities based on their experience, training, and ability to perform the required tasks. Work crews will be organized to support timely completion of scheduled maintenance, consistent service quality, and compliance with applicable safety requirements.

Apex will provide appropriate supervision, equipment, and personnel coordination to support contract performance and address the City's maintenance requirements. The company will maintain adequate staffing to complete assigned work within the required schedules and will coordinate personnel assignments to minimize interruptions.

Current/Past Commercial Accounts

1. DART

Blue Line Maintenance

R Stagner/972-561-8583

2. City of Dallas

Public Library Mowing Contract

Jose Alvarado/214-671-1958

3. Bonton Wellness Center

General Landscape Maintenance

214-777-7703

LIST OF MACHINERY AND EQUIPMENT

UNIT	TYPE OF EQUIPMENT
2	Bad boy sub compact powerhouse utility tractor
1	Befco 72' cyclone C50 shredder/grooming mower
1	Befco 60' cyclone C30 shredder/grooming mower
1	Kubota TRABX9 60' zero turn mower
1	Lazer Z series 60' zero turn mower
1	Quest S series 54' zero turn mower
1	Exmark radius E series 60' zero turn mower
1	Exmark radius X series 48' zero turn
3	21X series 21' walk behind mower
4	30V series 30' walk behind mower
3	Schroder 6400L backpack blower
2	STIHL Magnum backpack blower
3	Echo Backpack blower
2	Husqvarna string trimmer
2	Echo brush cutter
3	STIHL FS string trimmer
6	HDX 5 gal sprayer
2	Workhorse 15 gal trailer sprayer
3	Commercial heavy duty utility trailer
3	F-250 work truck

Texas Department of Transportation

CERTIFICATE OF INSURANCE FOR SERVICES

P.O. No. 59-26-12

Vendor Point of Contact (Employee Contact for the Insured Party, Not the Insurance Agent):

Name: Tamika Grant Telephone: 972-207-0638 Email: tamika@regionalflaggingdfw.com

This certificate of insurance is provided for informational purposes only. This certificate does not confer any rights or obligations other than the rights and obligations conveyed by the policies referenced on this certificate. The terms of the referenced policies control over the terms of this certificate.

Prior to the beginning of work, the vendor shall obtain the minimum insurance and endorsements specified. Agents must complete the form providing all requested information and submit by fax, U.S. mail or e-mail as requested by TxDOT. Copies of endorsements listed below are not required as attachments to this certificate. Only certificates of insurance published by TxDOT are acceptable as proof of insurance. Commercial carriers' certificates are unacceptable.

Insured: Regional Railroad Safety Services LLC

Street/Mailing Address: 100 Country Ridge Ct

City: Red Oak State: Texas Zip Code: 75154

Phone Number: 972-849-0659 Federal EIN Number (9 digits): 87-4692644

Workers' Compensation Insurance Coverage:

Endorsed with a Waiver of Subrogation in favor of TxDOT.

Carrier Name: Texas Mutual Insurance Company			Carrier Phone Number: 1-800-859-5995	
Address: 2200 Aldrich St.,			City: Austin	State: TX Zip: 78723
Type of Insurance	Policy Number	Effective Date	Expiration Date	Enter Limits of Liability
Workers' Compensation	0002123511	02/12/26	02/12/27	$1,000,000/$1,000,000 /1,000,000
DO NOT COMPLETE THIS FORM UNLESS WORKERS' COMPENSATION IS ENDORSED WITH A WAIVER OF SUBROGATION IN FAVOR OF TxDOT.				

Commercial General Liability Insurance:

Endorsed with TxDOT as Additional Insured and with a Waiver of Subrogation in favor of TxDOT.

Carrier Name: Aspen Specialty Insurance Company			Carrier Phone Number: 818-251-3506	
Address: 499 Washington Boulevard, 8th Floor			City: Jersey City	State: NJ Zip: 07310
Type of Insurance	Policy Number	Effective Date	Expiration Date	Enter Limits of Liability
Commercial General Liability including: Bodily Injury Property Damage	RG013NV26	02/12/26	02/12/27	$1,000,000 Each Occurrence$50,000 Damage To Rented Premises$5000.00 MED EXP$1,000,000 Personal & ADV Injury$2,000,000 General Aggregate $2,000,000 Products-COMP/OP AGG
DO NOT COMPLETE THIS FORM UNLESS OTHER INSURANCE COVERAGE (i.e. GARAGE KEEPERS INSURANCE, OR OTHER) INCLUDES ADDITIONAL INSURED AND WAIVER OF SUBROGATION ENDORSMENTS IN FAVOR OF TxDOT.				

Commercial Automobile Insurance:

Endorsed with TxDOT as Additional Insured and with a Waiver of Subrogation in favor of TxDOT.

Carrier Name: Aspen American Insurance Company			Carrier Phone Number: 818-251-3506	
Address: 400 Capital Boulevard Suite 200			City: Rocky Hill	State: CT Zip: 06067
Type of Insurance	Policy Number	Effective Date	Expiration Date	Enter Limits of Liability
Commercial Automobile Bodily Injury Property Damage	RG013NV26	02/12/26	02/12/27	$1,000,000 Hired Auto Liability $1,000,000 Non-Owned Auto Liability
DO NOT COMPLETE THIS FORM UNLESS COMMERCIAL AUTOMOBILE LIABILITY INSURANCE INCLUDES ADDITIONAL INSURED AND WAIVER OF SUBROGATION ENDORSMENTS IN FAVOR OF TxDOT.				

Other Insurance Coverage: i.e. Garage keepers insurance, or other.
Endorsed with TxDOT as Additional Insured and with a Waiver of Subrogation in favor of TxDOT.

Carrier Name: Aspen Specialty Insurance Company			Carrier Phone Number: 818-251-3506		
Address: 499 Washington Boulevard, 8th Floor			City: Jersey City	State: NJ	Zip: 07310
Type of Insurance	Policy Number	Effective Date	Expiration Date	Enter Limits of Liability	
Excess Liability	RX013PT26	02/12/26	02/12/27	$2,000,000/$2,000,000	
DO NOT COMPLETE THIS FORM UNLESS OTHER INSURANCE COVERAGE (i.e. GARAGE KEEPERS INSURANCE, OR OTHER) INCLUDES ADDITIONAL INSURED AND WAIVER OF SUBROGATION ENDORSMENTS IN FAVOR OF TxDOT.					

AGENT CERTIFICATION

THIS IS TO CERTIFY to TxDOT, acting on behalf of the State of Texas, that the insurance policies above are in full force and effect.

Name of Insurance Company: Hibbs Hallmark & Company
Company Address: 6750 Hillcrest Plaza Dr., Ste 313
City: Dallas State: TX Zip: 75230
Authorized Agent's Phone Number
Area Code (972) 354-2917

Name of Authorized Agent: Robert Hunt
Agent's Address: 6750 Hillcrest Plaza Dr., Ste 313
City: Dallas State: TX Zip: 75230
Original Signature of Authorized Agent
Robert Hunt 8/11/26
Date

CITY OF THE COLONY, TEXAS

RESOLUTION NO. 2026 - _____

A RESOLUTION OF THE CITY COUNCIL OF THE CITY OF THE COLONY, TEXAS, AUTHORIZING THE CITY MANAGER TO AWARD A CONTRACT TO REGIONAL RAILROAD SERVICES, LLC FOR MOWING SERVICES; AND PROVIDING AN EFFECTIVE DATE

WHEREAS, the City Council of the City of The Colony, Texas hereby authorizes the City Manager to execute a contract with Regional Railroad Services, LLC for mowing services; and

WHEREAS, with this contract, the City of The Colony is agreeing to the services not to exceed the amount of $238,630.32.

NOW, THEREFORE, BE IT RESOLVED BY THE CITY COUNCIL OF THE CITY OF THE COLONY, TEXAS, THAT:

Section 1. The Contract, having been reviewed by the City Council of the City of The Colony, Texas, and found to be acceptable and in the best interest of the City and its citizens, be, and the same is hereby, in all things approved.

Section 2. The City Manager is hereby authorized to execute the contract on behalf of the City of The Colony, Texas, with the terms and conditions stated therein.

Section 3. This Resolution shall take effect immediately from and after its adoption and it is so resolved.

PASSED AND APPROVED BY THE CITY COUNCIL OF THE CITY OF THE COLONY, TEXAS THIS 17TH DAY OF NOVEMBER 2026.

_____
Richard Boyer, Mayor
City of The Colony, Texas

ATTEST:

_____
Tina Stewart, City Secretary, TRMC, CMC

APPROVED AS TO FORM:

_____
Jeffrey L. Moore, City Attorney

Agenda Item No: 6.4

CITY COUNCIL Agenda Item Report

Meeting Date: November 17, 2026
Submitted By: Ana Alvarado
Submitting Department: Parks & Recreation
Item Type: Resolution
Agenda Section: consent agenda

Suggested Action:
Discuss and consider approving a resolution authorizing the City Manager to execute a contract with NGU Sports Lighting, LLC for the purchase and installation of LED lighting fixtures and poles for the B.B. Owen Park Project, utilizing TIPS Contract # 23010402, in an amount not to exceed $480,000.00 to be funded by the Community Development Corporation. (Lehmann)

Background:

Attachments:
CITY_MEMO_NGU_BB_OWEN_LIGHTING_UPGRADES.pdf
City of The Colony B.B. Owen Park.pdf
Res. 2026-xxx - NGU Sports Lighting, LLC.doc

AGENDA ITEM

TO:	Mayor and City Council, City Manager & CDC
DATE SUBMITTED:	11/06/2026
MEETING DATE:	11/17/2026
SUMMARY OF REQUEST:	Consider approving a resolution authorizing the City Manager to execute TIPS Contract #23010402 with NGU Sports Lighting, LLC for sports lighting upgrades at B.B. Owen Park in the amount not to exceed $480,000.00.

Background:

This upgrade is part of the renovation to B.B. Owen Park Project. NGU Sports Lighting completed a site assessment at B.B. Owen Park and has submitted the attached proposal through TIPS Contract #23010402 for sports lighting at the baseball/softball field and the redesigned multipurpose field. Ordering now prevents cost increases and factors in lead times. The proposal includes a retrofit of the existing baseball/softball field lighting and new construction lighting at the multipurpose field, using LED fixtures and AirMesh wireless controls with remote access. This is the current standard we have upgraded other facilities to over the years.

The new LED system will improve light levels and uniformity across both fields, eliminate dark spots, and give staff the ability to schedule, dim, and control lighting remotely to reduce energy use.

Scope of Work:

- Baseball/softball field retrofit: Reuse the existing six (6) poles, crossarms, and electrical, and install new Ephesus LED luminaires. Design light levels are 50 footcandles (infield) and 27 footcandles (outfield).

- Multipurpose field new construction: Remove the six (6) existing poles and install four (4) new 60-foot poles with crossarms and Ephesus LED luminaires, tying into new electrical at each pole location. Design light level is 29 footcandles for multi-sport use.

- Controls: Furnish an AirMesh Hub and commission all fixtures into a wireless controls network with pre-set scenes, scheduling, individual fixture dimming, and five (5) years of remote cloud access.

- Design, warranty, and training: Lighting design, aiming diagram, project management, and end-user training are included, along with a 10-year material and labor warranty covering fixtures and control system components.

Budget:

We budgeted $4,000,000 in CDC bond funding and have an additional $1,066,021.27 budgeted in CIP for the B.B. Owen Park Renovation Project for a total of $5,066,021.27. This contract from NGU Sports Lighting is for $480,000.00. Purchasing the lights directly from NGU allows us to get a discount through TIPS. The remaining budget is sufficient for the construction which will be brought to Council soon.

NGU SPORTS LIGHTING

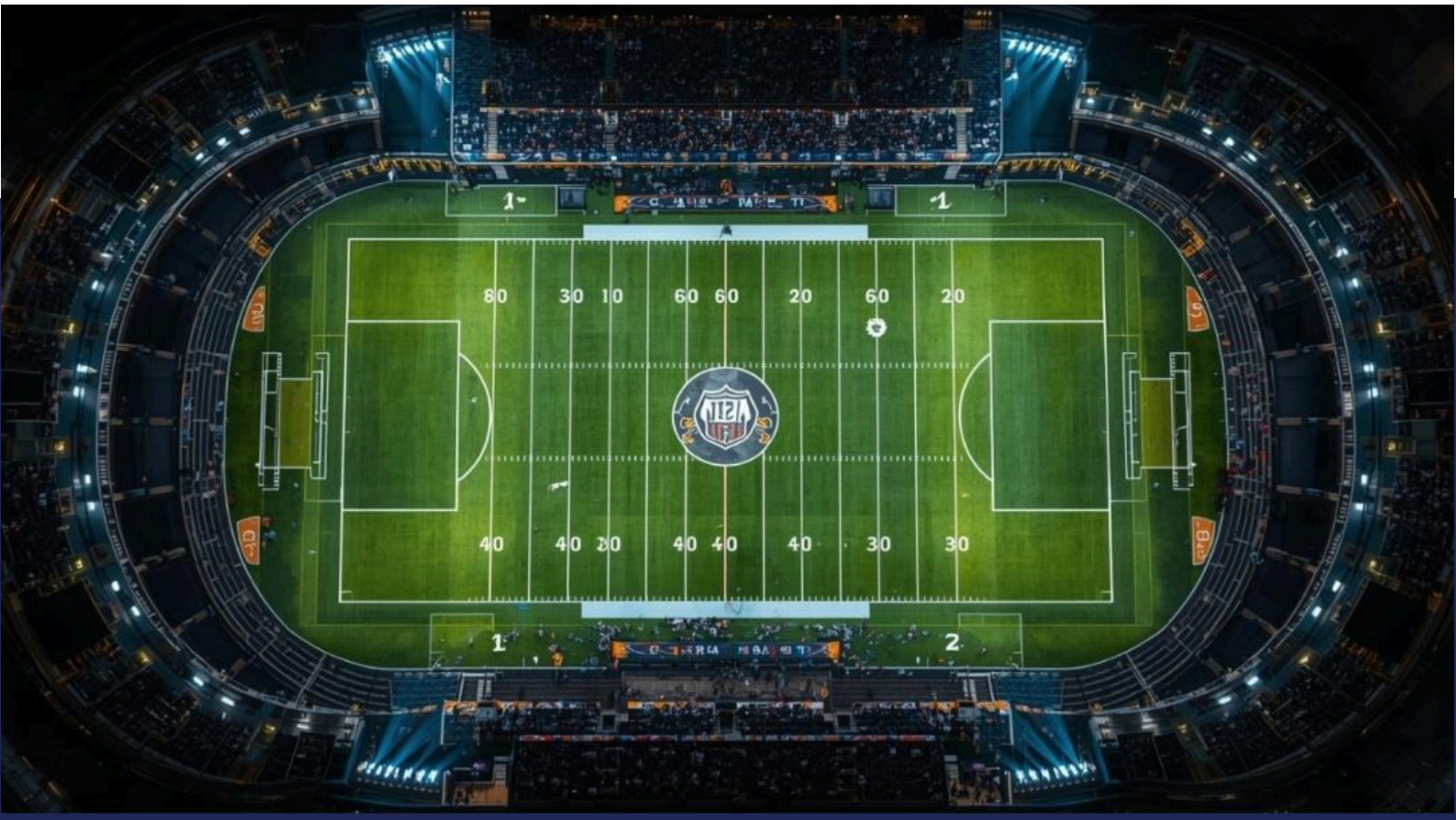

OFFER OF BUSINESS

Project Name:

City of The Colony B.B. Owen Park

TIPS# 23010402

Date Issued: 09-30-2026

Expiration Date: 12-31-2026

Understanding Your Facility

At NGU Sports Lighting, we understand that every facility is unique, and effective lighting begins with a deep understanding of your space. Our team has conducted a comprehensive assessment of your facility, carefully evaluating your existing infrastructure and specific requirements. This ensures we deliver lighting solutions that maximize performance, efficiency, and satisfaction.

Project Goals: This is a retrofit for the existing baseball / softball field and a new construction project for the redesigned multipurpose field. This will consist of existing poles, crossarms and electrical at the baseball softball field and new poles, crossarms, LED fixtures and Airmesh wireless controls with remote access at the multipurpose field.



NGU Proposed Solution

Innovative Ideas for Your Lighting Needs

Solution Overview

Retrofit 6 Existing Poles for Baseball/Softball : New Construction 4 New Poles for Multipurpose

Based on our site assessment, we recommend utilizing all (6) existing poles and cross-arms at baseball/softball. We will remove 6 old poles at multipurpose field and install 4 new poles, crossarms and Ephesus LED fixtures with wireless airmesh control system.

This approach:

- Provides the most cost-effective solution
- Minimizes installation time and site disruption
- Improves field lighting beyond current levels
- Includes Advanced Control Capabilities

Lighting Design Summary:

- Baseball / Softball Field: 50/27FC
- Multipurpose Field: 29FC for multi-sport use
- Superior uniformity eliminates dark spots and provides consistent visibility across all playing surfaces

Control Capabilities

- Pre-Set Scenes and Smart Scheduling
- Individual fixture dimming
- Dramatic effects: Senior night player introductions, national anthem, halftime shows
- Energy management: Automatically dim to practice levels, reducing unnecessary energy use

Defined Scope of Work:

- Retrofit of existing 6 poles crossarms and electrical at the baseball/softball field with new Ephesus LED luminaires.
- Remove existing 6 poles from multipurpose field. Install 4 brand new poles, crossarms and Ephesus LED luminaires at multipurpose field. Tie into new electrical at pole locations. (electrical runs, panels and conduit provided to pole locations by others) Airmesh Hub and commissioning of all Ephesus fixtures into wireless controls network. Lighting design, aiming diagram, project management, and end user training will be provided. 5 years of remote cloud access included. 10 year material and labor warranty included covering fixtures and control system components. This project assumes being able to tie into electrical at the new pole locations with power provided by others.

Proposed Solution Total: $ 480,000.00

Does not include sales tax

NGU Proposed Solution Continued

Innovative Ideas for Your Lighting Needs

Exclusions:

- Electrical service, utility coordination, transformers, panels, breakers, disconnects, underground conduit, conductors, grounding systems, and all power distribution beyond the luminaire connection point at each pole location are by others.

- Proposal assumes permanent power is installed, tested, and available at each pole location prior to NGU's scheduled installation and commissioning activities.

- Proposal includes one (1) total mobilization for foundation and pole installation, fixture installation, aiming, and commissioning. Additional mobilizations resulting from project delays, site readiness issues, unavailable power, incomplete work by others, scheduling changes, restricted site access, or owner/contractor requested return visits may be subject to additional cost.

- NGU is not responsible for delays or additional costs resulting from the actions or inactions of others, including utility providers, electrical contractors, general contractors, or site development contractors.

- Proposal assumes unobstructed access for drilling equipment, cranes, lifts, and material delivery vehicles to all work areas. Any additional costs associated with restricted access, unsuitable site conditions, excessive grading, temporary roads, matting, or special access requirements are excluded.

- Rock excavation, groundwater mitigation, unsuitable soils, over-excavation, dewatering, imported backfill, soil stabilization, caissons, or other unforeseen subsurface conditions are excluded and may require a change order.

- Restoration of landscaping, irrigation, paving, striping, fencing, sidewalks, sports surfaces, or other site improvements beyond disturbance directly caused by NGU's installation activities is excluded.

- Permit fees, inspection fees, testing fees, special inspections, geotechnical services, surveying, and third-party engineering services are excluded unless specifically identified herein.

Foundation Assumptions:

• Proposal pricing is based on assumed soil conditions typical for the Missouri City, Texas area and preliminary foundation depths as follows:

- 60' direct-embed poles serving the Multipurpose field are based on a 10-foot embedment depth.

• Final foundation design is contingent upon review of a geotechnical report provided by others and subsequent structural engineering review.

• Should the geotechnical report, structural analysis, or permitting authority require foundation depths, diameters, reinforcement, concrete quantities, or installation methods beyond those assumed herein, NGU reserves the right to issue a change order for the additional labor, materials, equipment, engineering, and associated costs required to accommodate the revised foundation design.

Exclusions & Assumptions

- **Electrical Distribution:** Electrical service, utility coordination, transformers, panels, breakers, disconnects, underground conduit, conductors, grounding systems, trenching, and all power distribution beyond the luminaire connection point at each pole location are by others. NGU's scope is limited to furnishing and connecting the proposed lighting equipment to electrical power provided by others at each pole location.
- **Permanent Power:** Proposal assumes permanent electrical power is installed, tested, energized, and available at each pole location prior to NGU's scheduled installation, aiming, and commissioning activities. Delays or additional mobilization resulting from unavailable, incomplete, or improperly functioning electrical service may result in additional charges.
- **Existing Infrastructure:** Reuse of existing poles, crossarms, foundations, and electrical infrastructure is based on visual/site assessment and is subject to field verification. Repairs, reinforcement, modification, replacement, or structural remediation of existing poles, crossarms, foundations, or electrical infrastructure required to accommodate the proposed lighting equipment are excluded unless specifically identified herein.
- **Existing Pole Removal:** Removal of the six (6) existing multipurpose field poles is included as described in the scope. Unforeseen conditions encountered during removal, including abandoned foundations, buried concrete, rock, underground utilities, debris, or other obstructions that prevent or materially complicate removal are excluded and may require additional cost.
- **One Mobilization:** Proposal includes one (1) total mobilization for the work described herein, including pole/foundation installation, fixture installation, aiming, and commissioning. Additional mobilizations resulting from project delays, site readiness issues, unavailable power, incomplete work by others, scheduling changes, restricted site access, weather-related delays, or owner/contractor-requested return visits may be subject to additional cost.
- **Site Access:** Proposal assumes unobstructed access for cranes, drilling equipment, lifts, trucks, material delivery vehicles, and other heavy equipment necessary to perform the work. Any additional costs associated with restricted access, unsuitable site conditions, excessive grading, temporary roads, matting, specialty equipment, or special access requirements are excluded.
- **Landscape, Ground & Site Protection: The contract price carries no risk or allowance for repair, restoration, replacement, or remediation of landscaping, turf, irrigation, drainage, paving, sidewalks, curbs, fencing, striping, athletic surfaces, or other site improvements resulting from the use of cranes, drills, lifts, trucks, or other heavy equipment required to retrofit existing poles and install new poles.** Due to the nature and weight of the equipment required to perform the work, rutting, compaction, tire impressions, turf disturbance, soil disturbance, and other incidental site impacts may occur. Protection,

restoration, replacement, or repair of such conditions is excluded from NGU's scope unless specifically identified and priced herein.

- **Ground Protection / Temporary Access:** Temporary roadways, access improvements, construction mats, crane mats, turf protection systems, temporary bridges, temporary grading, or other ground-protection measures are excluded unless specifically identified in this proposal. If required by the owner, general contractor, site conditions, or AHJ, such measures shall be provided by others or may be furnished by NGU at additional cost.
- **Subsurface Conditions:** Rock excavation, groundwater mitigation, unsuitable soils, over-excavation, dewatering, imported backfill, soil stabilization, caissons, abandoned foundations, buried debris, undocumented utilities, or other unforeseen subsurface conditions are excluded and may require a change order.
- **Foundation Engineering:** Pricing is based on the foundation assumptions specifically identified herein and is not based on a site-specific geotechnical investigation. Geotechnical services, surveying, structural engineering, stamped foundation design, special inspections, and other third-party engineering services are excluded unless specifically identified herein. Any foundation requirements exceeding the assumptions included in this proposal may require a change order.
- **Permits & Inspections:** Permit fees, plan review fees, inspection fees, testing fees, special inspections, AHJ fees, surveying, and other third-party permitting or inspection requirements are excluded unless specifically identified herein.
- **Restoration:** Restoration or replacement of landscaping, irrigation, paving, striping, fencing, sidewalks, curbs, athletic surfaces, drainage systems, or other existing site improvements is excluded from NGU's scope except for work specifically identified herein.
- **Weather:** NGU is not responsible for additional costs or schedule impacts resulting from adverse weather, saturated site conditions, or conditions that prevent safe operation of cranes, drilling equipment, lifts, or other required equipment.
- **Owner/Contractor Work:** NGU is not responsible for delays, additional costs, or impacts resulting from the actions or inactions of the owner, general contractor, electrical contractor, civil contractor, utility provider, site contractor, or other third parties.
- **Control System Connectivity:** Five (5) years of remote cloud access is included as specified. Customer-provided internet/network infrastructure and ongoing internet service required for remote connectivity are excluded unless specifically identified herein. Remote access and cloud functionality are subject to the availability and performance of the applicable communications network.
- **Existing Site Conditions:** Proposal pricing is based on visible and reasonably identifiable site conditions observed during the assessment. Conditions that are concealed, inaccessible, undocumented, or materially different from those represented or observed may require additional cost.

- **Owner-Furnished Information:** Pricing and lighting design are based on information provided by the owner and/or project representatives, including field dimensions, pole locations, mounting heights, electrical information, and site conditions. Changes to these conditions after proposal acceptance may require revisions to the design and associated pricing.
- **Pole Survey & Layout:** Surveying, staking, layout, or establishment of the final locations and coordinates for the four (4) new multipurpose field poles is excluded from NGU's scope. The owner and/or general contractor shall be responsible for providing surveyed pole locations, coordinates, benchmarks, property/site control points, and required staking prior to NGU's scheduled installation. NGU will install the new poles based on the locations provided by the owner and/or general contractor. Any relocation, re-staking, or additional mobilization resulting from inaccurate, incomplete, or changed pole locations provided by others may result in additional cost.

Customer Testimonials

"NGU has consistently delivered 1st-class service and installation. They are our go-to LED sports lighting partner."

- Matt Adams,
Asst. Superintendent
of Finance & Operations

"NGU stood out from the start! We can confidentially tell you we made the correct decision. They were amazing to work with, very accommodating, and their product has been OUTSTANDING!"

-Michael Mastroianni,
Director of Athletics

"NGU converted all our sports lighting systems campus-wide, enhancing the fan experience and exceeding NCAA lighting standards. Their service remains exceptional."

-Nick Morrow,
Director of Athletics

"NGU Sports Lighting has consistently delivered projects with excellent results with their best-in-class LED sports lighting system. Their great service and responsiveness, along with great value and high-quality products, make the City of Greenville a repeat client"

-Brad Cuttino,
Recreation Administrator

General Project Timeline

Key Milestones for Successful Implementation

Agreement Sign-Off

Implementation Team Introduction

Material Delivery

Installation

Programming

System Training

Closing Inspection

Timeline Overview

Our project timeline is carefully structured to ensure that every phase is executed smoothly and efficiently, from the initial consultation through to the final inspection and handover. Throughout the entire process, we prioritize clear communication and transparency. Regular updates and check-ins keep you informed and engaged, so you always know what to expect next. By combining detailed planning, consistent oversight, and a commitment to excellence, we ensure that your experience is seamless, collaborative, and ultimately satisfying from start to finish.

A more detailed and personalized timeline will be provided once the project begins.



Supporting Project Documentation

Terms & Conditions

Lighting Design

Product Specification Sheets

Warranty

Questions?

Feel free to reach out to us!

NGU SPORTS LIGHTING
2401 PGA BLVD, SUITE 110
PALM BEACH GARDENS, FL 33410
PH: 561-249-2954
ngusportslighting.com

Lighting Specialist
Zach Howard
214-364-4401

Customer Happiness
Naz Flannigan
PH: (610) 483-0771

NGU SPORTS LIGHTING, LLC.

Terms and Conditions

1. Invoicing Schedule

- **50%** of the Purchase Order (PO) amount is invoiced upon receipt of the PO.
- **35%** of the PO amount is invoiced upon shipment of lighting fixtures.
- **15%** of the PO amount is invoiced upon completion of installation.

---

2. Payment Terms

- **Net 10:** All invoices are due within 10 days of the invoice date.
- System programming and training may be scheduled separately due to multi-party coordination and do not affect invoicing.

---

3. General Terms

- All payments must be made in accordance with the invoicing schedule outlined above.
- Late payments may be subject to additional fees or interest as permitted by applicable law.
- NGU Sports Lighting reserves the right to suspend or delay project work in the event of non-payment.
- Any changes to the scope of work or project timeline must be agreed upon in writing by both parties.
- Ownership of all materials and equipment remains with NGU Sports Lighting until full payment is received.

---

4. Liability and Warranty

- NGU Sports Lighting provides warranties as specified in the project documentation.
- NGU Sports Lighting is not liable for delays caused by factors beyond its control, including but not limited to weather, supply chain disruptions, or third-party coordination issues.

---

5. Acceptance

By issuing a Purchase Order to NGU Sports Lighting, the client acknowledges and agrees to these Terms and Conditions.

NGU Sports Lighting, Accounting Information

Contact: ap@ngusportslighting.com

Website: www.ngusportslighting.com

Luminaire Schedule
Scenario: FIELD 2

Symbol	Qty	Label	Description	LLF	Luminaire Lumens	Luminaire Watts	Total Watts
	3	680N-5S-CV5	EPH-08-680N-57-70-5S-CV5	0.920	56304	697.2	2091.6
	31	680N-3S-CV5	EPH-08-680N-57-70-3S-CV5	0.920	68820	697.2	21613.2
	14	680N-4S-CV5	EPH-08-680N-57-70-4S-CV5	0.920	63336	697.2	9760.8
	12	680N-5S	EPH-08-680N-57-70-5S-HEG	0.920	110013	697.2	8366.4
	12	680N-4S	EPH-08-680N-57-70-4S-HEG	0.920	109784	697.2	8366.4
	6	680N-3S	EPH-08-680N-57-70-3S-HEG	0.920	108649	697.2	4183.2

Calculation Summary
Scenario: FIELD 2

Label	CalcType	Units	Avg	Max	Min	Avg/Min	Max/Min	CV
FIELD 2	Illuminance	Fc	29.0	45	18	1.6	2.5	0.2
SURROUNDING	Illuminance	Fc	0.6	8.4	0.0	N.A.	N.A.	N.A.
1 INFIELD	Illuminance	Fc	50.4	62.00	36.00	1.4	1.7	0.2
1 OUTFIELD	Illuminance	Fc	27.8	43.00	17.00	1.6	2.5	0.2

Scenario/Channel Summary
Scenario: FIELD 2

Channel	Switched	# Lums
FIELD 1	On	30
FIELD 2	On	48

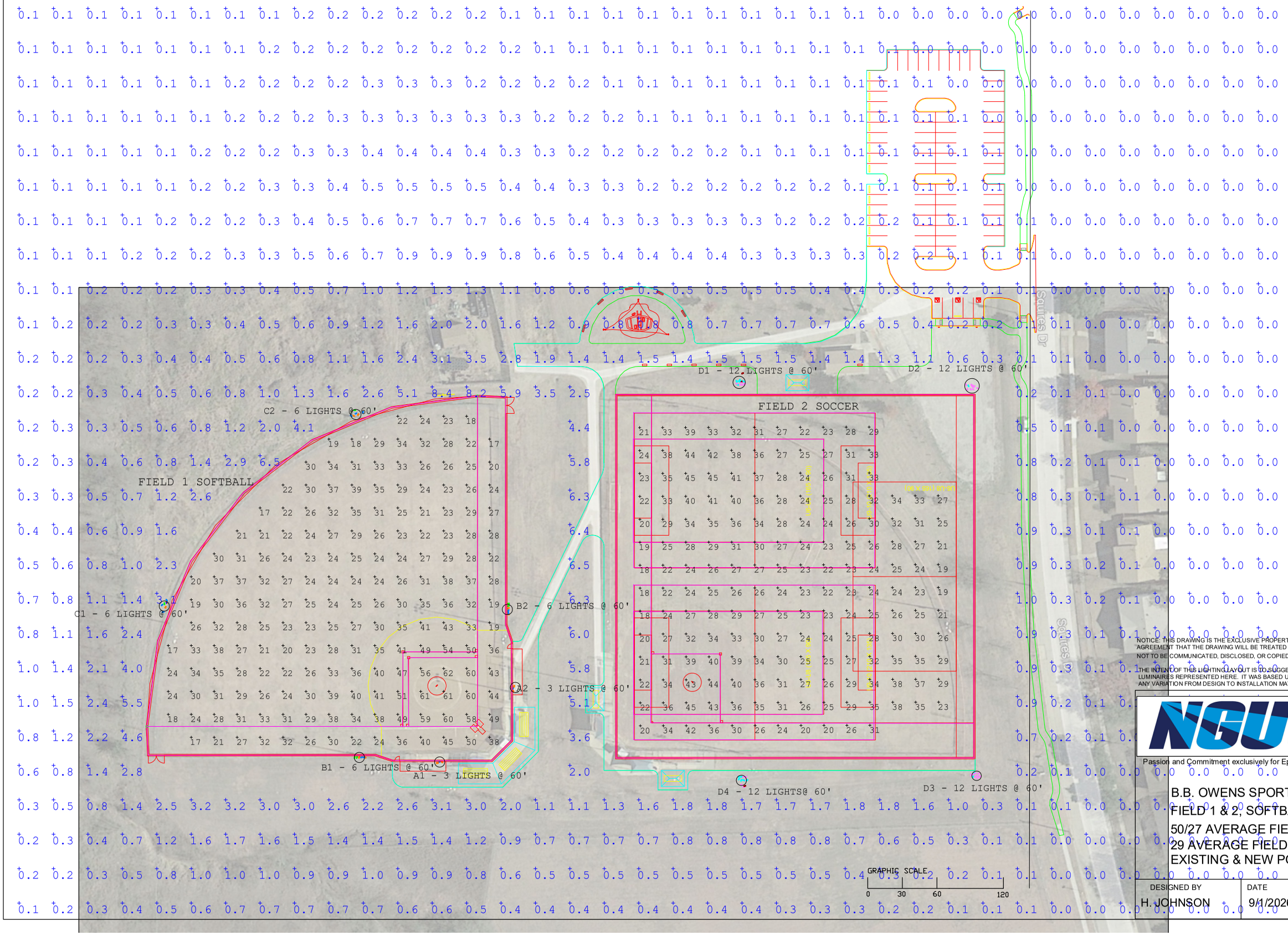

NOTICE: THIS DRAWING IS THE EXCLUSIVE PROPERTY OF NGU SPORTS LIGHTING LLC. ITS ACCEPTANCE CONSTITUTES AGREEMENT THAT THE DRAWING WILL BE TREATED AS CONFIDENTIAL. IT IS TO BE RETURNED UPON REQUEST AND IS NOT TO BE COMMUNICATED, DISCLOSED, OR COPIED EXCEPT AS EXPRESSLY AUTHORIZED BY NGU.

THE INTENT OF THIS LIGHTING LAYOUT IS TO SUGGEST THE BEST UTILIZATION AND THE PERFORMANCE OF EPHESUS LUMINAIRES REPRESENTED HERE. IT WAS BASED UPON INFORMATION PROVIDED TO NGU SPORTS LIGHTING, LLC AND ANY VARIATION FROM DESIGN TO INSTALLATION MAY AFFECT THE EXPECTED RESULTS.

NGU SPORTS LIGHTING
Passion and Commitment exclusively for Ephesus LED Sports Lighting

2401 PGA Blvd, Suite 110
Palm Beach Gardens, FL 33410
www.NGUsportslighting.com
Phone: 1-855-NGU-LEDS

B.B. OWENS SPORTS COMPLEX
FIELD 1 & 2, SOFTBALL & SOCCER
50/27 AVERAGE FIELD 1
29 AVERAGE FIELD 2
EXISTING & NEW POLES AT 60'

DESIGNED BY	DATE	SCALE	DRAWING NUMBER
H. JOHNSON	9/1/2026	1" = 60'	LD261102D2

Project		Catalog #		Type	
Prepared by		Notes		Date	



Ephesus

LUMA**SPORT 8** - Integral

White LED Sports & Entertainment Luminaire

Typical Applications

Ball Fields • Pro Arenas • University & Collegiate Arenas
University & Collegiate Stadiums • Multi-Event & Convention Centers
Gymnasiums & Field Houses

Product Certification

Interactive Menu

- Ordering Information page 2
- Dimensional and Mounting Details page 3
- Performance Data page 7
- Electrical Performance Data page 7
- Ordering Information for Accessories page 8
- Accessory Dimensions and Part Details page 9
- Example System Topology page 12

Top Product Features

- Streamlined design ideal for one-to-one integral ballast retrofit systems speeding up and simplifying installation.
- Pre-aiming capability reduces installation time and ensures aiming precision.
- Industry leading light source reliability with Chip-on-Board LEDs with an efficacy up to 174 lumens per Watt.
- Award winning glare and cutoff control via patented Hybrid Reflector and TIR Optical System.
- 4000K & 5700K CCT options to meet diverse venue requirements.
- Top Yoke, Bottom Yoke, and Pendant mounting options for flexibility in applications.
- Power redundancy insures system reliability.
- Wired DMX and Wireless AirMesh control protocols allow for system alerts, scheduling, and on-demand control of static and dynamic lighting scenes.
- Options to meet Trade Agreements Act requirements.

Mounting Configuration Examples



2QTY LUMASPORT 8 - INTEGRAL LUMINAIRE
SHOWN USING THE TOP MOUNT YOKE (TY)



2QTY LUMASPORT 8 - INTEGRAL LUMINAIRE
SHOWN USING THE BOTTOM MOUNT YOKE (BY)
ON A EPHESUS CATWALK BRACKET (EPH-LS-CAT-N-2-U-B)



1QTY LUMASPORT 8 - INTEGRAL LUMINAIRE
SHOWN USING THE PENDANT MOUNT (RP)

Project		**Catalog #**		**Type**	
Prepared by		**Notes**		**Date**	



Ephesus

AirMesh Hub

Wireless Lighting System Controls

Typical Indoor/Outdoor Applications

• Professional Stadiums & Arenas University/Collegiate Stadiums & Arenas • K-12 Stadiums & Arenas • Game Fields • Practice Fields • Multi-use Recreational & Municipal Fields • Public Assembly & Convention Centers • Gymnasiums & Field Houses • Unmanned Sports Facilities

Interactive Menu

- AirMesh Hub page 1
- Top Features page 2
- Example System Topology page 3
- Controls Package Ordering Information page 4

Product Certification

Product Overview

Designed for optimal control and efficiency, the AirMesh Hub is a cornerstone of advanced lighting solutions for athletic and event facilities. This robust device enables facility directors and athletic directors to effortlessly manage lighting with its intuitive wireless, push-button interface, suitable for environments ranging from municipal ballparks to collegiate arenas and professional sports complexes.

Encased in a durable NEMA 4X enclosure, the AirMesh Hub ensures reliable operation in both indoor and outdoor settings, standing up to the challenges of diverse weather conditions. The system supports up to 25 programmable scenes accessible via straightforward five-button control or dynamic and sequential ProFX scenes via the dashboard allowing for precise management of lighting across different zones or throughout the entire venue.

The AirMesh Hub's user-centric design facilitates quick adjustments and on-the-fly control, which are essential during varied sports events and activities. Installation is streamlined and non-intrusive, ensuring that your facility can upgrade without significant downtime, enhancing both athlete performance and spectator experience with superior lighting conditions.

Empower your facility with the AirMesh Hub, where advanced technology meets user simplicity, making it an indispensable tool for modern sports and event managements.

Dimensional Details

HEAD ON

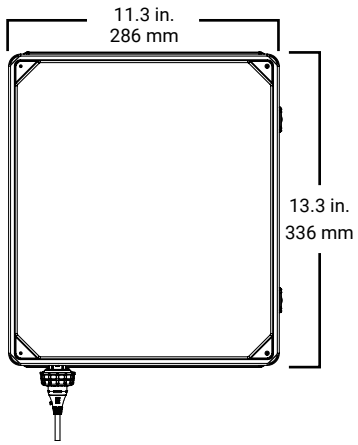

LEFT PROFILE

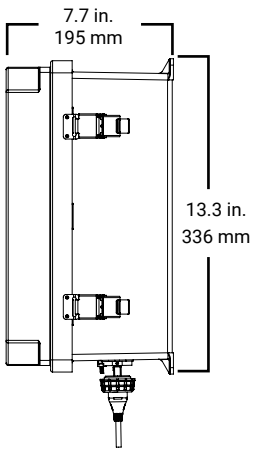

BOTTOM

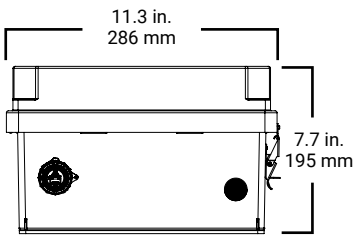

Due to our continuous improvement efforts, specifications are subject to change without notice.
*Cellular and/or data charges may apply

Project Number: _____

Effective Date: _____

Expiration Date: _____

Ephesus Lighting System Parts and Labor Warranty

I. What the Warranty Covers

NGU Sports Lighting, LLC. ("NGU") warrants to the purchaser ("You" or "User") of the new Ephesus fixtures from Cooper Lighting for the original installation location ("Covered Products") that the Covered Products shall, **for a period of ten (10) years from the date of original shipment (the "Fixture Warranty Period"), be free from defects in material and workmanship.** During the Fixture Warranty Period, NGU will repair or replace Covered Products to restore the performance of the Covered Products to original design criteria as necessitated by failure of the Covered Products during normal usage. **For a period of ten (10 years) after the 31st day following installation ("Labor Warranty Period"),** NGU will also provide labor to restore the operation of the Covered Products to original design criteria ("Covered Service").

NGU Warranty obligations are triggered only after You experience light level reductions of 10% from the Covered Products.

If there is any conflict between the terms of this Warranty and information communicated either orally or in writing by NGU employees or agents this Warranty controls.

II. Warranty Activation / Service Claims

You must make a valid claim to NGU to receive coverage under the Warranty. Warranty claims can be serviced by contacting NGU customer service and sales center:

Phone: (855) 648 - 5337
Email: ngusupport@ngusportslighting.com

If you are unsure whether a situation exists that is covered by the Warranty, please contact NGU's customer service and sales center at the phone number or email address listed above for assistance.

If NGU determines that a Labor Warranty Claim exists we will process the claim and perform the Covered Service using its own personnel or contractor.

III. What Is Not Covered Under the Warranty

This Warranty does not cover:

a) cosmetic defects;
b) damage, defects, or failure caused by:
   i. acts of God (including but not limited to floods, tornadoes, lightning or earthquakes);
   ii. any and all electrical issues that are not directly related to a fixture failure;
   iii. accident, theft, vandalism, abuse, animal or insect infestation, or negligence;
   iv. unrelated activity or other non-regular use of the installation location;
   v. misuse, misapplication, or modification of any part of the Covered Product;
   vi. improper storage, installation, repair, operation, inspection or maintenance;
   vii. the use of unauthorized components, parts, accessories, or other materials or by equipment or products manufactured by someone other than Cooper Lighting;
   viii. wrong or inadequate electrical current, connection or supply;
   ix. conditions that do not meet IEEE Emerald Book standards for ground of sensitive electronics; or transit.
c) other equipment or products manufactured by someone other than NGU (CooperLightng).
d) if access points require additional services or equipment beyond normal installation conditions—including, but not limited to, ground protection, crane access, boom lifts exceeding 135', fence removal, shrub or landscape removal, or any other extensive service or material—these costs will not be covered and will remain the responsibility of the facility/contractor.

IV. What Voids the Warranty

This Warranty is void, and NGU shall have no liability hereunder, with respect to a Covered Product if You or any person other than an employee, independent contractor, or subcontractor of NGU: (a) install or use a Covered Product in a manner that is not in accordance with the applicable specifications and instructions, including, but not limited to, over/ under voltage or current conditions, excessive switching cycles, operating hours, or outside any applicable operating conditions; (b) without the prior written consent of NGU, modify, tamper, or disassemble a Covered Product, including, without limitation, alter serial numbers or removes factory supplied stickers or labels of a Product; or (c) use unauthorized components, parts, accessories, or other materials to repair a Covered Product.

V. Replacement of or Repair to Product

NGU, in its discretion, may use new, reconditioned, refurbished, repaired or re-manufactured products or parts to repair or replace a Covered Product that meets the conditions of this Warranty. Repaired or replaced Covered Products are warranted for the remainder of the original Warranty Period.

VI. Limitation of Warranty

THIS IS YOUR SOLE EXPRESS WARRANTY WITH RESPECT TO THE COVERED PRODUCTS. NGU DISCLAIMS ALL OTHER WARRANTIES, EXPRESS OR IMPLIED, INCLUDING ANY IMPLIED WARRANTIES OF MERCHANTABILITY AND FITNESS FOR A PARTICULAR PURPOSE.

VII. Limitation of Liability

THE AGGREGATE LIABILITY OF NGU ARISING FROM OR RELATED TO THIS WARRANTY, WHETHER IN CONTRACT, TORT, OR OTHERWISE, SHALL BE LIMITED TO THE REPAIR OR REPLACEMENT OF COVERED PRODUCTS AT NGU'S OPTION. THE REMEDIES OF THE USER SET FORTH IN THIS WARRANTY ARE EXCLUSIVE AND ARE USER'S SOLE REMEDIES FOR ANY FAILURE OF NGU TO COMPLY WITH ITS OBLIGATIONS HEREUNDER. NOTWITHSTANDING ANY PROVISION TO THE CONTRARY, IN NO EVENT SHALL NGU BE LIABLE IN CONTRACT (INCLUDING WARRANTY), IN TORT (INCLUDING NEGLIGENCE OR STRICT LIABILITY) OR OTHERWISE FOR DAMAGE TO PROPERTY OR EQUIPMENT OTHER THAN PRODUCTS TO WHICH THIS WARRANTY RELATES, LOSS OF PROFITS OR REVENUE, LOSS OF USE OF PRODUCTS, COST OF CAPITAL, CLAIMS OF CUSTOMERS OF THE USER OR ANY SPECIAL, INDIRECT, INCIDENTAL OR CONSEQUENTIAL DAMAGES WHATSOEVER, REGARDLESS OF WHETHER SUCH POTENTIAL DAMAGES ARE FORESEEABLE OR IF USER HAS BEEN ADVISED OF SUCH DAMAGES.

© 2018 NGU, All Rights Reserved

VIII. Severability

If any term or provision of this Warranty is held invalid or unenforceable, the remainder of this Warranty shall not be effected, and every other term and provision of this contract shall be deemed valid and enforceable to the extent permitted by law.

IX. Modifications

This Warranty is effective for the purchases of Covered Products on or after the effective date set forth herein. NGU reserves the right to modify this Warranty at any time, and any modifications will be effective for all orders placed on or after the effective date of such revised Warranty.

X. Transfer

This Warranty cannot be transferred without the prior written consent of NGU.

XI. Choice of Law

The Warranty shall be construed and enforced in accordance with the laws of the state of Florida.

© 2018 NGU, All Rights Reserved

CITY OF THE COLONY, TEXAS

RESOLUTION NO. 2026 - _____

A RESOLUTION OF THE CITY COUNCIL OF THE CITY OF THE COLONY, TEXAS, AUTHORIZING THE CITY MANAGER TO EXECUTE A CONTRACT TO NGU SPORTS LIGHTING, LLC FOR THE PURCHASE AND INSTALLATION OF LED LIGHTING FIXTURES AND POLES FOR THE B.B. OWEN PARK PROJECT; AND PROVIDING AN EFFECTIVE DATE

WHEREAS, the City Council of the City of The Colony, Texas hereby authorizes the City Manager to execute a contract with NGU Sports Lighting, LLC for the purchase and installation of LED lighting fixtures and poles for the B.B. Owen Park Project; and

WHEREAS, with this contract, the City of The Colony is agreeing to the services not to exceed the amount of $480,000.00.

NOW, THEREFORE, BE IT RESOLVED BY THE CITY COUNCIL OF THE CITY OF THE COLONY, TEXAS, THAT:

Section 1. The Contract, having been reviewed by the City Council of the City of The Colony, Texas, and found to be acceptable and in the best interest of the City and its citizens, be, and the same is hereby, in all things approved.

Section 2. The City Manager is hereby authorized to execute the contract on behalf of the City of The Colony, Texas, with the terms and conditions stated therein.

Section 3. This Resolution shall take effect immediately from and after its adoption and it is so resolved.

PASSED AND APPROVED BY THE CITY COUNCIL OF THE CITY OF THE COLONY, TEXAS THIS 17TH DAY OF NOVEMBER 2026.

_____
Richard Boyer, Mayor
City of The Colony, Texas

ATTEST:

_____
Tina Stewart, City Secretary, TRMC, CMC

APPROVED AS TO FORM:

_____
Jeffrey L. Moore, City Attorney

CITY COUNCIL Agenda Item Report

Meeting Date: November 17, 2026
Submitted By: Ana Alvarado
Submitting Department: Parks & Recreation
Item Type: Resolution
Agenda Section: regular agenda items

Suggested Action:
Discuss and consider approving a resolution authorizing the City Manager to execute a contract with Steele & Freeman, Inc., for the construction of the new Recreation Center in the amount of $27,476,822.00 guaranteed maximum price (GMP) to be funded by the Community Development Corporation. (Lehmann)

Background:
CDC issued Bond funds to be used for the construction of the new Recreation Center.

Attachments:
CITY_MEMO_STEELE_FREEMAN_RECREATION_CENTER_CONSTRUCTION.pdf
Colony Rec Center - A201 A133 A133ExhibitA (SFI Signed).pdf
Res. 2026-xxx - Steele & Freeman, Inc - REC Center.doc

AGENDA ITEM

TO:	Mayor and City Council, City Manager & CDC
DATE SUBMITTED:	11/10/2026
MEETING DATE:	11/17/2026
SUMMARY OF REQUEST:	Discuss and consider approving a resolution authorizing the City Manager to execute a contract with Steele & Freeman, Inc., for the construction of the new Recreation Center in the amount of $27,476,822.00 to be funded by the Community Development Corporation.

Background:

In 2025, we approved the design contract with Huitt-Zollars. The scope included selecting a Construction Manager at Risk (CMAR) to assist throughout the design process. Steele & Freeman was selected as the CMAR among 12 other firms. They have submitted the attached Guaranteed Maximum Price (GMP) for construction of the new Recreation Center located at the former Stewart Creek Elementary.

The new Recreation Center will replace our existing facility that no longer meets the needs of the community while expanding recreation programming for residents. The facility renovates approximately 30,647 square feet of the existing building to provide fitness, multipurpose and rental spaces, an esports and game room, a lobby, offices, and storage. We are also constructing an approximately 22,361 SF gymnasium addition with (2) full-sized courts, an elevated running track, and equipment storage. This project was identified as a priority project for CDC funding and included in the bond funding.

Scope of Work:

- Site work and preparation: Demolition, grading, utilities, drainage, paving, and parking improvements.
- New construction: Construct a new gymnasium addition of 22,261 square-foot, including foundation, structural, roofing, and exterior envelope.
- Interior spaces and amenities: Gymnasium, fitness areas, multipurpose/classrooms, locker rooms and restrooms, lobby and administrative offices.

- Mechanical, electrical, and plumbing: HVAC, electrical, lighting, plumbing, fire protection, and security systems.

- Site amenities and finishes: Landscaping, irrigation, signage, exterior lighting, and accessible routes.

Schedule:

Steele & Freeman indicated approximately 15 months for construction but with opportunity to finish by September of 2027 if there are no major delays.

Budget:

We had set aside funds in the CDC bond for the Recreation Center Project with an additional set aside in CDC CIP over the last few years. With the guaranteed maximum price, we have identified roughly 1.8 million in value engineering opportunities that will allow us to reduce the cost and if so, the money will be returned to us at the end of the project.

AIA® Document A201® – 2017

General Conditions of the Contract for Construction

for the following PROJECT:
(Name and location or address)

The Colony Recreation Center
4431 Augusta Street
The Colony, Texas 75056

THE OWNER:
(Name, legal status and address)

The City of The Colony, Texas
6053 Main Street
The Colony, Texas 75056

THE ARCHITECT:
(Name, legal status and address)

Huitt-Zollars Architects
5460 LBJ Freeway Suite 1500
Dallas, Texas 75240

TABLE OF ARTICLES

1 GENERAL PROVISIONS

2 OWNER

3 CONTRACTOR

4 ARCHITECT

5 SUBCONTRACTORS

6 CONSTRUCTION BY OWNER OR BY SEPARATE CONTRACTORS

7 CHANGES IN THE WORK

8 TIME

9 PAYMENTS AND COMPLETION

10 PROTECTION OF PERSONS AND PROPERTY

11 INSURANCE AND BONDS

12 UNCOVERING AND CORRECTION OF WORK

ADDITIONS AND DELETIONS:
The author of this document may have revised the text of the original AIA standard form. An *Additions and Deletions Report* that notes revisions to the standard form text is available from the author and should be reviewed. A vertical line in the left margin of this document indicates where the author has added to or deleted from the original AIA text.

This document has important legal consequences. Consultation with an attorney is encouraged with respect to its completion or modification.

For guidance in modifying this document to include supplementary conditions, see AIA Document A503™–2017, Guide for Supplementary Conditions.

AIA Document A201 – 2017. Copyright © 1911, 1915, 1918, 1925, 1937, 1951, 1958, 1961, 1963, 1966, 1970, 1976, 1987, 1997, 2007 and 2017. All rights reserved. "The American Institute of Architects," "American Institute of Architects," "AIA," the AIA Logo, and "AIA Contract Documents" are trademarks of The American Institute of Architects. This document was produced at 18:01:06 CST on 11/09/2026 under Subscription No.20240070886 which expires on 10/15/2027, is not for resale, is licensed for one-time use only, and may only be used in accordance with the AIA Contract Documents® Terms of Service. To report copyright violations, e-mail docinfo@aiacontracts.com.
User Notes: (6af25eb25a16cb79a1e84ce5)

13 MISCELLANEOUS PROVISIONS

14 TERMINATION OR SUSPENSION OF THE CONTRACT

15 CLAIMS AND DISPUTES

AIA Document A201 – 2017. Copyright © 1911, 1915, 1918, 1925, 1937, 1951, 1958, 1961, 1963, 1966, 1970, 1976, 1987, 1997, 2007 and 2017. All rights reserved. "The American Institute of Architects," "American Institute of Architects," "AIA," the AIA Logo, and "AIA Contract Documents" are trademarks of The American Institute of Architects. This document was produced at 18:01:06 CST on 11/09/2026 under Subscription No.20240070886 which expires on 10/15/2027, is not for resale, is licensed for one-time use only, and may only be used in accordance with the AIA Contract Documents® Terms of Service. To report copyright violations, e-mail docinfo@aiacontracts.com.
User Notes: (6af25eb25a16cb79a1e84ce5)

INDEX
(Topics and numbers in bold are Section headings.)

Acceptance of Nonconforming Work
9.6.6, 9.9.3, **12.3**
Acceptance of Work
9.6.6, 9.8.2, 9.9.3, 9.10.1, 9.10.3, 12.3
Access to Work
3.16, 6.2.1, 12.1
Accident Prevention
10
Acts and Omissions
3.2, 3.3.2, 3.12.8, 3.18, 4.2.3, 8.3.1, 9.5.1, 10.2.5, 10.2.8, 13.3.2, 14.1, 15.1.2, 15.2
Addenda
1.1.1
Additional Costs, Claims for
3.7.4, 3.7.5, 10.3.2, 15.1.5
Additional Inspections and Testing
9.4.2, 9.8.3, 12.2.1, **13.4**
Additional Time, Claims for
3.2.4, 3.7.4, 3.7.5, 3.10.2, 8.3.2, **15.1.6**
Administration of the Contract
3.1.3, **4.2**, 9.4, 9.5
Advertisement or Invitation to Bid
1.1.1
Aesthetic Effect
4.2.13
Allowances
3.8
Applications for Payment
4.2.5, 7.3.9, 9.2, **9.3**, 9.4, 9.5.1, 9.5.4, 9.6.3, 9.7, 9.10
Approvals
2.1.1, 2.3.1, 2.5, 3.1.3, 3.10.2, 3.12.8, 3.12.9, 3.12.10.1, 4.2.7, 9.3.2, 13.4.1
Arbitration
8.3.1, 15.3.2, **15.4**
ARCHITECT
4
Architect, Definition of
4.1.1
Architect, Extent of Authority
2.5, 3.12.7, 4.1.2, 4.2, 5.2, 6.3, 7.1.2, 7.3.4, 7.4, 9.2, 9.3.1, 9.4, 9.5, 9.6.3, 9.8, 9.10.1, 9.10.3, 12.1, 12.2.1, 13.4.1, 13.4.2, 14.2.2, 14.2.4, 15.1.4, 15.2.1
Architect, Limitations of Authority and Responsibility
2.1.1, 3.12.4, 3.12.8, 3.12.10, 4.1.2, 4.2.1, 4.2.2, 4.2.3, 4.2.6, 4.2.7, 4.2.10, 4.2.12, 4.2.13, 5.2.1, 7.4, 9.4.2, 9.5.4, 9.6.4, 15.1.4, 15.2
Architect's Additional Services and Expenses
2.5, 12.2.1, 13.4.2, 13.4.3, 14.2.4
Architect's Administration of the Contract
3.1.3, 3.7.4, 15.2, 9.4.1, 9.5
Architect's Approvals
2.5, 3.1.3, 3.5, 3.10.2, 4.2.7
Architect's Authority to Reject Work
3.5, 4.2.6, 12.1.2, 12.2.1

AIA Document A201 – 2017. Copyright © 1911, 1915, 1918, 1925, 1937, 1951, 1958, 1961, 1963, 1966, 1970, 1976, 1987, 1997, 2007 and 2017. All rights reserved. "The American Institute of Architects," "American Institute of Architects," "AIA," the AIA Logo, and "AIA Contract Documents" are trademarks of The American Institute of Architects. This document was produced at 18:01:06 CST on 11/09/2026 under Subscription No.20240070886 which expires on 10/15/2027, is not for resale, is licensed for one-time use only, and may only be used in accordance with the AIA Contract Documents® Terms of Service. To report copyright violations, e-mail docinfo@aiacontracts.com.
User Notes: (6af25eb25a16cb79a1e84ce5)

Architect's Copyright
1.1.7, 1.5
Architect's Decisions
3.7.4, 4.2.6, 4.2.7, 4.2.11, 4.2.12, 4.2.13, 4.2.14, 6.3, 7.3.4, 7.3.9, 8.1.3, 8.3.1, 9.2, 9.4.1, 9.5, 9.8.4, 9.9.1, 13.4.2, 15.2
Architect's Inspections
3.7.4, 4.2.2, 4.2.9, 9.4.2, 9.8.3, 9.9.2, 9.10.1, 13.4
Architect's Instructions
3.2.4, 3.3.1, 4.2.6, 4.2.7, 13.4.2
Architect's Interpretations
4.2.11, 4.2.12
Architect's Project Representative
4.2.10
Architect's Relationship with Contractor
1.1.2, 1.5, 2.3.3, 3.1.3, 3.2.2, 3.2.3, 3.2.4, 3.3.1, 3.4.2, 3.5, 3.7.4, 3.7.5, 3.9.2, 3.9.3, 3.10, 3.11, 3.12, 3.16, 3.18, 4.1.2, 4.2, 5.2, 6.2.2, 7, 8.3.1, 9.2, 9.3, 9.4, 9.5, 9.7, 9.8, 9.9, 10.2.6, 10.3, 11.3, 12, 13.3.2, 13.4, 15.2
Architect's Relationship with Subcontractors
1.1.2, 4.2.3, 4.2.4, 4.2.6, 9.6.3, 9.6.4, 11.3
Architect's Representations
9.4.2, 9.5.1, 9.10.1
Architect's Site Visits
3.7.4, 4.2.2, 4.2.9, 9.4.2, 9.5.1, 9.9.2, 9.10.1, 13.4
Asbestos
10.3.1
Attorneys' Fees
3.18.1, 9.6.8, 9.10.2, 10.3.3
Award of Separate Contracts
6.1.1, 6.1.2
Award of Subcontracts and Other Contracts for Portions of the Work
5.2
Basic Definitions
1.1
Bidding Requirements
1.1.1
Binding Dispute Resolution
8.3.1, 9.7, 11.5, 13.1, 15.1.2, 15.1.3, 15.2.1, 15.2.5, 15.2.6.1, 15.3.1, 15.3.2, 15.3.3, 15.4.1
Bonds, Lien
7.3.4.4, 9.6.8, 9.10.2, 9.10.3
Bonds, Performance, and Payment
7.3.4.4, 9.6.7, 9.10.3, **11.1.2**, 11.1.3, **11.5**
Building Information Models Use and Reliance
1.8
Building Permit
3.7.1
Capitalization
1.3
Certificate of Substantial Completion
9.8.3, 9.8.4, 9.8.5
Certificates for Payment
4.2.1, 4.2.5, 4.2.9, 9.3.3, **9.4**, 9.5, 9.6.1, 9.6.6, 9.7, 9.10.1, 9.10.3, 14.1.1.3, 14.2.4, 15.1.4
Certificates of Inspection, Testing or Approval
13.4.4
Certificates of Insurance
9.10.2

AIA Document A201 – 2017. Copyright © 1911, 1915, 1918, 1925, 1937, 1951, 1958, 1961, 1963, 1966, 1970, 1976, 1987, 1997, 2007 and 2017. All rights reserved. "The American Institute of Architects," "American Institute of Architects," "AIA," the AIA Logo, and "AIA Contract Documents" are trademarks of The American Institute of Architects. This document was produced at 18:01:06 CST on 11/09/2026 under Subscription No.20240070886 which expires on 10/15/2027, is not for resale, is licensed for one-time use only, and may only be used in accordance with the AIA Contract Documents® Terms of Service. To report copyright violations, e-mail docinfo@aiacontracts.com.
User Notes: (6af25eb25a16cb79a1e84ce5)

Change Orders
1.1.1, 3.4.2, 3.7.4, 3.8.2.3, 3.11, 3.12.8, 4.2.8, 5.2.3, 7.1.2, 7.1.3, **7.2**, 7.3.2, 7.3.7, 7.3.9, 7.3.10, 8.3.1, 9.3.1.1, 9.10.3, 10.3.2, 11.2, 11.5, 12.1.2
Change Orders, Definition of
7.2.1
CHANGES IN THE WORK
2.2.2, 3.11, 4.2.8, **7**, 7.2.1, 7.3.1, 7.4, 8.3.1, 9.3.1.1, 11.5
Claims, Definition of
15.1.1
Claims, Notice of
1.6.2, 15.1.3
CLAIMS AND DISPUTES
3.2.4, 6.1.1, 6.3, 7.3.9, 9.3.3, 9.10.4, 10.3.3, **15**, 15.4
Claims and Timely Assertion of Claims
15.4.1
Claims for Additional Cost
3.2.4, 3.3.1, 3.7.4, 7.3.9, 9.5.2, 10.2.5, 10.3.2, **15.1.5**
Claims for Additional Time
3.2.4, 3.3.1, 3.7.4, 6.1.1, 8.3.2, 9.5.2, 10.3.2, **15.1.6**
Concealed or Unknown Conditions, Claims for
3.7.4
Claims for Damages
3.2.4, 3.18, 8.3.3, 9.5.1, 9.6.7, 10.2.5, 10.3.3, 11.3, 11.3.2, 14.2.4, 15.1.7
Claims Subject to Arbitration
15.4.1
Cleaning Up
3.15, 6.3
Commencement of the Work, Conditions Relating to
2.2.1, 3.2.2, 3.4.1, 3.7.1, 3.10.1, 3.12.6, 5.2.1, 5.2.3, 6.2.2, 8.1.2, 8.2.2, 8.3.1, 11.1, 11.2, **15.1.5**
Commencement of the Work, Definition of
8.1.2
Communications
3.9.1, **4.2.4**
Completion, Conditions Relating to
3.4.1, 3.11, 3.15, 4.2.2, 4.2.9, 8.2, 9.4.2, 9.8, 9.9.1, 9.10, 12.2, 14.1.2, 15.1.2
COMPLETION, PAYMENTS AND
9
Completion, Substantial
3.10.1, 4.2.9, 8.1.1, 8.1.3, 8.2.3, 9.4.2, 9.8, 9.9.1, 9.10.3, 12.2, 15.1.2
Compliance with Laws
2.3.2, 3.2.3, 3.6, 3.7, 3.12.10, 3.13, 9.6.4, 10.2.2, 13.1, 13.3, 13.4.1, 13.4.2, 13.5, 14.1.1, 14.2.1.3, 15.2.8, 15.4.2, 15.4.3
Concealed or Unknown Conditions
3.7.4, 4.2.8, 8.3.1, 10.3
Conditions of the Contract
1.1.1, 6.1.1, 6.1.4
Consent, Written
3.4.2, 3.14.2, 4.1.2, 9.8.5, 9.9.1, 9.10.2, 9.10.3, 13.2, 15.4.4.2
Consolidation or Joinder
15.4.4
CONSTRUCTION BY OWNER OR BY SEPARATE CONTRACTORS
1.1.4, **6**
Construction Change Directive, Definition of
7.3.1

AIA Document A201 – 2017. Copyright © 1911, 1915, 1918, 1925, 1937, 1951, 1958, 1961, 1963, 1966, 1970, 1976, 1987, 1997, 2007 and 2017. All rights reserved. "The American Institute of Architects," "American Institute of Architects," "AIA," the AIA Logo, and "AIA Contract Documents" are trademarks of The American Institute of Architects. This document was produced at 18:01:06 CST on 11/09/2026 under Subscription No.20240070886 which expires on 10/15/2027, is not for resale, is licensed for one-time use only, and may only be used in accordance with the AIA Contract Documents® Terms of Service. To report copyright violations, e-mail docinfo@aiacontracts.com.
User Notes: (6af25eb25a16cb79a1e84ce5)

Construction Change Directives
1.1.1, 3.4.2, 3.11, 3.12.8, 4.2.8, 7.1.1, 7.1.2, 7.1.3, **7.3**, 9.3.1.1
Construction Schedules, Contractor's
3.10, 3.11, 3.12.1, 3.12.2, 6.1.3, 15.1.6.2
Contingent Assignment of Subcontracts
5.4, 14.2.2.2
Continuing Contract Performance
15.1.4
Contract, Definition of
1.1.2
CONTRACT, TERMINATION OR SUSPENSION OF THE
5.4.1.1, 5.4.2, 11.5, **14**
Contract Administration
3.1.3, 4, 9.4, 9.5
Contract Award and Execution, Conditions Relating to
3.7.1, 3.10, 5.2, 6.1
Contract Documents, Copies Furnished and Use of
1.5.2, 2.3.6, 5.3
Contract Documents, Definition of
1.1.1
Contract Sum
2.2.2, 2.2.4, 3.7.4, 3.7.5, 3.8, 3.10.2, 5.2.3, 7.3, 7.4, **9.1**, 9.2, 9.4.2, 9.5.1.4, 9.6.7, 9.7, 10.3.2, 11.5, 12.1.2, 12.3, 14.2.4, 14.3.2, 15.1.4.2, **15.1.5, 15.2.5**
Contract Sum, Definition of
9.1
Contract Time
1.1.4, 2.2.1, 2.2.2, 3.7.4, 3.7.5, 3.10.2, 5.2.3, 6.1.5, 7.2.1.3, 7.3.1, 7.3.5, 7.3.6, 7, 7, 7.3.10, 7.4, 8.1.1, 8.2.1, 8.2.3, 8.3.1, 9.5.1, 9.7, 10.3.2, 12.1.1, 12.1.2, 14.3.2, 15.1.4.2, 15.1.6.1, 15.2.5
Contract Time, Definition of
8.1.1
CONTRACTOR
3
Contractor, Definition of
3.1, 6.1.2
Contractor's Construction and Submittal Schedules
3.10, 3.12.1, 3.12.2, 4.2.3, 6.1.3, 15.1.6.2
Contractor's Employees
2.2.4, 3.3.2, 3.4.3, 3.8.1, 3.9, 3.18.2, 4.2.3, 4.2.6, 10.2, 10.3, 11.3, 14.1, 14.2.1.1
Contractor's Liability Insurance
11.1
Contractor's Relationship with Separate Contractors and Owner's Forces
3.12.5, 3.14.2, 4.2.4, 6, 11.3, 12.2.4
Contractor's Relationship with Subcontractors
1.2.2, 2.2.4, 3.3.2, 3.18.1, 3.18.2, 4.2.4, 5, 9.6.2, 9.6.7, 9.10.2, 11.2, 11.3, 11.4
Contractor's Relationship with the Architect
1.1.2, 1.5, 2.3.3, 3.1.3, 3.2.2, 3.2.3, 3.2.4, 3.3.1, 3.4.2, 3.5.1, 3.7.4, 3.10, 3.11, 3.12, 3.16, 3.18, 4.2, 5.2, 6.2.2, 7, 8.3.1, 9.2, 9.3, 9.4, 9.5, 9.7, 9.8, 9.9, 10.2.6, 10.3, 11.3, 12, 13.4, 15.1.3, 15.2.1
Contractor's Representations
3.2.1, 3.2.2, 3.5, 3.12.6, 6.2.2, 8.2.1, 9.3.3, 9.8.2
Contractor's Responsibility for Those Performing the Work
3.3.2, 3.18, 5.3, 6.1.3, 6.2, 9.5.1, 10.2.8
Contractor's Review of Contract Documents
3.2
Contractor's Right to Stop the Work
2.2.2, 9.7

AIA Document A201 – 2017. Copyright © 1911, 1915, 1918, 1925, 1937, 1951, 1958, 1961, 1963, 1966, 1970, 1976, 1987, 1997, 2007 and 2017. All rights reserved. "The American Institute of Architects," "American Institute of Architects," "AIA," the AIA Logo, and "AIA Contract Documents" are trademarks of The American Institute of Architects. This document was produced at 18:01:06 CST on 11/09/2026 under Subscription No.20240070886 which expires on 10/15/2027, is not for resale, is licensed for one-time use only, and may only be used in accordance with the AIA Contract Documents® Terms of Service. To report copyright violations, e-mail docinfo@aiacontracts.com.
User Notes: (6af25eb25a16cb79a1e84ce5)

Contractor's Right to Terminate the Contract
14.1
Contractor's Submittals
3.10, 3.11, 3.12, 4.2.7, 5.2.1, 5.2.3, 9.2, 9.3, 9.8.2, 9.8.3, 9.9.1, 9.10.2, 9.10.3
Contractor's Superintendent
3.9, 10.2.6
Contractor's Supervision and Construction Procedures
1.2.2, 3.3, 3.4, 3.12.10, 4.2.2, 4.2.7, 6.1.3, 6.2.4, 7.1.3, 7.3.4, 7.3.6, 8.2, 10, 12, 14, 15.1.4
Coordination and Correlation
1.2, 3.2.1, 3.3.1, 3.10, 3.12.6, 6.1.3, 6.2.1
Copies Furnished of Drawings and Specifications
1.5, 2.3.6, 3.11
Copyrights
1.5, **3.17**
Correction of Work
2.5, 3.7.3, 9.4.2, 9.8.2, 9.8.3, 9.9.1, 12.1.2, **12.2**, 12.3, 15.1.3.1, 15.1.3.2, 15.2.1
Correlation and Intent of the Contract Documents
1.2
Cost, Definition of
7.3.4
Costs
2.5, 3.2.4, 3.7.3, 3.8.2, 3.15.2, 5.4.2, 6.1.1, 6.2.3, 7.3.3.3, 7.3.4, 7.3.8, 7.3.9, 9.10.2, 10.3.2, 10.3.6, 11.2, 12.1.2, 12.2.1, 12.2.4, 13.4, 14
Cutting and Patching
3.14, 6.2.5
Damage to Construction of Owner or Separate Contractors
3.14.2, 6.2.4, 10.2.1.2, 10.2.5, 10.4, 12.2.4
Damage to the Work
3.14.2, 9.9.1, 10.2.1.2, 10.2.5, 10.4, 12.2.4
Damages, Claims for
3.2.4, 3.18, 6.1.1, 8.3.3, 9.5.1, 9.6.7, 10.3.3, 11.3.2, 11.3, 14.2.4, 15.1.7
Damages for Delay
6.2.3, 8.3.3, 9.5.1.6, 9.7, 10.3.2, 14.3.2
Date of Commencement of the Work, Definition of
8.1.2
Date of Substantial Completion, Definition of
8.1.3
Day, Definition of
8.1.4
Decisions of the Architect
3.7.4, 4.2.6, 4.2.7, 4.2.11, 4.2.12, 4.2.13, 6.3, 7.3.4, 7.3.9, 8.1.3, 8.3.1, 9.2, 9.4, 9.5.1, 9.8.4, 9.9.1, 13.4.2, 14.2.2, 14.2.4, 15.1, 15.2
Decisions to Withhold Certification
9.4.1, **9.5**, 9.7, 14.1.1.3
Defective or Nonconforming Work, Acceptance, Rejection and Correction of
2.5, 3.5, 4.2.6, 6.2.3, 9.5.1, 9.5.3, 9.6.6, 9.8.2, 9.9.3, 9.10.4, 12.2.1
Definitions
1.1, 2.1.1, 3.1.1, 3.5, 3.12.1, 3.12.2, 3.12.3, 4.1.1, 5.1, 6.1.2, 7.2.1, 7.3.1, 8.1, 9.1, 9.8.1, 15.1.1
Delays and Extensions of Time
3.2, 3.7.4, 5.2.3, 7.2.1, 7.3.1, **7.4**, **8.3**, 9.5.1, **9.7**, 10.3.2, **10.4**, 14.3.2, **15.1.6**, 15.2.5
Digital Data Use and Transmission
1.7
Disputes
6.3, 7.3.9, 15.1, 15.2

AIA Document A201 – 2017. Copyright © 1911, 1915, 1918, 1925, 1937, 1951, 1958, 1961, 1963, 1966, 1970, 1976, 1987, 1997, 2007 and 2017. All rights reserved. "The American Institute of Architects," "American Institute of Architects," "AIA," the AIA Logo, and "AIA Contract Documents" are trademarks of The American Institute of Architects. This document was produced at 18:01:06 CST on 11/09/2026 under Subscription No.20240070886 which expires on 10/15/2027, is not for resale, is licensed for one-time use only, and may only be used in accordance with the AIA Contract Documents® Terms of Service. To report copyright violations, e-mail docinfo@aiacontracts.com.
User Notes: (6af25eb25a16cb79a1e84ce5)

Documents and Samples at the Site
3.11
Drawings, Definition of
1.1.5
Drawings and Specifications, Use and Ownership of
3.11
Effective Date of Insurance
8.2.2
Emergencies
10.4, 14.1.1.2, **15.1.5**
Employees, Contractor's
3.3.2, 3.4.3, 3.8.1, 3.9, 3.18.2, 4.2.3, 4.2.6, 10.2, 10.3.3, 11.3, 14.1, 14.2.1.1
Equipment, Labor, or Materials
1.1.3, 1.1.6, 3.4, 3.5, 3.8.2, 3.8.3, 3.12, 3.13, 3.15.1, 4.2.6, 4.2.7, 5.2.1, 6.2.1, 7.3.4, 9.3.2, 9.3.3, 9.5.1.3, 9.10.2, 10.2.1, 10.2.4, 14.2.1.1, 14.2.1.2
Execution and Progress of the Work
1.1.3, 1.2.1, 1.2.2, 2.3.4, 2.3.6, 3.1, 3.3.1, 3.4.1, 3.7.1, 3.10.1, 3.12, 3.14, 4.2, 6.2.2, 7.1.3, 7.3.6, 8.2, 9.5.1, 9.9.1, 10.2, 10.3, 12.1, 12.2, 14.2, 14.3.1, 15.1.4
Extensions of Time
3.2.4, 3.7.4, 5.2.3, 7.2.1, 7.3, 7.4, 9.5.1, 9.7, 10.3.2, 10.4, 14.3, 15.1.6, **15.2.5**
Failure of Payment
9.5.1.3, **9.7**, 9.10.2, 13.5, 14.1.1.3, 14.2.1.2
Faulty Work
(See Defective or Nonconforming Work)
Final Completion and Final Payment
4.2.1, 4.2.9, 9.8.2, **9.10**, 12.3, 14.2.4, 14.4.3
Financial Arrangements, Owner's
2.2.1, 13.2.2, 14.1.1.4
GENERAL PROVISIONS
1
Governing Law
13.1
Guarantees (See Warranty)
Hazardous Materials and Substances
10.2.4, **10.3**
Identification of Subcontractors and Suppliers
5.2.1
Indemnification
3.17, **3.18**, 9.6.8, 9.10.2, 10.3.3, 11.3
Information and Services Required of the Owner
2.1.2, **2.2**, 2.3, 3.2.2, 3.12.10.1, 6.1.3, 6.1.4, 6.2.5, 9.6.1, 9.9.2, 9.10.3, 10.3.3, 11.2, 13.4.1, 13.4.2, 14.1.1.4, 14.1.4, 15.1.4
Initial Decision
15.2
Initial Decision Maker, Definition of
1.1.8
Initial Decision Maker, Decisions
14.2.4, 15.1.4.2, 15.2.1, 15.2.2, 15.2.3, 15.2.4, 15.2.5
Initial Decision Maker, Extent of Authority
14.2.4, 15.1.4.2, 15.2.1, 15.2.2, 15.2.3, 15.2.4, 15.2.5
Injury or Damage to Person or Property
10.2.8, 10.4
Inspections
3.1.3, 3.3.3, 3.7.1, 4.2.2, 4.2.6, 4.2.9, 9.4.2, 9.8.3, 9.9.2, 9.10.1, 12.2.1, 13.4

AIA Document A201 – 2017. Copyright © 1911, 1915, 1918, 1925, 1937, 1951, 1958, 1961, 1963, 1966, 1970, 1976, 1987, 1997, 2007 and 2017. All rights reserved. "The American Institute of Architects," "American Institute of Architects," "AIA," the AIA Logo, and "AIA Contract Documents" are trademarks of The American Institute of Architects. This document was produced at 18:01:06 CST on 11/09/2026 under Subscription No.20240070886 which expires on 10/15/2027, is not for resale, is licensed for one-time use only, and may only be used in accordance with the AIA Contract Documents® Terms of Service. To report copyright violations, e-mail docinfo@aiacontracts.com.
User Notes: (6af25eb25a16cb79a1e84ce5)

Instructions to Bidders
1.1.1
Instructions to the Contractor
3.2.4, 3.3.1, 3.8.1, 5.2.1, 7, 8.2.2, 12, 13.4.2
Instruments of Service, Definition of
1.1.7
Insurance
6.1.1, 7.3.4, 8.2.2, 9.3.2, 9.8.4, 9.9.1, 9.10.2, 10.2.5, **11**
Insurance, Notice of Cancellation or Expiration
11.1.4, 11.2.3
Insurance, Contractor's Liability
11.1
Insurance, Effective Date of
8.2.2, 14.4.2
Insurance, Owner's Liability
11.2
Insurance, Property
10.2.5, 11.2, 11.4, 11.5
Insurance, Stored Materials
9.3.2
INSURANCE AND BONDS
11
Insurance Companies, Consent to Partial Occupancy
9.9.1
Insured loss, Adjustment and Settlement of
11.5
Intent of the Contract Documents
1.2.1, 4.2.7, 4.2.12, 4.2.13
Interest
13.5
Interpretation
1.1.8, 1.2.3, **1.4**, 4.1.1, 5.1, 6.1.2, 15.1.1
Interpretations, Written
4.2.11, 4.2.12
Judgment on Final Award
15.4.2
Labor and Materials, Equipment
1.1.3, 1.1.6, **3.4**, 3.5, 3.8.2, 3.8.3, 3.12, 3.13, 3.15.1, 5.2.1, 6.2.1, 7.3.4, 9.3.2, 9.3.3, 9.5.1.3, 9.10.2, 10.2.1, 10.2.4, 14.2.1.1, 14.2.1.2
Labor Disputes
8.3.1
Laws and Regulations
1.5, 2.3.2, 3.2.3, 3.2.4, 3.6, 3.7, 3.12.10, 3.13, 9.6.4, 9.9.1, 10.2.2, 13.1, 13.3.1, 13.4.2, 13.5, 14, 15.2.8, 15.4
Liens
2.1.2, 9.3.1, 9.3.3, 9.6.8, 9.10.2, 9.10.4, 15.2.8
Limitations, Statutes of
12.2.5, 15.1.2, 15.4.1.1
Limitations of Liability
3.2.2, 3.5, 3.12.10, 3.12.10.1, 3.17, 3.18.1, 4.2.6, 4.2.7, 6.2.2, 9.4.2, 9.6.4, 9.6.7, 9.6.8, 10.2.5, 10.3.3, 11.3, 12.2.5, 13.3.1
Limitations of Time
2.1.2, 2.2, 2.5, 3.2.2, 3.10, 3.11, 3.12.5, 3.15.1, 4.2.7, 5.2, 5.3, 5.4.1, 6.2.4, 7.3, 7.4, 8.2, 9.2, 9.3.1, 9.3.3, 9.4.1, 9.5, 9.6, 9.7, 9.8, 9.9, 9.10, 12.2, 13.4, 14, 15, 15.1.2, 15.1.3, 15.1.5
Materials, Hazardous
10.2.4, **10.3**

AIA Document A201 – 2017. Copyright © 1911, 1915, 1918, 1925, 1937, 1951, 1958, 1961, 1963, 1966, 1970, 1976, 1987, 1997, 2007 and 2017. All rights reserved. "The American Institute of Architects," "American Institute of Architects," "AIA," the AIA Logo, and "AIA Contract Documents" are trademarks of The American Institute of Architects. This document was produced at 18:01:06 CST on 11/09/2026 under Subscription No.20240070886 which expires on 10/15/2027, is not for resale, is licensed for one-time use only, and may only be used in accordance with the AIA Contract Documents® Terms of Service. To report copyright violations, e-mail docinfo@aiacontracts.com.
User Notes: (6af25eb25a16cb79a1e84ce5)

Materials, Labor, Equipment and
1.1.3, 1.1.6, 3.4.1, 3.5, 3.8.2, 3.8.3, 3.12, 3.13, 3.15.1, 5.2.1, 6.2.1, 7.3.4, 9.3.2, 9.3.3, 9.5.1.3, 9.10.2, 10.2.1.2, 10.2.4, 14.2.1.1, 14.2.1.2
Means, Methods, Techniques, Sequences and Procedures of Construction
3.3.1, 3.12.10, 4.2.2, 4.2.7, 9.4.2
Mechanic's Lien
2.1.2, 9.3.1, 9.3.3, 9.6.8, 9.10.2, 9.10.4, 15.2.8
Mediation
8.3.1, 15.1.3.2, 15.2.1, 15.2.5, 15.2.6, **15.3**, 15.4.1, 15.4.1.1
Minor Changes in the Work
1.1.1, 3.4.2, 3.12.8, 4.2.8, 7.1, **7.4**
MISCELLANEOUS PROVISIONS
13
Modifications, Definition of
1.1.1
Modifications to the Contract
1.1.1, 1.1.2, 2.5, 3.11, 4.1.2, 4.2.1, 5.2.3, 7, 8.3.1, 9.7, 10.3.2
Mutual Responsibility
6.2
Nonconforming Work, Acceptance of
9.6.6, 9.9.3, **12.3**
Nonconforming Work, Rejection and Correction of
2.4, 2.5, 3.5, 4.2.6, 6.2.4, 9.5.1, 9.8.2, 9.9.3, 9.10.4, 12.2
Notice
1.6, 1.6.1, 1.6.2, 2.1.2, 2.2.2., 2.2.3, 2.2.4, 2.5, 3.2.4, 3.3.1, 3.7.4, 3.7.5, 3.9.2, 3.12.9, 3.12.10, 5.2.1, 7.4, 8.2.2 9.6.8, 9.7, 9.10.1, 10.2.8, 10.3.2, 11.5, 12.2.2.1, 13.4.1, 13.4.2, 14.1, 14.2.2, 14.4.2, 15.1.3, 15.1.5, 15.1.6, 15.4.1
Notice of Cancellation or Expiration of Insurance
11.1.4, 11.2.3
Notice of Claims
1.6.2, 2.1.2, 3.7.4, 9.6.8, 10.2.8, **15.1.3**, 15.1.5, 15.1.6, 15.2.8, 15.3.2, 15.4.1
Notice of Testing and Inspections
13.4.1, 13.4.2
Observations, Contractor's
3.2, 3.7.4
Occupancy
2.3.1, 9.6.6, 9.8
Orders, Written
1.1.1, 2.4, 3.9.2, 7, 8.2.2, 11.5, 12.1, 12.2.2.1, 13.4.2, 14.3.1
OWNER
2
Owner, Definition of
2.1.1
Owner, Evidence of Financial Arrangements
2.2, 13.2.2, 14.1.1.4
Owner, Information and Services Required of the
2.1.2, **2.2**, 2.3, 3.2.2, 3.12.10, 6.1.3, 6.1.4, 6.2.5, 9.3.2, 9.6.1, 9.6.4, 9.9.2, 9.10.3, 10.3.3, 11.2, 13.4.1, 13.4.2, 14.1.1.4, 14.1.4, 15.1.4
Owner's Authority
1.5, 2.1.1, 2.3.32.4, 2.5, 3.4.2, 3.8.1, 3.12.10, 3.14.2, 4.1.2, 4.2.4, 4.2.9, 5.2.1, 5.2.4, 5.4.1, 6.1, 6.3, 7.2.1, 7.3.1, 8.2.2, 8.3.1, 9.3.2, 9.5.1, 9.6.4, 9.9.1, 9.10.2, 10.3.2, 11.4, 11.5, 12.2.2, 12.3, 13.2.2, 14.3, 14.4, 15.2.7
Owner's Insurance
11.2
Owner's Relationship with Subcontractors
1.1.2, 5.2, 5.3, 5.4, 9.6.4, 9.10.2, 14.2.2

AIA Document A201 – 2017. Copyright © 1911, 1915, 1918, 1925, 1937, 1951, 1958, 1961, 1963, 1966, 1970, 1976, 1987, 1997, 2007 and 2017. All rights reserved. "The American Institute of Architects," "American Institute of Architects," "AIA," the AIA Logo, and "AIA Contract Documents" are trademarks of The American Institute of Architects. This document was produced at 18:01:06 CST on 11/09/2026 under Subscription No.20240070886 which expires on 10/15/2027, is not for resale, is licensed for one-time use only, and may only be used in accordance with the AIA Contract Documents® Terms of Service. To report copyright violations, e-mail docinfo@aiacontracts.com.
User Notes: (6af25eb25a16cb79a1e84ce5)

Owner's Right to Carry Out the Work
2.5, 14.2.2
Owner's Right to Clean Up
6.3
Owner's Right to Perform Construction and to Award Separate Contracts
6.1
Owner's Right to Stop the Work
2.4
Owner's Right to Suspend the Work
14.3
Owner's Right to Terminate the Contract
14.2, 14.4
Ownership and Use of Drawings, Specifications and Other Instruments of Service
1.1.1, 1.1.6, 1.1.7, **1.5**, 2.3.6, 3.2.2, 3.11, 3.17, 4.2.12, 5.3
Partial Occupancy or Use
9.6.6, **9.9**
Patching, Cutting and
3.14, 6.2.5
Patents
3.17
Payment, Applications for
4.2.5, 7.3.9, 9.2, **9.3**, 9.4, 9.5, 9.6.3, 9.7, 9.8.5, 9.10.1, 14.2.3, 14.2.4, 14.4.3
Payment, Certificates for
4.2.5, 4.2.9, 9.3.3, **9.4**, 9.5, 9.6.1, 9.6.6, 9.7, 9.10.1, 9.10.3, 14.1.1.3, 14.2.4
Payment, Failure of
9.5.1.3, **9.7**, 9.10.2, 13.5, 14.1.1.3, 14.2.1.2
Payment, Final
4.2.1, 4.2.9, **9.10**, 12.3, 14.2.4, 14.4.3
Payment Bond, Performance Bond and
7.3.4.4, 9.6.7, 9.10.3, **11.1.2**
Payments, Progress
9.3, **9.6**, 9.8.5, 9.10.3, 14.2.3, 15.1.4
PAYMENTS AND COMPLETION
9
Payments to Subcontractors
5.4.2, 9.5.1.3, 9.6.2, 9.6.3, 9.6.4, 9.6.7, 14.2.1.2
PCB
10.3.1
Performance Bond and Payment Bond
7.3.4.4, 9.6.7, 9.10.3, **11.1.2**
Permits, Fees, Notices and Compliance with Laws
2.3.1, **3.7**, 3.13, 7.3.4.4, 10.2.2
PERSONS AND PROPERTY, PROTECTION OF
10
Polychlorinated Biphenyl
10.3.1
Product Data, Definition of
3.12.2
Product Data and Samples, Shop Drawings
3.11, **3.12**, 4.2.7
Progress and Completion
4.2.2, **8.2**, 9.8, 9.9.1, 14.1.4, 15.1.4
Progress Payments
9.3, **9.6**, 9.8.5, 9.10.3, 14.2.3, 15.1.4

AIA Document A201 – 2017. Copyright © 1911, 1915, 1918, 1925, 1937, 1951, 1958, 1961, 1963, 1966, 1970, 1976, 1987, 1997, 2007 and 2017. All rights reserved. "The American Institute of Architects," "American Institute of Architects," "AIA," the AIA Logo, and "AIA Contract Documents" are trademarks of The American Institute of Architects. This document was produced at 18:01:06 CST on 11/09/2026 under Subscription No.20240070886 which expires on 10/15/2027, is not for resale, is licensed for one-time use only, and may only be used in accordance with the AIA Contract Documents® Terms of Service. To report copyright violations, e-mail docinfo@aiacontracts.com.
User Notes: (6af25eb25a16cb79a1e84ce5)

Project, Definition of
1.1.4
Project Representatives
4.2.10
Property Insurance
10.2.5, **11.2**
Proposal Requirements
1.1.1
PROTECTION OF PERSONS AND PROPERTY
10
Regulations and Laws
1.5, 2.3.2, 3.2.3, 3.6, 3.7, 3.12.10, 3.13, 9.6.4, 9.9.1, 10.2.2, 13.1, 13.3, 13.4.1, 13.4.2, 13.5, 14, 15.2.8, 15.4
Rejection of Work
4.2.6, 12.2.1
Releases and Waivers of Liens
9.3.1, 9.10.2
Representations
3.2.1, 3.5, 3.12.6, 8.2.1, 9.3.3, 9.4.2, 9.5.1, 9.10.1
Representatives
2.1.1, 3.1.1, 3.9, 4.1.1, 4.2.10, 13.2.1
Responsibility for Those Performing the Work
3.3.2, 3.18, 4.2.2, 4.2.3, 5.3, 6.1.3, 6.2, 6.3, 9.5.1, 10
Retainage
9.3.1, 9.6.2, 9.8.5, 9.9.1, 9.10.2, 9.10.3
Review of Contract Documents and Field Conditions by Contractor
3.2, 3.12.7, 6.1.3
Review of Contractor's Submittals by Owner and Architect
3.10.1, 3.10.2, 3.11, 3.12, 4.2, 5.2, 6.1.3, 9.2, 9.8.2
Review of Shop Drawings, Product Data and Samples by Contractor
3.12
Rights and Remedies
1.1.2, 2.4, 2.5, 3.5, 3.7.4, 3.15.2, 4.2.6, 5.3, 5.4, 6.1, 6.3, 7.3.1, 8.3, 9.5.1, 9.7, 10.2.5, 10.3, 12.2.1, 12.2.2, 12.2.4, **13.3**, 14, 15.4
Royalties, Patents and Copyrights
3.17
Rules and Notices for Arbitration
15.4.1
Safety of Persons and Property
10.2, 10.4
Safety Precautions and Programs
3.3.1, 4.2.2, 4.2.7, 5.3, **10.1**, 10.2, 10.4
Samples, Definition of
3.12.3
Samples, Shop Drawings, Product Data and
3.11, **3.12**, 4.2.7
Samples at the Site, Documents and
3.11
Schedule of Values
9.2, 9.3.1
Schedules, Construction
3.10, 3.12.1, 3.12.2, 6.1.3, 15.1.6.2
Separate Contracts and Contractors
1.1.4, 3.12.5, 3.14.2, 4.2.4, 4.2.7, 6, 8.3.1, 12.1.2
Separate Contractors, Definition of
6.1.1

AIA Document A201 – 2017. Copyright © 1911, 1915, 1918, 1925, 1937, 1951, 1958, 1961, 1963, 1966, 1970, 1976, 1987, 1997, 2007 and 2017. All rights reserved. "The American Institute of Architects," "American Institute of Architects," "AIA," the AIA Logo, and "AIA Contract Documents" are trademarks of The American Institute of Architects. This document was produced at 18:01:06 CST on 11/09/2026 under Subscription No.20240070886 which expires on 10/15/2027, is not for resale, is licensed for one-time use only, and may only be used in accordance with the AIA Contract Documents® Terms of Service. To report copyright violations, e-mail docinfo@aiacontracts.com.
User Notes: (6af25eb25a16cb79a1e84ce5)

Shop Drawings, Definition of
3.12.1
Shop Drawings, Product Data and Samples
3.11, **3.12**, 4.2.7
Site, Use of
3.13, 6.1.1, 6.2.1
Site Inspections
3.2.2, 3.3.3, 3.7.1, 3.7.4, 4.2, 9.9.2, 9.4.2, 9.10.1, 13.4
Site Visits, Architect's
3.7.4, 4.2.2, 4.2.9, 9.4.2, 9.5.1, 9.9.2, 9.10.1, 13.4
Special Inspections and Testing
4.2.6, 12.2.1, 13.4
Specifications, Definition of
1.1.6
Specifications
1.1.1, **1.1.6**, 1.2.2, 1.5, 3.12.10, 3.17, 4.2.14
Statute of Limitations
15.1.2, 15.4.1.1
Stopping the Work
2.2.2, 2.4, 9.7, 10.3, 14.1
Stored Materials
6.2.1, 9.3.2, 10.2.1.2, 10.2.4
Subcontractor, Definition of
5.1.1
SUBCONTRACTORS
5
Subcontractors, Work by
1.2.2, 3.3.2, 3.12.1, 3.18, 4.2.3, 5.2.3, 5.3, 5.4, 9.3.1.2, 9.6.7
Subcontractual Relations
5.3, 5.4, 9.3.1.2, 9.6, 9.10, 10.2.1, 14.1, 14.2.1
Submittals
3.10, 3.11, 3.12, 4.2.7, 5.2.1, 5.2.3, 7.3.4, 9.2, 9.3, 9.8, 9.9.1, 9.10.2, 9.10.3
Submittal Schedule
3.10.2, 3.12.5, 4.2.7
Subrogation, Waivers of
6.1.1, **11.3**
Substances, Hazardous
10.3
Substantial Completion
4.2.9, 8.1.1, 8.1.3, 8.2.3, 9.4.2, **9.8**, 9.9.1, 9.10.3, 12.2, 15.1.2
Substantial Completion, Definition of
9.8.1
Substitution of Subcontractors
5.2.3, 5.2.4
Substitution of Architect
2.3.3
Substitutions of Materials
3.4.2, 3.5, 7.3.8
Sub-subcontractor, Definition of
5.1.2
Subsurface Conditions
3.7.4
Successors and Assigns
13.2

AIA Document A201 – 2017. Copyright © 1911, 1915, 1918, 1925, 1937, 1951, 1958, 1961, 1963, 1966, 1970, 1976, 1987, 1997, 2007 and 2017. All rights reserved. "The American Institute of Architects," "American Institute of Architects," "AIA," the AIA Logo, and "AIA Contract Documents" are trademarks of The American Institute of Architects. This document was produced at 18:01:06 CST on 11/09/2026 under Subscription No.20240070886 which expires on 10/15/2027, is not for resale, is licensed for one-time use only, and may only be used in accordance with the AIA Contract Documents® Terms of Service. To report copyright violations, e-mail docinfo@aiacontracts.com.
User Notes: (6af25eb25a16cb79a1e84ce5)

Superintendent
3.9, 10.2.6
Supervision and Construction Procedures
1.2.2, **3.3**, 3.4, 3.12.10, 4.2.2, 4.2.7, 6.1.3, 6.2.4, 7.1.3, 7.3.4, 8.2, 8.3.1, 9.4.2, 10, 12, 14, 15.1.4
Suppliers
1.5, 3.12.1, 4.2.4, 4.2.6, 5.2.1, 9.3, 9.4.2, 9.5.4, 9.6, 9.10.5, 14.2.1
Surety
5.4.1.2, 9.6.8, 9.8.5, 9.10.2, 9.10.3, 11.1.2, 14.2.2, 15.2.7
Surety, Consent of
9.8.5, 9.10.2, 9.10.3
Surveys
1.1.7, 2.3.4
Suspension by the Owner for Convenience
14.3
Suspension of the Work
3.7.5, 5.4.2, 14.3
Suspension or Termination of the Contract
5.4.1.1, 14
Taxes
3.6, 3.8.2.1, 7.3.4.4
Termination by the Contractor
14.1, 15.1.7
Termination by the Owner for Cause
5.4.1.1, **14.2,** 15.1.7
Termination by the Owner for Convenience
14.4
Termination of the Architect
2.3.3
Termination of the Contractor Employment
14.2.2

TERMINATION OR SUSPENSION OF THE CONTRACT
14
Tests and Inspections
3.1.3, 3.3.3, 3.7.1, 4.2.2, 4.2.6, 4.2.9, 9.4.2, 9.8.3, 9.9.2, 9.10.1, 10.3.2, 12.2.1, **13.4**
TIME
8
Time, Delays and Extensions of
3.2.4, 3.7.4, 5.2.3, 7.2.1, 7.3.1, 7.4, **8.3**, 9.5.1, 9.7, 10.3.2, 10.4, 14.3.2, 15.1.6, 15.2.5
Time Limits
2.1.2, 2.2, 2.5, 3.2.2, 3.10, 3.11, 3.12.5, 3.15.1, 4.2, 5.2, 5.3, 5.4, 6.2.4, 7.3, 7.4, 8.2, 9.2, 9.3.1, 9.3.3, 9.4.1, 9.5, 9.6, 9.7, 9.8, 9.9, 9.10, 12.2, 13.4, 14, 15.1.2, 15.1.3, 15.4
Time Limits on Claims
3.7.4, 10.2.8, 15.1.2, 15.1.3
Title to Work
9.3.2, 9.3.3
UNCOVERING AND CORRECTION OF WORK
12
Uncovering of Work
12.1
Unforeseen Conditions, Concealed or Unknown
3.7.4, 8.3.1, 10.3
Unit Prices
7.3.3.2, 9.1.2

AIA Document A201 – 2017. Copyright © 1911, 1915, 1918, 1925, 1937, 1951, 1958, 1961, 1963, 1966, 1970, 1976, 1987, 1997, 2007 and 2017. All rights reserved. "The American Institute of Architects," "American Institute of Architects," "AIA," the AIA Logo, and "AIA Contract Documents" are trademarks of The American Institute of Architects. This document was produced at 18:01:06 CST on 11/09/2026 under Subscription No.20240070886 which expires on 10/15/2027, is not for resale, is licensed for one-time use only, and may only be used in accordance with the AIA Contract Documents® Terms of Service. To report copyright violations, e-mail docinfo@aiacontracts.com.
User Notes: (6af25eb25a16cb79a1e84ce5)

Use of Documents
1.1.1, 1.5, 2.3.6, 3.12.6, 5.3
Use of Site
3.13, 6.1.1, 6.2.1
Values, Schedule of
9.2, 9.3.1
Waiver of Claims by the Architect
13.3.2
Waiver of Claims by the Contractor
9.10.5, 13.3.2, **15.1.7**
Waiver of Claims by the Owner
9.9.3, 9.10.3, 9.10.4, 12.2.2.1, 13.3.2, 14.2.4, **15.1.7**
Waiver of Consequential Damages
14.2.4, 15.1.7
Waiver of Liens
9.3, 9.10.2, 9.10.4
Waivers of Subrogation
6.1.1, **11.3**
Warranty
3.5, 4.2.9, 9.3.3, 9.8.4, 9.9.1, 9.10.2, 9.10.4, 12.2.2, 15.1.2
Weather Delays
8.3, 15.1.6.2
Work, Definition of
1.1.3
Written Consent
1.5.2, 3.4.2, 3.7.4, 3.12.8, 3.14.2, 4.1.2, 9.3.2, 9.10.3, 13.2, 13.3.2, 15.4.4.2
Written Interpretations
4.2.11, 4.2.12
Written Orders
1.1.1, 2.4, 3.9, 7, 8.2.2, 12.1, 12.2, 13.4.2, 14.3.1

AIA Document A201 – 2017. Copyright © 1911, 1915, 1918, 1925, 1937, 1951, 1958, 1961, 1963, 1966, 1970, 1976, 1987, 1997, 2007 and 2017. All rights reserved. "The American Institute of Architects," "American Institute of Architects," "AIA," the AIA Logo, and "AIA Contract Documents" are trademarks of The American Institute of Architects. This document was produced at 18:01:06 CST on 11/09/2026 under Subscription No.20240070886 which expires on 10/15/2027, is not for resale, is licensed for one-time use only, and may only be used in accordance with the AIA Contract Documents® Terms of Service. To report copyright violations, e-mail docinfo@aiacontracts.com.
User Notes: (6af25eb25a16cb79a1e84ce5)

ARTICLE 1 GENERAL PROVISIONS

§ 1.1 Basic Definitions

§ 1.1.1 The Contract Documents

The Contract Documents are enumerated in the Agreement between the Owner and Contractor (hereinafter the Agreement) and consist of the Agreement, Conditions of the Contract (General, Supplementary and other Conditions), Drawings, Specifications, Addenda issued prior to execution of the Contract, other documents listed in the Agreement, and Modifications issued after execution of the Contract. A Modification is (1) a written amendment to the Contract signed by both parties, (2) a Change Order, (3) a Construction Change Directive, or (4) a written order for a minor change in the Work issued by the Architect. Unless specifically enumerated in the Agreement, the Contract Documents do not include the advertisement or invitation to bid, Instructions to Bidders, sample forms, other information furnished by the Owner in anticipation of receiving bids or proposals, the Contractor's bid or proposal, or portions of Addenda relating to bidding or proposal requirements.

§ 1.1.2 The Contract

The Contract Documents form the Contract for Construction. The Contract represents the entire and integrated agreement between the parties hereto and supersedes prior negotiations, representations, or agreements, either written or oral. The Contract may be amended or modified only by a Modification. The Contract Documents shall not be construed to create a contractual relationship of any kind (1) between the Contractor and the Architect or the Architect's consultants, (2) between the Owner and a Subcontractor or a Sub-subcontractor, (3) between the Owner and the Architect or the Architect's consultants, or (4) between any persons or entities other than the Owner and the Contractor. The Architect shall, however, be entitled to performance and enforcement of obligations under the Contract intended to facilitate performance of the Architect's duties.

§ 1.1.3 The Work

The term "Work" means the construction and services required by the Contract Documents, whether completed or partially completed, and includes all other labor, materials, equipment, and services provided or to be provided by the Contractor to fulfill the Contractor's obligations. The Work may constitute the whole or a part of the Project.

§ 1.1.4 The Project

The Project is the total construction of which the Work performed under the Contract Documents may be the whole or a part and which may include construction by the Owner and by Separate Contractors.

§ 1.1.5 The Drawings

The Drawings are the graphic and pictorial portions of the Contract Documents showing the design, location and dimensions of the Work, generally including plans, elevations, sections, details, schedules, and diagrams.

§ 1.1.6 The Specifications

The Specifications are that portion of the Contract Documents consisting of the written requirements for materials, equipment, systems, standards and workmanship for the Work, and performance of related services.

§ 1.1.7 Instruments of Service

Instruments of Service are representations, in any medium of expression now known or later developed, of the tangible and intangible creative work performed by the Architect and the Architect's consultants under their respective professional services agreements. Instruments of Service may include, without limitation, studies, surveys, models, sketches, drawings, specifications, and other similar materials.

§ 1.1.8 Initial Decision Maker

The Initial Decision Maker is the person identified in the Agreement to render initial decisions on Claims in accordance with Section 15.2. The Initial Decision Maker shall not show partiality to the Owner or Contractor and shall not be liable for results of interpretations or decisions rendered in good faith.

§ 1.2 Correlation and Intent of the Contract Documents

§ 1.2.1 The intent of the Contract Documents is to include all items necessary for the proper execution and completion of the Work by the Contractor. The Contract Documents are complementary, and what is required by one shall be as binding as if required by all; performance by the Contractor shall be required only to the extent

AIA Document A201 – 2017. Copyright © 1911, 1915, 1918, 1925, 1937, 1951, 1958, 1961, 1963, 1966, 1970, 1976, 1987, 1997, 2007 and 2017. All rights reserved. "The American Institute of Architects," "American Institute of Architects," "AIA," the AIA Logo, and "AIA Contract Documents" are trademarks of The American Institute of Architects. This document was produced at 18:01:06 CST on 11/09/2026 under Subscription No.20240070886 which expires on 10/15/2027, is not for resale, is licensed for one-time use only, and may only be used in accordance with the AIA Contract Documents® Terms of Service. To report copyright violations, e-mail docinfo@aiacontracts.com.
User Notes: (6af25eb25a16cb79a1e84ce5)

consistent with the Contract Documents and reasonably inferable from them as being necessary to produce the indicated results.

§ 1.2.1.1 The invalidity of any provision of the Contract Documents shall not invalidate the Contract or its remaining provisions. If it is determined that any provision of the Contract Documents violates any law, or is otherwise invalid or unenforceable, then that provision shall be revised to the extent necessary to make that provision legal and enforceable. In such case the Contract Documents shall be construed, to the fullest extent permitted by law, to give effect to the parties' intentions and purposes in executing the Contract.

§ 1.2.2 Organization of the Specifications into divisions, sections and articles, and arrangement of Drawings shall not control the Contractor in dividing the Work among Subcontractors or in establishing the extent of Work to be performed by any trade.

§ 1.2.3 Unless otherwise stated in the Contract Documents, words that have well-known technical or construction industry meanings are used in the Contract Documents in accordance with such recognized meanings.

§ 1.3 Capitalization

Terms capitalized in these General Conditions include those that are (1) specifically defined, (2) the titles of numbered articles, or (3) the titles of other documents published by the American Institute of Architects.

§ 1.4 Interpretation

In the interest of brevity the Contract Documents frequently omit modifying words such as "all" and "any" and articles such as "the" and "an," but the fact that a modifier or an article is absent from one statement and appears in another is not intended to affect the interpretation of either statement.

§ 1.5 Ownership and Use of Drawings, Specifications, and Other Instruments of Service

§ 1.5.1 The Architect and the Architect's consultants shall be deemed the authors and owners of their respective Instruments of Service, including the Drawings and Specifications, and retain all common law, statutory, and other reserved rights in their Instruments of Service, including copyrights. The Contractor, Subcontractors, Sub-subcontractors, and suppliers shall not own or claim a copyright in the Instruments of Service. Submittal or distribution to meet official regulatory requirements or for other purposes in connection with the Project is not to be construed as publication in derogation of the Architect's or Architect's consultants' reserved rights.

§ 1.5.2 The Contractor, Subcontractors, Sub-subcontractors, and suppliers are authorized to use and reproduce the Instruments of Service provided to them, subject to any protocols established pursuant to Sections 1.7 and 1.8, solely and exclusively for execution of the Work. All copies made under this authorization shall bear the copyright notice, if any, shown on the Instruments of Service. The Contractor, Subcontractors, Sub-subcontractors, and suppliers may not use the Instruments of Service on other projects or for additions to the Project outside the scope of the Work without the specific written consent of the Owner, Architect, and the Architect's consultants.

§ 1.6 Notice

§ 1.6.1 Except as otherwise provided in Section 1.6.2, where the Contract Documents require one party to notify or give notice to the other party, such notice shall be provided in writing to the designated representative of the party to whom the notice is addressed and shall be deemed to have been duly served if delivered in person, by mail, by courier, or by electronic transmission if a method for electronic transmission is set forth in the Agreement.

§ 1.6.2 Notice of Claims as provided in Section 15.1.3 shall be provided in writing and shall be deemed to have been duly served only if delivered to the designated representative of the party to whom the notice is addressed by certified or registered mail, or by courier providing proof of delivery.

§ 1.7 Digital Data Use and Transmission

The parties shall agree upon protocols governing the transmission and use of Instruments of Service or any other information or documentation in digital form. The parties will use AIA Document E203™–2013, Building Information Modeling and Digital Data Exhibit, to establish the protocols for the development, use, transmission, and exchange of digital data.

AIA Document A201 – 2017. Copyright © 1911, 1915, 1918, 1925, 1937, 1951, 1958, 1961, 1963, 1966, 1970, 1976, 1987, 1997, 2007 and 2017. All rights reserved. "The American Institute of Architects," "American Institute of Architects," "AIA," the AIA Logo, and "AIA Contract Documents" are trademarks of The American Institute of Architects. This document was produced at 18:01:06 CST on 11/09/2026 under Subscription No.20240070886 which expires on 10/15/2027, is not for resale, is licensed for one-time use only, and may only be used in accordance with the AIA Contract Documents® Terms of Service. To report copyright violations, e-mail docinfo@aiacontracts.com.
User Notes: (6af25eb25a16cb79a1e84ce5)

§ 1.8 Building Information Models Use and Reliance

Any use of, or reliance on, all or a portion of a building information model without agreement to protocols governing the use of, and reliance on, the information contained in the model and without having those protocols set forth in AIA Document E203™–2013, Building Information Modeling and Digital Data Exhibit, and the requisite AIA Document G202™–2013, Project Building Information Modeling Protocol Form, shall be at the using or relying party's sole risk and without liability to the other party and its contractors or consultants, the authors of, or contributors to, the building information model, and each of their agents and employees.

ARTICLE 2 OWNER

§ 2.1 General

§ 2.1.1 The Owner is the person or entity identified as such in the Agreement and is referred to throughout the Contract Documents as if singular in number. The Owner shall designate in writing a representative who shall have express authority to bind the Owner with respect to all matters requiring the Owner's approval or authorization. Except as otherwise provided in Section 4.2.1, the Architect does not have such authority. The term "Owner" means the Owner or the Owner's authorized representative.

§ 2.1.2 The Owner shall furnish to the Contractor, within fifteen days after receipt of a written request, information necessary and relevant for the Contractor to evaluate, give notice of, or enforce mechanic's lien rights. Such information shall include a correct statement of the record legal title to the property on which the Project is located, usually referred to as the site, and the Owner's interest therein.

§ 2.2 Evidence of the Owner's Financial Arrangements

§ 2.2.1 Prior to commencement of the Work and upon written request by the Contractor, the Owner shall furnish to the Contractor reasonable evidence that the Owner has made financial arrangements to fulfill the Owner's obligations under the Contract. The Contractor shall have no obligation to commence the Work until the Owner provides such evidence. If commencement of the Work is delayed under this Section 2.2.1, the Contract Time shall be extended appropriately.

§ 2.2.2 Following commencement of the Work and upon written request by the Contractor, the Owner shall furnish to the Contractor reasonable evidence that the Owner has made financial arrangements to fulfill the Owner's obligations under the Contract only if (1) the Owner fails to make payments to the Contractor as the Contract Documents require; (2) the Contractor identifies in writing a reasonable concern regarding the Owner's ability to make payment when due; or (3) a change in the Work materially changes the Contract Sum. If the Owner fails to provide such evidence, as required, within fourteen days of the Contractor's request, the Contractor may immediately stop the Work and, in that event, shall notify the Owner that the Work has stopped. However, if the request is made because a change in the Work materially changes the Contract Sum under (3) above, the Contractor may immediately stop only that portion of the Work affected by the change until reasonable evidence is provided. If the Work is stopped under this Section 2.2.2, the Contract Time shall be extended appropriately and the Contract Sum shall be increased by the amount of the Contractor's reasonable costs of shutdown, delay and start-up, plus interest as provided in the Contract Documents.

§ 2.2.3 After the Owner furnishes evidence of financial arrangements under this Section 2.2, the Owner shall not materially vary such financial arrangements without prior notice to the Contractor.

§ 2.2.4 Where the Owner has designated information furnished under this Section 2.2 as "confidential," the Contractor shall keep the information confidential and shall not disclose it to any other person. However, the Contractor may disclose "confidential" information, after seven (7) days' notice to the Owner, where disclosure is required by law, including a subpoena or other form of compulsory legal process issued by a court or governmental entity, or by court or arbitrator(s) order. The Contractor may also disclose "confidential" information to its employees, consultants, sureties, Subcontractors and their employees, Sub-subcontractors, and others who need to know the content of such information solely and exclusively for the Project and who agree to maintain the confidentiality of such information.

AIA Document A201 – 2017. Copyright © 1911, 1915, 1918, 1925, 1937, 1951, 1958, 1961, 1963, 1966, 1970, 1976, 1987, 1997, 2007 and 2017. All rights reserved. "The American Institute of Architects," "American Institute of Architects," "AIA," the AIA Logo, and "AIA Contract Documents" are trademarks of The American Institute of Architects. This document was produced at 18:01:06 CST on 11/09/2026 under Subscription No.20240070886 which expires on 10/15/2027, is not for resale, is licensed for one-time use only, and may only be used in accordance with the AIA Contract Documents® Terms of Service. To report copyright violations, e-mail docinfo@aiacontracts.com.
User Notes: (6af25eb25a16cb79a1e84ce5)

§ 2.3 Information and Services Required of the Owner

§ 2.3.1 Except for permits and fees that are the responsibility of the Contractor under the Contract Documents, including those required under Section 3.7.1, the Owner shall secure and pay for necessary approvals, easements, assessments and charges required for construction, use or occupancy of permanent structures or for permanent changes in existing facilities.

§ 2.3.2 The Owner shall retain an architect lawfully licensed to practice architecture, or an entity lawfully practicing architecture, in the jurisdiction where the Project is located. That person or entity is identified as the Architect in the Agreement and is referred to throughout the Contract Documents as if singular in number.

§ 2.3.3 If the employment of the Architect terminates, the Owner shall employ a successor to whom the Contractor has no reasonable objection and whose status under the Contract Documents shall be that of the Architect.

§ 2.3.4 The Owner shall furnish surveys describing physical characteristics, legal limitations and utility locations for the site of the Project, and a legal description of the site. The Contractor shall be entitled to rely on the accuracy of information furnished by the Owner but shall exercise proper precautions relating to the safe performance of the Work.

§ 2.3.5 The Owner shall furnish information or services required of the Owner by the Contract Documents with reasonable promptness. The Owner shall also furnish any other information or services under the Owner's control and relevant to the Contractor's performance of the Work with reasonable promptness after receiving the Contractor's written request for such information or services.

§ 2.3.6 Unless otherwise provided in the Contract Documents, the Owner shall furnish to the Contractor one copy of the Contract Documents for purposes of making reproductions pursuant to Section 1.5.2.

§ 2.4 Owner's Right to Stop the Work

If the Contractor fails to correct Work that is not in accordance with the requirements of the Contract Documents as required by Section 12.2 or repeatedly fails to carry out Work in accordance with the Contract Documents, the Owner may issue a written order to the Contractor to stop the Work, or any portion thereof, until the cause for such order has been eliminated; however, the right of the Owner to stop the Work shall not give rise to a duty on the part of the Owner to exercise this right for the benefit of the Contractor or any other person or entity, except to the extent required by Section 6.1.3.

§ 2.5 Owner's Right to Carry Out the Work

If the Contractor defaults or neglects to carry out the Work in accordance with the Contract Documents and fails within a ten-day period after receipt of notice from the Owner to commence and continue correction of such default or neglect with diligence and promptness, the Owner may, without prejudice to other remedies the Owner may have, correct such default or neglect. Such action by the Owner and amounts charged to the Contractor are both subject to prior approval of the Architect and the Architect may, pursuant to Section 9.5.1, withhold or nullify a Certificate for Payment in whole or in part, to the extent reasonably necessary to reimburse the Owner for the reasonable cost of correcting such deficiencies, including Owner's expenses and compensation for the Architect's additional services made necessary by such default, neglect, or failure. If current and future payments are not sufficient to cover such amounts, the Contractor shall pay the difference to the Owner. If the Contractor disagrees with the actions of the Owner or the Architect, or the amounts claimed as costs to the Owner, the Contractor may file a Claim pursuant to Article 15.

ARTICLE 3 CONTRACTOR

§ 3.1 General

§ 3.1.1 The Contractor is the person or entity identified as such in the Agreement and is referred to throughout the Contract Documents as if singular in number. The Contractor shall be lawfully licensed, if required in the jurisdiction where the Project is located. The Contractor shall designate in writing a representative who shall have express authority to bind the Contractor with respect to all matters under this Contract. The term "Contractor" means the Contractor or the Contractor's authorized representative.

AIA Document A201 – 2017. Copyright © 1911, 1915, 1918, 1925, 1937, 1951, 1958, 1961, 1963, 1966, 1970, 1976, 1987, 1997, 2007 and 2017. All rights reserved. "The American Institute of Architects," "American Institute of Architects," "AIA," the AIA Logo, and "AIA Contract Documents" are trademarks of The American Institute of Architects. This document was produced at 18:01:06 CST on 11/09/2026 under Subscription No.20240070886 which expires on 10/15/2027, is not for resale, is licensed for one-time use only, and may only be used in accordance with the AIA Contract Documents® Terms of Service. To report copyright violations, e-mail docinfo@aiacontracts.com.
User Notes: (6af25eb25a16cb79a1e84ce5)

§ 3.1.2 The Contractor shall perform the Work in accordance with the Contract Documents.

§ 3.1.3 The Contractor shall not be relieved of its obligations to perform the Work in accordance with the Contract Documents either by activities or duties of the Architect in the Architect's administration of the Contract, or by tests, inspections or approvals required or performed by persons or entities other than the Contractor.

§ 3.2 Review of Contract Documents and Field Conditions by Contractor

§ 3.2.1 Execution of the Contract by the Contractor is a representation that the Contractor has visited the site, become generally familiar with local conditions under which the Work is to be performed, and correlated personal observations with requirements of the Contract Documents.

§ 3.2.2 Because the Contract Documents are complementary, the Contractor shall, before starting each portion of the Work, carefully study and compare the various Contract Documents relative to that portion of the Work, as well as the information furnished by the Owner pursuant to Section 2.3.4, shall take field measurements of any existing conditions related to that portion of the Work, and shall observe any conditions at the site affecting it. These obligations are for the purpose of facilitating coordination and construction by the Contractor and are not for the purpose of discovering errors, omissions, or inconsistencies in the Contract Documents; however, the Contractor shall promptly report to the Architect any errors, inconsistencies or omissions discovered by or made known to the Contractor as a request for information in such form as the Architect may require. It is recognized that the Contractor's review is made in the Contractor's capacity as a contractor and not as a licensed design professional, unless otherwise specifically provided in the Contract Documents.

§ 3.2.3 The Contractor is not required to ascertain that the Contract Documents are in accordance with applicable laws, statutes, ordinances, codes, rules and regulations, or lawful orders of public authorities, but the Contractor shall promptly report to the Architect any nonconformity discovered by or made known to the Contractor as a request for information in such form as the Architect may require.

§ 3.2.4 If the Contractor believes that additional cost or time is involved because of clarifications or instructions the Architect issues in response to the Contractor's notices or requests for information pursuant to Sections 3.2.2 or 3.2.3, the Contractor shall submit Claims as provided in Article 15. If the Contractor fails to perform the obligations of Sections 3.2.2 or 3.2.3, the Contractor shall pay such costs and damages to the Owner, subject to Section 15.1.7, as would have been avoided if the Contractor had performed such obligations. If the Contractor performs those obligations, the Contractor shall not be liable to the Owner or Architect for damages resulting from errors, inconsistencies or omissions in the Contract Documents, for differences between field measurements or conditions and the Contract Documents, or for nonconformities of the Contract Documents to applicable laws, statutes, ordinances, codes, rules and regulations, and lawful orders of public authorities.

§ 3.3 Supervision and Construction Procedures

§ 3.3.1 The Contractor shall supervise and direct the Work, using the Contractor's best skill and attention. The Contractor shall be solely responsible for, and have control over, construction means, methods, techniques, sequences, and procedures, and for coordinating all portions of the Work under the Contract. If the Contract Documents give specific instructions concerning construction means, methods, techniques, sequences, or procedures, the Contractor shall evaluate the jobsite safety thereof and shall be solely responsible for the jobsite safety of such means, methods, techniques, sequences, or procedures. If the Contractor determines that such means, methods, techniques, sequences or procedures may not be safe, the Contractor shall give timely notice to the Owner and Architect, and shall propose alternative means, methods, techniques, sequences, or procedures. The Architect shall evaluate the proposed alternative solely for conformance with the design intent for the completed construction. Unless the Architect objects to the Contractor's proposed alternative, the Contractor shall perform the Work using its alternative means, methods, techniques, sequences, or procedures.

§ 3.3.2 The Contractor shall be responsible to the Owner for acts and omissions of the Contractor's employees, Subcontractors and their agents and employees, and other persons or entities performing portions of the Work for, or on behalf of, the Contractor or any of its Subcontractors.

AIA Document A201 – 2017. Copyright © 1911, 1915, 1918, 1925, 1937, 1951, 1958, 1961, 1963, 1966, 1970, 1976, 1987, 1997, 2007 and 2017. All rights reserved. "The American Institute of Architects," "American Institute of Architects," "AIA," the AIA Logo, and "AIA Contract Documents" are trademarks of The American Institute of Architects. This document was produced at 18:01:06 CST on 11/09/2026 under Subscription No.20240070886 which expires on 10/15/2027, is not for resale, is licensed for one-time use only, and may only be used in accordance with the AIA Contract Documents® Terms of Service. To report copyright violations, e-mail docinfo@aiacontracts.com.
User Notes: (6af25eb25a16cb79a1e84ce5)

§ 3.3.3 The Contractor shall be responsible for inspection of portions of Work already performed to determine that such portions are in proper condition to receive subsequent Work.

§ 3.4 Labor and Materials

§ 3.4.1 Unless otherwise provided in the Contract Documents, the Contractor shall provide and pay for labor, materials, equipment, tools, construction equipment and machinery, water, heat, utilities, transportation, and other facilities and services necessary for proper execution and completion of the Work, whether temporary or permanent and whether or not incorporated or to be incorporated in the Work.

§ 3.4.2 Except in the case of minor changes in the Work approved by the Architect in accordance with Section 3.12.8 or ordered by the Architect in accordance with Section 7.4, the Contractor may make substitutions only with the consent of the Owner, after evaluation by the Architect and in accordance with a Change Order or Construction Change Directive.

§ 3.4.3 The Contractor shall enforce strict discipline and good order among the Contractor's employees and other persons carrying out the Work. The Contractor shall not permit employment of unfit persons or persons not properly skilled in tasks assigned to them.

§ 3.5 Warranty

§ 3.5.1 The Contractor warrants to the Owner and Architect that materials and equipment furnished under the Contract will be of good quality and new unless the Contract Documents require or permit otherwise. The Contractor further warrants that the Work will conform to the requirements of the Contract Documents and will be free from defects, except for those inherent in the quality of the Work the Contract Documents require or permit. Work, materials, or equipment not conforming to these requirements may be considered defective. The Contractor's warranty excludes remedy for damage or defect caused by abuse, alterations to the Work not executed by the Contractor, improper or insufficient maintenance, improper operation, or normal wear and tear and normal usage. If required by the Architect, the Contractor shall furnish satisfactory evidence as to the kind and quality of materials and equipment.

§ 3.5.2 All material, equipment, or other special warranties required by the Contract Documents shall be issued in the name of the Owner, or shall be transferable to the Owner, and shall commence in accordance with Section 9.8.4.

§ 3.6 Taxes

The Contractor shall pay sales, consumer, use and similar taxes for the Work provided by the Contractor that are legally enacted when bids are received or negotiations concluded, whether or not yet effective or merely scheduled to go into effect.

§ 3.7 Permits, Fees, Notices and Compliance with Laws

§ 3.7.1 Unless otherwise provided in the Contract Documents, the Contractor shall secure and pay for the building permit as well as for other permits, fees, licenses, and inspections by government agencies necessary for proper execution and completion of the Work that are customarily secured after execution of the Contract and legally required at the time bids are received or negotiations concluded.

§ 3.7.2 The Contractor shall comply with and give notices required by applicable laws, statutes, ordinances, codes, rules and regulations, and lawful orders of public authorities applicable to performance of the Work.

§ 3.7.3 If the Contractor performs Work knowing it to be contrary to applicable laws, statutes, ordinances, codes, rules and regulations, or lawful orders of public authorities, the Contractor shall assume appropriate responsibility for such Work and shall bear the costs attributable to correction.

§ 3.7.4 Concealed or Unknown Conditions

If the Contractor encounters conditions at the site that are (1) subsurface or otherwise concealed physical conditions that differ materially from those indicated in the Contract Documents or (2) unknown physical conditions of an unusual nature that differ materially from those ordinarily found to exist and generally recognized as inherent in construction activities of the character provided for in the Contract Documents, the Contractor shall promptly

AIA Document A201 – 2017. Copyright © 1911, 1915, 1918, 1925, 1937, 1951, 1958, 1961, 1963, 1966, 1970, 1976, 1987, 1997, 2007 and 2017. All rights reserved. "The American Institute of Architects," "American Institute of Architects," "AIA," the AIA Logo, and "AIA Contract Documents" are trademarks of The American Institute of Architects. This document was produced at 18:01:06 CST on 11/09/2026 under Subscription No.20240070886 which expires on 10/15/2027, is not for resale, is licensed for one-time use only, and may only be used in accordance with the AIA Contract Documents® Terms of Service. To report copyright violations, e-mail docinfo@aiacontracts.com.
User Notes: (6af25eb25a16cb79a1e84ce5)

provide notice to the Owner and the Architect before conditions are disturbed and in no event later than 14 days after first observance of the conditions. The Architect will promptly investigate such conditions and, if the Architect determines that they differ materially and cause an increase or decrease in the Contractor's cost of, or time required for, performance of any part of the Work, will recommend that an equitable adjustment be made in the Contract Sum or Contract Time, or both. If the Architect determines that the conditions at the site are not materially different from those indicated in the Contract Documents and that no change in the terms of the Contract is justified, the Architect shall promptly notify the Owner and Contractor, stating the reasons. If either party disputes the Architect's determination or recommendation, that party may submit a Claim as provided in Article 15.

§ 3.7.5 If, in the course of the Work, the Contractor encounters human remains or recognizes the existence of burial markers, archaeological sites or wetlands not indicated in the Contract Documents, the Contractor shall immediately suspend any operations that would affect them and shall notify the Owner and Architect. Upon receipt of such notice, the Owner shall promptly take any action necessary to obtain governmental authorization required to resume the operations. The Contractor shall continue to suspend such operations until otherwise instructed by the Owner but shall continue with all other operations that do not affect those remains or features. Requests for adjustments in the Contract Sum and Contract Time arising from the existence of such remains or features may be made as provided in Article 15.

§ 3.8 Allowances

§ 3.8.1 The Contractor shall include in the Contract Sum all allowances stated in the Contract Documents. Items covered by allowances shall be supplied for such amounts and by such persons or entities as the Owner may direct, but the Contractor shall not be required to employ persons or entities to whom the Contractor has reasonable objection.

§ 3.8.2 Unless otherwise provided in the Contract Documents,

- **.1** allowances shall cover the cost to the Contractor of materials and equipment delivered at the site and all required taxes, less applicable trade discounts;
- **.2** Contractor's costs for unloading and handling at the site, labor, installation costs, overhead, profit, and other expenses contemplated for stated allowance amounts shall be included in the Contract Sum but not in the allowances; and
- **.3** whenever costs are more than or less than allowances, the Contract Sum shall be adjusted accordingly by Change Order. The amount of the Change Order shall reflect (1) the difference between actual costs and the allowances under Section 3.8.2.1 and (2) changes in Contractor's costs under Section 3.8.2.2.

§ 3.8.3 Materials and equipment under an allowance shall be selected by the Owner with reasonable promptness.

§ 3.9 Superintendent

§ 3.9.1 The Contractor shall employ a competent superintendent and necessary assistants who shall be in attendance at the Project site during performance of the Work. The superintendent shall represent the Contractor, and communications given to the superintendent shall be as binding as if given to the Contractor.

§ 3.9.2 The Contractor, as soon as practicable after award of the Contract, shall notify the Owner and Architect of the name and qualifications of a proposed superintendent. Within 14 days of receipt of the information, the Architect may notify the Contractor, stating whether the Owner or the Architect (1) has reasonable objection to the proposed superintendent or (2) requires additional time for review. Failure of the Architect to provide notice within the 14-day period shall constitute notice of no reasonable objection.

§ 3.9.3 The Contractor shall not employ a proposed superintendent to whom the Owner or Architect has made reasonable and timely objection. The Contractor shall not change the superintendent without the Owner's consent, which shall not unreasonably be withheld or delayed.

§ 3.10 Contractor's Construction and Submittal Schedules

§ 3.10.1 The Contractor, promptly after being awarded the Contract, shall submit for the Owner's and Architect's information a Contractor's construction schedule for the Work. The schedule shall contain detail appropriate for the

AIA Document A201 – 2017. Copyright © 1911, 1915, 1918, 1925, 1937, 1951, 1958, 1961, 1963, 1966, 1970, 1976, 1987, 1997, 2007 and 2017. All rights reserved. "The American Institute of Architects," "American Institute of Architects," "AIA," the AIA Logo, and "AIA Contract Documents" are trademarks of The American Institute of Architects. This document was produced at 18:01:06 CST on 11/09/2026 under Subscription No.20240070886 which expires on 10/15/2027, is not for resale, is licensed for one-time use only, and may only be used in accordance with the AIA Contract Documents® Terms of Service. To report copyright violations, e-mail docinfo@aiacontracts.com.
User Notes: (6af25eb25a16cb79a1e84ce5)

Project, including (1) the date of commencement of the Work, interim schedule milestone dates, and the date of Substantial Completion; (2) an apportionment of the Work by construction activity; and (3) the time required for completion of each portion of the Work. The schedule shall provide for the orderly progression of the Work to completion and shall not exceed time limits current under the Contract Documents. The schedule shall be revised at appropriate intervals as required by the conditions of the Work and Project.

§ 3.10.2 The Contractor, promptly after being awarded the Contract and thereafter as necessary to maintain a current submittal schedule, shall submit a submittal schedule for the Architect's approval. The Architect's approval shall not be unreasonably delayed or withheld. The submittal schedule shall (1) be coordinated with the Contractor's construction schedule, and (2) allow the Architect reasonable time to review submittals. If the Contractor fails to submit a submittal schedule, or fails to provide submittals in accordance with the approved submittal schedule, the Contractor shall not be entitled to any increase in Contract Sum or extension of Contract Time based on the time required for review of submittals.

§ 3.10.3 The Contractor shall perform the Work in general accordance with the most recent schedules submitted to the Owner and Architect.

§ 3.11 Documents and Samples at the Site

The Contractor shall make available, at the Project site, the Contract Documents, including Change Orders, Construction Change Directives, and other Modifications, in good order and marked currently to indicate field changes and selections made during construction, and the approved Shop Drawings, Product Data, Samples, and similar required submittals. These shall be in electronic form or paper copy, available to the Architect and Owner, and delivered to the Architect for submittal to the Owner upon completion of the Work as a record of the Work as constructed.

§ 3.12 Shop Drawings, Product Data and Samples

§ 3.12.1 Shop Drawings are drawings, diagrams, schedules, and other data specially prepared for the Work by the Contractor or a Subcontractor, Sub-subcontractor, manufacturer, supplier, or distributor to illustrate some portion of the Work.

§ 3.12.2 Product Data are illustrations, standard schedules, performance charts, instructions, brochures, diagrams, and other information furnished by the Contractor to illustrate materials or equipment for some portion of the Work.

§ 3.12.3 Samples are physical examples that illustrate materials, equipment, or workmanship, and establish standards by which the Work will be judged.

§ 3.12.4 Shop Drawings, Product Data, Samples, and similar submittals are not Contract Documents. Their purpose is to demonstrate how the Contractor proposes to conform to the information given and the design concept expressed in the Contract Documents for those portions of the Work for which the Contract Documents require submittals. Review by the Architect is subject to the limitations of Section 4.2.7. Informational submittals upon which the Architect is not expected to take responsive action may be so identified in the Contract Documents. Submittals that are not required by the Contract Documents may be returned by the Architect without action.

§ 3.12.5 The Contractor shall review for compliance with the Contract Documents, approve, and submit to the Architect, Shop Drawings, Product Data, Samples, and similar submittals required by the Contract Documents, in accordance with the submittal schedule approved by the Architect or, in the absence of an approved submittal schedule, with reasonable promptness and in such sequence as to cause no delay in the Work or in the activities of the Owner or of Separate Contractors.

§ 3.12.6 By submitting Shop Drawings, Product Data, Samples, and similar submittals, the Contractor represents to the Owner and Architect that the Contractor has (1) reviewed and approved them, (2) determined and verified materials, field measurements and field construction criteria related thereto, or will do so, and (3) checked and coordinated the information contained within such submittals with the requirements of the Work and of the Contract Documents.

AIA Document A201 – 2017. Copyright © 1911, 1915, 1918, 1925, 1937, 1951, 1958, 1961, 1963, 1966, 1970, 1976, 1987, 1997, 2007 and 2017. All rights reserved. "The American Institute of Architects," "American Institute of Architects," "AIA," the AIA Logo, and "AIA Contract Documents" are trademarks of The American Institute of Architects. This document was produced at 18:01:06 CST on 11/09/2026 under Subscription No.20240070886 which expires on 10/15/2027, is not for resale, is licensed for one-time use only, and may only be used in accordance with the AIA Contract Documents® Terms of Service. To report copyright violations, e-mail docinfo@aiacontracts.com.
User Notes: (6af25eb25a16cb79a1e84ce5)

§ 3.12.7 The Contractor shall perform no portion of the Work for which the Contract Documents require submittal and review of Shop Drawings, Product Data, Samples, or similar submittals, until the respective submittal has been approved by the Architect.

§ 3.12.8 The Work shall be in accordance with approved submittals except that the Contractor shall not be relieved of responsibility for deviations from the requirements of the Contract Documents by the Architect's approval of Shop Drawings, Product Data, Samples, or similar submittals, unless the Contractor has specifically notified the Architect of such deviation at the time of submittal and (1) the Architect has given written approval to the specific deviation as a minor change in the Work, or (2) a Change Order or Construction Change Directive has been issued authorizing the deviation. The Contractor shall not be relieved of responsibility for errors or omissions in Shop Drawings, Product Data, Samples, or similar submittals, by the Architect's approval thereof.

§ 3.12.9 The Contractor shall direct specific attention, in writing or on resubmitted Shop Drawings, Product Data, Samples, or similar submittals, to revisions other than those requested by the Architect on previous submittals. In the absence of such notice, the Architect's approval of a resubmission shall not apply to such revisions.

§ 3.12.10 The Contractor shall not be required to provide professional services that constitute the practice of architecture or engineering unless such services are specifically required by the Contract Documents for a portion of the Work or unless the Contractor needs to provide such services in order to carry out the Contractor's responsibilities for construction means, methods, techniques, sequences, and procedures. The Contractor shall not be required to provide professional services in violation of applicable law.

§ 3.12.10.1 If professional design services or certifications by a design professional related to systems, materials, or equipment are specifically required of the Contractor by the Contract Documents, the Owner and the Architect will specify all performance and design criteria that such services must satisfy. The Contractor shall be entitled to rely upon the adequacy and accuracy of the performance and design criteria provided in the Contract Documents. The Contractor shall cause such services or certifications to be provided by an appropriately licensed design professional, whose signature and seal shall appear on all drawings, calculations, specifications, certifications, Shop Drawings, and other submittals prepared by such professional. Shop Drawings, and other submittals related to the Work, designed or certified by such professional, if prepared by others, shall bear such professional's written approval when submitted to the Architect. The Owner and the Architect shall be entitled to rely upon the adequacy and accuracy of the services, certifications, and approvals performed or provided by such design professionals, provided the Owner and Architect have specified to the Contractor the performance and design criteria that such services must satisfy. Pursuant to this Section 3.12.10, the Architect will review and approve or take other appropriate action on submittals only for the limited purpose of checking for conformance with information given and the design concept expressed in the Contract Documents.

§ 3.12.10.2 If the Contract Documents require the Contractor's design professional to certify that the Work has been performed in accordance with the design criteria, the Contractor shall furnish such certifications to the Architect at the time and in the form specified by the Architect.

§ 3.13 Use of Site

The Contractor shall confine operations at the site to areas permitted by applicable laws, statutes, ordinances, codes, rules and regulations, lawful orders of public authorities, and the Contract Documents and shall not unreasonably encumber the site with materials or equipment.

§ 3.14 Cutting and Patching

§ 3.14.1 The Contractor shall be responsible for cutting, fitting, or patching required to complete the Work or to make its parts fit together properly. All areas requiring cutting, fitting, or patching shall be restored to the condition existing prior to the cutting, fitting, or patching, unless otherwise required by the Contract Documents.

§ 3.14.2 The Contractor shall not damage or endanger a portion of the Work or fully or partially completed construction of the Owner or Separate Contractors by cutting, patching, or otherwise altering such construction, or by excavation. The Contractor shall not cut or otherwise alter construction by the Owner or a Separate Contractor except with written consent of the Owner and of the Separate Contractor. Consent shall not be unreasonably

AIA Document A201 – 2017. Copyright © 1911, 1915, 1918, 1925, 1937, 1951, 1958, 1961, 1963, 1966, 1970, 1976, 1987, 1997, 2007 and 2017. All rights reserved. "The American Institute of Architects," "American Institute of Architects," "AIA," the AIA Logo, and "AIA Contract Documents" are trademarks of The American Institute of Architects. This document was produced at 18:01:06 CST on 11/09/2026 under Subscription No.20240070886 which expires on 10/15/2027, is not for resale, is licensed for one-time use only, and may only be used in accordance with the AIA Contract Documents® Terms of Service. To report copyright violations, e-mail docinfo@aiacontracts.com.
User Notes: (6af25eb25a16cb79a1e84ce5)

withheld. The Contractor shall not unreasonably withhold, from the Owner or a Separate Contractor, its consent to cutting or otherwise altering the Work.

§ 3.15 Cleaning Up

§ 3.15.1 The Contractor shall keep the premises and surrounding area free from accumulation of waste materials and rubbish caused by operations under the Contract. At completion of the Work, the Contractor shall remove waste materials, rubbish, the Contractor's tools, construction equipment, machinery, and surplus materials from and about the Project.

§ 3.15.2 If the Contractor fails to clean up as provided in the Contract Documents, the Owner may do so and the Owner shall be entitled to reimbursement from the Contractor.

§ 3.16 Access to Work

The Contractor shall provide the Owner and Architect with access to the Work in preparation and progress wherever located.

§ 3.17 Royalties, Patents and Copyrights

The Contractor shall pay all royalties and license fees. The Contractor shall defend suits or claims for infringement of copyrights and patent rights and shall hold the Owner and Architect harmless from loss on account thereof, but shall not be responsible for defense or loss when a particular design, process, or product of a particular manufacturer or manufacturers is required by the Contract Documents, or where the copyright violations are contained in Drawings, Specifications, or other documents prepared by the Owner or Architect. However, if an infringement of a copyright or patent is discovered by, or made known to, the Contractor, the Contractor shall be responsible for the loss unless the information is promptly furnished to the Architect.

§ 3.18 Indemnification

§ 3.18.1 To the fullest extent permitted by law, the Contractor shall indemnify and hold harmless the Owner, Architect, Architect's consultants, and agents and employees of any of them from and against claims, damages, losses, and expenses, including but not limited to attorneys' fees, arising out of or resulting from performance of the Work, provided that such claim, damage, loss, or expense is attributable to bodily injury, sickness, disease or death, or to injury to or destruction of tangible property (other than the Work itself), but only to the extent caused by the negligent acts or omissions of the Contractor, a Subcontractor, anyone directly or indirectly employed by them, or anyone for whose acts they may be liable, regardless of whether or not such claim, damage, loss, or expense is caused in part by a party indemnified hereunder. Such obligation shall not be construed to negate, abridge, or reduce other rights or obligations of indemnity that would otherwise exist as to a party or person described in this Section 3.18.

§ 3.18.2 In claims against any person or entity indemnified under this Section 3.18 by an employee of the Contractor, a Subcontractor, anyone directly or indirectly employed by them, or anyone for whose acts they may be liable, the indemnification obligation under Section 3.18.1 shall not be limited by a limitation on amount or type of damages, compensation, or benefits payable by or for the Contractor or a Subcontractor under workers' compensation acts, disability benefit acts, or other employee benefit acts.

ARTICLE 4 ARCHITECT

§ 4.1 General

§ 4.1.1 The Architect is the person or entity retained by the Owner pursuant to Section 2.3.2 and identified as such in the Agreement.

§ 4.1.2 Duties, responsibilities, and limitations of authority of the Architect as set forth in the Contract Documents shall not be restricted, modified, or extended without written consent of the Owner, Contractor, and Architect. Consent shall not be unreasonably withheld.

§ 4.2 Administration of the Contract

§ 4.2.1 The Architect will provide administration of the Contract as described in the Contract Documents and will be an Owner's representative during construction until the date the Architect issues the final Certificate for Payment.

AIA Document A201 – 2017. Copyright © 1911, 1915, 1918, 1925, 1937, 1951, 1958, 1961, 1963, 1966, 1970, 1976, 1987, 1997, 2007 and 2017. All rights reserved. "The American Institute of Architects," "American Institute of Architects," "AIA," the AIA Logo, and "AIA Contract Documents" are trademarks of The American Institute of Architects. This document was produced at 18:01:06 CST on 11/09/2026 under Subscription No.20240070886 which expires on 10/15/2027, is not for resale, is licensed for one-time use only, and may only be used in accordance with the AIA Contract Documents® Terms of Service. To report copyright violations, e-mail docinfo@aiacontracts.com.
User Notes: (6af25eb25a16cb79a1e84ce5)

The Architect will have authority to act on behalf of the Owner only to the extent provided in the Contract Documents.

§ 4.2.2 The Architect will visit the site at intervals appropriate to the stage of construction, or as otherwise agreed with the Owner, to become generally familiar with the progress and quality of the portion of the Work completed, and to determine in general if the Work observed is being performed in a manner indicating that the Work, when fully completed, will be in accordance with the Contract Documents. However, the Architect will not be required to make exhaustive or continuous on-site inspections to check the quality or quantity of the Work. The Architect will not have control over, charge of, or responsibility for the construction means, methods, techniques, sequences or procedures, or for the safety precautions and programs in connection with the Work, since these are solely the Contractor's rights and responsibilities under the Contract Documents.

§ 4.2.3 On the basis of the site visits, the Architect will keep the Owner reasonably informed about the progress and quality of the portion of the Work completed, and promptly report to the Owner (1) known deviations from the Contract Documents, (2) known deviations from the most recent construction schedule submitted by the Contractor, and (3) defects and deficiencies observed in the Work. The Architect will not be responsible for the Contractor's failure to perform the Work in accordance with the requirements of the Contract Documents. The Architect will not have control over or charge of, and will not be responsible for acts or omissions of, the Contractor, Subcontractors, or their agents or employees, or any other persons or entities performing portions of the Work.

§ 4.2.4 Communications

The Owner and Contractor shall include the Architect in all communications that relate to or affect the Architect's services or professional responsibilities. The Owner shall promptly notify the Architect of the substance of any direct communications between the Owner and the Contractor otherwise relating to the Project. Communications by and with the Architect's consultants shall be through the Architect. Communications by and with Subcontractors and suppliers shall be through the Contractor. Communications by and with Separate Contractors shall be through the Owner. The Contract Documents may specify other communication protocols.

§ 4.2.5 Based on the Architect's evaluations of the Contractor's Applications for Payment, the Architect will review and certify the amounts due the Contractor and will issue Certificates for Payment in such amounts.

§ 4.2.6 The Architect has authority to reject Work that does not conform to the Contract Documents. Whenever the Architect considers it necessary or advisable, the Architect will have authority to require inspection or testing of the Work in accordance with Sections 13.4.2 and 13.4.3, whether or not the Work is fabricated, installed or completed. However, neither this authority of the Architect nor a decision made in good faith either to exercise or not to exercise such authority shall give rise to a duty or responsibility of the Architect to the Contractor, Subcontractors, suppliers, their agents or employees, or other persons or entities performing portions of the Work.

§ 4.2.7 The Architect will review and approve, or take other appropriate action upon, the Contractor's submittals such as Shop Drawings, Product Data, and Samples, but only for the limited purpose of checking for conformance with information given and the design concept expressed in the Contract Documents. The Architect's action will be taken in accordance with the submittal schedule approved by the Architect or, in the absence of an approved submittal schedule, with reasonable promptness while allowing sufficient time in the Architect's professional judgment to permit adequate review. Review of such submittals is not conducted for the purpose of determining the accuracy and completeness of other details such as dimensions and quantities, or for substantiating instructions for installation or performance of equipment or systems, all of which remain the responsibility of the Contractor as required by the Contract Documents. The Architect's review of the Contractor's submittals shall not relieve the Contractor of the obligations under Sections 3.3, 3.5, and 3.12. The Architect's review shall not constitute approval of safety precautions or of any construction means, methods, techniques, sequences, or procedures. The Architect's approval of a specific item shall not indicate approval of an assembly of which the item is a component.

§ 4.2.8 The Architect will prepare Change Orders and Construction Change Directives, and may order minor changes in the Work as provided in Section 7.4. The Architect will investigate and make determinations and recommendations regarding concealed and unknown conditions as provided in Section 3.7.4.

AIA Document A201 – 2017. Copyright © 1911, 1915, 1918, 1925, 1937, 1951, 1958, 1961, 1963, 1966, 1970, 1976, 1987, 1997, 2007 and 2017. All rights reserved. "The American Institute of Architects," "American Institute of Architects," "AIA," the AIA Logo, and "AIA Contract Documents" are trademarks of The American Institute of Architects. This document was produced at 18:01:06 CST on 11/09/2026 under Subscription No.20240070886 which expires on 10/15/2027, is not for resale, is licensed for one-time use only, and may only be used in accordance with the AIA Contract Documents® Terms of Service. To report copyright violations, e-mail docinfo@aiacontracts.com.
User Notes: (6af25eb25a16cb79a1e84ce5)

§ 4.2.9 The Architect will conduct inspections to determine the date or dates of Substantial Completion and the date of final completion; issue Certificates of Substantial Completion pursuant to Section 9.8; receive and forward to the Owner, for the Owner's review and records, written warranties and related documents required by the Contract and assembled by the Contractor pursuant to Section 9.10; and issue a final Certificate for Payment pursuant to Section 9.10.

§ 4.2.10 If the Owner and Architect agree, the Architect will provide one or more Project representatives to assist in carrying out the Architect's responsibilities at the site. The Owner shall notify the Contractor of any change in the duties, responsibilities and limitations of authority of the Project representatives.

§ 4.2.11 The Architect will interpret and decide matters concerning performance under, and requirements of, the Contract Documents on written request of either the Owner or Contractor. The Architect's response to such requests will be made in writing within any time limits agreed upon or otherwise with reasonable promptness.

§ 4.2.12 Interpretations and decisions of the Architect will be consistent with the intent of, and reasonably inferable from, the Contract Documents and will be in writing or in the form of drawings. When making such interpretations and decisions, the Architect will endeavor to secure faithful performance by both Owner and Contractor, will not show partiality to either, and will not be liable for results of interpretations or decisions rendered in good faith.

§ 4.2.13 The Architect's decisions on matters relating to aesthetic effect will be final if consistent with the intent expressed in the Contract Documents.

§ 4.2.14 The Architect will review and respond to requests for information about the Contract Documents. The Architect's response to such requests will be made in writing within any time limits agreed upon or otherwise with reasonable promptness. If appropriate, the Architect will prepare and issue supplemental Drawings and Specifications in response to the requests for information.

ARTICLE 5 SUBCONTRACTORS

§ 5.1 Definitions

§ 5.1.1 A Subcontractor is a person or entity who has a direct contract with the Contractor to perform a portion of the Work at the site. The term "Subcontractor" is referred to throughout the Contract Documents as if singular in number and means a Subcontractor or an authorized representative of the Subcontractor. The term "Subcontractor" does not include a Separate Contractor or the subcontractors of a Separate Contractor.

§ 5.1.2 A Sub-subcontractor is a person or entity who has a direct or indirect contract with a Subcontractor to perform a portion of the Work at the site. The term "Sub-subcontractor" is referred to throughout the Contract Documents as if singular in number and means a Sub-subcontractor or an authorized representative of the Sub-subcontractor.

§ 5.2 Award of Subcontracts and Other Contracts for Portions of the Work

§ 5.2.1 Unless otherwise stated in the Contract Documents, the Contractor, as soon as practicable after award of the Contract, shall notify the Owner and Architect of the persons or entities proposed for each principal portion of the Work, including those who are to furnish materials or equipment fabricated to a special design. Within 14 days of receipt of the information, the Architect may notify the Contractor whether the Owner or the Architect (1) has reasonable objection to any such proposed person or entity or (2) requires additional time for review. Failure of the Architect to provide notice within the 14-day period shall constitute notice of no reasonable objection.

§ 5.2.2 The Contractor shall not contract with a proposed person or entity to whom the Owner or Architect has made reasonable and timely objection. The Contractor shall not be required to contract with anyone to whom the Contractor has made reasonable objection.

§ 5.2.3 If the Owner or Architect has reasonable objection to a person or entity proposed by the Contractor, the Contractor shall propose another to whom the Owner or Architect has no reasonable objection. If the proposed but rejected Subcontractor was reasonably capable of performing the Work, the Contract Sum and Contract Time shall be increased or decreased by the difference, if any, occasioned by such change, and an appropriate Change Order

AIA Document A201 – 2017. Copyright © 1911, 1915, 1918, 1925, 1937, 1951, 1958, 1961, 1963, 1966, 1970, 1976, 1987, 1997, 2007 and 2017. All rights reserved. "The American Institute of Architects," "American Institute of Architects," "AIA," the AIA Logo, and "AIA Contract Documents" are trademarks of The American Institute of Architects. This document was produced at 18:01:06 CST on 11/09/2026 under Subscription No.20240070886 which expires on 10/15/2027, is not for resale, is licensed for one-time use only, and may only be used in accordance with the AIA Contract Documents® Terms of Service. To report copyright violations, e-mail docinfo@aiacontracts.com.
User Notes: (6af25eb25a16cb79a1e84ce5)

shall be issued before commencement of the substitute Subcontractor's Work. However, no increase in the Contract Sum or Contract Time shall be allowed for such change unless the Contractor has acted promptly and responsively in submitting names as required.

§ 5.2.4 The Contractor shall not substitute a Subcontractor, person, or entity for one previously selected if the Owner or Architect makes reasonable objection to such substitution.

§ 5.3 Subcontractual Relations

By appropriate written agreement, the Contractor shall require each Subcontractor, to the extent of the Work to be performed by the Subcontractor, to be bound to the Contractor by terms of the Contract Documents, and to assume toward the Contractor all the obligations and responsibilities, including the responsibility for safety of the Subcontractor's Work that the Contractor, by these Contract Documents, assumes toward the Owner and Architect. Each subcontract agreement shall preserve and protect the rights of the Owner and Architect under the Contract Documents with respect to the Work to be performed by the Subcontractor so that subcontracting thereof will not prejudice such rights, and shall allow to the Subcontractor, unless specifically provided otherwise in the subcontract agreement, the benefit of all rights, remedies, and redress against the Contractor that the Contractor, by the Contract Documents, has against the Owner. Where appropriate, the Contractor shall require each Subcontractor to enter into similar agreements with Sub-subcontractors. The Contractor shall make available to each proposed Subcontractor, prior to the execution of the subcontract agreement, copies of the Contract Documents to which the Subcontractor will be bound, and, upon written request of the Subcontractor, identify to the Subcontractor terms and conditions of the proposed subcontract agreement that may be at variance with the Contract Documents. Subcontractors will similarly make copies of applicable portions of such documents available to their respective proposed Sub-subcontractors.

§ 5.4 Contingent Assignment of Subcontracts

§ 5.4.1 Each subcontract agreement for a portion of the Work is assigned by the Contractor to the Owner, provided that

.1 assignment is effective only after termination of the Contract by the Owner for cause pursuant to Section 14.2 and only for those subcontract agreements that the Owner accepts by notifying the Subcontractor and Contractor; and

.2 assignment is subject to the prior rights of the surety, if any, obligated under bond relating to the Contract.

When the Owner accepts the assignment of a subcontract agreement, the Owner assumes the Contractor's rights and obligations under the subcontract.

§ 5.4.2 Upon such assignment, if the Work has been suspended for more than 30 days, the Subcontractor's compensation shall be equitably adjusted for increases in cost resulting from the suspension.

§ 5.4.3 Upon assignment to the Owner under this Section 5.4, the Owner may further assign the subcontract to a successor contractor or other entity. If the Owner assigns the subcontract to a successor contractor or other entity, the Owner shall nevertheless remain legally responsible for all of the successor contractor's obligations under the subcontract.

ARTICLE 6 CONSTRUCTION BY OWNER OR BY SEPARATE CONTRACTORS

§ 6.1 Owner's Right to Perform Construction and to Award Separate Contracts

§ 6.1.1 The term "Separate Contractor(s)" shall mean other contractors retained by the Owner under separate agreements. The Owner reserves the right to perform construction or operations related to the Project with the Owner's own forces, and with Separate Contractors retained under Conditions of the Contract substantially similar to those of this Contract, including those provisions of the Conditions of the Contract related to insurance and waiver of subrogation.

§ 6.1.2 When separate contracts are awarded for different portions of the Project or other construction or operations on the site, the term "Contractor" in the Contract Documents in each case shall mean the Contractor who executes each separate Owner-Contractor Agreement.

AIA Document A201 – 2017. Copyright © 1911, 1915, 1918, 1925, 1937, 1951, 1958, 1961, 1963, 1966, 1970, 1976, 1987, 1997, 2007 and 2017. All rights reserved. "The American Institute of Architects," "American Institute of Architects," "AIA," the AIA Logo, and "AIA Contract Documents" are trademarks of The American Institute of Architects. This document was produced at 18:01:06 CST on 11/09/2026 under Subscription No.20240070886 which expires on 10/15/2027, is not for resale, is licensed for one-time use only, and may only be used in accordance with the AIA Contract Documents® Terms of Service. To report copyright violations, e-mail docinfo@aiacontracts.com.
User Notes: (6af25eb25a16cb79a1e84ce5)

§ 6.1.3 The Owner shall provide for coordination of the activities of the Owner's own forces and of each Separate Contractor with the Work of the Contractor, who shall cooperate with them. The Contractor shall participate with any Separate Contractors and the Owner in reviewing their construction schedules. The Contractor shall make any revisions to its construction schedule deemed necessary after a joint review and mutual agreement. The construction schedules shall then constitute the schedules to be used by the Contractor, Separate Contractors, and the Owner until subsequently revised.

§ 6.1.4 Unless otherwise provided in the Contract Documents, when the Owner performs construction or operations related to the Project with the Owner's own forces or with Separate Contractors, the Owner or its Separate Contractors shall have the same obligations and rights that the Contractor has under the Conditions of the Contract, including, without excluding others, those stated in Article 3, this Article 6, and Articles 10, 11, and 12.

§ 6.2 Mutual Responsibility

§ 6.2.1 The Contractor shall afford the Owner and Separate Contractors reasonable opportunity for introduction and storage of their materials and equipment and performance of their activities, and shall connect and coordinate the Contractor's construction and operations with theirs as required by the Contract Documents.

§ 6.2.2 If part of the Contractor's Work depends for proper execution or results upon construction or operations by the Owner or a Separate Contractor, the Contractor shall, prior to proceeding with that portion of the Work, promptly notify the Architect of apparent discrepancies or defects in the construction or operations by the Owner or Separate Contractor that would render it unsuitable for proper execution and results of the Contractor's Work. Failure of the Contractor to notify the Architect of apparent discrepancies or defects prior to proceeding with the Work shall constitute an acknowledgment that the Owner's or Separate Contractor's completed or partially completed construction is fit and proper to receive the Contractor's Work. The Contractor shall not be responsible for discrepancies or defects in the construction or operations by the Owner or Separate Contractor that are not apparent.

§ 6.2.3 The Contractor shall reimburse the Owner for costs the Owner incurs that are payable to a Separate Contractor because of the Contractor's delays, improperly timed activities or defective construction. The Owner shall be responsible to the Contractor for costs the Contractor incurs because of a Separate Contractor's delays, improperly timed activities, damage to the Work or defective construction.

§ 6.2.4 The Contractor shall promptly remedy damage that the Contractor wrongfully causes to completed or partially completed construction or to property of the Owner or Separate Contractor as provided in Section 10.2.5.

§ 6.2.5 The Owner and each Separate Contractor shall have the same responsibilities for cutting and patching as are described for the Contractor in Section 3.14.

§ 6.3 Owner's Right to Clean Up

If a dispute arises among the Contractor, Separate Contractors, and the Owner as to the responsibility under their respective contracts for maintaining the premises and surrounding area free from waste materials and rubbish, the Owner may clean up and the Architect will allocate the cost among those responsible.

ARTICLE 7 CHANGES IN THE WORK

§ 7.1 General

§ 7.1.1 Changes in the Work may be accomplished after execution of the Contract, and without invalidating the Contract, by Change Order, Construction Change Directive or order for a minor change in the Work, subject to the limitations stated in this Article 7 and elsewhere in the Contract Documents.

§ 7.1.2 A Change Order shall be based upon agreement among the Owner, Contractor, and Architect. A Construction Change Directive requires agreement by the Owner and Architect and may or may not be agreed to by the Contractor. An order for a minor change in the Work may be issued by the Architect alone.

AIA Document A201 – 2017. Copyright © 1911, 1915, 1918, 1925, 1937, 1951, 1958, 1961, 1963, 1966, 1970, 1976, 1987, 1997, 2007 and 2017. All rights reserved. "The American Institute of Architects," "American Institute of Architects," "AIA," the AIA Logo, and "AIA Contract Documents" are trademarks of The American Institute of Architects. This document was produced at 18:01:06 CST on 11/09/2026 under Subscription No.20240070886 which expires on 10/15/2027, is not for resale, is licensed for one-time use only, and may only be used in accordance with the AIA Contract Documents® Terms of Service. To report copyright violations, e-mail docinfo@aiacontracts.com.
User Notes: (6af25eb25a16cb79a1e84ce5)

§ 7.1.3 Changes in the Work shall be performed under applicable provisions of the Contract Documents. The Contractor shall proceed promptly with changes in the Work, unless otherwise provided in the Change Order, Construction Change Directive, or order for a minor change in the Work.

§ 7.2 Change Orders

§ 7.2.1 A Change Order is a written instrument prepared by the Architect and signed by the Owner, Contractor, and Architect stating their agreement upon all of the following:

- **.1** The change in the Work;
- **.2** The amount of the adjustment, if any, in the Contract Sum; and
- **.3** The extent of the adjustment, if any, in the Contract Time.

§ 7.3 Construction Change Directives

§ 7.3.1 A Construction Change Directive is a written order prepared by the Architect and signed by the Owner and Architect, directing a change in the Work prior to agreement on adjustment, if any, in the Contract Sum or Contract Time, or both. The Owner may by Construction Change Directive, without invalidating the Contract, order changes in the Work within the general scope of the Contract consisting of additions, deletions, or other revisions, the Contract Sum and Contract Time being adjusted accordingly.

§ 7.3.2 A Construction Change Directive shall be used in the absence of total agreement on the terms of a Change Order.

§ 7.3.3 If the Construction Change Directive provides for an adjustment to the Contract Sum, the adjustment shall be based on one of the following methods:

- **.1** Mutual acceptance of a lump sum properly itemized and supported by sufficient substantiating data to permit evaluation;
- **.2** Unit prices stated in the Contract Documents or subsequently agreed upon;
- **.3** Cost to be determined in a manner agreed upon by the parties and a mutually acceptable fixed or percentage fee; or
- **.4** As provided in Section 7.3.4.

§ 7.3.4 If the Contractor does not respond promptly or disagrees with the method for adjustment in the Contract Sum, the Architect shall determine the adjustment on the basis of reasonable expenditures and savings of those performing the Work attributable to the change, including, in case of an increase in the Contract Sum, an amount for overhead and profit as set forth in the Agreement, or if no such amount is set forth in the Agreement, a reasonable amount. In such case, and also under Section 7.3.3.3, the Contractor shall keep and present, in such form as the Architect may prescribe, an itemized accounting together with appropriate supporting data. Unless otherwise provided in the Contract Documents, costs for the purposes of this Section 7.3.4 shall be limited to the following:

- **.1** Costs of labor, including applicable payroll taxes, fringe benefits required by agreement or custom, workers' compensation insurance, and other employee costs approved by the Architect;
- **.2** Costs of materials, supplies, and equipment, including cost of transportation, whether incorporated or consumed;
- **.3** Rental costs of machinery and equipment, exclusive of hand tools, whether rented from the Contractor or others;
- **.4** Costs of premiums for all bonds and insurance, permit fees, and sales, use, or similar taxes, directly related to the change; and
- **.5** Costs of supervision and field office personnel directly attributable to the change.

§ 7.3.5 If the Contractor disagrees with the adjustment in the Contract Time, the Contractor may make a Claim in accordance with applicable provisions of Article 15.

§ 7.3.6 Upon receipt of a Construction Change Directive, the Contractor shall promptly proceed with the change in the Work involved and advise the Architect of the Contractor's agreement or disagreement with the method, if any, provided in the Construction Change Directive for determining the proposed adjustment in the Contract Sum or Contract Time.

AIA Document A201 – 2017. Copyright © 1911, 1915, 1918, 1925, 1937, 1951, 1958, 1961, 1963, 1966, 1970, 1976, 1987, 1997, 2007 and 2017. All rights reserved. "The American Institute of Architects," "American Institute of Architects," "AIA," the AIA Logo, and "AIA Contract Documents" are trademarks of The American Institute of Architects. This document was produced at 18:01:06 CST on 11/09/2026 under Subscription No.20240070886 which expires on 10/15/2027, is not for resale, is licensed for one-time use only, and may only be used in accordance with the AIA Contract Documents® Terms of Service. To report copyright violations, e-mail docinfo@aiacontracts.com.
User Notes: (6af25eb25a16cb79a1e84ce5)

§ 7.3.7 A Construction Change Directive signed by the Contractor indicates the Contractor's agreement therewith, including adjustment in Contract Sum and Contract Time or the method for determining them. Such agreement shall be effective immediately and shall be recorded as a Change Order.

§ 7.3.8 The amount of credit to be allowed by the Contractor to the Owner for a deletion or change that results in a net decrease in the Contract Sum shall be actual net cost as confirmed by the Architect. When both additions and credits covering related Work or substitutions are involved in a change, the allowance for overhead and profit shall be figured on the basis of net increase, if any, with respect to that change.

§ 7.3.9 Pending final determination of the total cost of a Construction Change Directive to the Owner, the Contractor may request payment for Work completed under the Construction Change Directive in Applications for Payment. The Architect will make an interim determination for purposes of monthly certification for payment for those costs and certify for payment the amount that the Architect determines, in the Architect's professional judgment, to be reasonably justified. The Architect's interim determination of cost shall adjust the Contract Sum on the same basis as a Change Order, subject to the right of either party to disagree and assert a Claim in accordance with Article 15.

§ 7.3.10 When the Owner and Contractor agree with a determination made by the Architect concerning the adjustments in the Contract Sum and Contract Time, or otherwise reach agreement upon the adjustments, such agreement shall be effective immediately and the Architect will prepare a Change Order. Change Orders may be issued for all or any part of a Construction Change Directive.

§ 7.4 Minor Changes in the Work

The Architect may order minor changes in the Work that are consistent with the intent of the Contract Documents and do not involve an adjustment in the Contract Sum or an extension of the Contract Time. The Architect's order for minor changes shall be in writing. If the Contractor believes that the proposed minor change in the Work will affect the Contract Sum or Contract Time, the Contractor shall notify the Architect and shall not proceed to implement the change in the Work. If the Contractor performs the Work set forth in the Architect's order for a minor change without prior notice to the Architect that such change will affect the Contract Sum or Contract Time, the Contractor waives any adjustment to the Contract Sum or extension of the Contract Time.

ARTICLE 8 TIME

§ 8.1 Definitions

§ 8.1.1 Unless otherwise provided, Contract Time is the period of time, including authorized adjustments, allotted in the Contract Documents for Substantial Completion of the Work.

§ 8.1.2 The date of commencement of the Work is the date established in the Agreement.

§ 8.1.3 The date of Substantial Completion is the date certified by the Architect in accordance with Section 9.8.

§ 8.1.4 The term "day" as used in the Contract Documents shall mean calendar day unless otherwise specifically defined.

§ 8.2 Progress and Completion

§ 8.2.1 Time limits stated in the Contract Documents are of the essence of the Contract. By executing the Agreement, the Contractor confirms that the Contract Time is a reasonable period for performing the Work.

§ 8.2.2 The Contractor shall not knowingly, except by agreement or instruction of the Owner in writing, commence the Work prior to the effective date of insurance required to be furnished by the Contractor and Owner.

§ 8.2.3 The Contractor shall proceed expeditiously with adequate forces and shall achieve Substantial Completion within the Contract Time.

§ 8.3 Delays and Extensions of Time

§ 8.3.1 If the Contractor is delayed at any time in the commencement or progress of the Work by (1) an act or neglect of the Owner or Architect, of an employee of either, or of a Separate Contractor; (2) by changes ordered in the

AIA Document A201 – 2017. Copyright © 1911, 1915, 1918, 1925, 1937, 1951, 1958, 1961, 1963, 1966, 1970, 1976, 1987, 1997, 2007 and 2017. All rights reserved. "The American Institute of Architects," "American Institute of Architects," "AIA," the AIA Logo, and "AIA Contract Documents" are trademarks of The American Institute of Architects. This document was produced at 18:01:06 CST on 11/09/2026 under Subscription No.20240070886 which expires on 10/15/2027, is not for resale, is licensed for one-time use only, and may only be used in accordance with the AIA Contract Documents® Terms of Service. To report copyright violations, e-mail docinfo@aiacontracts.com.
User Notes: (6af25eb25a16cb79a1e84ce5)

Work; (3) by labor disputes, fire, unusual delay in deliveries, unavoidable casualties, adverse weather conditions documented in accordance with Section 15.1.6.2, or other causes beyond the Contractor's control; (4) by delay authorized by the Owner pending mediation and binding dispute resolution; or (5) by other causes that the Contractor asserts, and the Architect determines, justify delay, then the Contract Time shall be extended for such reasonable time as the Architect may determine.

§ 8.3.2 Claims relating to time shall be made in accordance with applicable provisions of Article 15.

§ 8.3.3 This Section 8.3 does not preclude recovery of damages for delay by either party under other provisions of the Contract Documents.

ARTICLE 9 PAYMENTS AND COMPLETION

§ 9.1 Contract Sum

§ 9.1.1 The Contract Sum is stated in the Agreement and, including authorized adjustments, is the total amount payable by the Owner to the Contractor for performance of the Work under the Contract Documents.

§ 9.1.2 If unit prices are stated in the Contract Documents or subsequently agreed upon, and if quantities originally contemplated are materially changed so that application of such unit prices to the actual quantities causes substantial inequity to the Owner or Contractor, the applicable unit prices shall be equitably adjusted.

§ 9.2 Schedule of Values

Where the Contract is based on a stipulated sum or Guaranteed Maximum Price, the Contractor shall submit a schedule of values to the Architect before the first Application for Payment, allocating the entire Contract Sum to the various portions of the Work. The schedule of values shall be prepared in the form, and supported by the data to substantiate its accuracy, required by the Architect. This schedule, unless objected to by the Architect, shall be used as a basis for reviewing the Contractor's Applications for Payment. Any changes to the schedule of values shall be submitted to the Architect and supported by such data to substantiate its accuracy as the Architect may require, and unless objected to by the Architect, shall be used as a basis for reviewing the Contractor's subsequent Applications for Payment.

§ 9.3 Applications for Payment

§ 9.3.1 At least ten days before the date established for each progress payment, the Contractor shall submit to the Architect an itemized Application for Payment prepared in accordance with the schedule of values, if required under Section 9.2, for completed portions of the Work. The application shall be notarized, if required, and supported by all data substantiating the Contractor's right to payment that the Owner or Architect require, such as copies of requisitions, and releases and waivers of liens from Subcontractors and suppliers, and shall reflect retainage if provided for in the Contract Documents.

§ 9.3.1.1 As provided in Section 7.3.9, such applications may include requests for payment on account of changes in the Work that have been properly authorized by Construction Change Directives, or by interim determinations of the Architect, but not yet included in Change Orders.

§ 9.3.1.2 Applications for Payment shall not include requests for payment for portions of the Work for which the Contractor does not intend to pay a Subcontractor or supplier, unless such Work has been performed by others whom the Contractor intends to pay.

§ 9.3.2 Unless otherwise provided in the Contract Documents, payments shall be made on account of materials and equipment delivered and suitably stored at the site for subsequent incorporation in the Work. If approved in advance by the Owner, payment may similarly be made for materials and equipment suitably stored off the site at a location agreed upon in writing. Payment for materials and equipment stored on or off the site shall be conditioned upon compliance by the Contractor with procedures satisfactory to the Owner to establish the Owner's title to such materials and equipment or otherwise protect the Owner's interest, and shall include the costs of applicable insurance, storage, and transportation to the site, for such materials and equipment stored off the site.

AIA Document A201 – 2017. Copyright © 1911, 1915, 1918, 1925, 1937, 1951, 1958, 1961, 1963, 1966, 1970, 1976, 1987, 1997, 2007 and 2017. All rights reserved. "The American Institute of Architects," "American Institute of Architects," "AIA," the AIA Logo, and "AIA Contract Documents" are trademarks of The American Institute of Architects. This document was produced at 18:01:06 CST on 11/09/2026 under Subscription No.20240070886 which expires on 10/15/2027, is not for resale, is licensed for one-time use only, and may only be used in accordance with the AIA Contract Documents® Terms of Service. To report copyright violations, e-mail docinfo@aiacontracts.com.
User Notes: (6af25eb25a16cb79a1e84ce5)

§ 9.3.3 The Contractor warrants that title to all Work covered by an Application for Payment will pass to the Owner no later than the time of payment. The Contractor further warrants that upon submittal of an Application for Payment all Work for which Certificates for Payment have been previously issued and payments received from the Owner shall, to the best of the Contractor's knowledge, information, and belief, be free and clear of liens, claims, security interests, or encumbrances, in favor of the Contractor, Subcontractors, suppliers, or other persons or entities that provided labor, materials, and equipment relating to the Work.

§ 9.4 Certificates for Payment

§ 9.4.1 The Architect will, within seven days after receipt of the Contractor's Application for Payment, either (1) issue to the Owner a Certificate for Payment in the full amount of the Application for Payment, with a copy to the Contractor; or (2) issue to the Owner a Certificate for Payment for such amount as the Architect determines is properly due, and notify the Contractor and Owner of the Architect's reasons for withholding certification in part as provided in Section 9.5.1; or (3) withhold certification of the entire Application for Payment, and notify the Contractor and Owner of the Architect's reason for withholding certification in whole as provided in Section 9.5.1.

§ 9.4.2 The issuance of a Certificate for Payment will constitute a representation by the Architect to the Owner, based on the Architect's evaluation of the Work and the data in the Application for Payment, that, to the best of the Architect's knowledge, information, and belief, the Work has progressed to the point indicated, the quality of the Work is in accordance with the Contract Documents, and that the Contractor is entitled to payment in the amount certified. The foregoing representations are subject to an evaluation of the Work for conformance with the Contract Documents upon Substantial Completion, to results of subsequent tests and inspections, to correction of minor deviations from the Contract Documents prior to completion, and to specific qualifications expressed by the Architect. However, the issuance of a Certificate for Payment will not be a representation that the Architect has (1) made exhaustive or continuous on-site inspections to check the quality or quantity of the Work; (2) reviewed construction means, methods, techniques, sequences, or procedures; (3) reviewed copies of requisitions received from Subcontractors and suppliers and other data requested by the Owner to substantiate the Contractor's right to payment; or (4) made examination to ascertain how or for what purpose the Contractor has used money previously paid on account of the Contract Sum.

§ 9.5 Decisions to Withhold Certification

§ 9.5.1 The Architect may withhold a Certificate for Payment in whole or in part, to the extent reasonably necessary to protect the Owner, if in the Architect's opinion the representations to the Owner required by Section 9.4.2 cannot be made. If the Architect is unable to certify payment in the amount of the Application, the Architect will notify the Contractor and Owner as provided in Section 9.4.1. If the Contractor and Architect cannot agree on a revised amount, the Architect will promptly issue a Certificate for Payment for the amount for which the Architect is able to make such representations to the Owner. The Architect may also withhold a Certificate for Payment or, because of subsequently discovered evidence, may nullify the whole or a part of a Certificate for Payment previously issued, to such extent as may be necessary in the Architect's opinion to protect the Owner from loss for which the Contractor is responsible, including loss resulting from acts and omissions described in Section 3.3.2, because of

- .1 defective Work not remedied;
- .2 third party claims filed or reasonable evidence indicating probable filing of such claims, unless security acceptable to the Owner is provided by the Contractor;
- .3 failure of the Contractor to make payments properly to Subcontractors or suppliers for labor, materials or equipment;
- .4 reasonable evidence that the Work cannot be completed for the unpaid balance of the Contract Sum;
- .5 damage to the Owner or a Separate Contractor;
- .6 reasonable evidence that the Work will not be completed within the Contract Time, and that the unpaid balance would not be adequate to cover actual or liquidated damages for the anticipated delay; or
- .7 repeated failure to carry out the Work in accordance with the Contract Documents.

§ 9.5.2 When either party disputes the Architect's decision regarding a Certificate for Payment under Section 9.5.1, in whole or in part, that party may submit a Claim in accordance with Article 15.

AIA Document A201 – 2017. Copyright © 1911, 1915, 1918, 1925, 1937, 1951, 1958, 1961, 1963, 1966, 1970, 1976, 1987, 1997, 2007 and 2017. All rights reserved. "The American Institute of Architects," "American Institute of Architects," "AIA," the AIA Logo, and "AIA Contract Documents" are trademarks of The American Institute of Architects. This document was produced at 18:01:06 CST on 11/09/2026 under Subscription No.20240070886 which expires on 10/15/2027, is not for resale, is licensed for one-time use only, and may only be used in accordance with the AIA Contract Documents® Terms of Service. To report copyright violations, e-mail docinfo@aiacontracts.com.
User Notes: (6af25eb25a16cb79a1e84ce5)

§ 9.5.3 When the reasons for withholding certification are removed, certification will be made for amounts previously withheld.

§ 9.5.4 If the Architect withholds certification for payment under Section 9.5.1.3, the Owner may, at its sole option, issue joint checks to the Contractor and to any Subcontractor or supplier to whom the Contractor failed to make payment for Work properly performed or material or equipment suitably delivered. If the Owner makes payments by joint check, the Owner shall notify the Architect and the Contractor shall reflect such payment on its next Application for Payment.

§ 9.6 Progress Payments

§ 9.6.1 After the Architect has issued a Certificate for Payment, the Owner shall make payment in the manner and within the time provided in the Contract Documents, and shall so notify the Architect.

§ 9.6.2 The Contractor shall pay each Subcontractor, no later than seven days after receipt of payment from the Owner, the amount to which the Subcontractor is entitled, reflecting percentages actually retained from payments to the Contractor on account of the Subcontractor's portion of the Work. The Contractor shall, by appropriate agreement with each Subcontractor, require each Subcontractor to make payments to Sub-subcontractors in a similar manner.

§ 9.6.3 The Architect will, on request, furnish to a Subcontractor, if practicable, information regarding percentages of completion or amounts applied for by the Contractor and action taken thereon by the Architect and Owner on account of portions of the Work done by such Subcontractor.

§ 9.6.4 The Owner has the right to request written evidence from the Contractor that the Contractor has properly paid Subcontractors and suppliers amounts paid by the Owner to the Contractor for subcontracted Work. If the Contractor fails to furnish such evidence within seven days, the Owner shall have the right to contact Subcontractors and suppliers to ascertain whether they have been properly paid. Neither the Owner nor Architect shall have an obligation to pay, or to see to the payment of money to, a Subcontractor or supplier, except as may otherwise be required by law.

§ 9.6.5 The Contractor's payments to suppliers shall be treated in a manner similar to that provided in Sections 9.6.2, 9.6.3 and 9.6.4.

§ 9.6.6 A Certificate for Payment, a progress payment, or partial or entire use or occupancy of the Project by the Owner shall not constitute acceptance of Work not in accordance with the Contract Documents.

§ 9.6.7 Unless the Contractor provides the Owner with a payment bond in the full penal sum of the Contract Sum, payments received by the Contractor for Work properly performed by Subcontractors or provided by suppliers shall be held by the Contractor for those Subcontractors or suppliers who performed Work or furnished materials, or both, under contract with the Contractor for which payment was made by the Owner. Nothing contained herein shall require money to be placed in a separate account and not commingled with money of the Contractor, create any fiduciary liability or tort liability on the part of the Contractor for breach of trust, or entitle any person or entity to an award of punitive damages against the Contractor for breach of the requirements of this provision.

§ 9.6.8 Provided the Owner has fulfilled its payment obligations under the Contract Documents, the Contractor shall defend and indemnify the Owner from all loss, liability, damage or expense, including reasonable attorney's fees and litigation expenses, arising out of any lien claim or other claim for payment by any Subcontractor or supplier of any tier. Upon receipt of notice of a lien claim or other claim for payment, the Owner shall notify the Contractor. If approved by the applicable court, when required, the Contractor may substitute a surety bond for the property against which the lien or other claim for payment has been asserted.

§ 9.7 Failure of Payment

If the Architect does not issue a Certificate for Payment, through no fault of the Contractor, within seven days after receipt of the Contractor's Application for Payment, or if the Owner does not pay the Contractor within seven days after the date established in the Contract Documents, the amount certified by the Architect or awarded by binding

AIA Document A201 – 2017. Copyright © 1911, 1915, 1918, 1925, 1937, 1951, 1958, 1961, 1963, 1966, 1970, 1976, 1987, 1997, 2007 and 2017. All rights reserved. "The American Institute of Architects," "American Institute of Architects," "AIA," the AIA Logo, and "AIA Contract Documents" are trademarks of The American Institute of Architects. This document was produced at 18:01:06 CST on 11/09/2026 under Subscription No.20240070886 which expires on 10/15/2027, is not for resale, is licensed for one-time use only, and may only be used in accordance with the AIA Contract Documents® Terms of Service. To report copyright violations, e-mail docinfo@aiacontracts.com.
User Notes: (6af25eb25a16cb79a1e84ce5)

dispute resolution, then the Contractor may, upon seven additional days' notice to the Owner and Architect, stop the Work until payment of the amount owing has been received. The Contract Time shall be extended appropriately and the Contract Sum shall be increased by the amount of the Contractor's reasonable costs of shutdown, delay and start-up, plus interest as provided for in the Contract Documents.

§ 9.8 Substantial Completion

§ 9.8.1 Substantial Completion is the stage in the progress of the Work when the Work or designated portion thereof is sufficiently complete in accordance with the Contract Documents so that the Owner can occupy or utilize the Work for its intended use.

§ 9.8.2 When the Contractor considers that the Work, or a portion thereof which the Owner agrees to accept separately, is substantially complete, the Contractor shall prepare and submit to the Architect a comprehensive list of items to be completed or corrected prior to final payment. Failure to include an item on such list does not alter the responsibility of the Contractor to complete all Work in accordance with the Contract Documents.

§ 9.8.3 Upon receipt of the Contractor's list, the Architect will make an inspection to determine whether the Work or designated portion thereof is substantially complete. If the Architect's inspection discloses any item, whether or not included on the Contractor's list, which is not sufficiently complete in accordance with the Contract Documents so that the Owner can occupy or utilize the Work or designated portion thereof for its intended use, the Contractor shall, before issuance of the Certificate of Substantial Completion, complete or correct such item upon notification by the Architect. In such case, the Contractor shall then submit a request for another inspection by the Architect to determine Substantial Completion.

§ 9.8.4 When the Work or designated portion thereof is substantially complete, the Architect will prepare a Certificate of Substantial Completion that shall establish the date of Substantial Completion; establish responsibilities of the Owner and Contractor for security, maintenance, heat, utilities, damage to the Work and insurance; and fix the time within which the Contractor shall finish all items on the list accompanying the Certificate. Warranties required by the Contract Documents shall commence on the date of Substantial Completion of the Work or designated portion thereof unless otherwise provided in the Certificate of Substantial Completion.

§ 9.8.5 The Certificate of Substantial Completion shall be submitted to the Owner and Contractor for their written acceptance of responsibilities assigned to them in the Certificate. Upon such acceptance, and consent of surety if any, the Owner shall make payment of retainage applying to the Work or designated portion thereof. Such payment shall be adjusted for Work that is incomplete or not in accordance with the requirements of the Contract Documents.

§ 9.9 Partial Occupancy or Use

§ 9.9.1 The Owner may occupy or use any completed or partially completed portion of the Work at any stage when such portion is designated by separate agreement with the Contractor, provided such occupancy or use is consented to by the insurer and authorized by public authorities having jurisdiction over the Project. Such partial occupancy or use may commence whether or not the portion is substantially complete, provided the Owner and Contractor have accepted in writing the responsibilities assigned to each of them for payments, retainage, if any, security, maintenance, heat, utilities, damage to the Work and insurance, and have agreed in writing concerning the period for correction of the Work and commencement of warranties required by the Contract Documents. When the Contractor considers a portion substantially complete, the Contractor shall prepare and submit a list to the Architect as provided under Section 9.8.2. Consent of the Contractor to partial occupancy or use shall not be unreasonably withheld. The stage of the progress of the Work shall be determined by written agreement between the Owner and Contractor or, if no agreement is reached, by decision of the Architect.

§ 9.9.2 Immediately prior to such partial occupancy or use, the Owner, Contractor, and Architect shall jointly inspect the area to be occupied or portion of the Work to be used in order to determine and record the condition of the Work.

§ 9.9.3 Unless otherwise agreed upon, partial occupancy or use of a portion or portions of the Work shall not constitute acceptance of Work not complying with the requirements of the Contract Documents.

AIA Document A201 – 2017. Copyright © 1911, 1915, 1918, 1925, 1937, 1951, 1958, 1961, 1963, 1966, 1970, 1976, 1987, 1997, 2007 and 2017. All rights reserved. "The American Institute of Architects," "American Institute of Architects," "AIA," the AIA Logo, and "AIA Contract Documents" are trademarks of The American Institute of Architects. This document was produced at 18:01:06 CST on 11/09/2026 under Subscription No.20240070886 which expires on 10/15/2027, is not for resale, is licensed for one-time use only, and may only be used in accordance with the AIA Contract Documents® Terms of Service. To report copyright violations, e-mail docinfo@aiacontracts.com.
User Notes: (6af25eb25a16cb79a1e84ce5)

§ 9.10 Final Completion and Final Payment

§ 9.10.1 Upon receipt of the Contractor's notice that the Work is ready for final inspection and acceptance and upon receipt of a final Application for Payment, the Architect will promptly make such inspection. When the Architect finds the Work acceptable under the Contract Documents and the Contract fully performed, the Architect will promptly issue a final Certificate for Payment stating that to the best of the Architect's knowledge, information and belief, and on the basis of the Architect's on-site visits and inspections, the Work has been completed in accordance with the Contract Documents and that the entire balance found to be due the Contractor and noted in the final Certificate is due and payable. The Architect's final Certificate for Payment will constitute a further representation that conditions listed in Section 9.10.2 as precedent to the Contractor's being entitled to final payment have been fulfilled.

§ 9.10.2 Neither final payment nor any remaining retained percentage shall become due until the Contractor submits to the Architect (1) an affidavit that payrolls, bills for materials and equipment, and other indebtedness connected with the Work for which the Owner or the Owner's property might be responsible or encumbered (less amounts withheld by Owner) have been paid or otherwise satisfied, (2) a certificate evidencing that insurance required by the Contract Documents to remain in force after final payment is currently in effect, (3) a written statement that the Contractor knows of no reason that the insurance will not be renewable to cover the period required by the Contract Documents, (4) consent of surety, if any, to final payment, (5) documentation of any special warranties, such as manufacturers' warranties or specific Subcontractor warranties, and (6) if required by the Owner, other data establishing payment or satisfaction of obligations, such as receipts and releases and waivers of liens, claims, security interests, or encumbrances arising out of the Contract, to the extent and in such form as may be designated by the Owner. If a Subcontractor refuses to furnish a release or waiver required by the Owner, the Contractor may furnish a bond satisfactory to the Owner to indemnify the Owner against such lien, claim, security interest, or encumbrance. If a lien, claim, security interest, or encumbrance remains unsatisfied after payments are made, the Contractor shall refund to the Owner all money that the Owner may be compelled to pay in discharging the lien, claim, security interest, or encumbrance, including all costs and reasonable attorneys' fees.

§ 9.10.3 If, after Substantial Completion of the Work, final completion thereof is materially delayed through no fault of the Contractor or by issuance of Change Orders affecting final completion, and the Architect so confirms, the Owner shall, upon application by the Contractor and certification by the Architect, and without terminating the Contract, make payment of the balance due for that portion of the Work fully completed, corrected, and accepted. If the remaining balance for Work not fully completed or corrected is less than retainage stipulated in the Contract Documents, and if bonds have been furnished, the written consent of the surety to payment of the balance due for that portion of the Work fully completed and accepted shall be submitted by the Contractor to the Architect prior to certification of such payment. Such payment shall be made under terms and conditions governing final payment, except that it shall not constitute a waiver of Claims.

§ 9.10.4 The making of final payment shall constitute a waiver of Claims by the Owner except those arising from

- **.1** liens, Claims, security interests, or encumbrances arising out of the Contract and unsettled;
- **.2** failure of the Work to comply with the requirements of the Contract Documents;
- **.3** terms of special warranties required by the Contract Documents; or
- **.4** audits performed by the Owner, if permitted by the Contract Documents, after final payment.

§ 9.10.5 Acceptance of final payment by the Contractor, a Subcontractor, or a supplier, shall constitute a waiver of claims by that payee except those previously made in writing and identified by that payee as unsettled at the time of final Application for Payment.

ARTICLE 10 PROTECTION OF PERSONS AND PROPERTY

§ 10.1 Safety Precautions and Programs

The Contractor shall be responsible for initiating, maintaining, and supervising all safety precautions and programs in connection with the performance of the Contract.

§ 10.2 Safety of Persons and Property

§ 10.2.1 The Contractor shall take reasonable precautions for safety of, and shall provide reasonable protection to prevent damage, injury, or loss to

AIA Document A201 – 2017. Copyright © 1911, 1915, 1918, 1925, 1937, 1951, 1958, 1961, 1963, 1966, 1970, 1976, 1987, 1997, 2007 and 2017. All rights reserved. "The American Institute of Architects," "American Institute of Architects," "AIA," the AIA Logo, and "AIA Contract Documents" are trademarks of The American Institute of Architects. This document was produced at 18:01:06 CST on 11/09/2026 under Subscription No.20240070886 which expires on 10/15/2027, is not for resale, is licensed for one-time use only, and may only be used in accordance with the AIA Contract Documents® Terms of Service. To report copyright violations, e-mail docinfo@aiacontracts.com.
User Notes: (6af25eb25a16cb79a1e84ce5)

.1 employees on the Work and other persons who may be affected thereby;

.2 the Work and materials and equipment to be incorporated therein, whether in storage on or off the site, under care, custody, or control of the Contractor, a Subcontractor, or a Sub-subcontractor; and

.3 other property at the site or adjacent thereto, such as trees, shrubs, lawns, walks, pavements, roadways, structures, and utilities not designated for removal, relocation, or replacement in the course of construction.

§ 10.2.2 The Contractor shall comply with, and give notices required by applicable laws, statutes, ordinances, codes, rules and regulations, and lawful orders of public authorities, bearing on safety of persons or property or their protection from damage, injury, or loss.

§ 10.2.3 The Contractor shall implement, erect, and maintain, as required by existing conditions and performance of the Contract, reasonable safeguards for safety and protection, including posting danger signs and other warnings against hazards; promulgating safety regulations; and notifying the owners and users of adjacent sites and utilities of the safeguards.

§ 10.2.4 When use or storage of explosives or other hazardous materials or equipment, or unusual methods are necessary for execution of the Work, the Contractor shall exercise utmost care and carry on such activities under supervision of properly qualified personnel.

§ 10.2.5 The Contractor shall promptly remedy damage and loss (other than damage or loss insured under property insurance required by the Contract Documents) to property referred to in Sections 10.2.1.2 and 10.2.1.3 caused in whole or in part by the Contractor, a Subcontractor, a Sub-subcontractor, or anyone directly or indirectly employed by any of them, or by anyone for whose acts they may be liable and for which the Contractor is responsible under Sections 10.2.1.2 and 10.2.1.3. The Contractor may make a Claim for the cost to remedy the damage or loss to the extent such damage or loss is attributable to acts or omissions of the Owner or Architect or anyone directly or indirectly employed by either of them, or by anyone for whose acts either of them may be liable, and not attributable to the fault or negligence of the Contractor. The foregoing obligations of the Contractor are in addition to the Contractor's obligations under Section 3.18.

§ 10.2.6 The Contractor shall designate a responsible member of the Contractor's organization at the site whose duty shall be the prevention of accidents. This person shall be the Contractor's superintendent unless otherwise designated by the Contractor in writing to the Owner and Architect.

§ 10.2.7 The Contractor shall not permit any part of the construction or site to be loaded so as to cause damage or create an unsafe condition.

§ 10.2.8 Injury or Damage to Person or Property

If either party suffers injury or damage to person or property because of an act or omission of the other party, or of others for whose acts such party is legally responsible, notice of the injury or damage, whether or not insured, shall be given to the other party within a reasonable time not exceeding 21 days after discovery. The notice shall provide sufficient detail to enable the other party to investigate the matter.

§ 10.3 Hazardous Materials and Substances

§ 10.3.1 The Contractor is responsible for compliance with any requirements included in the Contract Documents regarding hazardous materials or substances. If the Contractor encounters a hazardous material or substance not addressed in the Contract Documents and if reasonable precautions will be inadequate to prevent foreseeable bodily injury or death to persons resulting from a material or substance, including but not limited to asbestos or polychlorinated biphenyl (PCB), encountered on the site by the Contractor, the Contractor shall, upon recognizing the condition, immediately stop Work in the affected area and notify the Owner and Architect of the condition.

§ 10.3.2 Upon receipt of the Contractor's notice, the Owner shall obtain the services of a licensed laboratory to verify the presence or absence of the material or substance reported by the Contractor and, in the event such material or substance is found to be present, to cause it to be rendered harmless. Unless otherwise required by the Contract Documents, the Owner shall furnish in writing to the Contractor and Architect the names and qualifications of

AIA Document A201 – 2017. Copyright © 1911, 1915, 1918, 1925, 1937, 1951, 1958, 1961, 1963, 1966, 1970, 1976, 1987, 1997, 2007 and 2017. All rights reserved. "The American Institute of Architects," "American Institute of Architects," "AIA," the AIA Logo, and "AIA Contract Documents" are trademarks of The American Institute of Architects. This document was produced at 18:01:06 CST on 11/09/2026 under Subscription No.20240070886 which expires on 10/15/2027, is not for resale, is licensed for one-time use only, and may only be used in accordance with the AIA Contract Documents® Terms of Service. To report copyright violations, e-mail docinfo@aiacontracts.com.
User Notes: (6af25eb25a16cb79a1e84ce5)

persons or entities who are to perform tests verifying the presence or absence of the material or substance or who are to perform the task of removal or safe containment of the material or substance. The Contractor and the Architect will promptly reply to the Owner in writing stating whether or not either has reasonable objection to the persons or entities proposed by the Owner. If either the Contractor or Architect has an objection to a person or entity proposed by the Owner, the Owner shall propose another to whom the Contractor and the Architect have no reasonable objection. When the material or substance has been rendered harmless, Work in the affected area shall resume upon written agreement of the Owner and Contractor. By Change Order, the Contract Time shall be extended appropriately and the Contract Sum shall be increased by the amount of the Contractor's reasonable additional costs of shutdown, delay, and start-up.

§ 10.3.3 To the fullest extent permitted by law, the Owner shall indemnify and hold harmless the Contractor, Subcontractors, Architect, Architect's consultants, and agents and employees of any of them from and against claims, damages, losses, and expenses, including but not limited to attorneys' fees, arising out of or resulting from performance of the Work in the affected area if in fact the material or substance presents the risk of bodily injury or death as described in Section 10.3.1 and has not been rendered harmless, provided that such claim, damage, loss, or expense is attributable to bodily injury, sickness, disease or death, or to injury to or destruction of tangible property (other than the Work itself), except to the extent that such damage, loss, or expense is due to the fault or negligence of the party seeking indemnity.

§ 10.3.4 The Owner shall not be responsible under this Section 10.3 for hazardous materials or substances the Contractor brings to the site unless such materials or substances are required by the Contract Documents. The Owner shall be responsible for hazardous materials or substances required by the Contract Documents, except to the extent of the Contractor's fault or negligence in the use and handling of such materials or substances.

§ 10.3.5 The Contractor shall reimburse the Owner for the cost and expense the Owner incurs (1) for remediation of hazardous materials or substances the Contractor brings to the site and negligently handles, or (2) where the Contractor fails to perform its obligations under Section 10.3.1, except to the extent that the cost and expense are due to the Owner's fault or negligence.

§ 10.3.6 If, without negligence on the part of the Contractor, the Contractor is held liable by a government agency for the cost of remediation of a hazardous material or substance solely by reason of performing Work as required by the Contract Documents, the Owner shall reimburse the Contractor for all cost and expense thereby incurred.

§ 10.4 Emergencies

In an emergency affecting safety of persons or property, the Contractor shall act, at the Contractor's discretion, to prevent threatened damage, injury, or loss. Additional compensation or extension of time claimed by the Contractor on account of an emergency shall be determined as provided in Article 15 and Article 7.

ARTICLE 11 INSURANCE AND BONDS

§ 11.1 Contractor's Insurance and Bonds

§ 11.1.1 The Contractor shall purchase and maintain insurance of the types and limits of liability, containing the endorsements, and subject to the terms and conditions, as described in the Agreement or elsewhere in the Contract Documents. The Contractor shall purchase and maintain the required insurance from an insurance company or insurance companies lawfully authorized to issue insurance in the jurisdiction where the Project is located. The Owner, Architect, and Architect's consultants shall be named as additional insureds under the Contractor's commercial general liability policy or as otherwise described in the Contract Documents.

§ 11.1.2 The Contractor shall provide surety bonds of the types, for such penal sums, and subject to such terms and conditions as required by the Contract Documents. The Contractor shall purchase and maintain the required bonds from a company or companies lawfully authorized to issue surety bonds in the jurisdiction where the Project is located.

§ 11.1.3 Upon the request of any person or entity appearing to be a potential beneficiary of bonds covering payment of obligations arising under the Contract, the Contractor shall promptly furnish a copy of the bonds or shall authorize a copy to be furnished.

AIA Document A201 – 2017. Copyright © 1911, 1915, 1918, 1925, 1937, 1951, 1958, 1961, 1963, 1966, 1970, 1976, 1987, 1997, 2007 and 2017. All rights reserved. "The American Institute of Architects," "American Institute of Architects," "AIA," the AIA Logo, and "AIA Contract Documents" are trademarks of The American Institute of Architects. This document was produced at 18:01:06 CST on 11/09/2026 under Subscription No.20240070886 which expires on 10/15/2027, is not for resale, is licensed for one-time use only, and may only be used in accordance with the AIA Contract Documents® Terms of Service. To report copyright violations, e-mail docinfo@aiacontracts.com.
User Notes: (6af25eb25a16cb79a1e84ce5)

§ 11.1.4 Notice of Cancellation or Expiration of Contractor's Required Insurance. Within three (3) business days of the date the Contractor becomes aware of an impending or actual cancellation or expiration of any insurance required by the Contract Documents, the Contractor shall provide notice to the Owner of such impending or actual cancellation or expiration. Upon receipt of notice from the Contractor, the Owner shall, unless the lapse in coverage arises from an act or omission of the Owner, have the right to stop the Work until the lapse in coverage has been cured by the procurement of replacement coverage by the Contractor. The furnishing of notice by the Contractor shall not relieve the Contractor of any contractual obligation to provide any required coverage.

§ 11.2 Owner's Insurance

§ 11.2.1 The Owner shall purchase and maintain insurance of the types and limits of liability, containing the endorsements, and subject to the terms and conditions, as described in the Agreement or elsewhere in the Contract Documents. The Owner shall purchase and maintain the required insurance from an insurance company or insurance companies lawfully authorized to issue insurance in the jurisdiction where the Project is located.

§ 11.2.2 Failure to Purchase Required Property Insurance. If the Owner fails to purchase and maintain the required property insurance, with all of the coverages and in the amounts described in the Agreement or elsewhere in the Contract Documents, the Owner shall inform the Contractor in writing prior to commencement of the Work. Upon receipt of notice from the Owner, the Contractor may delay commencement of the Work and may obtain insurance that will protect the interests of the Contractor, Subcontractors, and Sub-Subcontractors in the Work. When the failure to provide coverage has been cured or resolved, the Contract Sum and Contract Time shall be equitably adjusted. In the event the Owner fails to procure coverage, the Owner waives all rights against the Contractor, Subcontractors, and Sub-subcontractors to the extent the loss to the Owner would have been covered by the insurance to have been procured by the Owner. The cost of the insurance shall be charged to the Owner by a Change Order. If the Owner does not provide written notice, and the Contractor is damaged by the failure or neglect of the Owner to purchase or maintain the required insurance, the Owner shall reimburse the Contractor for all reasonable costs and damages attributable thereto.

§ 11.2.3 Notice of Cancellation or Expiration of Owner's Required Property Insurance. Within three (3) business days of the date the Owner becomes aware of an impending or actual cancellation or expiration of any property insurance required by the Contract Documents, the Owner shall provide notice to the Contractor of such impending or actual cancellation or expiration. Unless the lapse in coverage arises from an act or omission of the Contractor: (1) the Contractor, upon receipt of notice from the Owner, shall have the right to stop the Work until the lapse in coverage has been cured by the procurement of replacement coverage by either the Owner or the Contractor; (2) the Contract Time and Contract Sum shall be equitably adjusted; and (3) the Owner waives all rights against the Contractor, Subcontractors, and Sub-subcontractors to the extent any loss to the Owner would have been covered by the insurance had it not expired or been cancelled. If the Contractor purchases replacement coverage, the cost of the insurance shall be charged to the Owner by an appropriate Change Order. The furnishing of notice by the Owner shall not relieve the Owner of any contractual obligation to provide required insurance.

§ 11.3 Waivers of Subrogation

§ 11.3.1 The Owner and Contractor waive all rights against (1) each other and any of their subcontractors, sub-subcontractors, agents, and employees, each of the other; (2) the Architect and Architect's consultants; and (3) Separate Contractors, if any, and any of their subcontractors, sub-subcontractors, agents, and employees, for damages caused by fire, or other causes of loss, to the extent those losses are covered by property insurance required by the Agreement or other property insurance applicable to the Project, except such rights as they have to proceeds of such insurance. The Owner or Contractor, as appropriate, shall require similar written waivers in favor of the individuals and entities identified above from the Architect, Architect's consultants, Separate Contractors, subcontractors, and sub-subcontractors. The policies of insurance purchased and maintained by each person or entity agreeing to waive claims pursuant to this section 11.3.1 shall not prohibit this waiver of subrogation. This waiver of subrogation shall be effective as to a person or entity (1) even though that person or entity would otherwise have a duty of indemnification, contractual or otherwise, (2) even though that person or entity did not pay the insurance premium directly or indirectly, or (3) whether or not the person or entity had an insurable interest in the damaged property.

AIA Document A201 – 2017. Copyright © 1911, 1915, 1918, 1925, 1937, 1951, 1958, 1961, 1963, 1966, 1970, 1976, 1987, 1997, 2007 and 2017. All rights reserved. "The American Institute of Architects," "American Institute of Architects," "AIA," the AIA Logo, and "AIA Contract Documents" are trademarks of The American Institute of Architects. This document was produced at 18:01:06 CST on 11/09/2026 under Subscription No.20240070886 which expires on 10/15/2027, is not for resale, is licensed for one-time use only, and may only be used in accordance with the AIA Contract Documents® Terms of Service. To report copyright violations, e-mail docinfo@aiacontracts.com.
User Notes: (6af25eb25a16cb79a1e84ce5)

§ 11.3.2 If during the Project construction period the Owner insures properties, real or personal or both, at or adjacent to the site by property insurance under policies separate from those insuring the Project, or if after final payment property insurance is to be provided on the completed Project through a policy or policies other than those insuring the Project during the construction period, to the extent permissible by such policies, the Owner waives all rights in accordance with the terms of Section 11.3.1 for damages caused by fire or other causes of loss covered by this separate property insurance.

§ 11.4 Loss of Use, Business Interruption, and Delay in Completion Insurance

The Owner, at the Owner's option, may purchase and maintain insurance that will protect the Owner against loss of use of the Owner's property, or the inability to conduct normal operations, due to fire or other causes of loss. The Owner waives all rights of action against the Contractor and Architect for loss of use of the Owner's property, due to fire or other hazards however caused.

§11.5 Adjustment and Settlement of Insured Loss

§ 11.5.1 A loss insured under the property insurance required by the Agreement shall be adjusted by the Owner as fiduciary and made payable to the Owner as fiduciary for the insureds, as their interests may appear, subject to requirements of any applicable mortgagee clause and of Section 11.5.2. The Owner shall pay the Architect and Contractor their just shares of insurance proceeds received by the Owner, and by appropriate agreements the Architect and Contractor shall make payments to their consultants and Subcontractors in similar manner.

§ 11.5.2 Prior to settlement of an insured loss, the Owner shall notify the Contractor of the terms of the proposed settlement as well as the proposed allocation of the insurance proceeds. The Contractor shall have 14 days from receipt of notice to object to the proposed settlement or allocation of the proceeds. If the Contractor does not object, the Owner shall settle the loss and the Contractor shall be bound by the settlement and allocation. Upon receipt, the Owner shall deposit the insurance proceeds in a separate account and make the appropriate distributions. Thereafter, if no other agreement is made or the Owner does not terminate the Contract for convenience, the Owner and Contractor shall execute a Change Order for reconstruction of the damaged or destroyed Work in the amount allocated for that purpose. If the Contractor timely objects to either the terms of the proposed settlement or the allocation of the proceeds, the Owner may proceed to settle the insured loss, and any dispute between the Owner and Contractor arising out of the settlement or allocation of the proceeds shall be resolved pursuant to Article 15. Pending resolution of any dispute, the Owner may issue a Construction Change Directive for the reconstruction of the damaged or destroyed Work.

ARTICLE 12 UNCOVERING AND CORRECTION OF WORK

§ 12.1 Uncovering of Work

§ 12.1.1 If a portion of the Work is covered contrary to the Architect's request or to requirements specifically expressed in the Contract Documents, it must, if requested in writing by the Architect, be uncovered for the Architect's examination and be replaced at the Contractor's expense without change in the Contract Time.

§ 12.1.2 If a portion of the Work has been covered that the Architect has not specifically requested to examine prior to its being covered, the Architect may request to see such Work and it shall be uncovered by the Contractor. If such Work is in accordance with the Contract Documents, the Contractor shall be entitled to an equitable adjustment to the Contract Sum and Contract Time as may be appropriate. If such Work is not in accordance with the Contract Documents, the costs of uncovering the Work, and the cost of correction, shall be at the Contractor's expense.

§ 12.2 Correction of Work

§ 12.2.1 Before Substantial Completion

The Contractor shall promptly correct Work rejected by the Architect or failing to conform to the requirements of the Contract Documents, discovered before Substantial Completion and whether or not fabricated, installed or completed. Costs of correcting such rejected Work, including additional testing and inspections, the cost of uncovering and replacement, and compensation for the Architect's services and expenses made necessary thereby, shall be at the Contractor's expense.

AIA Document A201 – 2017. Copyright © 1911, 1915, 1918, 1925, 1937, 1951, 1958, 1961, 1963, 1966, 1970, 1976, 1987, 1997, 2007 and 2017. All rights reserved. "The American Institute of Architects," "American Institute of Architects," "AIA," the AIA Logo, and "AIA Contract Documents" are trademarks of The American Institute of Architects. This document was produced at 18:01:06 CST on 11/09/2026 under Subscription No.20240070886 which expires on 10/15/2027, is not for resale, is licensed for one-time use only, and may only be used in accordance with the AIA Contract Documents® Terms of Service. To report copyright violations, e-mail docinfo@aiacontracts.com.
User Notes: (6af25eb25a16cb79a1e84ce5)

§ 12.2.2 After Substantial Completion

§ 12.2.2.1 In addition to the Contractor's obligations under Section 3.5, if, within one year after the date of Substantial Completion of the Work or designated portion thereof or after the date for commencement of warranties established under Section 9.9.1, or by terms of any applicable special warranty required by the Contract Documents, any of the Work is found to be not in accordance with the requirements of the Contract Documents, the Contractor shall correct it promptly after receipt of notice from the Owner to do so, unless the Owner has previously given the Contractor a written acceptance of such condition. The Owner shall give such notice promptly after discovery of the condition. During the one-year period for correction of Work, if the Owner fails to notify the Contractor and give the Contractor an opportunity to make the correction, the Owner waives the rights to require correction by the Contractor and to make a claim for breach of warranty. If the Contractor fails to correct nonconforming Work within a reasonable time during that period after receipt of notice from the Owner or Architect, the Owner may correct it in accordance with Section 2.5.

§ 12.2.2.2 The one-year period for correction of Work shall be extended with respect to portions of Work first performed after Substantial Completion by the period of time between Substantial Completion and the actual completion of that portion of the Work.

§ 12.2.2.3 The one-year period for correction of Work shall not be extended by corrective Work performed by the Contractor pursuant to this Section 12.2.

§ 12.2.3 The Contractor shall remove from the site portions of the Work that are not in accordance with the requirements of the Contract Documents and are neither corrected by the Contractor nor accepted by the Owner.

§ 12.2.4 The Contractor shall bear the cost of correcting destroyed or damaged construction of the Owner or Separate Contractors, whether completed or partially completed, caused by the Contractor's correction or removal of Work that is not in accordance with the requirements of the Contract Documents.

§ 12.2.5 Nothing contained in this Section 12.2 shall be construed to establish a period of limitation with respect to other obligations the Contractor has under the Contract Documents. Establishment of the one-year period for correction of Work as described in Section 12.2.2 relates only to the specific obligation of the Contractor to correct the Work, and has no relationship to the time within which the obligation to comply with the Contract Documents may be sought to be enforced, nor to the time within which proceedings may be commenced to establish the Contractor's liability with respect to the Contractor's obligations other than specifically to correct the Work.

§ 12.3 Acceptance of Nonconforming Work

If the Owner prefers to accept Work that is not in accordance with the requirements of the Contract Documents, the Owner may do so instead of requiring its removal and correction, in which case the Contract Sum will be reduced as appropriate and equitable. Such adjustment shall be effected whether or not final payment has been made.

ARTICLE 13 MISCELLANEOUS PROVISIONS

§ 13.1 Governing Law

The Contract shall be governed by the law of the place where the Project is located, excluding that jurisdiction's choice of law rules. If the parties have selected arbitration as the method of binding dispute resolution, the Federal Arbitration Act shall govern Section 15.4.

§ 13.2 Successors and Assigns

§ 13.2.1 The Owner and Contractor respectively bind themselves, their partners, successors, assigns, and legal representatives to covenants, agreements, and obligations contained in the Contract Documents. Except as provided in Section 13.2.2, neither party to the Contract shall assign the Contract as a whole without written consent of the other. If either party attempts to make an assignment without such consent, that party shall nevertheless remain legally responsible for all obligations under the Contract.

§ 13.2.2 The Owner may, without consent of the Contractor, assign the Contract to a lender providing construction financing for the Project, if the lender assumes the Owner's rights and obligations under the Contract Documents. The Contractor shall execute all consents reasonably required to facilitate the assignment.

AIA Document A201 – 2017. Copyright © 1911, 1915, 1918, 1925, 1937, 1951, 1958, 1961, 1963, 1966, 1970, 1976, 1987, 1997, 2007 and 2017. All rights reserved. "The American Institute of Architects," "American Institute of Architects," "AIA," the AIA Logo, and "AIA Contract Documents" are trademarks of The American Institute of Architects. This document was produced at 18:01:06 CST on 11/09/2026 under Subscription No.20240070886 which expires on 10/15/2027, is not for resale, is licensed for one-time use only, and may only be used in accordance with the AIA Contract Documents® Terms of Service. To report copyright violations, e-mail docinfo@aiacontracts.com.
User Notes: (6af25eb25a16cb79a1e84ce5)

§ 13.3 Rights and Remedies

§ 13.3.1 Duties and obligations imposed by the Contract Documents and rights and remedies available thereunder shall be in addition to and not a limitation of duties, obligations, rights, and remedies otherwise imposed or available by law.

§ 13.3.2 No action or failure to act by the Owner, Architect, or Contractor shall constitute a waiver of a right or duty afforded them under the Contract, nor shall such action or failure to act constitute approval of or acquiescence in a breach thereunder, except as may be specifically agreed upon in writing.

§ 13.4 Tests and Inspections

§ 13.4.1 Tests, inspections, and approvals of portions of the Work shall be made as required by the Contract Documents and by applicable laws, statutes, ordinances, codes, rules, and regulations or lawful orders of public authorities. Unless otherwise provided, the Contractor shall make arrangements for such tests, inspections, and approvals with an independent testing laboratory or entity acceptable to the Owner, or with the appropriate public authority, and shall bear all related costs of tests, inspections, and approvals. The Contractor shall give the Architect timely notice of when and where tests and inspections are to be made so that the Architect may be present for such procedures. The Owner shall bear costs of tests, inspections, or approvals that do not become requirements until after bids are received or negotiations concluded. The Owner shall directly arrange and pay for tests, inspections, or approvals where building codes or applicable laws or regulations so require.

§ 13.4.2 If the Architect, Owner, or public authorities having jurisdiction determine that portions of the Work require additional testing, inspection, or approval not included under Section 13.4.1, the Architect will, upon written authorization from the Owner, instruct the Contractor to make arrangements for such additional testing, inspection, or approval, by an entity acceptable to the Owner, and the Contractor shall give timely notice to the Architect of when and where tests and inspections are to be made so that the Architect may be present for such procedures. Such costs, except as provided in Section 13.4.3, shall be at the Owner's expense.

§ 13.4.3 If procedures for testing, inspection, or approval under Sections 13.4.1 and 13.4.2 reveal failure of the portions of the Work to comply with requirements established by the Contract Documents, all costs made necessary by such failure, including those of repeated procedures and compensation for the Architect's services and expenses, shall be at the Contractor's expense.

§ 13.4.4 Required certificates of testing, inspection, or approval shall, unless otherwise required by the Contract Documents, be secured by the Contractor and promptly delivered to the Architect.

§ 13.4.5 If the Architect is to observe tests, inspections, or approvals required by the Contract Documents, the Architect will do so promptly and, where practicable, at the normal place of testing.

§ 13.4.6 Tests or inspections conducted pursuant to the Contract Documents shall be made promptly to avoid unreasonable delay in the Work.

§ 13.5 Interest

Payments due and unpaid under the Contract Documents shall bear interest from the date payment is due at the rate the parties agree upon in writing or, in the absence thereof, at the legal rate prevailing from time to time at the place where the Project is located.

ARTICLE 14 TERMINATION OR SUSPENSION OF THE CONTRACT

§ 14.1 Termination by the Contractor

§ 14.1.1 The Contractor may terminate the Contract if the Work is stopped for a period of 30 consecutive days through no act or fault of the Contractor, a Subcontractor, a Sub-subcontractor, their agents or employees, or any other persons or entities performing portions of the Work, for any of the following reasons:

.1 Issuance of an order of a court or other public authority having jurisdiction that requires all Work to be stopped;

AIA Document A201 – 2017. Copyright © 1911, 1915, 1918, 1925, 1937, 1951, 1958, 1961, 1963, 1966, 1970, 1976, 1987, 1997, 2007 and 2017. All rights reserved. "The American Institute of Architects," "American Institute of Architects," "AIA," the AIA Logo, and "AIA Contract Documents" are trademarks of The American Institute of Architects. This document was produced at 18:01:06 CST on 11/09/2026 under Subscription No.20240070886 which expires on 10/15/2027, is not for resale, is licensed for one-time use only, and may only be used in accordance with the AIA Contract Documents® Terms of Service. To report copyright violations, e-mail docinfo@aiacontracts.com.
User Notes: (6af25eb25a16cb79a1e84ce5)

.2 An act of government, such as a declaration of national emergency, that requires all Work to be stopped;

.3 Because the Architect has not issued a Certificate for Payment and has not notified the Contractor of the reason for withholding certification as provided in Section 9.4.1, or because the Owner has not made payment on a Certificate for Payment within the time stated in the Contract Documents; or

.4 The Owner has failed to furnish to the Contractor reasonable evidence as required by Section 2.2.

§ 14.1.2 The Contractor may terminate the Contract if, through no act or fault of the Contractor, a Subcontractor, a Sub-subcontractor, their agents or employees, or any other persons or entities performing portions of the Work, repeated suspensions, delays, or interruptions of the entire Work by the Owner as described in Section 14.3, constitute in the aggregate more than 100 percent of the total number of days scheduled for completion, or 120 days in any 365-day period, whichever is less.

§ 14.1.3 If one of the reasons described in Section 14.1.1 or 14.1.2 exists, the Contractor may, upon seven days' notice to the Owner and Architect, terminate the Contract and recover from the Owner payment for Work executed, as well as reasonable overhead and profit on Work not executed, and costs incurred by reason of such termination.

§ 14.1.4 If the Work is stopped for a period of 60 consecutive days through no act or fault of the Contractor, a Subcontractor, a Sub-subcontractor, or their agents or employees or any other persons or entities performing portions of the Work because the Owner has repeatedly failed to fulfill the Owner's obligations under the Contract Documents with respect to matters important to the progress of the Work, the Contractor may, upon seven additional days' notice to the Owner and the Architect, terminate the Contract and recover from the Owner as provided in Section 14.1.3.

§ 14.2 Termination by the Owner for Cause

§ 14.2.1 The Owner may terminate the Contract if the Contractor

.1 repeatedly refuses or fails to supply enough properly skilled workers or proper materials;

.2 fails to make payment to Subcontractors or suppliers in accordance with the respective agreements between the Contractor and the Subcontractors or suppliers;

.3 repeatedly disregards applicable laws, statutes, ordinances, codes, rules and regulations, or lawful orders of a public authority; or

.4 otherwise is guilty of substantial breach of a provision of the Contract Documents.

§ 14.2.2 When any of the reasons described in Section 14.2.1 exist, and upon certification by the Architect that sufficient cause exists to justify such action, the Owner may, without prejudice to any other rights or remedies of the Owner and after giving the Contractor and the Contractor's surety, if any, seven days' notice, terminate employment of the Contractor and may, subject to any prior rights of the surety:

.1 Exclude the Contractor from the site and take possession of all materials, equipment, tools, and construction equipment and machinery thereon owned by the Contractor;

.2 Accept assignment of subcontracts pursuant to Section 5.4; and

.3 Finish the Work by whatever reasonable method the Owner may deem expedient. Upon written request of the Contractor, the Owner shall furnish to the Contractor a detailed accounting of the costs incurred by the Owner in finishing the Work.

§ 14.2.3 When the Owner terminates the Contract for one of the reasons stated in Section 14.2.1, the Contractor shall not be entitled to receive further payment until the Work is finished.

§ 14.2.4 If the unpaid balance of the Contract Sum exceeds costs of finishing the Work, including compensation for the Architect's services and expenses made necessary thereby, and other damages incurred by the Owner and not expressly waived, such excess shall be paid to the Contractor. If such costs and damages exceed the unpaid balance, the Contractor shall pay the difference to the Owner. The amount to be paid to the Contractor or Owner, as the case may be, shall be certified by the Initial Decision Maker, upon application, and this obligation for payment shall survive termination of the Contract.

AIA Document A201 – 2017. Copyright © 1911, 1915, 1918, 1925, 1937, 1951, 1958, 1961, 1963, 1966, 1970, 1976, 1987, 1997, 2007 and 2017. All rights reserved. "The American Institute of Architects," "American Institute of Architects," "AIA," the AIA Logo, and "AIA Contract Documents" are trademarks of The American Institute of Architects. This document was produced at 18:01:06 CST on 11/09/2026 under Subscription No.20240070886 which expires on 10/15/2027, is not for resale, is licensed for one-time use only, and may only be used in accordance with the AIA Contract Documents® Terms of Service. To report copyright violations, e-mail docinfo@aiacontracts.com.
User Notes: (6af25eb25a16cb79a1e84ce5)

§ 14.3 Suspension by the Owner for Convenience

§ 14.3.1 The Owner may, without cause, order the Contractor in writing to suspend, delay or interrupt the Work, in whole or in part for such period of time as the Owner may determine.

§ 14.3.2 The Contract Sum and Contract Time shall be adjusted for increases in the cost and time caused by suspension, delay, or interruption under Section 14.3.1. Adjustment of the Contract Sum shall include profit. No adjustment shall be made to the extent

- **.1** that performance is, was, or would have been, so suspended, delayed, or interrupted, by another cause for which the Contractor is responsible; or
- **.2** that an equitable adjustment is made or denied under another provision of the Contract.

§ 14.4 Termination by the Owner for Convenience

§ 14.4.1 The Owner may, at any time, terminate the Contract for the Owner's convenience and without cause.

§ 14.4.2 Upon receipt of notice from the Owner of such termination for the Owner's convenience, the Contractor shall

- **.1** cease operations as directed by the Owner in the notice;
- **.2** take actions necessary, or that the Owner may direct, for the protection and preservation of the Work; and
- **.3** except for Work directed to be performed prior to the effective date of termination stated in the notice, terminate all existing subcontracts and purchase orders and enter into no further subcontracts and purchase orders.

§ 14.4.3 In case of such termination for the Owner's convenience, the Owner shall pay the Contractor for Work properly executed; costs incurred by reason of the termination, including costs attributable to termination of Subcontracts; and the termination fee, if any, set forth in the Agreement.

ARTICLE 15 CLAIMS AND DISPUTES

§ 15.1 Claims

§ 15.1.1 Definition

A Claim is a demand or assertion by one of the parties seeking, as a matter of right, payment of money, a change in the Contract Time, or other relief with respect to the terms of the Contract. The term "Claim" also includes other disputes and matters in question between the Owner and Contractor arising out of or relating to the Contract. The responsibility to substantiate Claims shall rest with the party making the Claim. This Section 15.1.1 does not require the Owner to file a Claim in order to impose liquidated damages in accordance with the Contract Documents.

§ 15.1.2 Time Limits on Claims

The Owner and Contractor shall commence all Claims and causes of action against the other and arising out of or related to the Contract, whether in contract, tort, breach of warranty or otherwise, in accordance with the requirements of the binding dispute resolution method selected in the Agreement and within the period specified by applicable law, but in any case not more than 10 years after the date of Substantial Completion of the Work. The Owner and Contractor waive all Claims and causes of action not commenced in accordance with this Section 15.1.2.

§ 15.1.3 Notice of Claims

§ 15.1.3.1 Claims by either the Owner or Contractor, where the condition giving rise to the Claim is first discovered prior to expiration of the period for correction of the Work set forth in Section 12.2.2, shall be initiated by notice to the other party and to the Initial Decision Maker with a copy sent to the Architect, if the Architect is not serving as the Initial Decision Maker. Claims by either party under this Section 15.1.3.1 shall be initiated within 21 days after occurrence of the event giving rise to such Claim or within 21 days after the claimant first recognizes the condition giving rise to the Claim, whichever is later.

§ 15.1.3.2 Claims by either the Owner or Contractor, where the condition giving rise to the Claim is first discovered after expiration of the period for correction of the Work set forth in Section 12.2.2, shall be initiated by notice to the other party. In such event, no decision by the Initial Decision Maker is required.

AIA Document A201 – 2017. Copyright © 1911, 1915, 1918, 1925, 1937, 1951, 1958, 1961, 1963, 1966, 1970, 1976, 1987, 1997, 2007 and 2017. All rights reserved. "The American Institute of Architects," "American Institute of Architects," "AIA," the AIA Logo, and "AIA Contract Documents" are trademarks of The American Institute of Architects. This document was produced at 18:01:06 CST on 11/09/2026 under Subscription No.20240070886 which expires on 10/15/2027, is not for resale, is licensed for one-time use only, and may only be used in accordance with the AIA Contract Documents® Terms of Service. To report copyright violations, e-mail docinfo@aiacontracts.com.
User Notes: (6af25eb25a16cb79a1e84ce5)

§ 15.1.4 Continuing Contract Performance

§ 15.1.4.1 Pending final resolution of a Claim, except as otherwise agreed in writing or as provided in Section 9.7 and Article 14, the Contractor shall proceed diligently with performance of the Contract and the Owner shall continue to make payments in accordance with the Contract Documents.

§ 15.1.4.2 The Contract Sum and Contract Time shall be adjusted in accordance with the Initial Decision Maker's decision, subject to the right of either party to proceed in accordance with this Article 15. The Architect will issue Certificates for Payment in accordance with the decision of the Initial Decision Maker.

§ 15.1.5 Claims for Additional Cost

If the Contractor wishes to make a Claim for an increase in the Contract Sum, notice as provided in Section 15.1.3 shall be given before proceeding to execute the portion of the Work that is the subject of the Claim. Prior notice is not required for Claims relating to an emergency endangering life or property arising under Section 10.4.

§ 15.1.6 Claims for Additional Time

§ 15.1.6.1 If the Contractor wishes to make a Claim for an increase in the Contract Time, notice as provided in Section 15.1.3 shall be given. The Contractor's Claim shall include an estimate of cost and of probable effect of delay on progress of the Work. In the case of a continuing delay, only one Claim is necessary.

§ 15.1.6.2 If adverse weather conditions are the basis for a Claim for additional time, such Claim shall be documented by data substantiating that weather conditions were abnormal for the period of time, could not have been reasonably anticipated, and had an adverse effect on the scheduled construction.

§ 15.1.7 Waiver of Claims for Consequential Damages

The Contractor and Owner waive Claims against each other for consequential damages arising out of or relating to this Contract. This mutual waiver includes

.1 damages incurred by the Owner for rental expenses, for losses of use, income, profit, financing, business and reputation, and for loss of management or employee productivity or of the services of such persons; and

.2 damages incurred by the Contractor for principal office expenses including the compensation of personnel stationed there, for losses of financing, business and reputation, and for loss of profit, except anticipated profit arising directly from the Work.

This mutual waiver is applicable, without limitation, to all consequential damages due to either party's termination in accordance with Article 14. Nothing contained in this Section 15.1.7 shall be deemed to preclude assessment of liquidated damages, when applicable, in accordance with the requirements of the Contract Documents.

§ 15.2 Initial Decision

§ 15.2.1 Claims, excluding those where the condition giving rise to the Claim is first discovered after expiration of the period for correction of the Work set forth in Section 12.2.2 or arising under Sections 10.3, 10.4, and 11.5, shall be referred to the Initial Decision Maker for initial decision. The Architect will serve as the Initial Decision Maker, unless otherwise indicated in the Agreement. Except for those Claims excluded by this Section 15.2.1, an initial decision shall be required as a condition precedent to mediation of any Claim. If an initial decision has not been rendered within 30 days after the Claim has been referred to the Initial Decision Maker, the party asserting the Claim may demand mediation and binding dispute resolution without a decision having been rendered. Unless the Initial Decision Maker and all affected parties agree, the Initial Decision Maker will not decide disputes between the Contractor and persons or entities other than the Owner.

§ 15.2.2 The Initial Decision Maker will review Claims and within ten days of the receipt of a Claim take one or more of the following actions: (1) request additional supporting data from the claimant or a response with supporting data from the other party, (2) reject the Claim in whole or in part, (3) approve the Claim, (4) suggest a compromise, or (5) advise the parties that the Initial Decision Maker is unable to resolve the Claim if the Initial Decision Maker lacks sufficient information to evaluate the merits of the Claim or if the Initial Decision Maker concludes that, in the Initial Decision Maker's sole discretion, it would be inappropriate for the Initial Decision Maker to resolve the Claim.

AIA Document A201 – 2017. Copyright © 1911, 1915, 1918, 1925, 1937, 1951, 1958, 1961, 1963, 1966, 1970, 1976, 1987, 1997, 2007 and 2017. All rights reserved. "The American Institute of Architects," "American Institute of Architects," "AIA," the AIA Logo, and "AIA Contract Documents" are trademarks of The American Institute of Architects. This document was produced at 18:01:06 CST on 11/09/2026 under Subscription No.20240070886 which expires on 10/15/2027, is not for resale, is licensed for one-time use only, and may only be used in accordance with the AIA Contract Documents® Terms of Service. To report copyright violations, e-mail docinfo@aiacontracts.com.
User Notes: (6af25eb25a16cb79a1e84ce5)

§ 15.2.3 In evaluating Claims, the Initial Decision Maker may, but shall not be obligated to, consult with or seek information from either party or from persons with special knowledge or expertise who may assist the Initial Decision Maker in rendering a decision. The Initial Decision Maker may request the Owner to authorize retention of such persons at the Owner's expense.

§ 15.2.4 If the Initial Decision Maker requests a party to provide a response to a Claim or to furnish additional supporting data, such party shall respond, within ten days after receipt of the request, and shall either (1) provide a response on the requested supporting data, (2) advise the Initial Decision Maker when the response or supporting data will be furnished, or (3) advise the Initial Decision Maker that no supporting data will be furnished. Upon receipt of the response or supporting data, if any, the Initial Decision Maker will either reject or approve the Claim in whole or in part.

§ 15.2.5 The Initial Decision Maker will render an initial decision approving or rejecting the Claim, or indicating that the Initial Decision Maker is unable to resolve the Claim. This initial decision shall (1) be in writing; (2) state the reasons therefor; and (3) notify the parties and the Architect, if the Architect is not serving as the Initial Decision Maker, of any change in the Contract Sum or Contract Time or both. The initial decision shall be final and binding on the parties but subject to mediation and, if the parties fail to resolve their dispute through mediation, to binding dispute resolution.

§ 15.2.6 Either party may file for mediation of an initial decision at any time, subject to the terms of Section 15.2.6.1.

§ 15.2.6.1 Either party may, within 30 days from the date of receipt of an initial decision, demand in writing that the other party file for mediation. If such a demand is made and the party receiving the demand fails to file for mediation within 30 days after receipt thereof, then both parties waive their rights to mediate or pursue binding dispute resolution proceedings with respect to the initial decision.

§ 15.2.7 In the event of a Claim against the Contractor, the Owner may, but is not obligated to, notify the surety, if any, of the nature and amount of the Claim. If the Claim relates to a possibility of a Contractor's default, the Owner may, but is not obligated to, notify the surety and request the surety's assistance in resolving the controversy.

§ 15.2.8 If a Claim relates to or is the subject of a mechanic's lien, the party asserting such Claim may proceed in accordance with applicable law to comply with the lien notice or filing deadlines.

§ 15.3 Mediation

§ 15.3.1 Claims, disputes, or other matters in controversy arising out of or related to the Contract, except those waived as provided for in Sections 9.10.4, 9.10.5, and 15.1.7, shall be subject to mediation as a condition precedent to binding dispute resolution.

§ 15.3.2 The parties shall endeavor to resolve their Claims by mediation which, unless the parties mutually agree otherwise, shall be administered by the American Arbitration Association in accordance with its Construction Industry Mediation Procedures in effect on the date of the Agreement. A request for mediation shall be made in writing, delivered to the other party to the Contract, and filed with the person or entity administering the mediation. The request may be made concurrently with the filing of binding dispute resolution proceedings but, in such event, mediation shall proceed in advance of binding dispute resolution proceedings, which shall be stayed pending mediation for a period of 60 days from the date of filing, unless stayed for a longer period by agreement of the parties or court order. If an arbitration is stayed pursuant to this Section 15.3.2, the parties may nonetheless proceed to the selection of the arbitrator(s) and agree upon a schedule for later proceedings.

§ 15.3.3 Either party may, within 30 days from the date that mediation has been concluded without resolution of the dispute or 60 days after mediation has been demanded without resolution of the dispute, demand in writing that the other party file for binding dispute resolution. If such a demand is made and the party receiving the demand fails to file for binding dispute resolution within 60 days after receipt thereof, then both parties waive their rights to binding dispute resolution proceedings with respect to the initial decision.

AIA Document A201 – 2017. Copyright © 1911, 1915, 1918, 1925, 1937, 1951, 1958, 1961, 1963, 1966, 1970, 1976, 1987, 1997, 2007 and 2017. All rights reserved. "The American Institute of Architects," "American Institute of Architects," "AIA," the AIA Logo, and "AIA Contract Documents" are trademarks of The American Institute of Architects. This document was produced at 18:01:06 CST on 11/09/2026 under Subscription No.20240070886 which expires on 10/15/2027, is not for resale, is licensed for one-time use only, and may only be used in accordance with the AIA Contract Documents® Terms of Service. To report copyright violations, e-mail docinfo@aiacontracts.com.
User Notes: (6af25eb25a16cb79a1e84ce5)

§ 15.3.4 The parties shall share the mediator's fee and any filing fees equally. The mediation shall be held in the place where the Project is located, unless another location is mutually agreed upon. Agreements reached in mediation shall be enforceable as settlement agreements in any court having jurisdiction thereof.

§ 15.4 Arbitration

§ 15.4.1 If the parties have selected arbitration as the method for binding dispute resolution in the Agreement, any Claim subject to, but not resolved by, mediation shall be subject to arbitration which, unless the parties mutually agree otherwise, shall be administered by the American Arbitration Association in accordance with its Construction Industry Arbitration Rules in effect on the date of the Agreement. The Arbitration shall be conducted in the place where the Project is located, unless another location is mutually agreed upon. A demand for arbitration shall be made in writing, delivered to the other party to the Contract, and filed with the person or entity administering the arbitration. The party filing a notice of demand for arbitration must assert in the demand all Claims then known to that party on which arbitration is permitted to be demanded.

§ 15.4.1.1 A demand for arbitration shall be made no earlier than concurrently with the filing of a request for mediation, but in no event shall it be made after the date when the institution of legal or equitable proceedings based on the Claim would be barred by the applicable statute of limitations. For statute of limitations purposes, receipt of a written demand for arbitration by the person or entity administering the arbitration shall constitute the institution of legal or equitable proceedings based on the Claim.

§ 15.4.2 The award rendered by the arbitrator or arbitrators shall be final, and judgment may be entered upon it in accordance with applicable law in any court having jurisdiction thereof.

§ 15.4.3 The foregoing agreement to arbitrate and other agreements to arbitrate with an additional person or entity duly consented to by parties to the Agreement, shall be specifically enforceable under applicable law in any court having jurisdiction thereof.

§ 15.4.4 Consolidation or Joinder

§ 15.4.4.1 Subject to the rules of the American Arbitration Association or other applicable arbitration rules, either party may consolidate an arbitration conducted under this Agreement with any other arbitration to which it is a party provided that (1) the arbitration agreement governing the other arbitration permits consolidation, (2) the arbitrations to be consolidated substantially involve common questions of law or fact, and (3) the arbitrations employ materially similar procedural rules and methods for selecting arbitrator(s).

§ 15.4.4.2 Subject to the rules of the American Arbitration Association or other applicable arbitration rules, either party may include by joinder persons or entities substantially involved in a common question of law or fact whose presence is required if complete relief is to be accorded in arbitration, provided that the party sought to be joined consents in writing to such joinder. Consent to arbitration involving an additional person or entity shall not constitute consent to arbitration of any claim, dispute or other matter in question not described in the written consent.

§ 15.4.4.3 The Owner and Contractor grant to any person or entity made a party to an arbitration conducted under this Section 15.4, whether by joinder or consolidation, the same rights of joinder and consolidation as those of the Owner and Contractor under this Agreement.

AIA Document A201 – 2017. Copyright © 1911, 1915, 1918, 1925, 1937, 1951, 1958, 1961, 1963, 1966, 1970, 1976, 1987, 1997, 2007 and 2017. All rights reserved. "The American Institute of Architects," "American Institute of Architects," "AIA," the AIA Logo, and "AIA Contract Documents" are trademarks of The American Institute of Architects. This document was produced at 18:01:06 CST on 11/09/2026 under Subscription No.20240070886 which expires on 10/15/2027, is not for resale, is licensed for one-time use only, and may only be used in accordance with the AIA Contract Documents® Terms of Service. To report copyright violations, e-mail docinfo@aiacontracts.com.
User Notes: (6af25eb25a16cb79a1e84ce5)

Additions and Deletions Report for
AIA® Document A201® – 2017

This Additions and Deletions Report, as defined on page 1 of the associated document, reproduces below all text the author has added to the standard form AIA document in order to complete it, as well as any text the author may have added to or deleted from the original AIA text. Added text is shown underlined. Deleted text is indicated with a horizontal line through the original AIA text.

Note: This Additions and Deletions Report is provided for information purposes only and is not incorporated into or constitute any part of the associated AIA document. This Additions and Deletions Report and its associated document were generated simultaneously by AIA software at 18:01:06 CST on 11/09/2026.

PAGE 1:

The Colony Recreation Center

4431 Augusta Street

The Colony, Texas 75056

The City of The Colony, Texas

6053 Main Street

The Colony, Texas 75056

Huitt-Zollars Architects

5460 LBJ Freeway Suite 1500

Dallas, Texas 75240

PAGE 16:

Any use of, or reliance on, all or a portion of a building information model without agreement to ~~written~~ protocols governing the use of, and reliance on, the information contained in the model and without having those protocols set forth in AIA Document E203™–2013, Building Information Modeling and Digital Data Exhibit, and the requisite AIA Document G202™–2013, Project Building Information Modeling Protocol Form, shall be at the using or relying party's sole risk and without liability to the other party and its contractors or consultants, the authors of, or contributors to, the building information model, and each of their agents and employees.

The parties shall agree upon ~~written~~ protocols governing the transmission and use of~~, and reliance on,~~ Instruments of Service or any other information or documentation in digital form. The parties will use AIA Document E203™–2013, Building Information Modeling and Digital Data Exhibit, to establish the protocols for the development, use, transmission, and exchange of digital data.

Additions and Deletions Report for AIA Document A201 – 2017. Copyright © 1911, 1915, 1918, 1925, 1937, 1951, 1958, 1961, 1963, 1966, 1970, 1976, 1987, 1997, 2007 and 2017. All rights reserved. "The American Institute of Architects," "American Institute of Architects," "AIA," the AIA Logo, and "AIA Contract Documents" are trademarks of The American Institute of Architects. This document was produced at 18:01:06 CST on 11/09/2026 under Subscription No.20240070886 which expires on 10/15/2027, is not for resale, is licensed for one-time use only, and may only be used in accordance with the AIA Contract Documents® Terms of Service. To report copyright violations, e-mail docinfo@aiacontracts.com.
User Notes: (6af25eb25a16cb79a1e84ce5)

Certification of Document's Authenticity

AIA® Document D401™ – 2003

I, Reilly Freeman, hereby certify, to the best of my knowledge, information and belief, that I created the attached final document simultaneously with its associated Additions and Deletions Report and this certification at 18:01:06 CST on 11/09/2026 under Order No. 20240070886 from AIA Contract Documents software and that in preparing the attached final document I made no changes to the original text of AIA® Document A201™ - 2017, General Conditions of the Contract for Construction, other than those additions and deletions shown in the associated Additions and Deletions Report.

R. Freeman

(Signed)

President

(Title)

November 9, 2026

(Dated)

AIA Document D401 – 2003. Copyright © 1992 and 2003. All rights reserved. "The American Institute of Architects," "American Institute of Architects," "AIA," the AIA Logo, and "AIA Contract Documents" are trademarks of The American Institute of Architects. This document was produced at 18:01:06 CST on 11/09/2026 under Order No.20240070886 which expires on 10/15/2027, is not for resale, is licensed for one-time use only, and may only be used in accordance with the AIA Contract Documents® Terms of Service. To report copyright violations, e-mail docinfo@aiacontracts.com.
User Notes: (6af25eb25a16cb79a1e84ce5)

AIA® Document A133® – 2019

Standard Form of Agreement Between Owner and Construction Manager as Constructor where the basis of payment is the Cost of the Work Plus a Fee with a Guaranteed Maximum Price

AGREEMENT made as of the 9th day of November in the year 2026
(In words, indicate day, month, and year.)

BETWEEN the Owner:
(Name, legal status, address, and other information)

The City of The Colony, Texas
6053 Main Street
The Colony, Texas 75056

and the Construction Manager:
(Name, legal status, address, and other information)

Steele & Freeman, Inc.
1301 Lawson Rd.
Fort Worth, Texas 76131

for the following Project:
(Name, location, and detailed description)

The Colony Recreation Center
4431 Augusta Street
The Colony, Texas 75056

The Architect:
(Name, legal status, address, and other information)

Huitt-Zollars Architects
5460 LBJ Freeway Suite 1500
Dallas, Texas 75240

The Owner and Construction Manager agree as follows.

ADDITIONS AND DELETIONS:
The author of this document may have revised the text of the original AIA standard form. An *Additions and Deletions Report* that notes revisions to the standard form text is available from the author and should be reviewed. A vertical line in the left margin of this document indicates where the author has added to or deleted from the original AIA text.

This document has important legal consequences. Consultation with an attorney is encouraged with respect to its completion or modification.

AIA Document A201™–2017, General Conditions of the Contract for Construction, is adopted in this document by reference. Do not use with other general conditions unless this document is modified.

AIA Document A133 – 2019. Copyright © 1991, 2003, 2009, and 2019. All rights reserved. "The American Institute of Architects," "American Institute of Architects," "AIA," the AIA Logo, and "AIA Contract Documents" are trademarks of The American Institute of Architects. This document was produced at 17:56:15 CST on 11/09/2026 under Subscription No.20240070886 which expires on 10/15/2027, is not for resale, is licensed for one-time use only, and may only be used in accordance with the AIA Contract Documents® Terms of Service. To report copyright violations, e-mail docinfo@aiacontracts.com.
User Notes: (6af25d5fd86fb4f88b5459cc)

TABLE OF ARTICLES

1 INITIAL INFORMATION

2 GENERAL PROVISIONS

3 CONSTRUCTION MANAGER'S RESPONSIBILITIES

4 OWNER'S RESPONSIBILITIES

5 COMPENSATION AND PAYMENTS FOR PRECONSTRUCTION PHASE SERVICES

6 COMPENSATION FOR CONSTRUCTION PHASE SERVICES

7 COST OF THE WORK FOR CONSTRUCTION PHASE

8 DISCOUNTS, REBATES, AND REFUNDS

9 SUBCONTRACTS AND OTHER AGREEMENTS

10 ACCOUNTING RECORDS

11 PAYMENTS FOR CONSTRUCTION PHASE SERVICES

12 DISPUTE RESOLUTION

13 TERMINATION OR SUSPENSION

14 MISCELLANEOUS PROVISIONS

15 SCOPE OF THE AGREEMENT

EXHIBIT A GUARANTEED MAXIMUM PRICE AMENDMENT
EXHIBIT B INSURANCE AND BONDS

ARTICLE 1 INITIAL INFORMATION

§ 1.1 This Agreement is based on the Initial Information set forth in this Section 1.1.
(For each item in this section, insert the information or a statement such as "not applicable" or "unknown at time of execution.")

§ 1.1.1 The Owner's program for the Project, as described in Section 4.1.1:
(Insert the Owner's program, identify documentation that establishes the Owner's program, or state the manner in which the program will be developed.)

TBD

§ 1.1.2 The Project's physical characteristics:
(Identify or describe pertinent information about the Project's physical characteristics, such as size; location; dimensions; geotechnical reports; site boundaries; topographic surveys; traffic and utility studies; availability of public and private utilities and services; legal description of the site, etc.)

AIA Document A133 – 2019. Copyright © 1991, 2003, 2009, and 2019. All rights reserved. "The American Institute of Architects," "American Institute of Architects," "AIA," the AIA Logo, and "AIA Contract Documents" are trademarks of The American Institute of Architects. This document was produced at 17:56:15 CST on 11/09/2026 under Subscription No.20240070886 which expires on 10/15/2027, is not for resale, is licensed for one-time use only, and may only be used in accordance with the AIA Contract Documents® Terms of Service. To report copyright violations, e-mail docinfo@aiacontracts.com.
User Notes: (6af25d5fd86fb4f88b5459cc)

TBD

§ 1.1.3 The Owner's budget for the Guaranteed Maximum Price, as defined in Article 6:
(Provide total and, if known, a line item breakdown.)

TBD

§ 1.1.4 The Owner's anticipated design and construction milestone dates:

.1 Design phase milestone dates, if any:

N/A

.2 Construction commencement date:

N/A

.3 Substantial Completion date or dates:

N/A

.4 Other milestone dates:

N/A

§ 1.1.5 The Owner's requirements for accelerated or fast-track scheduling, or phased construction, are set forth below:
(Identify any requirements for fast-track scheduling or phased construction.)

N/A

§ 1.1.6 The Owner's anticipated Sustainable Objective for the Project:
(Identify and describe the Owner's Sustainable Objective for the Project, if any.)

N/A

§ 1.1.6.1 If the Owner identifies a Sustainable Objective, the Owner and Construction Manager shall complete and incorporate AIA Document E234™–2019, Sustainable Projects Exhibit, Construction Manager as Constructor Edition, into this Agreement to define the terms, conditions and services related to the Owner's Sustainable Objective. If E234–2019 is incorporated into this agreement, the Owner and Construction Manager shall incorporate the completed E234–2019 into the agreements with the consultants and contractors performing services or Work in any way associated with the Sustainable Objective.

§ 1.1.7 Other Project information:
(Identify special characteristics or needs of the Project not provided elsewhere.)

N/A

§ 1.1.8 The Owner identifies the following representative in accordance with Section 4.2:
(List name, address, and other contact information.)

TBD

AIA Document A133 – 2019. Copyright © 1991, 2003, 2009, and 2019. All rights reserved. "The American Institute of Architects," "American Institute of Architects," "AIA," the AIA Logo, and "AIA Contract Documents" are trademarks of The American Institute of Architects. This document was produced at 17:56:15 CST on 11/09/2026 under Subscription No.20240070886 which expires on 10/15/2027, is not for resale, is licensed for one-time use only, and may only be used in accordance with the AIA Contract Documents® Terms of Service. To report copyright violations, e-mail docinfo@aiacontracts.com.
User Notes: (6af25d5fd86fb4f88b5459cc)

§ 1.1.9 The persons or entities, in addition to the Owner's representative, who are required to review the Construction Manager's submittals to the Owner are as follows:
(List name, address and other contact information.)

N/A

§ 1.1.10 The Owner shall retain the following consultants and contractors:
(List name, legal status, address, and other contact information.)

.1 Geotechnical Engineer:

N/A

.2 Civil Engineer:

N/A

.3 Other, if any:
(List any other consultants retained by the Owner, such as a Project or Program Manager.)

N/A

§ 1.1.11 The Architect's representative:
(List name, address, and other contact information.)

TBD

§ 1.1.12 The Construction Manager identifies the following representative in accordance with Article 3:
(List name, address, and other contact information.)

Bradley Walters, Project Manager
1301 Lawson Rd.
Fort Worth, Texas 76131
bwalters@steelefreeman.com,
817-232-4742

§ 1.1.13 The Owner's requirements for the Construction Manager's staffing plan for Preconstruction Services, as required under Section 3.1.9:
(List any Owner-specific requirements to be included in the staffing plan.)

N/A

§ 1.1.14 The Owner's requirements for subcontractor procurement for the performance of the Work:
(List any Owner-specific requirements for subcontractor procurement.)

N/A

§ 1.1.15 Other Initial Information on which this Agreement is based:

N/A

§ 1.2 The Owner and Construction Manager may rely on the Initial Information. Both parties, however, recognize that such information may materially change and, in that event, the Owner and the Construction Manager shall appropriately adjust the Project schedule, the Construction Manager's services, and the Construction Manager's

AIA Document A133 – 2019. Copyright © 1991, 2003, 2009, and 2019. All rights reserved. "The American Institute of Architects," "American Institute of Architects," "AIA," the AIA Logo, and "AIA Contract Documents" are trademarks of The American Institute of Architects. This document was produced at 17:56:15 CST on 11/09/2026 under Subscription No.20240070886 which expires on 10/15/2027, is not for resale, is licensed for one-time use only, and may only be used in accordance with the AIA Contract Documents® Terms of Service. To report copyright violations, e-mail docinfo@aiacontracts.com.
User Notes: (6af25d5fd86fb4f88b5459cc)

compensation. The Owner shall adjust the Owner's budget for the Guaranteed Maximum Price and the Owner's anticipated design and construction milestones, as necessary, to accommodate material changes in the Initial Information.

§ 1.3 Neither the Owner's nor the Construction Manager's representative shall be changed without ten days' prior notice to the other party.

ARTICLE 2 GENERAL PROVISIONS

§ 2.1 The Contract Documents

The Contract Documents consist of this Agreement, Conditions of the Contract (General, Supplementary and other Conditions), Drawings, Specifications, Addenda issued prior to execution of this Agreement, other documents listed in this Agreement, and Modifications issued after execution of this Agreement, all of which form the Contract and are as fully a part of the Contract as if attached to this Agreement or repeated herein. Upon the Owner's acceptance of the Construction Manager's Guaranteed Maximum Price proposal, the Contract Documents will also include the documents described in Section 3.2.3 and identified in the Guaranteed Maximum Price Amendment and revisions prepared by the Architect and furnished by the Owner as described in Section 3.2.8. The Contract represents the entire and integrated agreement between the parties hereto and supersedes prior negotiations, representations or agreements, either written or oral. If anything in the other Contract Documents, other than a Modification, is inconsistent with this Agreement, this Agreement shall govern. An enumeration of the Contract Documents, other than a Modification, appears in Article 15.

§ 2.2 Relationship of the Parties

The Construction Manager accepts the relationship of trust and confidence established by this Agreement and covenants with the Owner to cooperate with the Architect and exercise the Construction Manager's skill and judgment in furthering the interests of the Owner to furnish efficient construction administration, management services, and supervision; to furnish at all times an adequate supply of workers and materials; and to perform the Work in an expeditious and economical manner consistent with the Owner's interests. The Owner agrees to furnish or approve, in a timely manner, information required by the Construction Manager and to make payments to the Construction Manager in accordance with the requirements of the Contract Documents.

§ 2.3 General Conditions

§ 2.3.1 For the Preconstruction Phase, AIA Document A201™–2017, General Conditions of the Contract for Construction, shall apply as follows: Section 1.5, Ownership and Use of Documents; Section 1.7, Digital Data Use and Transmission; Section 1.8, Building Information Model Use and Reliance; Section 2.2.4, Confidential Information; Section 3.12.10, Professional Services; Section 10.3, Hazardous Materials; Section 13.1, Governing Law. The term "Contractor" as used in A201–2017 shall mean the Construction Manager.

§ 2.3.2 For the Construction Phase, the general conditions of the contract shall be as set forth in A201–2017, which document is incorporated herein by reference. The term "Contractor" as used in A201–2017 shall mean the Construction Manager.

ARTICLE 3 CONSTRUCTION MANAGER'S RESPONSIBILITIES

The Construction Manager's Preconstruction Phase responsibilities are set forth in Sections 3.1 and 3.2, and in the applicable provisions of A201-2017 referenced in Section 2.3.1. The Construction Manager's Construction Phase responsibilities are set forth in Section 3.3. The Owner and Construction Manager may agree, in consultation with the Architect, for the Construction Phase to commence prior to completion of the Preconstruction Phase, in which case, both phases will proceed concurrently. The Construction Manager shall identify a representative authorized to act on behalf of the Construction Manager with respect to the Project.

§ 3.1 Preconstruction Phase

§ 3.1.1 Extent of Responsibility

The Construction Manager shall exercise reasonable care in performing its Preconstruction Services. The Owner and Architect shall be entitled to rely on, and shall not be responsible for, the accuracy, completeness, and timeliness of services and information furnished by the Construction Manager. The Construction Manager, however, does not warrant or guarantee estimates and schedules except as may be included as part of the Guaranteed Maximum Price.

AIA Document A133 – 2019. Copyright © 1991, 2003, 2009, and 2019. All rights reserved. "The American Institute of Architects," "American Institute of Architects," "AIA," the AIA Logo, and "AIA Contract Documents" are trademarks of The American Institute of Architects. This document was produced at 17:56:15 CST on 11/09/2026 under Subscription No.20240070886 which expires on 10/15/2027, is not for resale, is licensed for one-time use only, and may only be used in accordance with the AIA Contract Documents® Terms of Service. To report copyright violations, e-mail docinfo@aiacontracts.com.
User Notes: (6af25d5fd86fb4f88b5459cc)

The Construction Manager is not required to ascertain that the Drawings and Specifications are in accordance with applicable laws, statutes, ordinances, codes, rules and regulations, or lawful orders of public authorities, but the Construction Manager shall promptly report to the Architect and Owner any nonconformity discovered by or made known to the Construction Manager as a request for information in such form as the Architect may require.

§ 3.1.2 The Construction Manager shall provide a preliminary evaluation of the Owner's program, schedule and construction budget requirements, each in terms of the other.

§ 3.1.3 Consultation

§ 3.1.3.1 The Construction Manager shall schedule and conduct meetings with the Architect and Owner to discuss such matters as procedures, progress, coordination, and scheduling of the Work.

§ 3.1.3.2 The Construction Manager shall advise the Owner and Architect on proposed site use and improvements, selection of materials, building systems, and equipment. The Construction Manager shall also provide recommendations to the Owner and Architect, consistent with the Project requirements, on constructability; availability of materials and labor; time requirements for procurement, installation and construction; prefabrication; and factors related to construction cost including, but not limited to, costs of alternative designs or materials, preliminary budgets, life-cycle data, and possible cost reductions. The Construction Manager shall consult with the Architect regarding professional services to be provided by the Construction Manager during the Construction Phase.

§ 3.1.3.3 The Construction Manager shall assist the Owner and Architect in establishing building information modeling and digital data protocols for the Project, using AIA Document E203™–2013, Building Information Modeling and Digital Data Exhibit, to establish the protocols for the development, use, transmission, and exchange of digital data.

§ 3.1.4 Project Schedule

When Project requirements in Section 4.1.1 have been sufficiently identified, the Construction Manager shall prepare and periodically update a Project schedule for the Architect's review and the Owner's acceptance. The Construction Manager shall obtain the Architect's approval for the portion of the Project schedule relating to the performance of the Architect's services. The Project schedule shall coordinate and integrate the Construction Manager's services, the Architect's services, other Owner consultants' services, and the Owner's responsibilities; and identify items that affect the Project's timely completion. The updated Project schedule shall include the following: submission of the Guaranteed Maximum Price proposal; components of the Work; times of commencement and completion required of each Subcontractor; ordering and delivery of products, including those that must be ordered in advance of construction; and the occupancy requirements of the Owner.

§ 3.1.5 Phased Construction

The Construction Manager, in consultation with the Architect, shall provide recommendations with regard to accelerated or fast-track scheduling, procurement, and sequencing for phased construction. The Construction Manager shall take into consideration cost reductions, cost information, constructability, provisions for temporary facilities, and procurement and construction scheduling issues.

§ 3.1.6 Cost Estimates

§ 3.1.6.1 Based on the preliminary design and other design criteria prepared by the Architect, the Construction Manager shall prepare, for the Architect's review and the Owner's approval, preliminary estimates of the Cost of the Work or the cost of program requirements using area, volume, or similar conceptual estimating techniques. If the Architect or Construction Manager suggests alternative materials and systems, the Construction Manager shall provide cost evaluations of those alternative materials and systems.

§ 3.1.6.2 As the Architect progresses with the preparation of the Schematic Design, Design Development and Construction Documents, the Construction Manager shall prepare and update, at appropriate intervals agreed to by the Owner, Construction Manager and Architect, an estimate of the Cost of the Work with increasing detail and refinement. The Construction Manager shall include in the estimate those costs to allow for the further development of the design, price escalation, and market conditions, until such time as the Owner and Construction Manager

AIA Document A133 – 2019. Copyright © 1991, 2003, 2009, and 2019. All rights reserved. "The American Institute of Architects," "American Institute of Architects," "AIA," the AIA Logo, and "AIA Contract Documents" are trademarks of The American Institute of Architects. This document was produced at 17:56:15 CST on 11/09/2026 under Subscription No.20240070886 which expires on 10/15/2027, is not for resale, is licensed for one-time use only, and may only be used in accordance with the AIA Contract Documents® Terms of Service. To report copyright violations, e-mail docinfo@aiacontracts.com.
User Notes: (6af25d5fd86fb4f88b5459cc)

agree on a Guaranteed Maximum Price for the Work. The estimate shall be provided for the Architect's review and the Owner's approval. The Construction Manager shall inform the Owner and Architect in the event that the estimate of the Cost of the Work exceeds the latest approved Project budget, and make recommendations for corrective action.

§ 3.1.6.3 If the Architect is providing cost estimating services as a Supplemental Service, and a discrepancy exists between the Construction Manager's cost estimates and the Architect's cost estimates, the Construction Manager and the Architect shall work together to reconcile the cost estimates.

§ 3.1.7 As the Architect progresses with the preparation of the Schematic Design, Design Development and Construction Documents, the Construction Manager shall consult with the Owner and Architect and make recommendations regarding constructability and schedules, for the Architect's review and the Owner's approval.

§ 3.1.8 The Construction Manager shall provide recommendations and information to the Owner and Architect regarding equipment, materials, services, and temporary Project facilities.

§ 3.1.9 The Construction Manager shall provide a staffing plan for Preconstruction Phase services for the Owner's review and approval.

§ 3.1.10 If the Owner identified a Sustainable Objective in Article 1, the Construction Manager shall fulfill its Preconstruction Phase responsibilities as required in AIA Document E234™–2019, Sustainable Projects Exhibit, Construction Manager as Constructor Edition, attached to this Agreement.

§ 3.1.11 Subcontractors and Suppliers

§ 3.1.11.1 If the Owner has provided requirements for subcontractor procurement in section 1.1.14, the Construction Manager shall provide a subcontracting plan, addressing the Owner's requirements, for the Owner's review and approval.

§ 3.1.11.2 The Construction Manager shall develop bidders' interest in the Project.

§ 3.1.11.3 The processes described in Article 9 shall apply if bid packages will be issued during the Preconstruction Phase.

§ 3.1.12 Procurement

The Construction Manager shall prepare, for the Architect's review and the Owner's acceptance, a procurement schedule for items that must be ordered in advance of construction. The Construction Manager shall expedite and coordinate the ordering and delivery of materials that must be ordered in advance of construction. If the Owner agrees to procure any items prior to the establishment of the Guaranteed Maximum Price, the Owner shall procure the items on terms and conditions acceptable to the Construction Manager. Upon the establishment of the Guaranteed Maximum Price, the Owner shall assign all contracts for these items to the Construction Manager and the Construction Manager shall thereafter accept responsibility for them.

§ 3.1.13 Compliance with Laws

The Construction Manager shall comply with applicable laws, statutes, ordinances, codes, rules and regulations, and lawful orders of public authorities applicable to its performance under this Contract, and with equal employment opportunity programs, and other programs as may be required by governmental and quasi-governmental authorities.

§ 3.1.14 Other Preconstruction Services

Insert a description of any other Preconstruction Phase services to be provided by the Construction Manager, or reference an exhibit attached to this document

(Describe any other Preconstruction Phase services, such as providing cash flow projections, development of a project information management system, early selection or procurement of subcontractors, etc.)

N/A

AIA Document A133 – 2019. Copyright © 1991, 2003, 2009, and 2019. All rights reserved. "The American Institute of Architects," "American Institute of Architects," "AIA," the AIA Logo, and "AIA Contract Documents" are trademarks of The American Institute of Architects. This document was produced at 17:56:15 CST on 11/09/2026 under Subscription No.20240070886 which expires on 10/15/2027, is not for resale, is licensed for one-time use only, and may only be used in accordance with the AIA Contract Documents® Terms of Service. To report copyright violations, e-mail docinfo@aiacontracts.com.
User Notes: (6af25d5fd86fb4f88b5459cc)

§ 3.2 Guaranteed Maximum Price Proposal

§ 3.2.1 At a time to be mutually agreed upon by the Owner and the Construction Manager, the Construction Manager shall prepare a Guaranteed Maximum Price proposal for the Owner's and Architect's review, and the Owner's acceptance. The Guaranteed Maximum Price in the proposal shall be the sum of the Construction Manager's estimate of the Cost of the Work, the Construction Manager's contingency described in Section 3.2.4, and the Construction Manager's Fee described in Section 6.1.2.

§ 3.2.2 To the extent that the Contract Documents are anticipated to require further development, the Guaranteed Maximum Price includes the costs attributable to such further development consistent with the Contract Documents and reasonably inferable therefrom. Such further development does not include changes in scope, systems, kinds and quality of materials, finishes, or equipment, all of which, if required, shall be incorporated by Change Order.

§ 3.2.3 The Construction Manager shall include with the Guaranteed Maximum Price proposal a written statement of its basis, which shall include the following:

.1 A list of the Drawings and Specifications, including all Addenda thereto, and the Conditions of the Contract;

.2 A list of the clarifications and assumptions made by the Construction Manager in the preparation of the Guaranteed Maximum Price proposal, including assumptions under Section 3.2.2;

.3 A statement of the proposed Guaranteed Maximum Price, including a statement of the estimated Cost of the Work organized by trade categories or systems, including allowances; the Construction Manager's contingency set forth in Section 3.2.4; and the Construction Manager's Fee;

.4 The anticipated date of Substantial Completion upon which the proposed Guaranteed Maximum Price is based; and

.5 A date by which the Owner must accept the Guaranteed Maximum Price.

§ 3.2.4 In preparing the Construction Manager's Guaranteed Maximum Price proposal, the Construction Manager shall include a contingency for the Construction Manager's exclusive use to cover those costs that are included in the Guaranteed Maximum Price but not otherwise allocated to another line item or included in a Change Order.

§ 3.2.5 The Construction Manager shall meet with the Owner and Architect to review the Guaranteed Maximum Price proposal. In the event that the Owner or Architect discover any inconsistencies or inaccuracies in the information presented, they shall promptly notify the Construction Manager, who shall make appropriate adjustments to the Guaranteed Maximum Price proposal, its basis, or both.

§ 3.2.6 If the Owner notifies the Construction Manager that the Owner has accepted the Guaranteed Maximum Price proposal in writing before the date specified in the Guaranteed Maximum Price proposal, the Guaranteed Maximum Price proposal shall be deemed effective without further acceptance from the Construction Manager. Following acceptance of a Guaranteed Maximum Price, the Owner and Construction Manager shall execute the Guaranteed Maximum Price Amendment amending this Agreement, a copy of which the Owner shall provide to the Architect. The Guaranteed Maximum Price Amendment shall set forth the agreed upon Guaranteed Maximum Price with the information and assumptions upon which it is based.

§ 3.2.7 The Construction Manager shall not incur any cost to be reimbursed as part of the Cost of the Work prior to the execution of the Guaranteed Maximum Price Amendment, unless the Owner provides prior written authorization for such costs.

§ 3.2.8 The Owner shall authorize preparation of revisions to the Contract Documents that incorporate the agreed-upon assumptions and clarifications contained in the Guaranteed Maximum Price Amendment. The Owner shall promptly furnish such revised Contract Documents to the Construction Manager. The Construction Manager shall notify the Owner and Architect of any inconsistencies between the agreed-upon assumptions and clarifications contained in the Guaranteed Maximum Price Amendment and the revised Contract Documents.

§ 3.2.9 The Construction Manager shall include in the Guaranteed Maximum Price all sales, consumer, use and similar taxes for the Work provided by the Construction Manager that are legally enacted, whether or not yet effective, at the time the Guaranteed Maximum Price Amendment is executed.

AIA Document A133 – 2019. Copyright © 1991, 2003, 2009, and 2019. All rights reserved. "The American Institute of Architects," "American Institute of Architects," "AIA," the AIA Logo, and "AIA Contract Documents" are trademarks of The American Institute of Architects. This document was produced at 17:56:15 CST on 11/09/2026 under Subscription No.20240070886 which expires on 10/15/2027, is not for resale, is licensed for one-time use only, and may only be used in accordance with the AIA Contract Documents® Terms of Service. To report copyright violations, e-mail docinfo@aiacontracts.com.
User Notes: (6af25d5fd86fb4f88b5459cc)

§ 3.3 Construction Phase

§ 3.3.1 General

§ 3.3.1.1 For purposes of Section 8.1.2 of A201–2017, the date of commencement of the Work shall mean the date of commencement of the Construction Phase.

§ 3.3.1.2 The Construction Phase shall commence upon the Owner's execution of the Guaranteed Maximum Price Amendment or, prior to acceptance of the Guaranteed Maximum Price proposal, by written agreement of the parties. The written agreement shall set forth a description of the Work to be performed by the Construction Manager, and any insurance and bond requirements for Work performed prior to execution of the Guaranteed Maximum Price Amendment.

§ 3.3.2 Administration

§ 3.3.2.1 The Construction Manager shall schedule and conduct meetings to discuss such matters as procedures, progress, coordination, scheduling, and status of the Work. The Construction Manager shall prepare and promptly distribute minutes of the meetings to the Owner and Architect.

§ 3.3.2.2 Upon the execution of the Guaranteed Maximum Price Amendment, the Construction Manager shall prepare and submit to the Owner and Architect a construction schedule for the Work and a submittal schedule in accordance with Section 3.10 of A201–2017.

§ 3.3.2.3 Monthly Report

The Construction Manager shall record the progress of the Project. On a monthly basis, or otherwise as agreed to by the Owner, the Construction Manager shall submit written progress reports to the Owner and Architect, showing percentages of completion and other information required by the Owner.

§ 3.3.2.4 Daily Logs

The Construction Manager shall keep, and make available to the Owner and Architect, a daily log containing a record for each day of weather, portions of the Work in progress, number of workers on site, identification of equipment on site, problems that might affect progress of the work, accidents, injuries, and other information required by the Owner.

§ 3.3.2.5 Cost Control

The Construction Manager shall develop a system of cost control for the Work, including regular monitoring of actual costs for activities in progress and estimates for uncompleted tasks and proposed changes. The Construction Manager shall identify variances between actual and estimated costs and report the variances to the Owner and Architect, and shall provide this information in its monthly reports to the Owner and Architect, in accordance with Section 3.3.2.3 above.

ARTICLE 4 OWNER'S RESPONSIBILITIES

§ 4.1 Information and Services Required of the Owner

§ 4.1.1 The Owner shall provide information with reasonable promptness, regarding requirements for and limitations on the Project, including a written program which shall set forth the Owner's objectives, constraints, and criteria, including schedule, space requirements and relationships, flexibility and expandability, special equipment, systems, sustainability and site requirements.

§ 4.1.2 Prior to the execution of the Guaranteed Maximum Price Amendment, the Construction Manager may request in writing that the Owner provide reasonable evidence that the Owner has made financial arrangements to fulfill the Owner's obligations under the Contract. After execution of the Guaranteed Maximum Price Amendment, the Construction Manager may request such information as set forth in A201-2017 Section 2.2.

§ 4.1.3 The Owner shall establish and periodically update the Owner's budget for the Project, including (1) the budget for the Cost of the Work as defined in Article 7, (2) the Owner's other costs, and (3) reasonable contingencies related to all of these costs. If the Owner significantly increases or decreases the Owner's budget for the Cost of the Work, the Owner shall notify the Construction Manager and Architect. The Owner and the Architect,

AIA Document A133 – 2019. Copyright © 1991, 2003, 2009, and 2019. All rights reserved. "The American Institute of Architects," "American Institute of Architects," "AIA," the AIA Logo, and "AIA Contract Documents" are trademarks of The American Institute of Architects. This document was produced at 17:56:15 CST on 11/09/2026 under Subscription No.20240070886 which expires on 10/15/2027, is not for resale, is licensed for one-time use only, and may only be used in accordance with the AIA Contract Documents® Terms of Service. To report copyright violations, e-mail docinfo@aiacontracts.com.
User Notes: (6af25d5fd86fb4f88b5459cc)

in consultation with the Construction Manager, shall thereafter agree to a corresponding change in the Project's scope and quality.

§ 4.1.4 Structural and Environmental Tests, Surveys and Reports. During the Preconstruction Phase, the Owner shall furnish the following information or services with reasonable promptness. The Owner shall also furnish any other information or services under the Owner's control and relevant to the Construction Manager's performance of the Work with reasonable promptness after receiving the Construction Manager's written request for such information or services. The Construction Manager shall be entitled to rely on the accuracy of information and services furnished by the Owner but shall exercise proper precautions relating to the safe performance of the Work.

§ 4.1.4.1 The Owner shall furnish tests, inspections, and reports, required by law and as otherwise agreed to by the parties, such as structural, mechanical, and chemical tests, tests for air and water pollution, and tests for hazardous materials.

§ 4.1.4.2 The Owner shall furnish surveys describing physical characteristics, legal limitations and utility locations for the site of the Project, and a written legal description of the site. The surveys and legal information shall include, as applicable, grades and lines of streets, alleys, pavements and adjoining property and structures; designated wetlands; adjacent drainage; rights-of-way, restrictions, easements, encroachments, zoning, deed restrictions, boundaries and contours of the site; locations, dimensions and other necessary data with respect to existing buildings, other improvements and trees; and information concerning available utility services and lines, both public and private, above and below grade, including inverts and depths. All the information on the survey shall be referenced to a Project benchmark.

§ 4.1.4.3 The Owner, when such services are requested, shall furnish services of geotechnical engineers, which may include test borings, test pits, determinations of soil bearing values, percolation tests, evaluations of hazardous materials, seismic evaluation, ground corrosion tests and resistivity tests, including necessary operations for anticipating subsoil conditions, with written reports and appropriate recommendations.

§ 4.1.5 During the Construction Phase, the Owner shall furnish information or services required of the Owner by the Contract Documents with reasonable promptness. The Owner shall also furnish any other information or services under the Owner's control and relevant to the Construction Manager's performance of the Work with reasonable promptness after receiving the Construction Manager's written request for such information or services.

§ 4.1.6 If the Owner identified a Sustainable Objective in Article 1, the Owner shall fulfill its responsibilities as required in AIA Document E234™–2019, Sustainable Projects Exhibit, Construction Manager as Constructor Edition, attached to this Agreement.

§ 4.2 Owner's Designated Representative

The Owner shall identify a representative authorized to act on behalf of the Owner with respect to the Project. The Owner's representative shall render decisions promptly and furnish information expeditiously, so as to avoid unreasonable delay in the services or Work of the Construction Manager. Except as otherwise provided in Section 4.2.1 of A201–2017, the Architect does not have such authority. The term "Owner" means the Owner or the Owner's authorized representative.

§ 4.2.1 Legal Requirements. The Owner shall furnish all legal, insurance and accounting services, including auditing services, that may be reasonably necessary at any time for the Project to meet the Owner's needs and interests.

§ 4.3 Architect

The Owner shall retain an Architect to provide services, duties and responsibilities as described in AIA Document B133™–2019, Standard Form of Agreement Between Owner and Architect, Construction Manager as Constructor Edition, including any additional services requested by the Construction Manager that are necessary for the Preconstruction and Construction Phase services under this Agreement. The Owner shall provide the Construction Manager with a copy of the scope of services in the executed agreement between the Owner and the Architect, and any further modifications to the Architect's scope of services in the agreement.

AIA Document A133 – 2019. Copyright © 1991, 2003, 2009, and 2019. All rights reserved. "The American Institute of Architects," "American Institute of Architects," "AIA," the AIA Logo, and "AIA Contract Documents" are trademarks of The American Institute of Architects. This document was produced at 17:56:15 CST on 11/09/2026 under Subscription No.20240070886 which expires on 10/15/2027, is not for resale, is licensed for one-time use only, and may only be used in accordance with the AIA Contract Documents® Terms of Service. To report copyright violations, e-mail docinfo@aiacontracts.com.
User Notes: (6af25d5fd86fb4f88b5459cc)

ARTICLE 5 COMPENSATION AND PAYMENTS FOR PRECONSTRUCTION PHASE SERVICES

§ 5.1 Compensation

§ 5.1.1 For the Construction Manager's Preconstruction Phase services described in Sections 3.1 and 3.2, the Owner shall compensate the Construction Manager as follows:
(Insert amount of, or basis for, compensation and include a list of reimbursable cost items, as applicable.)

Twenty-Five Thousand ($25,000.00)

§ 5.1.2 The hourly billing rates for Preconstruction Phase services of the Construction Manager and the Construction Manager's Consultants and Subcontractors, if any, are set forth below.
(If applicable, attach an exhibit of hourly billing rates or insert them below.)

N/A

§ 5.1.2.1 Hourly billing rates for Preconstruction Phase services include all costs to be paid or incurred by the Construction Manager, as required by law or collective bargaining agreements, for taxes, insurance, contributions, assessments and benefits and, for personnel not covered by collective bargaining agreements, customary benefits such as sick leave, medical and health benefits, holidays, vacations and pensions, and shall remain unchanged unless the parties execute a Modification.

§ 5.1.3 If the Preconstruction Phase services covered by this Agreement have not been completed within N/A (N/A) months of the date of this Agreement, through no fault of the Construction Manager, the Construction Manager's compensation for Preconstruction Phase services shall be equitably adjusted.

§ 5.2 Payments

§ 5.2.1 Unless otherwise agreed, payments for services shall be made monthly in proportion to services performed.

§ 5.2.2 Payments are due and payable upon presentation of the Construction Manager's invoice. Amounts unpaid N/A (N/A) days after the invoice date shall bear interest at the rate entered below, or in the absence thereof at the legal rate prevailing from time to time at the principal place of business of the Construction Manager.
(Insert rate of monthly or annual interest agreed upon.)

N/A % N/A

ARTICLE 6 COMPENSATION FOR CONSTRUCTION PHASE SERVICES

§ 6.1 Contract Sum

§ 6.1.1 The Owner shall pay the Construction Manager the Contract Sum in current funds for the Construction Manager's performance of the Contract after execution of the Guaranteed Maximum Price Amendment. The Contract Sum is the Cost of the Work as defined in Article 7 plus the Construction Manager's Fee.

§ 6.1.2 The Construction Manager's Fee:
(State a lump sum, percentage of Cost of the Work or other provision for determining the Construction Manager's Fee.)

The Construction Manager's Fee shall be 2.25% of the GMP.

The Overhead Fee shall be a lump sum amount of $1,364,646.00 to include project management staff, field project office, office furniture, copy machine/paper, personal computers, office supplies, telephone/data/internet/fax service, vehicle allowance for field staff, postage/shipping/courier service and mobile phones.

Builder's Risk Insurance

0.16% of the GMP.

AIA Document A133 – 2019. Copyright © 1991, 2003, 2009, and 2019. All rights reserved. "The American Institute of Architects," "American Institute of Architects," "AIA," the AIA Logo, and "AIA Contract Documents" are trademarks of The American Institute of Architects. This document was produced at 17:56:15 CST on 11/09/2026 under Subscription No.20240070886 which expires on 10/15/2027, is not for resale, is licensed for one-time use only, and may only be used in accordance with the AIA Contract Documents® Terms of Service. To report copyright violations, e-mail docinfo@aiacontracts.com.
User Notes: (6af25d5fd86fb4f88b5459cc)

General/Umbrella Liability Insurance

0.60% of the GMP.
Maintenance, Payment, and Performance Bonds

0.93% of the GMP.
Subcontractor Default Insurance

1.65% of Enrolled Subcontractors/Suppliers

§ 6.1.3 The method of adjustment of the Construction Manager's Fee for changes in the Work:

Only by agreement of Owner's City Council.

§ 6.1.4 Limitations, if any, on a Subcontractor's overhead and profit for increases in the cost of its portion of the Work:

10% Overhead and 5% Profit

§ 6.1.5 Rental rates for Construction Manager-owned equipment shall not exceed one-hundred percent (100.00 %) of the standard rental rate paid at the place of the Project.

§ 6.1.6 Liquidated damages, if any:
(Insert terms and conditions for liquidated damages, if any.)

Not Applicable

§ 6.1.7 Other:
(Insert provisions for bonus, cost savings or other incentives, if any, that might result in a change to the Contract Sum.)

The Construction Manager shall not participate in savings to the cost of work. Any savings incurred through cost of work shall be recognized through a credit to the GMP.

§ 6.2 Guaranteed Maximum Price

The Construction Manager guarantees that the Contract Sum shall not exceed the Guaranteed Maximum Price set forth in the Guaranteed Maximum Price Amendment, subject to additions and deductions by Change Order as provided in the Contract Documents. Costs which would cause the Guaranteed Maximum Price to be exceeded shall be paid by the Construction Manager without reimbursement by the Owner.

§ 6.3 Changes in the Work

§ 6.3.1 The Owner may, without invalidating the Contract, order changes in the Work within the general scope of the Contract consisting of additions, deletions or other revisions. The Owner shall issue such changes in writing. The Construction Manager may be entitled to an equitable adjustment in the Contract Time as a result of changes in the Work.

§ 6.3.1.1 The Architect may order minor changes in the Work as provided in Article 7 of AIA Document A201–2017, General Conditions of the Contract for Construction.

§ 6.3.2 Adjustments to the Guaranteed Maximum Price on account of changes in the Work subsequent to the execution of the Guaranteed Maximum Price Amendment may be determined by any of the methods listed in Article 7 of AIA Document A201–2017, General Conditions of the Contract for Construction.

AIA Document A133 – 2019. Copyright © 1991, 2003, 2009, and 2019. All rights reserved. "The American Institute of Architects," "American Institute of Architects," "AIA," the AIA Logo, and "AIA Contract Documents" are trademarks of The American Institute of Architects. This document was produced at 17:56:15 CST on 11/09/2026 under Subscription No.20240070886 which expires on 10/15/2027, is not for resale, is licensed for one-time use only, and may only be used in accordance with the AIA Contract Documents® Terms of Service. To report copyright violations, e-mail docinfo@aiacontracts.com.
User Notes: (6af25d5fd86fb4f88b5459cc)

§ 6.3.3 Adjustments to subcontracts awarded on the basis of a stipulated sum shall be determined in accordance with Article 7 of A201–2017, as they refer to "cost" and "fee," and not by Articles 6 and 7 of this Agreement. Adjustments to subcontracts awarded with the Owner's prior written consent on the basis of cost plus a fee shall be calculated in accordance with the terms of those subcontracts.

§ 6.3.4 In calculating adjustments to the Guaranteed Maximum Price, the terms "cost" and "costs" as used in Article 7 of AIA Document A201–2017 shall mean the Cost of the Work as defined in Article 7 of this Agreement and the term "fee" shall mean the Construction Manager's Fee as defined in Section 6.1.2 of this Agreement.

§ 6.3.5 If no specific provision is made in Section 6.1.3 for adjustment of the Construction Manager's Fee in the case of changes in the Work, or if the extent of such changes is such, in the aggregate, that application of the adjustment provisions of Section 6.1.3 will cause substantial inequity to the Owner or Construction Manager, the Construction Manager's Fee shall be equitably adjusted on the same basis that was used to establish the Fee for the original Work, and the Guaranteed Maximum Price shall be adjusted accordingly.

ARTICLE 7 COST OF THE WORK FOR CONSTRUCTION PHASE

§ 7.1 Costs to Be Reimbursed

§ 7.1.1 The term Cost of the Work shall mean costs necessarily incurred by the Construction Manager in the proper performance of the Work. The Cost of the Work shall include only the items set forth in Sections 7.1 through 7.7.

§ 7.1.2 Where, pursuant to the Contract Documents, any cost is subject to the Owner's prior approval, the Construction Manager shall obtain such approval in writing prior to incurring the cost.

§ 7.1.3 Costs shall be at rates not higher than the standard rates paid at the place of the Project, except with prior approval of the Owner.

§ 7.2 Labor Costs

§ 7.2.1 Wages or salaries of construction workers directly employed by the Construction Manager to perform the construction of the Work at the site or, with the Owner's prior approval, at off-site workshops.

§ 7.2.2 Wages or salaries of the Construction Manager's supervisory and administrative personnel when stationed at the site and performing Work, with the Owner's prior approval.

§ 7.2.2.1 Wages or salaries of the Construction Manager's supervisory and administrative personnel when performing Work and stationed at a location other than the site, but only for that portion of time required for the Work, and limited to the personnel and activities listed below:
(Identify the personnel, type of activity and, if applicable, any agreed upon percentage of time to be devoted to the Work.)

N/A

§ 7.2.3 Wages and salaries of the Construction Manager's supervisory or administrative personnel engaged at factories, workshops or while traveling, in expediting the production or transportation of materials or equipment required for the Work, but only for that portion of their time required for the Work.

§ 7.2.4 Costs paid or incurred by the Construction Manager, as required by law or collective bargaining agreements, for taxes, insurance, contributions, assessments and benefits and, for personnel not covered by collective bargaining agreements, customary benefits such as sick leave, medical and health benefits, holidays, vacations and pensions, provided such costs are based on wages and salaries included in the Cost of the Work under Sections 7.2.1 through 7.2.3.

§ 7.2.5 If agreed rates for labor costs, in lieu of actual costs, are provided in this Agreement, the rates shall remain unchanged throughout the duration of this Agreement, unless the parties execute a Modification.

AIA Document A133 – 2019. Copyright © 1991, 2003, 2009, and 2019. All rights reserved. "The American Institute of Architects," "American Institute of Architects," "AIA," the AIA Logo, and "AIA Contract Documents" are trademarks of The American Institute of Architects. This document was produced at 17:56:15 CST on 11/09/2026 under Subscription No.20240070886 which expires on 10/15/2027, is not for resale, is licensed for one-time use only, and may only be used in accordance with the AIA Contract Documents® Terms of Service. To report copyright violations, e-mail docinfo@aiacontracts.com.
User Notes: (6af25d5fd86fb4f88b5459cc)

§ 7.3 Subcontract Costs
Payments made by the Construction Manager to Subcontractors in accordance with the requirements of the subcontracts and this Agreement.

§ 7.4 Costs of Materials and Equipment Incorporated in the Completed Construction
§ 7.4.1 Costs, including transportation and storage at the site, of materials and equipment incorporated, or to be incorporated, in the completed construction.

§ 7.4.2 Costs of materials described in the preceding Section 7.4.1 in excess of those actually installed to allow for reasonable waste and spoilage. Unused excess materials, if any, shall become the Owner's property at the completion of the Work or, at the Owner's option, shall be sold by the Construction Manager. Any amounts realized from such sales shall be credited to the Owner as a deduction from the Cost of the Work.

§ 7.5 Costs of Other Materials and Equipment, Temporary Facilities and Related Items
§ 7.5.1 Costs of transportation, storage, installation, dismantling, maintenance, and removal of materials, supplies, temporary facilities, machinery, equipment and hand tools not customarily owned by construction workers that are provided by the Construction Manager at the site and fully consumed in the performance of the Work. Costs of materials, supplies, temporary facilities, machinery, equipment, and tools, that are not fully consumed, shall be based on the cost or value of the item at the time it is first used on the Project site less the value of the item when it is no longer used at the Project site. Costs for items not fully consumed by the Construction Manager shall mean fair market value.

§ 7.5.2 Rental charges for temporary facilities, machinery, equipment, and hand tools not customarily owned by construction workers that are provided by the Construction Manager at the site, and the costs of transportation, installation, dismantling, minor repairs, and removal of such temporary facilities, machinery, equipment, and hand tools. Rates and quantities of equipment owned by the Construction Manager, or a related party as defined in Section 7.8, shall be subject to the Owner's prior approval. The total rental cost of any such equipment may not exceed the purchase price of any comparable item.

§ 7.5.3 Costs of removal of debris from the site of the Work and its proper and legal disposal.

§ 7.5.4 Costs of the Construction Manager's site office, including general office equipment and supplies.

§ 7.5.5 Costs of materials and equipment suitably stored off the site at a mutually acceptable location, subject to the Owner's prior approval.

§ 7.6 Miscellaneous Costs
§ 7.6.1 Premiums for that portion of insurance and bonds required by the Contract Documents that can be directly attributed to this Contract.

§ 7.6.1.1 Costs for self-insurance, for either full or partial amounts of the coverages required by the Contract Documents, with the Owner's prior approval.

§ 7.6.1.2 Costs for insurance through a captive insurer owned or controlled by the Construction Manager, with the Owner's prior approval.

§ 7.6.2 Sales, use, or similar taxes, imposed by a governmental authority, that are related to the Work and for which the Construction Manager is liable.

§ 7.6.3 Fees and assessments for the building permit, and for other permits, licenses, and inspections, for which the Construction Manager is required by the Contract Documents to pay.

§ 7.6.4 Fees of laboratories for tests required by the Contract Documents; except those related to defective or nonconforming Work for which reimbursement is excluded under Article 13 of AIA Document A201–2017 or by other provisions of the Contract Documents, and which do not fall within the scope of Section 7.7.3.

AIA Document A133 – 2019. Copyright © 1991, 2003, 2009, and 2019. All rights reserved. "The American Institute of Architects," "American Institute of Architects," "AIA," the AIA Logo, and "AIA Contract Documents" are trademarks of The American Institute of Architects. This document was produced at 17:56:15 CST on 11/09/2026 under Subscription No.20240070886 which expires on 10/15/2027, is not for resale, is licensed for one-time use only, and may only be used in accordance with the AIA Contract Documents® Terms of Service. To report copyright violations, e-mail docinfo@aiacontracts.com.
User Notes: (6af25d5fd86fb4f88b5459cc)

§ 7.6.5 Royalties and license fees paid for the use of a particular design, process, or product, required by the Contract Documents.

§ 7.6.5.1 The cost of defending suits or claims for infringement of patent rights arising from requirements of the Contract Documents, payments made in accordance with legal judgments against the Construction Manager resulting from such suits or claims, and payments of settlements made with the Owner's consent, unless the Construction Manager had reason to believe that the required design, process, or product was an infringement of a copyright or a patent, and the Construction Manager failed to promptly furnish such information to the Architect as required by Article 3 of AIA Document A201–2017. The costs of legal defenses, judgments, and settlements shall not be included in the Cost of the Work used to calculate the Construction Manager's Fee or subject to the Guaranteed Maximum Price.

§ 7.6.6 Costs for communications services, electronic equipment, and software, directly related to the Work and located at the site, with the Owner's prior approval.

§ 7.6.7 Costs of document reproductions and delivery charges.

§ 7.6.8 Deposits lost for causes other than the Construction Manager's negligence or failure to fulfill a specific responsibility in the Contract Documents.

§ 7.6.9 Legal, mediation and arbitration costs, including attorneys' fees, other than those arising from disputes between the Owner and Construction Manager, reasonably incurred by the Construction Manager after the execution of this Agreement in the performance of the Work and with the Owner's prior approval, which shall not be unreasonably withheld.

§ 7.6.10 Expenses incurred in accordance with the Construction Manager's standard written personnel policy for relocation and temporary living allowances of the Construction Manager's personnel required for the Work, with the Owner's prior approval.

§ 7.6.11 That portion of the reasonable expenses of the Construction Manager's supervisory or administrative personnel incurred while traveling in discharge of duties connected with the Work.

§ 7.7 Other Costs and Emergencies

§ 7.7.1 Other costs incurred in the performance of the Work, with the Owner's prior approval.

§ 7.7.2 Costs incurred in taking action to prevent threatened damage, injury, or loss, in case of an emergency affecting the safety of persons and property, as provided in Article 10 of AIA Document A201–2017.

§ 7.7.3 Costs of repairing or correcting damaged or nonconforming Work executed by the Construction Manager, Subcontractors, or suppliers, provided that such damaged or nonconforming Work was not caused by the negligence of, or failure to fulfill a specific responsibility by, the Construction Manager, and only to the extent that the cost of repair or correction is not recovered by the Construction Manager from insurance, sureties, Subcontractors, suppliers, or others.

§ 7.7.4 The costs described in Sections 7.1 through 7.7 shall be included in the Cost of the Work, notwithstanding any provision of AIA Document A201–2017 or other Conditions of the Contract which may require the Construction Manager to pay such costs, unless such costs are excluded by the provisions of Section 7.9.

§ 7.8 Related Party Transactions

§ 7.8.1 For purposes of this Section 7.8, the term "related party" shall mean (1) a parent, subsidiary, affiliate, or other entity having common ownership of, or sharing common management with, the Construction Manager; (2) any entity in which any stockholder in, or management employee of, the Construction Manager holds an equity interest in excess of ten percent in the aggregate; (3) any entity which has the right to control the business or affairs of the

AIA Document A133 – 2019. Copyright © 1991, 2003, 2009, and 2019. All rights reserved. "The American Institute of Architects," "American Institute of Architects," "AIA," the AIA Logo, and "AIA Contract Documents" are trademarks of The American Institute of Architects. This document was produced at 17:56:15 CST on 11/09/2026 under Subscription No.20240070886 which expires on 10/15/2027, is not for resale, is licensed for one-time use only, and may only be used in accordance with the AIA Contract Documents® Terms of Service. To report copyright violations, e-mail docinfo@aiacontracts.com.
User Notes: (6af25d5fd86fb4f88b5459cc)

Construction Manager; or (4) any person, or any member of the immediate family of any person, who has the right to control the business or affairs of the Construction Manager.

§ 7.8.2 If any of the costs to be reimbursed arise from a transaction between the Construction Manager and a related party, the Construction Manager shall notify the Owner of the specific nature of the contemplated transaction, including the identity of the related party and the anticipated cost to be incurred, before any such transaction is consummated or cost incurred. If the Owner, after such notification, authorizes the proposed transaction in writing, then the cost incurred shall be included as a cost to be reimbursed, and the Construction Manager shall procure the Work, equipment, goods, or service, from the related party, as a Subcontractor, according to the terms of Article 9. If the Owner fails to authorize the transaction in writing, the Construction Manager shall procure the Work, equipment, goods, or service from some person or entity other than a related party according to the terms of Article 9.

§ 7.9 Costs Not To Be Reimbursed

§ 7.9.1 The Cost of the Work shall not include the items listed below:

- **.1** Salaries and other compensation of the Construction Manager's personnel stationed at the Construction Manager's principal office or offices other than the site office, except as specifically provided in Section 7.2, or as may be provided in Article 14;
- **.2** Bonuses, profit sharing, incentive compensation, and any other discretionary payments, paid to anyone hired by the Construction Manager or paid to any Subcontractor or vendor, unless the Owner has provided prior approval;
- **.3** Expenses of the Construction Manager's principal office and offices other than the site office;
- **.4** Overhead and general expenses, except as may be expressly included in Sections 7.1 to 7.7;
- **.5** The Construction Manager's capital expenses, including interest on the Construction Manager's capital employed for the Work;
- **.6** Except as provided in Section 7.7.3 of this Agreement, costs due to the negligence of, or failure to fulfill a specific responsibility of the Contract by, the Construction Manager, Subcontractors, and suppliers, or anyone directly or indirectly employed by any of them or for whose acts any of them may be liable;
- **.7** Any cost not specifically and expressly described in Sections 7.1 to 7.7;
- **.8** Costs, other than costs included in Change Orders approved by the Owner, that would cause the Guaranteed Maximum Price to be exceeded; and
- **.9** Costs for services incurred during the Preconstruction Phase.

ARTICLE 8 DISCOUNTS, REBATES, AND REFUNDS

§ 8.1 Cash discounts obtained on payments made by the Construction Manager shall accrue to the Owner if (1) before making the payment, the Construction Manager included the amount to be paid, less such discount, in an Application for Payment and received payment from the Owner, or (2) the Owner has deposited funds with the Construction Manager with which to make payments; otherwise, cash discounts shall accrue to the Construction Manager. Trade discounts, rebates, refunds, and amounts received from sales of surplus materials and equipment shall accrue to the Owner, and the Construction Manager shall make provisions so that they can be obtained.

§ 8.2 Amounts that accrue to the Owner in accordance with the provisions of Section 8.1 shall be credited to the Owner as a deduction from the Cost of the Work.

ARTICLE 9 SUBCONTRACTS AND OTHER AGREEMENTS

§ 9.1 Those portions of the Work that the Construction Manager does not customarily perform with the Construction Manager's own personnel shall be performed under subcontracts or other appropriate agreements with the Construction Manager. The Owner may designate specific persons from whom, or entities from which, the Construction Manager shall obtain bids. The Construction Manager shall obtain bids from Subcontractors, and from suppliers of materials or equipment fabricated especially for the Work, who are qualified to perform that portion of the Work in accordance with the requirements of the Contract Documents. The Construction Manager shall deliver such bids to the Architect and Owner with an indication as to which bids the Construction Manager intends to accept. The Owner then has the right to review the Construction Manager's list of proposed subcontractors and suppliers in consultation with the Architect and, subject to Section 9.1.1, to object to any subcontractor or supplier.

AIA Document A133 – 2019. Copyright © 1991, 2003, 2009, and 2019. All rights reserved. "The American Institute of Architects," "American Institute of Architects," "AIA," the AIA Logo, and "AIA Contract Documents" are trademarks of The American Institute of Architects. This document was produced at 17:56:15 CST on 11/09/2026 under Subscription No.20240070886 which expires on 10/15/2027, is not for resale, is licensed for one-time use only, and may only be used in accordance with the AIA Contract Documents® Terms of Service. To report copyright violations, e-mail docinfo@aiacontracts.com.
User Notes: (6af25d5fd86fb4f88b5459cc)

Any advice of the Architect, or approval or objection by the Owner, shall not relieve the Construction Manager of its responsibility to perform the Work in accordance with the Contract Documents. The Construction Manager shall not be required to contract with anyone to whom the Construction Manager has reasonable objection.

§ 9.1.1 When a specific subcontractor or supplier (1) is recommended to the Owner by the Construction Manager; (2) is qualified to perform that portion of the Work; and (3) has submitted a bid that conforms to the requirements of the Contract Documents without reservations or exceptions, but the Owner requires that another bid be accepted, then the Construction Manager may require that a Change Order be issued to adjust the Guaranteed Maximum Price by the difference between the bid of the person or entity recommended to the Owner by the Construction Manager and the amount of the subcontract or other agreement actually signed with the person or entity designated by the Owner.

§ 9.2 Subcontracts or other agreements shall conform to the applicable payment provisions of this Agreement, and shall not be awarded on the basis of cost plus a fee without the Owner's prior written approval. If a subcontract is awarded on the basis of cost plus a fee, the Construction Manager shall provide in the subcontract for the Owner to receive the same audit rights with regard to the Subcontractor as the Owner receives with regard to the Construction Manager in Article 10.

ARTICLE 10 ACCOUNTING RECORDS

The Construction Manager shall keep full and detailed records and accounts related to the Cost of the Work, and exercise such controls, as may be necessary for proper financial management under this Contract and to substantiate all costs incurred. The accounting and control systems shall be satisfactory to the Owner. The Owner and the Owner's auditors shall, during regular business hours and upon reasonable notice, be afforded access to, and shall be permitted to audit and copy, the Construction Manager's records and accounts, including complete documentation supporting accounting entries, books, job cost reports, correspondence, instructions, drawings, receipts, subcontracts, Subcontractor's proposals, Subcontractor's invoices, purchase orders, vouchers, memoranda, and other data relating to this Contract. The Construction Manager shall preserve these records for a period of three years after final payment, or for such longer period as may be required by law.

ARTICLE 11 PAYMENTS FOR CONSTRUCTION PHASE SERVICES

§ 11.1 Progress Payments

§ 11.1.1 Based upon Applications for Payment submitted to the Architect by the Construction Manager, and Certificates for Payment issued by the Architect, the Owner shall make progress payments on account of the Contract Sum, to the Construction Manager, as provided below and elsewhere in the Contract Documents.

§ 11.1.2 The period covered by each Application for Payment shall be one calendar month ending on the last day of the month, or as follows:

§ 11.1.3 Provided that an Application for Payment is received by the Architect not later than the last day of a month, the Owner shall make payment of the amount certified to the Construction Manager not later than the last day of the following month. If an Application for Payment is received by the Architect after the application date fixed above, payment of the amount certified shall be made by the Owner not later than thirty (30) days after the Architect receives the Application for Payment.
(Federal, state or local laws may require payment within a certain period of time.)

§ 11.1.4 With each Application for Payment, the Construction Manager shall submit payrolls, petty cash accounts, receipted invoices or invoices with check vouchers attached, and any other evidence required by the Owner or Architect to demonstrate that payments already made by the Construction Manager on account of the Cost of the Work equal or exceed progress payments already received by the Construction Manager, plus payrolls for the period covered by the present Application for Payment, less that portion of the progress payments attributable to the Construction Manager's Fee.

§ 11.1.5 Each Application for Payment shall be based on the most recent schedule of values submitted by the Construction Manager in accordance with the Contract Documents. The schedule of values shall allocate the entire Guaranteed Maximum Price among: (1) the various portions of the Work; (2) any contingency for costs that are

AIA Document A133 – 2019. Copyright © 1991, 2003, 2009, and 2019. All rights reserved. "The American Institute of Architects," "American Institute of Architects," "AIA," the AIA Logo, and "AIA Contract Documents" are trademarks of The American Institute of Architects. This document was produced at 17:56:15 CST on 11/09/2026 under Subscription No.20240070886 which expires on 10/15/2027, is not for resale, is licensed for one-time use only, and may only be used in accordance with the AIA Contract Documents® Terms of Service. To report copyright violations, e-mail docinfo@aiacontracts.com.
User Notes: (6af25d5fd86fb4f88b5459cc)

included in the Guaranteed Maximum Price but not otherwise allocated to another line item or included in a Change Order; and (3) the Construction Manager's Fee.

§ 11.1.5.1 The schedule of values shall be prepared in such form and supported by such data to substantiate its accuracy as the Architect may require. The schedule of values shall be used as a basis for reviewing the Construction Manager's Applications for Payment.

§ 11.1.5.2 The allocation of the Guaranteed Maximum Price under this Section 11.1.5 shall not constitute a separate guaranteed maximum price for the Cost of the Work of each individual line item in the schedule of values.

§ 11.1.5.3 When the Construction Manager allocates costs from a contingency to another line item in the schedule of values, the Construction Manager shall submit supporting documentation to the Architect.

§ 11.1.6 Applications for Payment shall show the percentage of completion of each portion of the Work as of the end of the period covered by the Application for Payment. The percentage of completion shall be the lesser of (1) the percentage of that portion of the Work which has actually been completed, or (2) the percentage obtained by dividing (a) the expense that has actually been incurred by the Construction Manager on account of that portion of the Work and for which the Construction Manager has made payment or intends to make payment prior to the next Application for Payment, by (b) the share of the Guaranteed Maximum Price allocated to that portion of the Work in the schedule of values.

§ 11.1.7 In accordance with AIA Document A201–2017 and subject to other provisions of the Contract Documents, the amount of each progress payment shall be computed as follows:

§ 11.1.7.1 The amount of each progress payment shall first include:

.1 That portion of the Guaranteed Maximum Price properly allocable to completed Work as determined by multiplying the percentage of completion of each portion of the Work by the share of the Guaranteed Maximum Price allocated to that portion of the Work in the most recent schedule of values;

.2 That portion of the Guaranteed Maximum Price properly allocable to materials and equipment delivered and suitably stored at the site for subsequent incorporation in the completed construction or, if approved in writing in advance by the Owner, suitably stored off the site at a location agreed upon in writing;

.3 That portion of Construction Change Directives that the Architect determines, in the Architect's professional judgment, to be reasonably justified; and

.4 The Construction Manager's Fee, computed upon the Cost of the Work described in the preceding Sections 11.1.7.1.1 and 11.1.7.1.2 at the rate stated in Section 6.1.2 or, if the Construction Manager's Fee is stated as a fixed sum in that Section, an amount that bears the same ratio to that fixed-sum fee as the Cost of the Work included in Sections 11.1.7.1.1 and 11.1.7.1.2 bears to a reasonable estimate of the probable Cost of the Work upon its completion.

§ 11.1.7.2 The amount of each progress payment shall then be reduced by:

.1 The aggregate of any amounts previously paid by the Owner;

.2 The amount, if any, for Work that remains uncorrected and for which the Architect has previously withheld a Certificate for Payment as provided in Article 9 of AIA Document A201–2017;

.3 Any amount for which the Construction Manager does not intend to pay a Subcontractor or material supplier, unless the Work has been performed by others the Construction Manager intends to pay;

.4 For Work performed or defects discovered since the last payment application, any amount for which the Architect may withhold payment, or nullify a Certificate of Payment in whole or in part, as provided in Article 9 of AIA Document A201–2017;

.5 The shortfall, if any, indicated by the Construction Manager in the documentation required by Section 11.1.4 to substantiate prior Applications for Payment, or resulting from errors subsequently discovered by the Owner's auditors in such documentation; and

.6 Retainage withheld pursuant to Section 11.1.8.

AIA Document A133 – 2019. Copyright © 1991, 2003, 2009, and 2019. All rights reserved. "The American Institute of Architects," "American Institute of Architects," "AIA," the AIA Logo, and "AIA Contract Documents" are trademarks of The American Institute of Architects. This document was produced at 17:56:15 CST on 11/09/2026 under Subscription No.20240070886 which expires on 10/15/2027, is not for resale, is licensed for one-time use only, and may only be used in accordance with the AIA Contract Documents® Terms of Service. To report copyright violations, e-mail docinfo@aiacontracts.com.
User Notes: (6af25d5fd86fb4f88b5459cc)

§ 11.1.8 Retainage

§ 11.1.8.1 For each progress payment made prior to Substantial Completion of the Work, the Owner may withhold the following amount, as retainage, from the payment otherwise due:
(Insert a percentage or amount to be withheld as retainage from each Application for Payment. The amount of retainage may be limited by governing law.)

Five Percent (5.00%)

§ 11.1.8.1.1 The following items are not subject to retainage:
(Insert any items not subject to the withholding of retainage, such as general conditions, insurance, etc.)

N/A

§ 11.1.8.2 Reduction or limitation of retainage, if any, shall be as follows:
(If the retainage established in Section 11.1.8.1 is to be modified prior to Substantial Completion of the entire Work, insert provisions for such modification.)

N/A

§ 11.1.8.3 Except as set forth in this Section 11.1.8.3, upon Substantial Completion of the Work, the Construction Manager may submit an Application for Payment that includes the retainage withheld from prior Applications for Payment pursuant to this Section 11.1.8. The Application for Payment submitted at Substantial Completion shall not include retainage as follows:
(Insert any other conditions for release of retainage, such as upon completion of the Owner's audit and reconciliation, upon Substantial Completion.)

N/A

§ 11.1.9 If final completion of the Work is materially delayed through no fault of the Construction Manager, the Owner shall pay the Construction Manager any additional amounts in accordance with Article 9 of AIA Document A201–2017.

§ 11.1.10 Except with the Owner's prior written approval, the Construction Manager shall not make advance payments to suppliers for materials or equipment which have not been delivered and suitably stored at the site.

§ 11.1.11 The Owner and the Construction Manager shall agree upon a mutually acceptable procedure for review and approval of payments to Subcontractors, and the percentage of retainage held on Subcontracts, and the Construction Manager shall execute subcontracts in accordance with those agreements.

§ 11.1.12 In taking action on the Construction Manager's Applications for Payment the Architect shall be entitled to rely on the accuracy and completeness of the information furnished by the Construction Manager, and such action shall not be deemed to be a representation that (1) the Architect has made a detailed examination, audit, or arithmetic verification, of the documentation submitted in accordance with Section 11.1.4 or other supporting data; (2) that the Architect has made exhaustive or continuous on-site inspections; or (3) that the Architect has made examinations to ascertain how or for what purposes the Construction Manager has used amounts previously paid on account of the Contract. Such examinations, audits, and verifications, if required by the Owner, will be performed by the Owner's auditors acting in the sole interest of the Owner.

§ 11.2 Final Payment

§ 11.2.1 Final payment, constituting the entire unpaid balance of the Contract Sum, shall be made by the Owner to the Construction Manager when

.1 the Construction Manager has fully performed the Contract, except for the Construction Manager's responsibility to correct Work as provided in Article 12 of AIA Document A201–2017, and to satisfy other requirements, if any, which extend beyond final payment;

AIA Document A133 – 2019. Copyright © 1991, 2003, 2009, and 2019. All rights reserved. "The American Institute of Architects," "American Institute of Architects," "AIA," the AIA Logo, and "AIA Contract Documents" are trademarks of The American Institute of Architects. This document was produced at 17:56:15 CST on 11/09/2026 under Subscription No.20240070886 which expires on 10/15/2027, is not for resale, is licensed for one-time use only, and may only be used in accordance with the AIA Contract Documents® Terms of Service. To report copyright violations, e-mail docinfo@aiacontracts.com.
User Notes: (6af25d5fd86fb4f88b5459cc)

.2 the Construction Manager has submitted a final accounting for the Cost of the Work and a final Application for Payment; and

.3 a final Certificate for Payment has been issued by the Architect in accordance with Section 11.2.2.2.

§ 11.2.2 Within 30 days of the Owner's receipt of the Construction Manager's final accounting for the Cost of the Work, the Owner shall conduct an audit of the Cost of the Work or notify the Architect that it will not conduct an audit.

§ 11.2.2.1 If the Owner conducts an audit of the Cost of the Work, the Owner shall, within 10 days after completion of the audit, submit a written report based upon the auditors' findings to the Architect.

§ 11.2.2.2 Within seven days after receipt of the written report described in Section 11.2.2.1, or receipt of notice that the Owner will not conduct an audit, and provided that the other conditions of Section 11.2.1 have been met, the Architect will either issue to the Owner a final Certificate for Payment with a copy to the Construction Manager, or notify the Construction Manager and Owner in writing of the Architect's reasons for withholding a certificate as provided in Article 9 of AIA Document A201–2017. The time periods stated in this Section 11.2.2 supersede those stated in Article 9 of AIA Document A201–2017. The Architect is not responsible for verifying the accuracy of the Construction Manager's final accounting.

§ 11.2.2.3 If the Owner's auditors' report concludes that the Cost of the Work, as substantiated by the Construction Manager's final accounting, is less than claimed by the Construction Manager, the Construction Manager shall be entitled to request mediation of the disputed amount without seeking an initial decision pursuant to Article 15 of AIA Document A201–2017. A request for mediation shall be made by the Construction Manager within 30 days after the Construction Manager's receipt of a copy of the Architect's final Certificate for Payment. Failure to request mediation within this 30-day period shall result in the substantiated amount reported by the Owner's auditors becoming binding on the Construction Manager. Pending a final resolution of the disputed amount, the Owner shall pay the Construction Manager the amount certified in the Architect's final Certificate for Payment.

§ 11.2.3 The Owner's final payment to the Construction Manager shall be made no later than 30 days after the issuance of the Architect's final Certificate for Payment, or as follows:

§ 11.2.4 If, subsequent to final payment, and at the Owner's request, the Construction Manager incurs costs, described in Sections 7.1 through 7.7, and not excluded by Section 7.9, to correct defective or nonconforming Work, the Owner shall reimburse the Construction Manager for such costs, and the Construction Manager's Fee applicable thereto, on the same basis as if such costs had been incurred prior to final payment, but not in excess of the Guaranteed Maximum Price. If adjustments to the Contract Sum are provided for in Section 6.1.7, the amount of those adjustments shall be recalculated, taking into account any reimbursements made pursuant to this Section 11.2.4 in determining the net amount to be paid by the Owner to the Construction Manager.

§ 11.3 Interest

Payments due and unpaid under the Contract shall bear interest from the date payment is due at the rate stated below, or in the absence thereof, at the legal rate prevailing from time to time at the place where the Project is located.
(Insert rate of interest agreed upon, if any.)

0.00 % Zero Percent

ARTICLE 12 DISPUTE RESOLUTION

§ 12.1 Initial Decision Maker

§ 12.1.1 Any Claim between the Owner and Construction Manager shall be resolved in accordance with the provisions set forth in this Article 12 and Article 15 of A201–2017. However, for Claims arising from or relating to the Construction Manager's Preconstruction Phase services, no decision by the Initial Decision Maker shall be

AIA Document A133 – 2019. Copyright © 1991, 2003, 2009, and 2019. All rights reserved. "The American Institute of Architects," "American Institute of Architects," "AIA," the AIA Logo, and "AIA Contract Documents" are trademarks of The American Institute of Architects. This document was produced at 17:56:15 CST on 11/09/2026 under Subscription No.20240070886 which expires on 10/15/2027, is not for resale, is licensed for one-time use only, and may only be used in accordance with the AIA Contract Documents® Terms of Service. To report copyright violations, e-mail docinfo@aiacontracts.com.
User Notes: (6af25d5fd86fb4f88b5459cc)

required as a condition precedent to mediation or binding dispute resolution, and Section 12.1.2 of this Agreement shall not apply.

§ 12.1.2 The Architect will serve as the Initial Decision Maker pursuant to Article 15 of AIA Document A201–2017 for Claims arising from or relating to the Construction Manager's Construction Phase services, unless the parties appoint below another individual, not a party to the Agreement, to serve as the Initial Decision Maker.
(If the parties mutually agree, insert the name, address and other contact information of the Initial Decision Maker, if other than the Architect.)

§ 12.2 Binding Dispute Resolution
For any Claim subject to, but not resolved by mediation pursuant to Article 15 of AIA Document A201–2017, the method of binding dispute resolution shall be as follows:
(Check the appropriate box.)

[ ] Arbitration pursuant to Article 15 of AIA Document A201–2017

[X] Litigation in a court of competent jurisdiction

[ ] Other: *(Specify)*

If the Owner and Construction Manager do not select a method of binding dispute resolution, or do not subsequently agree in writing to a binding dispute resolution method other than litigation, Claims will be resolved by litigation in a court of competent jurisdiction.

ARTICLE 13 TERMINATION OR SUSPENSION

§ 13.1 Termination Prior to Execution of the Guaranteed Maximum Price Amendment

§ 13.1.1 If the Owner and the Construction Manager do not reach an agreement on the Guaranteed Maximum Price, the Owner may terminate this Agreement upon not less than seven days' written notice to the Construction Manager, and the Construction Manager may terminate this Agreement, upon not less than seven days' written notice to the Owner.

§ 13.1.2 In the event of termination of this Agreement pursuant to Section 13.1.1, the Construction Manager shall be compensated for Preconstruction Phase services and Work performed prior to receipt of a notice of termination, in accordance with the terms of this Agreement. In no event shall the Construction Manager's compensation under this Section exceed the compensation set forth in Section 5.1.

§ 13.1.3 Prior to the execution of the Guaranteed Maximum Price Amendment, the Owner may terminate this Agreement upon not less than seven days' written notice to the Construction Manager for the Owner's convenience and without cause, and the Construction Manager may terminate this Agreement, upon not less than seven days' written notice to the Owner, for the reasons set forth in Article 14 of A201–2017.

§ 13.1.4 In the event of termination of this Agreement pursuant to Section 13.1.3, the Construction Manager shall be equitably compensated for Preconstruction Phase services and Work performed prior to receipt of a notice of termination. In no event shall the Construction Manager's compensation under this Section exceed the compensation set forth in Section 5.1.

§ 13.1.5 If the Owner terminates the Contract pursuant to Section 13.1.3 after the commencement of the Construction Phase but prior to the execution of the Guaranteed Maximum Price Amendment, the Owner shall pay to the Construction Manager an amount calculated as follows, which amount shall be in addition to any compensation paid to the Construction Manager under Section 13.1.4:

.1 Take the Cost of the Work incurred by the Construction Manager to the date of termination;

AIA Document A133 – 2019. Copyright © 1991, 2003, 2009, and 2019. All rights reserved. "The American Institute of Architects," "American Institute of Architects," "AIA," the AIA Logo, and "AIA Contract Documents" are trademarks of The American Institute of Architects. This document was produced at 17:56:15 CST on 11/09/2026 under Subscription No.20240070886 which expires on 10/15/2027, is not for resale, is licensed for one-time use only, and may only be used in accordance with the AIA Contract Documents® Terms of Service. To report copyright violations, e-mail docinfo@aiacontracts.com.
User Notes: (6af25d5fd86fb4f88b5459cc)

.2 Add the Construction Manager's Fee computed upon the Cost of the Work to the date of termination at the rate stated in Section 6.1 or, if the Construction Manager's Fee is stated as a fixed sum in that Section, an amount that bears the same ratio to that fixed-sum Fee as the Cost of the Work at the time of termination bears to a reasonable estimate of the probable Cost of the Work upon its completion; and

.3 Subtract the aggregate of previous payments made by the Owner for Construction Phase services.

§ 13.1.6 The Owner shall also pay the Construction Manager fair compensation, either by purchase or rental at the election of the Owner, for any equipment owned by the Construction Manager that the Owner elects to retain and that is not otherwise included in the Cost of the Work under Section 13.1.5.1. To the extent that the Owner elects to take legal assignment of subcontracts and purchase orders (including rental agreements), the Construction Manager shall, as a condition of receiving the payments referred to in this Article 13, execute and deliver all such papers and take all such steps, including the legal assignment of such subcontracts and other contractual rights of the Construction Manager, as the Owner may require for the purpose of fully vesting in the Owner the rights and benefits of the Construction Manager under such subcontracts or purchase orders. All Subcontracts, purchase orders and rental agreements entered into by the Construction Manager will contain provisions allowing for assignment to the Owner as described above.

§ 13.1.6.1 If the Owner accepts assignment of subcontracts, purchase orders or rental agreements as described above, the Owner will reimburse or indemnify the Construction Manager for all costs arising under the subcontract, purchase order or rental agreement, if those costs would have been reimbursable as Cost of the Work if the contract had not been terminated. If the Owner chooses not to accept assignment of any subcontract, purchase order or rental agreement that would have constituted a Cost of the Work had this agreement not been terminated, the Construction Manager will terminate the subcontract, purchase order or rental agreement and the Owner will pay the Construction Manager the costs necessarily incurred by the Construction Manager because of such termination.

§ 13.2 Termination or Suspension Following Execution of the Guaranteed Maximum Price Amendment

§ 13.2.1 Termination

The Contract may be terminated by the Owner or the Construction Manager as provided in Article 14 of AIA Document A201–2017.

§ 13.2.2 Termination by the Owner for Cause

§ 13.2.2.1 If the Owner terminates the Contract for cause as provided in Article 14 of AIA Document A201–2017, the amount, if any, to be paid to the Construction Manager under Article 14 of AIA Document A201–2017 shall not cause the Guaranteed Maximum Price to be exceeded, nor shall it exceed an amount calculated as follows:

.1 Take the Cost of the Work incurred by the Construction Manager to the date of termination;

.2 Add the Construction Manager's Fee, computed upon the Cost of the Work to the date of termination at the rate stated in Section 6.1 or, if the Construction Manager' Fee is stated as a fixed sum in that Section, an amount that bears the same ratio to that fixed-sum Fee as the Cost of the Work at the time of termination bears to a reasonable estimate of the probable Cost of the Work upon its completion;

.3 Subtract the aggregate of previous payments made by the Owner; and

.4 Subtract the costs and damages incurred, or to be incurred, by the Owner under Article 14 of AIA Document A201–2017.

§ 13.2.2.2 The Owner shall also pay the Construction Manager fair compensation, either by purchase or rental at the election of the Owner, for any equipment owned by the Construction Manager that the Owner elects to retain and that is not otherwise included in the Cost of the Work under Section 13.2.2.1.1. To the extent that the Owner elects to take legal assignment of subcontracts and purchase orders (including rental agreements), the Construction Manager shall, as a condition of receiving the payments referred to in this Article 13, execute and deliver all such papers and take all such steps, including the legal assignment of such subcontracts and other contractual rights of the Construction Manager, as the Owner may require for the purpose of fully vesting in the Owner the rights and benefits of the Construction Manager under such subcontracts or purchase orders.

§ 13.2.3 Termination by the Owner for Convenience

AIA Document A133 – 2019. Copyright © 1991, 2003, 2009, and 2019. All rights reserved. "The American Institute of Architects," "American Institute of Architects," "AIA," the AIA Logo, and "AIA Contract Documents" are trademarks of The American Institute of Architects. This document was produced at 17:56:15 CST on 11/09/2026 under Subscription No.20240070886 which expires on 10/15/2027, is not for resale, is licensed for one-time use only, and may only be used in accordance with the AIA Contract Documents® Terms of Service. To report copyright violations, e-mail docinfo@aiacontracts.com.
User Notes: (6af25d5fd86fb4f88b5459cc)

If the Owner terminates the Contract for convenience in accordance with Article 14 of AIA Document A201–2017, then the Owner shall pay the Construction Manager a termination fee as follows:
(Insert the amount of or method for determining the fee, if any, payable to the Construction Manager following a termination for the Owner's convenience.)

Percentage of Construction Manager's fee and general conditions equal to amount of construction completed to date of termination. Owner shall release accumulated retainage to date of termination.

§ 13.3 Suspension
The Work may be suspended by the Owner as provided in Article 14 of AIA Document A201–2017; in such case, the Guaranteed Maximum Price and Contract Time shall be increased as provided in Article 14 of AIA Document A201–2017, except that the term "profit" shall be understood to mean the Construction Manager's Fee as described in Sections 6.1 and 6.3.5 of this Agreement.

ARTICLE 14 MISCELLANEOUS PROVISIONS
§ 14.1 Terms in this Agreement shall have the same meaning as those in A201–2017. Where reference is made in this Agreement to a provision of AIA Document A201–2017 or another Contract Document, the reference refers to that provision as amended or supplemented by other provisions of the Contract Documents.

§ 14.2 Successors and Assigns
§ 14.2.1 The Owner and Construction Manager, respectively, bind themselves, their partners, successors, assigns and legal representatives to covenants, agreements, and obligations contained in the Contract Documents. Except as provided in Section 14.2.2 of this Agreement, and in Section 13.2.2 of A201–2017, neither party to the Contract shall assign the Contract as a whole without written consent of the other. If either party attempts to make an assignment without such consent, that party shall nevertheless remain legally responsible for all obligations under the Contract.

§ 14.2.2 The Owner may, without consent of the Construction Manager, assign the Contract to a lender providing construction financing for the Project, if the lender assumes the Owner's rights and obligations under the Contract Documents. The Construction Manager shall execute all consents reasonably required to facilitate the assignment.

§ 14.3 Insurance and Bonds
§ 14.3.1 Preconstruction Phase
The Construction Manager shall maintain the following insurance for the duration of the Preconstruction Services performed under this Agreement. If any of the requirements set forth below exceed the types and limits the Construction Manager normally maintains, the Owner shall reimburse the Construction Manager for any additional cost.

§ 14.3.1.1 Commercial General Liability with policy limits of not less than two-million dollars and no cents ($ 2,000,000.00) for each occurrence and two million dollars and no cents ($ 2,000,000.00) in the aggregate for bodily injury and property damage.

§ 14.3.1.2 Automobile Liability covering vehicles owned, and non-owned vehicles used, by the Construction Manager with policy limits of not less than one-million dollars and no cents ($ 1,000,000.00) per accident for bodily injury, death of any person, and property damage arising out of the ownership, maintenance and use of those motor vehicles, along with any other statutorily required automobile coverage.

§ 14.3.1.3 The Construction Manager may achieve the required limits and coverage for Commercial General Liability and Automobile Liability through a combination of primary and excess or umbrella liability insurance, provided that such primary and excess or umbrella liability insurance policies result in the same or greater coverage as the coverages required under Sections 14.3.1.1 and 14.3.1.2, and in no event shall any excess or umbrella liability insurance provide narrower coverage than the primary policy. The excess policy shall not require the exhaustion of the underlying limits only through the actual payment by the underlying insurers.

AIA Document A133 – 2019. Copyright © 1991, 2003, 2009, and 2019. All rights reserved. "The American Institute of Architects," "American Institute of Architects," "AIA," the AIA Logo, and "AIA Contract Documents" are trademarks of The American Institute of Architects. This document was produced at 17:56:15 CST on 11/09/2026 under Subscription No.20240070886 which expires on 10/15/2027, is not for resale, is licensed for one-time use only, and may only be used in accordance with the AIA Contract Documents® Terms of Service. To report copyright violations, e-mail docinfo@aiacontracts.com.
User Notes: (6af25d5fd86fb4f88b5459cc)

§ 14.3.1.4 Workers' Compensation at statutory limits and Employers Liability with policy limits not less than one-million dollars and no cents ($ 1,000,000.00) each accident, one-million dollars and no cents ($ 1,000,000.00) each employee, and one-million dollars and no cents ($ 1,000,000.00) policy limit.

§ 14.3.1.5 Professional Liability covering negligent acts, errors and omissions in the performance of professional services, with policy limits of not less than two-million dollars and no cents ($ 2,000,000.00) per claim and four-million dollars and no cents ($ 4,000,000.00) in the aggregate.

§ 14.3.1.6 Other Insurance
(List below any other insurance coverage to be provided by the Construction Manager and any applicable limits.)

Coverage	Limits
Payment and Performance Bond	100% of the total amount of the contract
Subcontract Default Insurance	1.65% of enrolled subcontractor and supplier contracts

§ 14.3.1.7 Additional Insured Obligations. To the fullest extent permitted by law, the Construction Manager shall cause the primary and excess or umbrella polices for Commercial General Liability and Automobile Liability to include the Owner as an additional insured for claims caused in whole or in part by the Construction Manager's negligent acts or omissions. The additional insured coverage shall be primary and non-contributory to any of the Owner's insurance policies and shall apply to both ongoing and completed operations.

§ 14.3.1.8 The Construction Manager shall provide certificates of insurance to the Owner that evidence compliance with the requirements in this Section 14.3.1.

§ 14.3.2 Construction Phase
After execution of the Guaranteed Maximum Price Amendment, the Owner and the Construction Manager shall purchase and maintain insurance as set forth in AIA Document A133™–2019, Standard Form of Agreement Between Owner and Construction Manager as Constructor where the basis of payment is the Cost of the Work Plus a Fee with a Guaranteed Maximum Price, Exhibit B, Insurance and Bonds, and elsewhere in the Contract Documents.

§ 14.3.2.1 The Construction Manager shall provide bonds as set forth in AIA Document A133™–2019 Exhibit B, and elsewhere in the Contract Documents.

§ 14.4 Notice in electronic format, pursuant to Article 1 of AIA Document A201–2017, may be given in accordance with AIA Document E203™–2013, Building Information Modeling and Digital Data Exhibit, if completed, or as otherwise set forth below:
(If other than in accordance with AIA Document E203–2013, insert requirements for delivering notice in electronic format such as name, title, and email address of the recipient and whether and how the system will be required to generate a read receipt for the transmission.)

§ 14.5 Other provisions:

ARTICLE 15 SCOPE OF THE AGREEMENT
§ 15.1 This Agreement represents the entire and integrated agreement between the Owner and the Construction Manager and supersedes all prior negotiations, representations or agreements, either written or oral. This Agreement may be amended only by written instrument signed by both Owner and Construction Manager.

§ 15.2 The following documents comprise the Agreement:

AIA Document A133 – 2019. Copyright © 1991, 2003, 2009, and 2019. All rights reserved. "The American Institute of Architects," "American Institute of Architects," "AIA," the AIA Logo, and "AIA Contract Documents" are trademarks of The American Institute of Architects. This document was produced at 17:56:15 CST on 11/09/2026 under Subscription No.20240070886 which expires on 10/15/2027, is not for resale, is licensed for one-time use only, and may only be used in accordance with the AIA Contract Documents® Terms of Service. To report copyright violations, e-mail docinfo@aiacontracts.com.
User Notes: (6af25d5fd86fb4f88b5459cc)

.1 AIA Document A133™–2019, Standard Form of Agreement Between Owner and Construction Manager as Constructor where the basis of payment is the Cost of the Work Plus a Fee with a Guaranteed Maximum Price

.2 AIA Document A133™-2019, Exhibit A, Guaranteed Maximum Price Amendment, if executed

.3 AIA Document A133™–2019, Exhibit B, Insurance and Bonds

.4 AIA Document A201™–2017, General Conditions of the Contract for Construction

.5 AIA Document E203™–2013, Building Information Modeling and Digital Data Exhibit, dated as indicated below:
(Insert the date of the E203-2013 incorporated into this Agreement.)

.6 Other Exhibits:
(Check all boxes that apply.)

[ ] AIA Document E234™–2019, Sustainable Projects Exhibit, Construction Manager as Constructor Edition, dated as indicated below:
(Insert the date of the E234-2019 incorporated into this Agreement.)

[ ] Supplementary and other Conditions of the Contract:

Document	Title	Date	Pages

.7 Other documents, if any, listed below:
(List here any additional documents that are intended to form part of the Contract Documents. AIA Document A201–2017 provides that the advertisement or invitation to bid, Instructions to Bidders, sample forms, the Construction Manager's bid or proposal, portions of Addenda relating to bidding or proposal requirements, and other information furnished by the Owner in anticipation of receiving bids or proposals, are not part of the Contract Documents unless enumerated in this Agreement. Any such documents should be listed here only if intended to be part of the Contract Documents.)

This Agreement is entered into as of the day and year first written above.

OWNER *(Signature)*	**CONSTRUCTION MANAGER** *(Signature)*
BY:	BY: Reilly Freeman President
(Printed name and title)	*(Printed name and title)*

AIA Document A133 – 2019. Copyright © 1991, 2003, 2009, and 2019. All rights reserved. "The American Institute of Architects," "American Institute of Architects," "AIA," the AIA Logo, and "AIA Contract Documents" are trademarks of The American Institute of Architects. This document was produced at 17:56:15 CST on 11/09/2026 under Subscription No.20240070886 which expires on 10/15/2027, is not for resale, is licensed for one-time use only, and may only be used in accordance with the AIA Contract Documents® Terms of Service. To report copyright violations, e-mail docinfo@aiacontracts.com.
User Notes: (6af25d5fd86fb4f88b5459cc)

Additions and Deletions Report for
AIA® Document A133® – 2019

This Additions and Deletions Report, as defined on page 1 of the associated document, reproduces below all text the author has added to the standard form AIA document in order to complete it, as well as any text the author may have added to or deleted from the original AIA text. Added text is shown underlined. Deleted text is indicated with a horizontal line through the original AIA text.

Note: This Additions and Deletions Report is provided for information purposes only and is not incorporated into or constitute any part of the associated AIA document. This Additions and Deletions Report and its associated document were generated simultaneously by AIA software at 17:56:15 CST on 11/09/2026.

PAGE 1:

AGREEMENT made as of the 9th day of November in the year 2026

The City of The Colony, Texas

6053 Main Street

The Colony, Texas 75056

Steele & Freeman, Inc.

1301 Lawson Rd.

Fort Worth, Texas 76131

The Colony Recreation Center

4431 Augusta Street

The Colony, Texas 75056

Huitt-Zollars Architects

5460 LBJ Freeway Suite 1500

Dallas, Texas 75240

PAGE 2:

TBD

TBD

PAGE 3:

TBD

N/A

Additions and Deletions Report for AIA Document A133 – 2019. Copyright © 1991, 2003, 2009, and 2019. All rights reserved. "The American Institute of Architects," "American Institute of Architects," "AIA," the AIA Logo, and "AIA Contract Documents" are trademarks of The American Institute of Architects. This document was produced at 17:56:15 CST on 11/09/2026 under Subscription No.20240070886 which expires on 10/15/2027, is not for resale, is licensed for one-time use only, and may only be used in accordance with the AIA Contract Documents® Terms of Service. To report copyright violations, e-mail docinfo@aiacontracts.com.
User Notes: (6af25d5fd86fb4f88b5459cc)

N/A

N/A

N/A

N/A

N/A

N/A

TBD

N/A

PAGE 4:

N/A

N/A

N/A

TBD

Bradley Walters, Project Manager

1301 Lawson Rd.

Fort Worth, Texas 76131

bwalters@steelefreeman.com,

817-232-4742

N/A

N/A

N/A

PAGE 6:

§ 3.1.3.3 The Construction Manager shall assist the Owner and Architect in establishing ~~written~~building information modeling and digital data protocols for the ~~development, use, transmission, reliance, and exchange of digital data, including building information models for the Project~~Project, using AIA Document E203™–2013, Building Information Modeling and Digital Data Exhibit, to establish the protocols for the development, use, transmission, and exchange of digital data.

PAGE 7:

N/A

Additions and Deletions Report for AIA Document A133 – 2019. Copyright © 1991, 2003, 2009, and 2019. All rights reserved. "The American Institute of Architects," "American Institute of Architects," "AIA," the AIA Logo, and "AIA Contract Documents" are trademarks of The American Institute of Architects. This document was produced at 17:56:15 CST on 11/09/2026 under Subscription No.20240070886 which expires on 10/15/2027, is not for resale, is licensed for one-time use only, and may only be used in accordance with the AIA Contract Documents® Terms of Service. To report copyright violations, e-mail docinfo@aiacontracts.com.
User Notes: (6af25d5fd86fb4f88b5459cc)

PAGE 10:

Twenty-Five Thousand ($25,000.00)

N/A

~~Individual or Position~~

~~Rate~~

§ 5.1.3 If the Preconstruction Phase services covered by this Agreement have not been completed within N/A (N/A) months of the date of this Agreement, through no fault of the Construction Manager, the Construction Manager's compensation for Preconstruction Phase services shall be equitably adjusted.

§ 5.2.2 Payments are due and payable upon presentation of the Construction Manager's invoice. Amounts unpaid N/A (N/A) days after the invoice date shall bear interest at the rate entered below, or in the absence thereof at the legal rate prevailing from time to time at the principal place of business of the Construction Manager.

PAGE 11:

N/A % N/A

The Construction Manager's Fee shall be 2.25% of the GMP.

The Overhead Fee shall be a lump sum amount of $1,364,646.00 to include project management staff, field project office, office furniture, copy machine/paper, personal computers, office supplies, telephone/data/internet/fax service, vehicle allowance for field staff, postage/shipping/courier service and mobile phones.

Builder's Risk Insurance 0.16% of the GMP.
General/Umbrella Liability Insurance 0.60% of the GMP.
Maintenance, Payment, and Performance Bonds 0.93% of the GMP.
Subcontractor Default Insurance 1.65% of Enrolled Subcontractors/Suppliers

Only by agreement of Owner's City Council.

10% Overhead and 5% Profit

§ 6.1.5 Rental rates for Construction Manager-owned equipment shall not exceed one-hundred percent (100.00 %) of the standard rental rate paid at the place of the Project.

Not Applicable

The Construction Manager shall not participate in savings to the cost of work. Any savings incurred through cost of work shall be recognized through a credit to the GMP.

PAGE 12:

N/A

PAGE 16:

Additions and Deletions Report for AIA Document A133 – 2019. Copyright © 1991, 2003, 2009, and 2019. All rights reserved. "The American Institute of Architects," "American Institute of Architects," "AIA," the AIA Logo, and "AIA Contract Documents" are trademarks of The American Institute of Architects. This document was produced at 17:56:15 CST on 11/09/2026 under Subscription No.20240070886 which expires on 10/15/2027, is not for resale, is licensed for one-time use only, and may only be used in accordance with the AIA Contract Documents® Terms of Service. To report copyright violations, e-mail docinfo@aiacontracts.com.
User Notes: (6af25d5fd86fb4f88b5459cc)

§ 11.1.3 Provided that an Application for Payment is received by the Architect not later than the last day of a month, the Owner shall make payment of the amount certified to the Construction Manager not later than the last day of the following month. If an Application for Payment is received by the Architect after the application date fixed above, payment of the amount certified shall be made by the Owner not later than thirty (30) days after the Architect receives the Application for Payment.

PAGE 17:

Five Percent (5.00%)

PAGE 18:

N/A

N/A

N/A

PAGE 19:

0.00 % Zero Percent

PAGE 20:

[X] Litigation in a court of competent jurisdiction

PAGE 21:

Percentage of Construction Manager's fee and general conditions equal to amount of construction completed to date of termination. Owner shall release accumulated retainage to date of termination.

PAGE 22:

§ 14.3.1.1 Commercial General Liability with policy limits of not less than two-million dollars and no cents ($ 2,000,000.00) for each occurrence and two million dollars and no cents ($ 2,000,000.00) in the aggregate for bodily injury and property damage.

§ 14.3.1.2 Automobile Liability covering vehicles owned, and non-owned vehicles used, by the Construction Manager with policy limits of not less than one-million dollars and no cents ($ 1,000,000.00) per accident for bodily injury, death of any person, and property damage arising out of the ownership, maintenance and use of those motor vehicles, along with any other statutorily required automobile coverage.

§ 14.3.1.4 Workers' Compensation at statutory limits and Employers Liability with policy limits not less than one-million dollars and no cents ($ 1,000,000.00) each accident, one-million dollars and no cents ($ 1,000,000.00) each employee, and one-million dollars and no cents ($ 1,000,000.00) policy limit.

§ 14.3.1.5 Professional Liability covering negligent acts, errors and omissions in the performance of professional services, with policy limits of not less than two-million dollars and no cents ($ 2,000,000.00) per claim and four-million dollars and no cents ($ 4,000,000.00) in the aggregate.

Payment and Performance Bond

Additions and Deletions Report for AIA Document A133 – 2019. Copyright © 1991, 2003, 2009, and 2019. All rights reserved. "The American Institute of Architects," "American Institute of Architects," "AIA," the AIA Logo, and "AIA Contract Documents" are trademarks of The American Institute of Architects. This document was produced at 17:56:15 CST on 11/09/2026 under Subscription No.20240070886 which expires on 10/15/2027, is not for resale, is licensed for one-time use only, and may only be used in accordance with the AIA Contract Documents® Terms of Service. To report copyright violations, e-mail docinfo@aiacontracts.com.
User Notes: (6af25d5fd86fb4f88b5459cc)

100% of the total amount of the contract

Subcontract Default Insurance

1.65% of enrolled subcontractor and supplier contracts

§ 14.3.1.7 Additional Insured Obligations. To the fullest extent permitted by law, the Construction Manager shall cause the primary and excess or umbrella ~~policies~~polices for Commercial General Liability and Automobile Liability to include the Owner as an additional insured for claims caused in whole or in part by the Construction Manager's negligent acts or omissions. The additional insured coverage shall be primary and non-contributory to any of the Owner's insurance policies and shall apply to both ongoing and completed operations.

PAGE 23:

§ 14.4 Notice in electronic format, pursuant to Article 1 of AIA Document A201–2017, may be given in accordance with ~~a building information modeling exhibit~~AIA Document E203™–2013, Building Information Modeling and Digital Data Exhibit, if completed, or as otherwise set forth below:

(If other than in accordance with ~~a building information modeling exhibit~~AIA Document E203–2013, insert requirements for delivering notice in electronic format such as name, title, and email address of the recipient and whether and how the system will be required to generate a read receipt for the transmission.)

.5AIA Document E203™–2013, Building Information Modeling and Digital Data Exhibit, ~~if completed~~dated as indicated below:

(Insert the date of the E203-2013 incorporated into this Agreement.)

Additions and Deletions Report for AIA Document A133 – 2019. Copyright © 1991, 2003, 2009, and 2019. All rights reserved. "The American Institute of Architects," "American Institute of Architects," "AIA," the AIA Logo, and "AIA Contract Documents" are trademarks of The American Institute of Architects. This document was produced at 17:56:15 CST on 11/09/2026 under Subscription No.20240070886 which expires on 10/15/2027, is not for resale, is licensed for one-time use only, and may only be used in accordance with the AIA Contract Documents® Terms of Service. To report copyright violations, e-mail docinfo@aiacontracts.com.
User Notes: (6af25d5fd86fb4f88b5459cc)

Certification of Document's Authenticity

AIA® Document D401™ – 2003

I, Reilly Freeman, hereby certify, to the best of my knowledge, information and belief, that I created the attached final document simultaneously with its associated Additions and Deletions Report and this certification at 17:56:15 CST on 11/09/2026 under Order No. 20240070886 from AIA Contract Documents software and that in preparing the attached final document I made no changes to the original text of AIA® Document A133™ - 2019, Standard Form of Agreement Between Owner and Construction Manager as Constructor where the basis of payment is the Cost of the Work Plus a Fee with a Guaranteed Maximum Price, other than those additions and deletions shown in the associated Additions and Deletions Report.

R. Freeman

(Signed)

President

(Title)

November 9, 2026

(Dated)

AIA Document D401 – 2003. Copyright © 1992 and 2003. All rights reserved. "The American Institute of Architects," "American Institute of Architects," "AIA," the AIA Logo, and "AIA Contract Documents" are trademarks of The American Institute of Architects. This document was produced at 17:56:15 CST on 11/09/2026 under Order No.20240070886 which expires on 10/15/2027, is not for resale, is licensed for one-time use only, and may only be used in accordance with the AIA Contract Documents® Terms of Service. To report copyright violations, e-mail docinfo@aiacontracts.com.
User Notes: (6af25d5fd86fb4f88b5459cc)

AIA® Document A133® – 2019 Exhibit A

Guaranteed Maximum Price Amendment

This Amendment dated the 9th day of November in the year 2026, is incorporated into the accompanying AIA Document A133™–2019, Standard Form of Agreement Between Owner and Construction Manager as Constructor where the basis of payment is the Cost of the Work Plus a Fee with a Guaranteed Maximum Price dated the 9th day of November in the year 2026 (the "Agreement")
(In words, indicate day, month, and year.)

for the following **PROJECT:**
(Name and address or location)

The Colony Recreation Center
4431 Augusta Street
The Colony, Texas 75056

THE OWNER:
(Name, legal status, and address)

The City of The Colony, Texas
6053 Main Street

The Colony, Texas 75056

THE CONSTRUCTION MANAGER:
(Name, legal status, and address)

Steele & Freeman, Inc.
1301 Lawson Road
Fort Worth, Texas 76131

ADDITIONS AND DELETIONS:
The author of this document may have revised the text of the original AIA standard form. An *Additions and Deletions Report* that notes revisions to the standard form text is available from the author and should be reviewed. A vertical line in the left margin of this document indicates where the author has added to or deleted from the original AIA text.

This document has important legal consequences. Consultation with an attorney is encouraged with respect to its completion or modification.

AIA Document A201™–2017, General Conditions of the Contract for Construction, is adopted in this document by reference. Do not use with other general conditions unless this document is modified.

TABLE OF ARTICLES

A.1 GUARANTEED MAXIMUM PRICE

A.2 DATE OF COMMENCEMENT AND SUBSTANTIAL COMPLETION

A.3 INFORMATION UPON WHICH AMENDMENT IS BASED

A.4 CONSTRUCTION MANAGER'S CONSULTANTS, CONTRACTORS, DESIGN PROFESSIONALS, AND SUPPLIERS

ARTICLE A.1 GUARANTEED MAXIMUM PRICE

§ A.1.1 Guaranteed Maximum Price

Pursuant to Section 3.2.6 of the Agreement, the Owner and Construction Manager hereby amend the Agreement to establish a Guaranteed Maximum Price. As agreed by the Owner and Construction Manager, the Guaranteed Maximum Price is an amount that the Contract Sum shall not exceed. The Contract Sum consists of the Construction Manager's Fee plus the Cost of the Work, as that term is defined in Article 6 of the Agreement.

AIA Document A133 – 2019 Exhibit A. Copyright © 1991, 2003, 2009, and 2019. All rights reserved. "The American Institute of Architects," "American Institute of Architects," "AIA," the AIA Logo, and "AIA Contract Documents" are trademarks of The American Institute of Architects. This document was produced at 17:47:24 CST on 11/09/2026 under Subscription No.20240070886 which expires on 10/15/2027, is not for resale, is licensed for one-time use only, and may only be used in accordance with the AIA Contract Documents® Terms of Service. To report copyright violations, e-mail docinfo@aiacontracts.com.
User Notes: (6af25b2d5a16cb79a1e84a27)

§ A.1.1.1 The Contract Sum is guaranteed by the Construction Manager not to exceed Twenty Seven Million Four Hundred Seventy Six Thousand Eight Hundred Twenty Two Dollars ($ 27,476,822.00), subject to additions and deductions by Change Order as provided in the Contract Documents.

§ A.1.1.2 Itemized Statement of the Guaranteed Maximum Price. Provided below is an itemized statement of the Guaranteed Maximum Price organized by trade categories, including allowances; the Construction Manager's contingency; alternates; the Construction Manager's Fee; and other items that comprise the Guaranteed Maximum Price as defined in Section 3.2.1 of the Agreement.
(Provide itemized statement below or reference an attachment.)

Reference Exhibit H" – Guaranteed Maximum Price (GMP) Recap, Page 1, Dated 11/09/2026

§ A.1.1.3 The Construction Manager's Fee is set forth in Section 6.1.2 of the Agreement.

§ A.1.1.4 The method of adjustment of the Construction Manager's Fee for changes in the Work is set forth in Section 6.1.3 of the Agreement.

§ A.1.1.5 Alternates
§ A.1.1.5.1 Alternates, if any, included in the Guaranteed Maximum Price:

Item
Reference Exhibit "F" – Alternates – Page 1, Dated 11/09/2026

§ A.1.1.5.2 Subject to the conditions noted below, the following alternates may be accepted by the Owner following execution of this Exhibit A. Upon acceptance, the Owner shall issue a Modification to the Agreement.
(Insert below each alternate and the conditions that must be met for the Owner to accept the alternate.)

Item
Not Applicable

§ A.1.1.6 Unit prices, if any:
(Identify the item and state the unit price and quantity limitations, if any, to which the unit price will be applicable.)

Item
Reference Exhibit "G" – Unit Prices – Page 1, Dated 11/09/2026

ARTICLE A.2 DATE OF COMMENCEMENT AND SUBSTANTIAL COMPLETION

§ A.2.1 The date of commencement of the Work shall be:
(Check one of the following boxes.)

[ ] The date of execution of this Amendment.

[X] Established as follows:
(Insert a date or a means to determine the date of commencement of the Work.)

The Date of Commencement shall be the first business day following the Construction Manager's receipt of the written Notice to Proceed or issuance of the Full and Unrestricted Building Permit, whichever is later, as outlined in Exhibit "E" – Schedule – Page 1 – Dated 11/09/2026.

If a date of commencement of the Work is not selected, then the date of commencement shall be the date of execution of this Amendment.

AIA Document A133 – 2019 Exhibit A. Copyright © 1991, 2003, 2009, and 2019. All rights reserved. "The American Institute of Architects," "American Institute of Architects," "AIA," the AIA Logo, and "AIA Contract Documents" are trademarks of The American Institute of Architects. This document was produced at 17:47:24 CST on 11/09/2026 under Subscription No.20240070886 which expires on 10/15/2027, is not for resale, is licensed for one-time use only, and may only be used in accordance with the AIA Contract Documents® Terms of Service. To report copyright violations, e-mail docinfo@aiacontracts.com.
User Notes: (6af25b2d5a16cb79a1e84a27)

§ A.2.2 Unless otherwise provided, the Contract Time is the period of time, including authorized adjustments, allotted in the Contract Documents for Substantial Completion of the Work. The Contract Time shall be measured from the date of commencement of the Work.

§ A.2.3 Substantial Completion

§ A.2.3.1 Subject to adjustments of the Contract Time as provided in the Contract Documents, the Construction Manager shall achieve Substantial Completion of the entire Work:
(Check one of the following boxes and complete the necessary information.)

[ ] Not later than ( ) calendar days from the date of commencement of the Work.

[X] Reference Exhibit "E" – Schedule – Page 1– Dates 11/09/2026

§ A.2.3.2 Subject to adjustments of the Contract Time as provided in the Contract Documents, if portions of the Work are to be completed prior to Substantial Completion of the entire Work, the Construction Manager shall achieve Substantial Completion of such portions by the following dates:

Portion of Work	Substantial Completion Date
Not Applicable	

§ A.2.3.3 If the Construction Manager fails to achieve Substantial Completion as provided in this Section A.2.3, liquidated damages, if any, shall be assessed as set forth in Section 6.1.6 of the Agreement.

ARTICLE A.3 INFORMATION UPON WHICH AMENDMENT IS BASED

§ A.3.1 The Guaranteed Maximum Price and Contract Time set forth in this Amendment are based on the Contract Documents and the following:

§ A.3.1.1 The following Supplementary and other Conditions of the Contract:

Document	Title	Date	Pages
Reference Exhibit "B"	Project Manual & Drawings	11/09/2026	Pages 1-9

§ A.3.1.2 The following Specifications:
(Either list the Specifications here, or refer to an exhibit attached to this Amendment.)

Section	Title	Date	Pages
Reference Exhibit "B"	Project Manual & Drawings	11/09/2026	Pages 1-9

§ A.3.1.3 The following Drawings:
(Either list the Drawings here, or refer to an exhibit attached to this Amendment.)

Section	Title	Date	Pages
Reference Exhibit "B"	Project Manual & Drawings	11/09/2026	Pages 1-9

§ A.3.1.4 The Sustainability Plan, if any:
(If the Owner identified a Sustainable Objective in the Owner's Criteria, identify the document or documents that comprise the Sustainability Plan by title, date and number of pages, and include other identifying information. The Sustainability Plan identifies and describes the Sustainable Objective; the targeted Sustainable Measures; implementation strategies selected to achieve the Sustainable Measures; the Owner's and Construction Manager's roles and responsibilities associated with achieving the Sustainable Measures; the specific details about design

AIA Document A133 – 2019 Exhibit A. Copyright © 1991, 2003, 2009, and 2019. All rights reserved. "The American Institute of Architects," "American Institute of Architects," "AIA," the AIA Logo, and "AIA Contract Documents" are trademarks of The American Institute of Architects. This document was produced at 17:47:24 CST on 11/09/2026 under Subscription No.20240070886 which expires on 10/15/2027, is not for resale, is licensed for one-time use only, and may only be used in accordance with the AIA Contract Documents® Terms of Service. To report copyright violations, e-mail docinfo@aiacontracts.com.
User Notes: (6af25b2d5a16cb79a1e84a27)

reviews, testing or metrics to verify achievement of each Sustainable Measure; and the Sustainability Documentation required for the Project, as those terms are defined in Exhibit C to the Agreement.)

Title	Date	Pages
Not Applicable		

Other identifying information:

§ A.3.1.5 Allowances, if any, included in the Guaranteed Maximum Price:
(Identify each allowance.)

Item
Reference Exhibit "C" – Allowances – Page 1, Dated 11/09/2026

§ A.3.1.6 Assumptions and clarifications, if any, upon which the Guaranteed Maximum Price is based:
(Identify each assumption and clarification.)

Reference Exhibit "D" – Clarifications – Page1-3, Dated 11/09/2026

§ A.3.1.7 The Guaranteed Maximum Price is based upon the following other documents and information:
(List any other documents or information here, or refer to an exhibit attached to this Amendment.)

Not Applicable

ARTICLE A.4 CONSTRUCTION MANAGER'S CONSULTANTS, CONTRACTORS, DESIGN PROFESSIONALS, AND SUPPLIERS

§ A.4.1 The Construction Manager shall retain the consultants, contractors, design professionals, and suppliers, identified below:
(List name, discipline, address, and other information.)

Not Applicable

This Amendment to the Agreement entered into as of the day and year first written above.

OWNER *(Signature)*	**CONSTRUCTION MANAGER** *(Signature)*
BY:	BY: Reilly Freeman, President
(Printed name and title)	*(Printed name and title)*

AIA Document A133 – 2019 Exhibit A. Copyright © 1991, 2003, 2009, and 2019. All rights reserved. "The American Institute of Architects," "American Institute of Architects," "AIA," the AIA Logo, and "AIA Contract Documents" are trademarks of The American Institute of Architects. This document was produced at 17:47:24 CST on 11/09/2026 under Subscription No.20240070886 which expires on 10/15/2027, is not for resale, is licensed for one-time use only, and may only be used in accordance with the AIA Contract Documents® Terms of Service. To report copyright violations, e-mail docinfo@aiacontracts.com.
User Notes: (6af25b2d5a16cb79a1e84a27)

Additions and Deletions Report for
AIA® Document A133® – 2019 Exhibit A

This Additions and Deletions Report, as defined on page 1 of the associated document, reproduces below all text the author has added to the standard form AIA document in order to complete it, as well as any text the author may have added to or deleted from the original AIA text. Added text is shown underlined. Deleted text is indicated with a horizontal line through the original AIA text.

Note: This Additions and Deletions Report is provided for information purposes only and is not incorporated into or constitute any part of the associated AIA document. This Additions and Deletions Report and its associated document were generated simultaneously by AIA software at 17:47:24 CST on 11/09/2026.

PAGE 1:

§ A.1.1.1 The Contract Sum is guaranteed by the Construction Manager not to exceed Twenty Seven Million Four Hundred Seventy Six Thousand Eight Hundred Twenty Two Dollars ($ 27,476,822.00), subject to additions and deductions by Change Order as provided in the Contract Documents.

This Amendment dated the 9th day of November in the year 2026, is incorporated into the accompanying AIA Document A133™–2019, Standard Form of Agreement Between Owner and Construction Manager as Constructor where the basis of payment is the Cost of the Work Plus a Fee with a Guaranteed Maximum Price dated the 9th day of November in the year 2026 (the "Agreement")

The Colony Recreation Center

4431 Augusta Street

The Colony, Texas 75056

The City of The Colony, Texas

6053 Main Street

The Colony, Texas 75056

Steele & Freeman, Inc.

1301 Lawson Road
Fort Worth, Texas 76131

PAGE 2:

~~Price~~

~~Price~~

~~Conditions for Acceptance~~

~~Units and Limitations~~

~~Price per Unit ($0.00)~~

Additions and Deletions Report for AIA Document A133 – 2019 Exhibit A. Copyright © 1991, 2003, 2009, and 2019. All rights reserved. "The American Institute of Architects," "American Institute of Architects," "AIA," the AIA Logo, and "AIA Contract Documents" are trademarks of The American Institute of Architects. This document was produced at 17:47:24 CST on 11/09/2026 under Subscription No.20240070886 which expires on 10/15/2027, is not for resale, is licensed for one-time use only, and may only be used in accordance with the AIA Contract Documents® Terms of Service. To report copyright violations, e-mail docinfo@aiacontracts.com.
User Notes: (6af25b2d5a16cb79a1e84a27)

Reference Exhibit H" – Guaranteed Maximum Price (GMP) Recap, Page 1, Dated 11/09/2026

Reference Exhibit "F" – Alternates – Page 1, Dated 11/09/2026

Not Applicable

Reference Exhibit "G" – Unit Prices – Page 1, Dated 11/09/2026

[X] Established as follows:

The Date of Commencement shall be the first business day following the Construction Manager's receipt of the written Notice to Proceed or issuance of the Full and Unrestricted Building Permit, whichever is later, as outlined in Exhibit "E" – Schedule – Page 1 – Dated 11/09/2026.

PAGE 3:

~~Price~~

[X]~~By the following date:~~ Reference Exhibit "E" – Schedule – Page 1– Dates 11/09/2026

Not Applicable

Reference Exhibit "B"

Project Manual & Drawings

11/09/2026

Pages 1-9

Reference Exhibit "B"

Project Manual & Drawings

11/09/2026

Pages 1-9

~~Number~~Section

Pages

Reference Exhibit "B"

Project Manual & Drawings

11/09/2026

Pages 1-9

Not Applicable

PAGE 4:

Additions and Deletions Report for AIA Document A133 – 2019 Exhibit A. Copyright © 1991, 2003, 2009, and 2019. All rights reserved. "The American Institute of Architects," "American Institute of Architects," "AIA," the AIA Logo, and "AIA Contract Documents" are trademarks of The American Institute of Architects. This document was produced at 17:47:24 CST on 11/09/2026 under Subscription No.20240070886 which expires on 10/15/2027, is not for resale, is licensed for one-time use only, and may only be used in accordance with the AIA Contract Documents® Terms of Service. To report copyright violations, e-mail docinfo@aiacontracts.com.
User Notes: (6af25b2d5a16cb79a1e84a27)

Reference Exhibit "C" – Allowances – Page 1, Dated 11/09/2026

Reference Exhibit "D" – Clarifications – Page1-3, Dated 11/09/2026

Not Applicable

Not Applicable

Additions and Deletions Report for AIA Document A133 – 2019 Exhibit A. Copyright © 1991, 2003, 2009, and 2019. All rights reserved. "The American Institute of Architects," "American Institute of Architects," "AIA," the AIA Logo, and "AIA Contract Documents" are trademarks of The American Institute of Architects. This document was produced at 17:47:24 CST on 11/09/2026 under Subscription No.20240070886 which expires on 10/15/2027, is not for resale, is licensed for one-time use only, and may only be used in accordance with the AIA Contract Documents® Terms of Service. To report copyright violations, e-mail docinfo@aiacontracts.com.
User Notes:
(6af25b2d5a16cb79a1e84a27)

Certification of Document's Authenticity

AIA® Document D401™ – 2003

I, Reilly Freeman, hereby certify, to the best of my knowledge, information and belief, that I created the attached final document simultaneously with its associated Additions and Deletions Report and this certification at 17:47:24 CST on 11/09/2026 under Order No. 20240070886 from AIA Contract Documents software and that in preparing the attached final document I made no changes to the original text of AIA® Document A133™ - 2019 Exhibit A, Guaranteed Maximum Price Amendment, other than those additions and deletions shown in the associated Additions and Deletions Report.

_____

(Signed)

President

(Title)

November 9, 2026

(Dated)

AIA Document D401 – 2003. Copyright © 1992 and 2003. All rights reserved. "The American Institute of Architects," "American Institute of Architects," "AIA," the AIA Logo, and "AIA Contract Documents" are trademarks of The American Institute of Architects. This document was produced at 17:47:24 CST on 11/09/2026 under Order No.20240070886 which expires on 10/15/2027, is not for resale, is licensed for one-time use only, and may only be used in accordance with the AIA Contract Documents® Terms of Service. To report copyright violations, e-mail docinfo@aiacontracts.com.
User Notes: (6af25b2d5a16cb79a1e84a27)

PROJECT:
CITY OF THE COLONY - RECREATION CENTER

SFI JOB No. :
5802

ARCHITECT:
HUITT-ZOLLARS
1001 FANNIN STREET, SUITE 4040
HOUSTON, TEXAS 77002

DRAWINGS	ITEM / SHEET N	DESCRIPTION	DATED	ADDENDUM
		GENERAL		
	G-001	COVER	September 21, 2026	
	G-002	SHEET INDEX	September 21, 2026	
	G-003	GENERAL NOTES	September 21, 2026	
	G-004	ACCESSIBILITY STANDARDS	September 21, 2026	
	G-005	CODE ANALYSIS	September 21, 2026	
	LS-101	OVERALL LIFE SAFETY PLAN	September 21, 2026	
	LS-102	OVERALL LIFE SAFETY PLAN	September 21, 2026	
		CIVIL		
	C-001	GENERAL NOTES	September 21, 2026	
	C-002	KEY MAP	September 21, 2026	
	V-101	EXISTING CONDITIONS - AREA 1	September 21, 2026	
	V-102	EXISTING CONDITIONS - AREA 2	September 21, 2026	
	V-103	EXISTING CONDITIONS - AREA 3	September 21, 2026	
	V-104	EXISTING CONDITIONS - AREA 4	September 21, 2026	
	CD-101	DEMOLITION PLAN - AREA 1	September 21, 2026	
	CD-102	DEMOLITION PLAN - AREA 2	September 21, 2026	
	CD-103	DEMOLITION PLAN - AREA 3	September 21, 2026	
	CD-104	DEMOLITION PLAN - AREA 4	September 21, 2026	
	CS-101	SITE PLAN - AREA 1	September 21, 2026	
	CS-102	SITE PLAN - AREA 2	September 21, 2026	
	CS-103	SITE PLAN - AREA 3	September 21, 2026	
	CS-104	SITE PLAN - AREA 4	September 21, 2026	
	CS-111	DIMENSION CONTROL PLAN - AREA 1	September 21, 2026	
	CS-112	DIMENSION CONTROL PLAN - AREA 2	September 21, 2026	
	CS-113	DIMENSION CONTROL PLAN - AREA 3	September 21, 2026	
	CS-114	DIMENSION CONTROL PLAN - AREA 4	September 21, 2026	
	CS-201	ENLARGED DUMPSTER CONTROL PLAN	September 21, 2026	
	CG-101	EXISTING DRAINAGE AREA PLAN	September 21, 2026	
	CG-102	PROPOSED DRAINAGE AREA PLAN	September 21, 2026	
	CG-103	DRAINAGE CALCULATIONS	September 21, 2026	
	CG-104	DRAINAGE CALCULATIONS	September 21, 2026	
	CG-201	GRADING PLAN - AREA 1	September 21, 2026	
	CG-202	GRADING PLAN - AREA 2	September 21, 2026	
	CG-203	GRADING PLAN - AREA 3	September 21, 2026	
	CG-204	GRADING PLAN - AREA 4	September 21, 2026	
	CG-211	DRAINAGE PLAN - AREA 1	September 21, 2026	
	CG-212	DRAINAGE PLAN - AREA 2	September 21, 2026	
	CG-213	DRAINAGE PLAN - AREA 3	September 21, 2026	
	CG-214	DRAINAGE PLAN - AREA 4	September 21, 2026	
	CG-220	STORM DRAIN PROFILES	September 21, 2026	
	CG-221	STORM DRAIN PROFILES	September 21, 2026	
	CG-301	EROSION CONTROL PLAN - AREA 1	September 21, 2026	
	CG-302	EROSION CONTROL PLAN - AREA 2	September 21, 2026	
	CG-303	EROSION CONTROL PLAN - AREA 3	September 21, 2026	
	CG-304	EROSION CONTROL PLAN - AREA 4	September 21, 2026	
	CU-101	WATER PLAN - AREA 2	September 21, 2026	
	CU-102	WATER PLAN - AREA 3	September 21, 2026	

CU-103	WATER PLAN - AREA 4	September 21, 2026	
C-501	PAVING DETAILS	October 21, 2026	**ADDENDUM No. 1**
C-502	PAVING DETAILS	October 21, 2026	**ADDENDUM No. 1**
C-503	PAVING DETAILS	October 21, 2026	**ADDENDUM No. 1**
C-504	PAVING DETAILS	October 21, 2026	**ADDENDUM No. 1**
C-505	PAVING DETAILS	October 21, 2026	**ADDENDUM No. 1**
C-506	PAVING DETAILS	October 21, 2026	**ADDENDUM No. 1**
C-507	DRAINAGE DETAILS	September 21, 2026	
C-508	DRAINAGE DETAILS	September 21, 2026	
C-509	DRAINAGE DETAILS	September 21, 2026	
C-510	DRAINAGE DETAILS	September 21, 2026	
C-511	EROSION CONTROL DETAILS	September 21, 2026	
C-512	EROSION CONTROL DETAILS	September 21, 2026	
C-513	EROSION CONTROL DETAILS	September 21, 2026	
C-514	UTILITY DETAILS	September 21, 2026	
C-515	UTILITY DETAILS	September 21, 2026	
C-516	UTILITY DETAILS	September 21, 2026	
	LANDSCAPING		
L-001	GENERAL NOTES	September 21, 2026	
L-100	PLANTING KEY PLAN	September 21, 2026	
L-101	PLANTING PLAN	September 21, 2026	
L-102	PLANTING PLAN	September 21, 2026	
L-103	PLANTING PLAN	September 21, 2026	
L-104	PLANTING PLAN	September 21, 2026	
L-105	PLANTING PLAN	September 21, 2026	
L-106	PLANTING PLAN	September 21, 2026	
L-107	PLANTING DETAILS	September 21, 2026	
L-200	IRRIGATION KEY PLAN	September 21, 2026	
L-201	IRRIGATION PLAN	September 21, 2026	
L-202	IRRIGATION PLAN	September 21, 2026	
L-203	IRRIGATION PLAN	September 21, 2026	
L-204	IRRIGATION PLAN	September 21, 2026	
L-205	IRRIGATION PLAN	September 21, 2026	
L-206	IRRIGATION PLAN	September 21, 2026	
L-207	IRRIGATION DETAILS	September 21, 2026	
L-208	IRRIGATION DETAILS	September 21, 2026	
	STRUCTURAL		
S-000	STRUCTURAL GENERAL NOTES	September 21, 2026	
S-001	STRUCTURAL GENERAL NOTES	September 21, 2026	
S-002	SPECIAL INSTRUCTIONS	September 21, 2026	
S-100	LEVEL 1 - OVERALL FOUNDATION PLAN	September 21, 2026	
S-101	LEVEL 1- ENLARGED FDN PLAN - AREA 1	September 21, 2026	
S-102	LEVEL 1- ENLARGED FDN PLAN - AREA 2	September 21, 2026	
S-103	LEVEL 1- ENLARGED FDN PLAN - AREA 3	September 21, 2026	
S-104	SITE PLAN AND DETAILS	September 21, 2026	
S-201	LOW ROOF - FRAMING PLAN - AREA 1	September 21, 2026	
S-202	LOW ROOF - FRAMING PLAN - AREA 2	September 21, 2026	
S-203	LEVEL 2 - FRAMING PLAN - AREA 3	September 21, 2026	
S-300	ROOF PLAN	September 21, 2026	
S-400	TYPICAL FOUNDATION DETAILS	September 21, 2026	
S-410	FOUNDATION DETAILS	September 21, 2026	
S-411	FOUNDATION DETAILS	September 21, 2026	
S-500	TYPICAL STEEL FRAMING DETAILS	September 21, 2026	
S-501	TYPICAL LIGHT GAUGE FRAMING DETAILS	September 21, 2026	
S-510	STEEL & STAIR FRAMING DETAILS	September 21, 2026	

S-511	STEEL FRAMING DETAILS	September 21, 2026
S-600	MASONRY DETAILS	September 21, 2026
S-601	MASONRY DETAILS	September 21, 2026
	ARCHITECTURAL	
AS-101	ARCHITECTURAL SITE PLAN	September 21, 2026
AS-102	DUMPSTER ENCLOSURE	September 21, 2026
AS-103	ACCESSIBILITY DETAILS	September 21, 2026
AD-101	OVERALL DEMOLITION PLAN	September 21, 2026
AD-102	DEMOLTION PLAN - AREA 1	September 21, 2026
AD-103	DEMOLTION PLAN - AREA 2	September 21, 2026
AD-104	ROOF DEMOLITION PLAN	September 21, 2026
A-100	LEVEL 1 - OVERALL FLOOR PLAN	September 21, 2026
A-101	LEVEL 1 - FLOOR PLAN - AREA 1	September 21, 2026
A-102	LEVEL 1 - FLOOR PLAN - AREA 2	September 21, 2026
A-103	LEVEL 1 - FLOOR PLAN - AREA 3	September 21, 2026
A-104	LEVEL 2 - FLOOR PLAN - RUNNING TRACK	September 21, 2026
A-110	LEVEL 1- OVERALL RCP	September 21, 2026
A-111	LEVEL 1- RCP- AREA 1	September 21, 2026
A-112	LEVEL 1- RCP- AREA 2	September 21, 2026
A-113	LEVEL 1- RCP- AREA 3	September 21, 2026
A-120	OVERALL ROOF PLAN	September 21, 2026
A-121	ROOF PLAN - AREA 1	September 21, 2026
A-122	ROOF PLAN - AREA 2	September 21, 2026
A-123	ROOF PLAN - AREA 3	September 21, 2026
A-200	ELEVATIONS	September 21, 2026
A-201	ELEVATIONS- GYMNASIUM	September 21, 2026
A-202	ELEVATIONS	September 21, 2026
A-300	BUILDING SECTIONS	September 21, 2026
A-310	WALL SECTIONS	September 21, 2026
A-311	WALL SECTIONS	September 21, 2026
A-312	WALL SECTIONS	September 21, 2026
A-313	WALL SECTIONS	September 21, 2026
A-314	WALL SECTIONS	September 21, 2026
A-400	ENLARGED RESTROOM PLANS	September 21, 2026
A-410	ENLARGED RCP	September 21, 2026
A-411	ENLARGED RCP	September 21, 2026
A-412	ENLARGED RCP	September 21, 2026
A-450	INTERIOR ELEVATIONS- PUBLIC CORRIDORS	September 21, 2026
A-451	INTERIOR ELEVATIONS- RENTAL SPACES	September 21, 2026
A-452	INTERIOR ELEVATIONS- MULTI PURPOSE	September 21, 2026
A-453	INTERIOR ELEVATIONS- FITNESS AREAS	September 21, 2026
A-454	INTERIOR ELEVATIONS- SMALL GYM	September 21, 2026
A-455	INTERIOR ELEVATIONS- GYM	September 21, 2026
A-456	INTERIOR ELEVATIONS- RRMS & LOCKERS	September 21, 2026
A-480	STAIRS ENLARGED PLAN	September 21, 2026
A-481	STAIRS ENLARGED PLAN	September 21, 2026
A-482	STAIR AND RAILING DETAIL	September 21, 2026
A-483	STAIR AND RAILING DETAIL	September 21, 2026
A-490	ELEVATORS	September 21, 2026
A-491	ELEVATOR DETAILS	September 21, 2026
A-500	EXTERIOR DETAILS	September 21, 2026
A-501	EXTERIOR DETAILS	September 21, 2026
A-502	EXTERIOR DETAILS	September 21, 2026
A-503	EXTERIOR DETAILS	September 21, 2026
A-504	DOOR & WINDOW DETAILS	September 21, 2026

A-505	DOOR & WINDOW DETAILS	September 21, 2026
A-506	DOOR & WINDOW DETAILS	September 21, 2026
A-507	DOOR & WINDOW DETAILS	September 21, 2026
A-510	ROOF DETAILS	September 21, 2026
A-511	ROOF DETAILS	September 21, 2026
A-512	ROOF DETAILS	September 21, 2026
A-520	INTERIOR PLAN DETAILS	September 21, 2026
A-530	INTERIOR SECTION DETAILS	September 21, 2026
A-531	CEILING DETAILS	September 21, 2026
A-540	MILLWORK SECTIONS & DETAILS	September 21, 2026
A-541	SPECIALTY MILLWORK	September 21, 2026
A-542	SPECIALTY MILLWORK	September 21, 2026
A-601	TYPICAL PARTITIONS AND DETAILS	September 21, 2026
A-602	TYPICAL PARTITIONS AND DETAILS	September 21, 2026
A-603	DOOR TYPE SCHEDULE	September 21, 2026
A-605	WINDOW SCHEDULE	September 21, 2026
	INTERIORS	
I-100	LEVEL 1- OVERALL FINISH PLAN	September 21, 2026
I-101	LEVEL 1- FINISH PLAN - AREA 1	September 21, 2026
I-102	LEVEL 1- FINISH PLAN - AREA 2	September 21, 2026
I-103	LEVEL 1- FINISH PLAN - AREA 3	September 21, 2026
I-104	LEVEL 2- FINISH PLAN - AREA 3	September 21, 2026
I-111	LVL 1- WALL PROTECTION & SIGNAGE- AREA 1	September 21, 2026
I-112	LVL 1- WALL PROTECTION & SIGNAGE- AREA 2	September 21, 2026
I-113	LVL 1- WALL PROTECTION & SIGNAGE- AREA 3	September 21, 2026
I-401	ENLARGED RRM FINISH PLANS	September 21, 2026
I-600	FINISH SCHEDULE AND DETAILS	September 21, 2026
	FIRE PROTECTION	
F-001	GENERAL NOTES AND SYMBOLS	September 21, 2026
F-101	FIRE SUPPRESSION FLOOR PLAN	September 21, 2026
F-501	FIRE SUPPRESSION DETAILS	September 21, 2026
	PLUMBING	
P-001	GENERAL NOTES AND DESIGN DATA	September 21, 2026
PD-100	OVERALL PLUMBING UNDERFLOOR PLAN DEMO	September 21, 2026
PD-101	PLUMBING UNDERFLOOR PLAN DEMO AREA 1	September 21, 2026
PD-102	PLUMBING UNDERFLOOR PLAN DEMO AREA 2	September 21, 2026
PD-110	PLUMBING DEMO FLOOR PLAN	September 21, 2026
PD-111	PLUMBING DEMO FLOOR PLAN AREA 1	September 21, 2026
PD-112	PLUMBING DEMO FLOOR PLAN AREA 2	September 21, 2026
P-100	OVERALL PLUMBING UNDERFLOOR PLAN	September 21, 2026
P-101	PLUMBING UNDERFLOOR PLAN AREA 1	September 21, 2026
P-102	PLUMBING UNDERFLOOR PLAN AREA 2	September 21, 2026
P-103	PLUMBING UNDERFLOOR PLAN AREA 3	September 21, 2026
P-110	OVERALL PLUMBING FLOOR PLAN	September 21, 2026
P-111	PLUMBING FLOOR PLAN AREA 1	September 21, 2026
P-112	PLUMBING FLOOR PLAN AREA 2	September 21, 2026
P-113	PLUMBING FLOOR PLAN AREA 3	September 21, 2026
P-120	PLUMBING ROOF PLAN	September 21, 2026
P-401	PLUMBING ENLARGED PLANS	September 21, 2026
P-402	PLUMBING ENLARGED PLANS	September 21, 2026
P-403	PLUMBING ENLARGED PLANS	September 21, 2026
P-501	PLUMBING DETAILS	September 21, 2026
P-502	PLUMBING DETAILS	September 21, 2026
P-503	PLUMBING DETAILS	September 21, 2026
P-601	PLUMBING SCHEDULES	September 21, 2026

P-901	PLUMBING RISERS	September 21, 2026
P-902	PLUMBING RISERS	September 21, 2026
P-903	PLUMBING RISERS	September 21, 2026
P-904	PLUMBING RISERS	September 21, 2026
P-905	PLUMBING RISERS	September 21, 2026
P-906	PLUMBING RISERS	September 21, 2026
	MECHANICAL	
M-001	GENERAL NOTES AND DESIGN DATA	September 21, 2026
M-002	HVAC SYMBOLS	September 21, 2026
MD-100	OVERALL DEMOLITION PLAN	September 21, 2026
M-100	OVERALL FLOOR PLAN	September 21, 2026
M-101	HVAC PLAN - AREA 1	September 21, 2026
M-102	HVAC PLAN - AREA 2	September 21, 2026
M-103	HVAC PLAN - AREA 3	September 21, 2026
M-104	HVAC PLAN - ROOF	September 21, 2026
M-201	HVAC PIPING PLAN - AREA 1	September 21, 2026
M-202	HVAC PIPING PLAN - AREA 2	September 21, 2026
M-203	HVAC PIPING PLAN - AREA 3	September 21, 2026
M-401	HVAC ENLARGED PLANS	September 21, 2026
M-501	HVAC DETAILS	September 21, 2026
M-502	HVAC DETAILS	September 21, 2026
M-503	HVAC DETAILS	September 21, 2026
M-504	HVAC DETAILS	September 21, 2026
M-511	HVAC SYSTEM DIAGRAM	September 21, 2026
M-512	HVAC SYSTEM DIAGRAM	September 21, 2026
M-601	HVAC SCHEDULES	September 21, 2026
M-602	HVAC SCHEDULES	September 21, 2026
M-701	HVAC CONTROLS	September 21, 2026
M-702	HVAC CONTROLS	September 21, 2026
M-703	HVAC CONTROLS	September 21, 2026
M-704	HVAC CONTROLS	September 21, 2026
M-705	HVAC CONTROLS	September 21, 2026
	ELECTRICAL	
EE-001	ELECTRICAL LEGEND AND SYMBOLS	September 21, 2026
EE-002	ABBREVIATION AND GENERAL NOTES	September 21, 2026
ED-100	OVERALL DEMOLITION PLAN	September 21, 2026
ED-101	LEVEL 1 - ELECTRICAL DEMOLITION - AREA 1	September 21, 2026
ED-102	LEVEL 1 - ELECTRICAL DEMOLITION - AREA 2	September 21, 2026
ED-601	ONE-LINE DIAGRAM - DEMOLITION	September 21, 2026
ES-100	ELECTRICAL SITE PLAN	September 21, 2026
EE-100	LEVEL 1 - LIGHTING PLAN - OVERALL	September 21, 2026
EE-101	LEVEL 1 - LIGHTING PLAN - AREA 1	September 21, 2026
EE-102	LEVEL 1 - LIGHTING PLAN - AREA 2	September 21, 2026
EE-103	LEVEL 1 - LIGHTING PLAN - AREA 3	September 21, 2026
EE-104	LEVEL 2 - LIGHTING PLAN - AREA 3	September 21, 2026
EE-200	LEVEL 1 - POWER PLAN - OVERALL	September 21, 2026
EE-201	LEVEL 1 - POWER PLAN - AREA 1	September 21, 2026
EE-202	LEVEL 1 - POWER PLAN - AREA 2	September 21, 2026
EE-203	LEVEL 1 - POWER PLAN - AREA 3	September 21, 2026
EE-204	LEVEL 2 - POWER PLAN - AREA 3	September 21, 2026
EE-205	ROOF - POWER PLAN - OVERALL	September 21, 2026
EE-206	ROOF - POWER PLAN - AREA 1	September 21, 2026
EE-207	ROOF - POWER PLAN - AREA 2	September 21, 2026
EE-208	ROOF - POWER PLAN - AREA 3	September 21, 2026
EE-300	LEVEL 1 - FIRE ALARM PLAN	September 21, 2026

EE-301	LEVEL 2 - FIRE ALARM PLAN - AREA 3	September 21, 2026
EE-401	ENLARGED PLANS	September 21, 2026
EE-501	DETAILS	September 21, 2026
EE-502	ELECTRICAL DETAILS	September 21, 2026
EE-601	ONE-LINE DIAGRAM	September 21, 2026
EE-701	CONTROL MATRIX	September 21, 2026
EE-702	LIGHT FIXTURE SCHEDULE	September 21, 2026
EE-703	EQUIPMENT SCHEDULES	September 21, 2026
EE-801	PANEL SCHEDULES	September 21, 2026
EE-802	EXISTING PANEL SCHEDULES	September 21, 2026
EE-803	EXISTING PANEL SCHEDULES	September 21, 2026
EE-900	OVERALL SITE PHOTOMETRIC PLAN	September 21, 2026
EE-901	SITE PHOTOMETRIC - AREA 1	September 21, 2026
EE-902	SITE PHOTOMETRIC - AREA 2	September 21, 2026
EE-903	SITE PHOTOMETRIC - AREA 3	September 21, 2026
EE-904	SITE PHOTOMETRIC - AREA 4	September 21, 2026

SPECIFICATION SECTION, NUMBER & TITLE	DATED
DIVISION 00 - PROCUREMENT AND CONTRACTING REQUIREMENTS	
000101 TABLE OF CONTENTS	September 21, 2026
000107 SEALS PAGE	September 21, 2026
Steele & Freeman, Inc. Front End Documents & Proposal Package Manual	October 13, 2026
DIVISION 01 - GENERAL REQUIREMENTS	
011100 Summary of Work	September 21, 2026
012500 SUBSTITUTION PROCEDURES	September 21, 2026
012613 REQUEST FOR INTERPRETATION (RFI)	September 21, 2026
013100 PROJECT MANAGEMENT AND COORDINATION	September 21, 2026
013200 CONSTRUCTION PROGRESS DOCUMENTATION	September 21, 2026
013300 SUBMITALL PROCEDURES	September 21, 2026
014000 QUALITY REQUIREMENTS	September 21, 2026
014200 REFERENCES	September 21, 2026
015000 TEMP FACILITIES & CONTROLS	September 21, 2026
015723 TEMP STORMWATER POLLUTION CONTROLS	September 21, 2026
016000 PRODUCT REQUIREMENTS	September 21, 2026
017300 EXECUTION	September 21, 2026
017419 CONSTRUCTION WASTE MANAGEMENT & DISPOSAL	September 21, 2026
017700 CLOSEOUT PROCEDURES	September 21, 2026
017823 OPERATION AND MAINTENANCE DATA	September 21, 2026
017839 PROJECT RECORD DOCUMENTS	September 21, 2026
017900 DEMONSTRATION AND TRAINING	September 21, 2026
DIVISION 02 - EXISTING CONDITIONS	
024119 SELECTIVE DEMOLITION	September 21, 2026
DIVISION 03 - CONCRETE	
031000 CONCRETE FORMING AND ACCESSORIES	September 21, 2026
032000 CONCRETE REINFORCING	September 21, 2026
033000 CAST-IN-PLACE CONCRETE	September 21, 2026
03 41 00 PRECAST STRUCTURAL CONCRETE	September 21, 2026
DIVISION 04 - MASONRY	
04 22 00 CONCRETE UNIT MASONRY	September 21, 2026
DIVISION 05 - METALS	
051200 STRUCTURAL STEEL FRAMING	September 21, 2026
052100 STEEL JOIST FRAMING	September 21, 2026
053100 STEEL DECKING	September 21, 2026
DIVISION 06 - WOOD, PLASTICS AND COMPOSITES	
061000 ROUGH CARPENTRY	September 21, 2026
061600 SHEATHING	September 21, 2026
064116 PLASTIC-LAMINATE-CLAD ARCHITECTURAL CABINETS	September 21, 2026

066400 PLASTIC PANELING	September 21, 2026
DIVISION 07 - THERMAL AND MOISTURE PROTECTION	
071900 WATER REPELLENTS	September 21, 2026
072100 THERMAL INSULATION	September 21, 2026
072423 EXTERIOR INSULATION AND FINISH SYSTEMS (EIFS) SURFACING	September 21, 2026
072726 FLUID-APPLIED MEMBRANE AIR BARRIERS	September 21, 2026
074293 SOFFIT PANELS	September 21, 2026
075419 POLYVINYL-CHLORIDE (PVC) ROOFING	September 21, 2026
076200 SHEET METAL FLASHING AND TRIM	September 21, 2026
079200 JOINT SEALANTS	September 21, 2026
079219 ACOUSTICAL JOINT SEALANTS	September 21, 2026
079513.13 INTERIOR EXPANSION JOINT COVER ASSEMBLIES	September 21, 2026
079513.16 EXTERIOR EXPANSION JOINT COVER ASSEMBLIES	September 21, 2026
DIVISION 08 - OPENINGS	
081113 HOLLOW METAL DOORS AND FRAMES	September 21, 2026
081416 FLUSH WOOD DOORS	September 21, 2026
083113 ACCESS DOORS AND FRAMES	September 21, 2026
083323 OVERHEAD COILING DOORS	September 21, 2026
084113 ALUMINUM-FRAMED ENTRANCES AND STOREFRONTS	September 21, 2026
084126.23 INTERIOR ALL-GLASS ENTRANCES	September 21, 2026
084229.23 SLIDING AUTOMATIC ENTRANCES	September 21, 2026
086200 UNIT SKYLIGHTS	September 21, 2026
087100 DOOR HARDWARE	September 21, 2026
088000 GLAZING	September 21, 2026
088113 DECORATIVE GLASS GLAZING	September 21, 2026
088300 MIRRORS	September 21, 2026
089119 FIXED LOUVERS	September 21, 2026
DIVISION 09 - FINISHES	
092216 NON-STRUCTURAL METAL FRAMING	September 21, 2026
092400 CEMENT PLASTERING	September 21, 2026
092900 GYPSUM BOARD	September 21, 2026
093013 CERAMIC TILING	September 21, 2026
095123 ACOUSTICAL TILE CEILINGS	September 21, 2026
096513 RESILIENT BASE AND ACCESSORIES	September 21, 2026
096519 RESILIENT TILE FLOORING	September 21, 2026
096566 RESILIENT ATHLETIC FLOORING	September 21, 2026
096813 TILE CARPETING	September 21, 2026
098433 SOUND-ABSORBING WALL UNITS	September 21, 2026
099114 EXTERIOR PAINTING (MPI STANDARDS)	September 21, 2026
099124 INTERIOR PAINTING (MPI STANDARDS)	September 21, 2026
DIVISION 10 - SPECIALTIES	
101100 VISUAL DISPLAY UNITS	September 21, 2026
101419 DIMENSIONAL LETTER SIGNAGE	September 21, 2026
101423.16 ROOM-IDENTIFICATION PANEL SIGNAGE	September 21, 2026
102113.19 PLASTIC TOILET COMPARTMENTS	September 21, 2026
102239 FOLDING PANEL PARTITIONS	September 21, 2026
102600 WALL AND DOOR PROTECTION	September 21, 2026
102800 TOILET, BATH, AND LAUNDRY ACCESSORIES	September 21, 2026
104413 FIRE PROTECTION CABINETS	September 21, 2026
104416 FIRE EXTINGUISHERS	September 21, 2026
105113 METAL LOCKERS	September 21, 2026
107300 PROTECTIVE COVERS	September 21, 2026
DIVISION 11 - EQUIPMENT	
116623 GYMNASIUM EQUIPMENT	September 21, 2026
116653 GYMNASIUM DIVIDERS	September 21, 2026
118129 HORIZONTAL FALL PROTECTION	September 21, 2026
DIVISION 12 - FURNISHINGS	

122413 ROLLER WINDOW SHADES	September 21, 2026
123361.16 SOLID SURFACING COUNTERTOPS	September 21, 2026
124813 ENTRANCE FLOOR MATS AND FRAMES	September 21, 2026
DIVISION 13 - (NOT USED)	
DIVISION 14 - CONVEYING EQUIPMENT	
142123.16 MACHINE ROOM-LESS ELECTRIC TRACTION PASSENGER ELEVATORS	September 21, 2026
DIVISION 15 through 20 - (NOT USED)	
DIVISION 21 - FIRE SUPPRESSION	
211313 WET-PIPE SPRINKLER SYSTEMS	September 21, 2026
DIVISION 22 - PLUMBING	
220050 GENERAL REQUIREMENTS FOR PLUMBING	September 21, 2026
220500 COMMON WORK RESULT FOR PLUMBING	September 21, 2026
220523 GENERAL-DUTY VALVES FOR PLUMBING	September 21, 2026
220529 HANGERS AND SUPPORT FOR PLUMBING PIPING AND EQUIPMENT	September 21, 2026
220548.13 VIBRATION CONTROLS FOR PLUMBING PIPING AND EQUIPMENT	September 21, 2026
220553 IDENTIFICATION FOR PLUMBING PIPING AND EQUIPMENT	September 21, 2026
220593 TESTING, ADJUSTING, AND BALANCING FOR PLUMBING	September 21, 2026
220719 PLUMBING PIPING INSULATION	September 21, 2026
221116 DOMESTIC WATER PIPING	September 21, 2026
221119 DOMESTIC WATER PIPING SPECIALTIES	September 21, 2026
221123.21 INLINE, DOMESTIC-WATER PUMPS	September 21, 2026
221316 SANITARY WASTE AND VENT PIPING	September 21, 2026
221319 SANITARY WASTE PIPING SPECIALTIES	September 21, 2026
221319.13 SANITARY DRAINS	September 21, 2026
221414 STORM DRAINAGE PIPING	September 21, 2026
221423 STORM DRAINAGE PIPING SPECIALTIES	September 21, 2026
221429 SUMP PUMPS	September 21, 2026
223300 ELECTRIC, DOMESTIC-WATER HEATERS	September 21, 2026
223400 FUEL-FIRED, DOMESTIC-WATER HEATERS	September 21, 2026
224200 COMMERCIAL PLUMBING FIXTURES	September 21, 2026
224700 DRINKING FOUNTAINS AND WATER COOLERS	September 21, 2026
DIVISION 23 HEATING, VENTILATING, AND AIR-CONDITIONING (HVAC)	
230500 COMMON WORK RESULTS FOR HVAC	September 21, 2026
230523.12 BALL VALVES FOR HVAC PIPING	September 21, 2026
230523.13 BUTTERFLY VALVES FOR HVAC PIPING	September 21, 2026
230516 CONDENSING BOILERS	September 21, 2026
230529 HANGERS AND SUPPORTS FOR HVAC PIPING AND EQUIPMENT	September 21, 2026
230553 IDENTIFICATION FOR HVAC PIPING AND EQUIPMENT	September 21, 2026
230593 TESTING, ADJUSTING, AND BALANCING FOR HVAC	September 21, 2026
230713 DUCT INSULATION	September 21, 2026
230719 HVAC PIPING INSULATION	September 21, 2026
230923 DIRECT DIGITAL CONTROL (DDC) SYSTEM FOR HVAC	September 21, 2026
231113 FACILITY NATURAL-GAS PIPING	September 21, 2026
232113 HYDRONIC PIPING	September 21, 2026
232116 HYDRONIC PIPING SPECIALTIES	September 21, 2026
232123 HYDRONIC PUMPS	September 21, 2026
233113 METAL DUCTS	September 21, 2026
233300 AIR DUCT ACCESSORIES	September 21, 2026
233346 FLEXIBLE DUCTS	September 21, 2026
233423 HVAC POWER VENTILATORS	September 21, 2026
233600 AIR TERMINAL UNITS	September 21, 2026
233716 FABRIC AIR-DISTRIBUTION DEVICES	September 21, 2026
235216 CONDENSING BOILERS	September 21, 2026
237416.13 PACKAGED, LARGE-CAPACITY, ROOFTOP AIR-CONDITIONING UNITS	September 21, 2026
238126 SPLIT-SYSTEM AIR-CONDITIONERS	September 21, 2026
DIVISION 24 and 25 - (NOT USED)	
DIVISION 26 ELECTICAL	

260500 COMMON WORK RESULTS FOR ELECTRICAL	September 21, 2026	
260519 LOW-VOLTAGE ELECTRICAL POWER CONDUCTORS AND CABLES	September 21, 2026	
260526 GROUNDING AND BONDING FOR ELECTRICAL SYSTEMS	September 21, 2026	
260529 HANGERS AND SUPPORTS FOR ELECTRICAL SYSTEMS	September 21, 2026	
260533 RACEWAY AND BOXES FOR ELECTRICAL SYSTEMS	September 21, 2026	
260553 IDENTIFICATION FOR ELECTRICAL SYSTEMS	September 21, 2026	
260573.13 SHORT-CIRCUIT STUDIES	September 21, 2026	
260573.16 COORDINATION STUDIES	September 21, 2026	
260573.19 ARC-FLASH HAZARD ANALYSIS	September 21, 2026	
260800 COMMISSIONING OF ELECTRICAL SYSTEMS	September 21, 2026	
260923 LIGHTING CONTROL DEVICES	September 21, 2026	
262213 LOW-VOLTAGE DISTRUBUTION TRANSFORMERS	September 21, 2026	
262413 SWITCHBOARDS	September 21, 2026	
262416 PANELBOARDS	September 21, 2026	
262716 ELECTRICAL CABINETS AND ENCLOSURES	September 21, 2026	
262726 WIRING DEVICES	September 21, 2026	
262816 ENCLOSED SWITCHES AND CIRCUIT BREAKERS	September 21, 2026	
262923 VARIABLE-FREQUENCY MOTOR CONTROLLERS	September 21, 2026	
264313 SURGE PROTECTIVE DEVICES FOR LOW-VOLTAGE ELECTRICAL POWER CIRCUIT	September 21, 2026	
265000 LIGHTING	September 21, 2026	
265613 LIGHTING POLES AND STANDARDS	September 21, 2026	
DIVISION 27 COMMUNICATIONS - (NOT USED)		
DIVISION 28 ELECTRONIC SAFETY AND SECURITY		
284621.11 ADDRESSABLE FIRE-ALARM SYSTEMS	September 21, 2026	
DIVISION 29 and 30 - (NOT USED)		
DIVISION 31 - EARTHWORK		
311000 SITE CLEARING	September 21, 2026	
312000 EARTH MOVING	September 21, 2026	
316329 DRILLED CONCRETE PIERS AND SHAFTS	September 21, 2026	
313215 CHEMICAL INJECTION SUBGRADE STABILIZATION	October 21, 2026	**ADDENDUM No. 1**
DIVISION 32 - EXTERIOR IMPROVEMENTS		
321313 CONCRETE PAVING	September 21, 2026	
321373 CONCRETE PAVING JOINT SEALANTS	September 21, 2026	
321723 PAVEMENT MARKINGS	September 21, 2026	
328400 PLANTING IRRIGATION	September 21, 2026	
329113 SOIL PREPARATION	September 21, 2026	
329200 TURF AND GRASSES	September 21, 2026	
329300 PLANTS	September 21, 2026	
DIVISION 33 – UTILITIES		
331415 SITE WATER DISTRIBUTION PIPING	September 21, 2026	
334200 STORMWATER CONVEYANCE	September 21, 2026	
DIVISION 34 through 49 - (NOT USED)		

	DATED
Addendum #1	October 21, 2026

STEELE & FREEMAN, INC.
CONSTRUCTION MANAGERS

Amendment AIA A133/CMc
Exhibit 'C' - Allowances
11/09/2026 : Date

PROJECT:
CITY OF THE COLONY - RECREATION CENTER

SFI JOB No. :
5802

ARCHITECT:
HUITT-ZOLLARS
1001 FANNIN STREET, SUITE 4040
HOUSTON, TEXAS 77002

ALLOWANCES	DESCRIPTION	AMOUNT
1	Construction Contingency	$824,305
2	Owner Betterment	$549,536
3	Remove & Reinstall Basketball Equipment	$10,000
	ALLOWANCES INCLUDED IN GMP	$1,383,841

GENERAL CLARIFICATIONS

1. COVID-19 or Pandemics issues may delay delivery of equipment and/or labor. Any and all delays related to COVID-19 or unforeseen circumstances outside the Construction Managers control shall be claimed on a day for day basis.
2. The cost of a payment and performance bond is included.
3. The cost of a building permit is excluded.
4. Plat by others.
5. Drawings:
    a. Bid Set - Sealed Documents Dated 09/21/26
    b. Project Manual - 09/21/2026
    c. Addendum #1- 10/21/2026
6. The following items are considered part of the Owner's separate budget and are excluded from this Opinion of Probable Cost Estimate:
    a. Relocation of existing utilities impact fees.
    b. IT Equipment, switches, routers, servers, point of sale systems, workstations, laptops, monitors, keyboards, mice, printers, scanners, copiers, and patch cables are all excluded per RFP
    c. Testing Laboratory Services shall be provided by the Owner and is excluded from this scope of work.
    d. All tap, impact & meter fees.
    e. Any FFE
    f. Division 26&27 Communications
7. This is a non-taxable project and sales tax is included only for applicable items.
8. It is assumed that the final contract documents will have been thoroughly reviewed to meet Federal, State and local codes.
9. Schedule assumes a 15-month project Starts in December of 2026 finishing September 2027.
    a. The Contractor Construction Contingency of 3.00% currently is for the Construction Manager's exclusive use to cover those cost considered reimbursable as the Cost of the Work but not included in a Change Order.
    b. Owner Betterment is included at 2%
10. Temporary fencing is included, around new addition area.
11. Deposits required in advance to procure materials will be included on the pay application within the same pay period in which payment is due for deposit to the subcontractors / suppliers.
12. Materials that are stored onsite or stored at subcontractor's warehouse will be included on pay applications. Invoices and photos of stored materials will be provided upon request.
13. The construction contingency is for the Construction Manager's exclusive use to cover those costs considered reimbursable as the Cost of the Work but not included in a Change Order. All construction contingency expenditures will be documented monthly with each application for payment.
14. All unforeseen scope not clearly identified, not quantified and/or not properly referenced in the contract will be presented to the Owner as a Proposed Change (PC).
15. This project is not a LEED project, therefor VOC Content Restriction (greater than federal or state requirements) and Commissioning is excluded.
16. Video of recorded training will be provided on a thumb drive in lieu of a DVD Disc.
17. Temporary Environmental Controls, Flush Out & Air contaminant testing is not included in this scope of work.

18. Testing Laboratory Services shall be provided by the owner and is excluded from this scope of work.
19. SFI will provide access to the ProjectSight project management software for project documentation.
20. SFI will notify the Design team of any priority submittals and the importance to ensure project stays on schedule. If additional time is required for approval, then delay to material fabrication and delivery could affect the construction schedule. Submittal schedule is excluded.
21. Perspective drawings or architectural renderings are not contract drawings. Only signed and sealed documents are part of the GMP.
22. Franchise utility service charges have been excluded for communication lines, electrical power, Atmos gas, etc.
23. Delegated Design submittals are recognized for the following sections: 03 20 00 Concrete Reinforcing, 05 40 00 Cold-Formed Metal Framing, 05 52 13 Pipe & Tube Railings, 05 73 25 Architectural Aluminum Railings, 07 72 13 Roof Specialties, 08 80 00 Glazing, 10 71 33 Canopy, 23 36 00 Air Terminal Units, 21 10 00 Fire Sprinkler Systems, 28 46 00 Fire Detection and Alarm System, No other Delegated Design requirements are recognized unless noted by section.
24. Unforeseen material delivery and availability issues beyond Steele & Freeman's control shall be a day for day extension to the project schedule.
25. All utilities including but not limited to domestic water, irrigation water, electricity, gas and communications shall be transferred into the Owners name. These utilities shall be the responsibility of the Owner to provide funding from the Date of Substantial completion. All utilities from this date shall not be funded thru the GMP Budget.
26. Due to the current market with shortages of material, we reserve the right to provide substitutions for approval if the the shortage or material causes an increase in material pricing, color, or finish limitations or affects the construction schedule or availability of those materials during construction.
27. Recovery schedule is excluded.

FOUNDATION / STRUCTURE / ENCLOSURE

1. Foundations are assumed to be:
    a. All piers have been bid as temporary cased.
    b. Grade beams include Void forms& soil retainers.
    c. All slab will be water/paper cured.
2. Structural and Miscellaneous Steel is assumed as follows:
    a. We have excluded AISC certifications and inspections. (Cooperation with the Owner's inspector is included).
    b. This project does include Structural Steel, angle Framing and jogging track railing.
    c. All material sizing to comply with U.L. requirements is the responsibility of the Architect and Engineer and not the Construction Manager. Upsizing of steel beyond what is clearly shown, sized and located in the contract documents is excluded.
3. Remaining exterior walls are a combination of storefront, CMU, And EIFS.

INTERIOR FINISHES

1. Hazardous materials identification, testing, abatement, removal, demolition, and/or disposal is excluded.
2. Demolition included as detailed on drawings.
3. We have included signage allowances for a monument sign, directional signs, and building code signage.
4. We included millwork for items that appear to be built in, we have not included FFE.
   All flooring is bid per specifications and drawings. VE offers are as follows:

a. Alternate deduct to change the 6" base from Tarkett to Roppe.
b. Alternate deduct to change the Tarkett 6" base to Roppe 4" base.
c. Alternate deduct to change the Tarkett LVT to either Interface LVT or another manufacturer.
d. Alternate deduct to change SF-1, 3 & 4 from 14mm to their 7mm products.

SPECIALTIES / EQUIPMENT / FURNISHINGS

1. We have excluded all furniture and FFE.

FIRE SPRINKLER

1. It is assumed that the water main will not have sufficient pressure to serve this building; therefore, a Fire Pump has been included.
2. All sprinklers in ceilings are estimated as concealed with matching escutcheon and installed center tile with flex hoses.
3. All exposed areas shall have brass upright sprinklers.

PLUMBING / MECHANICAL

1. Plumbing included based on the current fixtures shown or indicated.
2. Mechanical System is included per schedule.
    a. Trane VE Deduct for Variable Speed Compressors
    b. Trane VE Deduct for Single Wall Intellipaks
    c. Trane VE Deduct for Modulating HGRH AHU-A1-01, A1-02

ELECTRICAL

1. Alternate 1: Unit Pricing for 20a 120v existing branch circuit replacement.
2. VE Fixture & Lighting Controls Package

COMMUNICATIONS / SECURITY / LIFE SAFETY

1. Communications is excluded, by Owner.

SITEWORK

1. We have included site clearing.
2. We have excluded the disposal of any contaminated soils.
3. We have included termite control for all building pad areas.
4. We have not included any flag-poles but can add easily if desired.

SITE UTILITIES

1. We have included site utilities per the current documents.

PROJECT:
CITY OF THE COLONY - RECREATION CENTER

SFI JOB No. :
5802

ARCHITECT:
HUITT-ZOLLARS
1001 FANNIN STREET, SUITE 4040
HOUSTON, TEXAS 77002

COMPLETION SCHEDULE	GENERAL CONSTRUCTION

Estimated Substantial Completion to be within **456 calendar days** from notice to proceed or the issuance of the full and unrestricted building permit, which ever is the later.

PROJECT:
CITY OF THE COLONY - RECREATION CENTER

SFI JOB No. :
5802

ARCHITECT:
HUITT-ZOLLARS
1001 FANNIN STREET, SUITE 4040
HOUSTON, TEXAS 77002

ALTERNATES

VALUE OPPORTUNITIES

No. 1	EIFS Options : 2" traditional EIFS ILO PermaBase CI Direct-Applied system	Pending	PENDING
No. 2	Storefront Options		ACCEPTED
	Frameless (U-channel) System per 084126.23 in lieu of DormaKaba Pure		
a.	Enclosed shown on drawings	Pending	ACCEPTED
b.	Clear Anodized finish ilo Painted finish	Pending	ACCEPTED
c.	SN68 Gray IGUs ilo SolarBlue Solarban 60 IGUs	Pending	
No. 3	Storefront Options		ACCEPTED
a.	Alternate deduct to change the 6" base from Tarkett to Roppe.	Pending	ACCEPTED
b.	Alternate deduct to change the Tarkett 6" base to Roppe 4" base.	Pending	ACCEPTED
c.	Alternate deduct to change the Tarkett LVT to either Interface LVT or another manufacturer.	Pending	
d.	Alternate deduct to change SF-1, 3 & 4 from 14mm to their 7mm products.	Pending	
e.	Change gym floors to wood	Pending	
No. 4	Envelope Revisions		ACCEPTED
	DIV 3 - CONCRETE		
a.	Cast-in-place concrete in lieu of Precast Concrete Beams (Ref. S-203)	Pending	
	DIV 5 - METALS		
b.	Change track framing to channel instead of tube steel	Pending	
	DIV 7 - THERMAL & MOISTURE PROTECT		
c.	Remove Gravel and Recover at Areas A, B, C, D, E & F with	Pending	
d.	Change Specialty Stone Look Coping to Regular 24 GA Kynar	Pending	
No. 5	HVAC Revisions		ACCEPTED
a.	Trane VE Deduct for Variable Speed Compressors	Pending	
b.	Trane VE Deduct for Single Wall Intellipaks	Pending	
c.	Trane VE Deduct for Modulating HGRH AHU-A1-01, A1-02	Pending	

STEELE & FREEMAN, INC.
CONSTRUCTION MANAGERS

Amendment AIA A133/CMc
Exhibit 'G' - Unit Prices
1/09/2026 : Date

PROJECT:
CITY OF THE COLONY - RECREATION CENTER

SFI JOB No. :
5802

ARCHITECT:
HUITT-ZOLLARS
1001 FANNIN STREET, SUITE 4040
HOUSTON, TEXAS 77002

UNIT PRICES	DESCRIPTION	ADD	DEDUCT
	NONE		

STEELE & FREEMAN, INC.
CONSTRUCTION MANAGERS

Amendment AIA A133/CMc
Exhibit 'H' - Guaranteed Maximum
11/09/2026 : Date

PROJECT:
CITY OF THE COLONY - RECREATION CENTER

SFI JOB No. :
5802

ARCHITECT:
HUITT-ZOLLARS
1001 FANNIN STREET, SUITE 4040
HOUSTON, TEXAS 77002

COST SUMMARY - GUARANTEED MAXIMUM PRICE

DIVISION	BID PACKAGE DESCRIPTION	TOTAL COST	BIDS
01	GENERAL CONDITIONS	$1,364,646	
01	EXECUTION AND CLOSEOUT REQUIREMENTS	$816,875	
02	EXISTING CONDITIONS	$276,750	9
03	CONCRETE	$2,189,536	3
04	MASONRY	$1,193,200	2
05	METALS	$1,609,000	6
06	WOODS, PLASTICS and COMPOSITES	$407,633	6
07	THERMAL and MOISTURE PROTECTION	$2,340,770	3
08	OPENINGS	$668,390	1
09	FINISHES	$3,545,927	16
10	SPECIALTIES	$458,055	8
11	EQUIPMENT	$400,925	1
12	FURNISHINGS	$32,000	7
14	CONVEYANCE	$121,500	7
21	FIRE SUPPRESSION	$196,650	5
22/23	PLUMBING & MECHANICAL	$4,652,032	4
26	ELECTRICAL	$2,596,200	4
27	COMMUNICATIONS	$0	9
28	ELECTRONIC SAFETY and SECURITY	$48,000	5
31	EARTHWORK	$897,984	1
32	EXTERIOR IMPROVEMENTS	$442,500	
33	UTILITIES	$390,500	
SUBTOTAL		**$24,649,073**	**97**
00	SUBCONTRACTOR DEFAULT INSURANCE FEE	$368,573	
00	CONTRACTOR CONTINGENCY (3.00%)	$824,305	
00	OWNER BETTERMENT (2.00%)	$549,536	
00	CONSTRUCTION MANAGER FEE (2.25%)	$618,228	
00	PAYMENT and PERFORMANCE BONDS (.77%)	$211,572	
00	2-Year Maintenance Bond (0.16%)	$43,963	
00	BUILDERS RISK (0.17%)	$46,711	
00	GENERAL / EXCESS LIABILITY (0.60%)	$164,861	
TOTAL PROJECT GMP		**$27,476,822**	

CITY OF THE COLONY, TEXAS

RESOLUTION NO. 2026 – _____

A RESOLUTION OF THE CITY COUNCIL OF THE CITY OF THE COLONY, TEXAS, AUTHORIZING THE CITY MANAGER TO EXECUTE A CONSTRUCTION SERVICES CONTRACT BY AND BETWEEN THE CITY OF THE COLONY AND STEELE & FREEMAN, INC., FOR THE CONSTRUCTION OF THE NEW RECREATION CENTER; AND PROVIDING AN EFFECTIVE DATE.

WHEREAS, the City of The Colony, Texas (the "City"), desires to obtain the services of Steele & Freeman, Inc., for the construction of the new Recreation Center; and

WHEREAS, with this Contract the City of The Colony is agreeing to the services not to exceed the amount of $27,476,822.00 for such work to be funded by the Community Development Corporation.

NOW, THEREFORE, BE IT RESOLVED BY THE CITY COUNCIL OF THE CITY OF THE COLONY, TEXAS, THAT:

Section 1. The Construction Services Contract, having been reviewed by the City Council of the City of The Colony, Texas, and found to be acceptable and in the best interest of the City and its citizens, be, and the same is hereby, in all things approved.

Section 2. The City Manager is hereby authorized to execute the Contract on behalf of the City of The Colony, Texas.

Section 3. This Resolution shall take effect immediately from and after its adoption and it is so resolved.

PASSED AND APPROVED BY THE CITY COUNCIL OF THE CITY OF THE COLONY, TEXAS THIS 17TH DAY OF NOVEMBER 2026.

_____
Richard Boyer, Mayor
City of The Colony, Texas

ATTEST:

_____
Tina Stewart, City Secretary, TRMC, CMC

APPROVED AS TO FORM:

_____

Jeffrey L. Moore, City Attorney

CITY COUNCIL Agenda Item Report

Meeting Date: November 17, 2026
Submitted By: Ana Alvarado
Submitting Department: General Admin
Item Type: Resolution
Agenda Section: regular agenda items

Suggested Action:
Discuss and consider a resolution authorizing and approving certain payments by the Colony Local Development Corporation, the Colony Economic Development Corporation, and the Colony Community Development Corporation for costs related to the construction of projects within the Tax Increment Reinvestment Zone No. 1, City of the Colony, Texas for Grandscape; providing for an effective date; and resolving other matters related thereto. (Miller)

Background:
TIRZ ONE Annual Disbursement The Colony has two Tax Increment Reinvestment Zones (TIRZs) where the revenue generated by the site goes to pay back the costs for the site development and improvements. TIRZ ONE - Grandscape - generates sales tax and property tax that is used to pay these costs back. Once the annual debt service for the site's bonds and debt reserve are met; site maintenance and repayment of the developer's private funding for qualified project costs are determined and presented for disbursement. This year, there are excess revenues in each of the various sales taxes and property tax. The disbursements to reimburse the developer are listed below by revenue source. TIRZ ONE FY26/27 Project Funding $1,500,000 for bridge repairs $750,000 for additional boardwalk projects Disbursements by Revenue Source Property Tax (AdVal) - $736,048.20 General City Sales Tax (1%) - $2,575,431.55 Type A (EDC) Sales Tax - $3,320,573.40 Type B (CDC) Sales Tax - $3,324,514.56

Attachments:
Grandscape TIRZ - 2026 - City Council - Resolution Authorizing FYE 2026 Annual Disbursements(1117505.5).pdf

CITY OF THE COLONY, TEXAS

RESOLUTION NO. 2026-___

A RESOLUTION OF THE CITY COUNCIL OF THE CITY OF THE COLONY, TEXAS, AUTHORIZING AND APPROVING CERTAIN PAYMENTS BY THE COLONY LOCAL DEVELOPMENT CORPORATION, THE COLONY ECONOMIC DEVELOPMENT CORPORATION, AND THE COLONY COMMUNITY DEVELOPMENT CORPORATION FOR COSTS RELATED TO THE CONSTRUCTION OF PROJECTS WITHIN TAX INCREMENT REINVESTMENT ZONE NO. 1, CITY OF THE COLONY, TEXAS FOR GRANDSCAPE; PROVIDING FOR AN EFFECTIVE DATE; AND RESOLVING OTHER MATTERS RELATED THERETO.

WHEREAS, on November 8, 2011, the City Council of the City of The Colony, Texas (the "***City Council***"), approved Ordinance No. 2011-1926, designating Tax Increment Reinvestment Zone Number One, City of The Colony, Texas (the "***Zone***"), and designated a Board of Directors for the Zone (the "***Zone Board***"), in accordance with and pursuant to Chapter 311 of the Texas Tax Code, as amended (the "***Act***"); and

WHEREAS, on November 8, 2011, the City Council also approved Resolution No. 2011-075 authorizing and approving the creation of The Colony Local Development Corporation (the "***LDC***") to aid, assist and act for and behalf of the City of the Colony, Texas (the "***City***") and the Zone Board in the management of the Zone and the implementation of the project plan and the financing plan for the Zone in accordance with and pursuant to Subchapter D of Chapter 431 of the Texas Transportation Code, as amended; and

WHEREAS, Section 311.002 of the Texas Tax Code defines authorized "project costs" to include "expenditures made or estimated to be made and monetary obligations incurred or estimated to be incurred by the municipality or county designating a reinvestment zone that are listed in the project plan as costs of public works, public improvements, programs, or other projects benefiting the zone, plus other costs incidental to those expenditures and obligations"; and

WHEREAS, the City Council approved a *Final Project and Reinvestment Zone Financing Plan for Tax Increment Reinvestment Zone Number One, City of the Colony, Texas*, dated November 15, 2011 (the "***2011 Final Project and Finance Plan***") by adoption of Ordinance No. 2011-1929 on November 15, 2011; and

WHEREAS, the City Council approved a *First Supplement to Final Project and Reinvestment Zone Financing Plan for Tax Increment Reinvestment Zone Number One, City of the Colony, Texas*, dated November 5, 2025 (the "***First Supplement***" and together with the 2011 Final Project and Finance Plan, the "***Final Project and Finance Plan***"); and

WHEREAS, the Final Project and Finance Plan provides for the financing of "***TIF Projects***" (defined in the Final Project and Finance Plan), including the construction of a municipal building, and the payment of "***TIF Project Costs***" (defined in the Final Project and Finance Plan) in accordance with the Act; and

WHEREAS, the City and the LDC entered into that certain *Amended and Restated Construction Management Agreement*, effective as of November 20, 2012, (the "***LDC Construction Management Agreement***") with NFM Services, LLC, a Texas limited liability company ("***NFM Services***") to provide for the construction of certain TIF Projects constituting Economic Development Projects (as defined in the Final Project and Finance Plan) and the reimbursement of costs related to such Economic Development Projects advanced by NFM Services ("***NFM Advances***"), in accordance with and pursuant to Section 311.010(b) of the Texas Tax Code, as amended; and

WHEREAS, the City, the Zone Board, and the LDC entered into that certain *Funding Agreement*, effective as of December 11, 2012, (the "***LDC Funding Agreement***") with LMG Ventures, LLC, ("***LMG***"), and TXFM, Inc. ("***TXFM***") related to the funding of certain TIF Projects (as defined in the Final Project and Finance Plan); and

WHEREAS, the City, the Zone Board, and the LDC have entered into that certain *Management Agreement*, effective as of December 6, 2011, as amended and restated by that certain *Amended and Restated Management Agreement*, effective as of February 23, 2021, (the "***LDC Management Agreement***," and together with the LDC Construction Management Agreement and the LDC Funding Agreement, referred to collectively as the "***LDC Agreements***") to address the management of the Zone and the implementation of the Final Project and Finance Plan, including the issuance of TIF Obligations (as defined in the Management Agreement), in accordance with and pursuant to Section 311.010(f) of the Texas Tax Code, as amended; and

WHEREAS, the City and Denton County, Texas (the "***County***") entered into that certain *Agreement to Participate in Tax Increment Reinvestment Zone Number One, City of The Colony, Texas*, effective as of November 11, 2011 (the "***County TIRZ Participation Agreement***"); and

WHEREAS, as described and defined in the Management Agreement, the City has established the "***City Tax Increment Subaccount***" and "***County Tax Increment Subaccount***" within the "***Tax Increment Fund***" for the Zone and is making deposits of the "***City Tax Increment***" into such City Tax Increment Subaccount and is holding deposits of the ***'County Tax Increment***" received by Denton County, Texas, under the County TIRZ Participation Agreement in the County Tax Increment Subaccount as required under Section 4.5 of the Management Agreement; and

WHEREAS, The Colony Economic Development Corporation (the "***Type A Corporation***") entered into that certain *Type A Corporation Performance Agreement* (the "***Type A Performance Agreement***"), effective as of November 15, 2011, with LMG and TXFM in compliance with Section 501.158 of the Act to promote economic development within the City of The Colony, Texas (the "***City***") and to provide for the construction of authorized projects ("***Type A Projects***") as described therein; and

WHEREAS, the Type A Performance Agreement set forth the performance requirements related to certain financial incentives, including the payment of costs for authorized projects ("***Type A Project Costs***"), and established the "***Type A Reimbursement Account***" (as defined in the Type A Performance Agreement) from which Type A Project Costs are to be reimbursed or paid in accordance with the Type A Performance Agreement; and

WHEREAS, the City Council of the City (the "***City Council***") approved and ratified the Type A Performance Agreement by Resolution No. 2011-078 approved on November 15, 2011; and

WHEREAS, the City and the Type A Corporation entered into that certain *Amended and Restated Construction Management Agreement*, effective as of November 20, 2012, (the "***Type A Construction Management Agreement***") with NFM Services to provide for the construction of the Type A Projects described in the Type A Construction Management Agreement and the reimbursement of NFM Advances for Type A Project Costs; and

WHEREAS, the City and the Type A Corporation entered into that certain *Type A Economic Development Funding Agreement*, effective as of December 12, 2012, (the "***Type A Funding Agreement***" and together with the Type A Performance Agreement and the Type A Construction Management Agreement, sometimes referred to collectively as the "***Type A Agreements***") with LMG and TXFM related to the funding of certain Type A Projects described in the Type A Funding Agreement and the payment of Type A Project Costs; and

WHEREAS, the Type A Corporation, with the consent of the City, has issued its *The Colony Economic Development Corporation Sales Tax Revenue Bonds (Nebraska Furniture Mart Texas Project Infrastructure Bonds) Series 2013* (the "***2013 Type A Bonds***") and is party to the *Indenture of Trust and Security Agreement*, dated as of February 1, 2013, as supplemented by the *First Supplemental Trust Indenture*, dated February 1, 2013 (collectively, the "***2013 Type A Bond Indenture***"); and

WHEREAS, The Colony Community Development Corporation (the "***Type B Corporation***") entered into that certain *Type B Corporation Performance Agreement* (the "***Type B Performance Agreement***"), effective as of November 15, 2011, with LMG and TXFM in compliance with Section 501.158 of the Act to promote economic development within the City of The Colony, Texas (the "***City***") and to provide for the construction of authorized projects ("***Type B Projects***") as described therein; and

WHEREAS, the Type B Performance Agreement sets forth the performance requirements related to certain financial incentives, including the payment of costs for authorized projects ("***Type B Project Costs***"), and established the "***Type B Reimbursement Account***" (as defined in the Type B Performance Agreement) from which Type B Project Costs are to be reimbursed or paid in accordance with the Type B Performance Agreement; and

WHEREAS, the City Council of the City (the "***City Council***") approved and ratified the Type B Performance Agreement by Resolution No. 2011-077 approved on November 15, 2011; and

WHEREAS, the City and the Type B Corporation entered into that certain *Amended and Restated Construction Management Agreement*, effective as of November 20, 2012, (the "***Type B Construction Management Agreement***") with NFM Services to provide for the construction of the Type B Projects described in the Type B Construction Management Agreement and the reimbursement of NFM Advances for Type B Project Costs; and

WHEREAS, the City and the Type B Corporation entered into that certain *Type B Economic Development Funding Agreement*, effective as of December 12, 2012, (the "***Type B***

Funding Agreement" and together with the Type B Performance Agreement and the Type B Construction Management Agreement, sometimes referred to collectively as the "***Type B Agreements***") with LMG and TXFM related to the funding of the Type B Projects described in the Type B Funding Agreement and the payment of Type B Project Costs; and

WHEREAS, the Type B Corporation, with the consent of the City, has issued its *The Colony Community Development Corporation Sales Tax Revenue Bonds (Nebraska Furniture Mart Texas Project Infrastructure Bonds) Series 2013* (the "***2013 Type B Bonds***") and is party to the *Indenture of Trust and Security Agreement*, dated as of February 1, 2013, as supplemented by the *First Supplemental Trust Indenture*, dated February 1, 2013 (collectively, the "***2013 Type B Bond Indenture***", and together with the 2013 Type A Bond Indenture, collectively the "***Bond Indentures***"); and

WHEREAS, the LDC, with the approval and consent of the Zone Board and the City, has issued its *The Colony Local Development Corporation Sales Tax Increment Contract Revenue Bonds (Nebraska Furniture Mart Texas Project Infrastructure Bonds), Series 2013A* (the "***Series 2013A Sales Tax Bonds***") and its *The Colony Local Development Corporation Sales Tax Increment Contract Revenue Bonds (Nebraska Furniture Mart Texas Project Infrastructure Bonds), Series 2013* (the "***Series 2013 Sales Tax Bonds***", and together with the Series 2013A Sales Tax Bonds, the "***2013 Sales Tax Bonds***") under an *Indenture of Trust and Security Agreement*, dated February 1, 2013 (the "***LDC Master Indenture***"), as supplemented by a *First Supplemental Trust Indenture*, dated February 1, 2013, and a *Second Supplemental Trust Indenture*, dated February 1, 2013 (collectively with the LDC Master Indenture, the "***LDC Indenture***"), relating to the 2013 Sales Tax Bonds; and

WHEREAS, the City and the LDC have been collecting and depositing the "City Sales Tax Increment" (as defined in the LDC Indenture) into the "City Sales Tax Increment Subaccount" (as defined in the LDC Management Agreement) of the Tax Increment Fund in accordance with the LDC Indenture, the LDC Management Agreement and the LDC Agreements; and

WHEREAS, on February 4, 2025, the City Council approved Resolution No. 2025-022 (the "***2025 Resolution***"), which, among other things: (1) approved the creation of a subaccount within the City Sales Tax Increment Subaccount of the Tax Increment Fund titled the "***Sales Tax Increment Subordinate Lien Obligation Subaccount***" (the "***Subordinate Lien Subaccount***") for the purpose of paying TIF Project Costs that are subordinate lien obligations consisting of payments to NFM Services for NFM Advances and payments to LMG and TXFM for Private Funding Obligations (as defined in the LDC Funding Agreement) under the LDC Agreements; and (2) authorized the execution of a certificate (the "***Acknowledgment Certificate***") acknowledging that such TIF Project Costs constitute "subordinate lien obligations" under Section 4.01(C) of the LDC Indenture, which Acknowledgment Certificate was executed by the City, the LDC and the Zone Board and acknowledged by NFM Services, LMG and TXFM; and

WHEREAS, the Zone Board and the LDC have found and determined, and the City Council hereby finds and determines, that it is necessary and desirable for the implementation of the Final Project and Finance Plan to request, on an annual basis, the disbursement of funds in excess of $4,705,000 from the Pledged Revenue Fund relating to the 2013 Sales Tax Bonds under Section 4.01(C)(5) of the LDC Indenture for deposit into the Subordinate Lien Subaccount so that

subordinate lien obligations related to TIF Project Costs consisting of payments to NFM Services for NFM Advances and payments to LMG and TXFM for Private Funding Obligations under the LDC Agreements may be paid annually; provided, however, that the funds on deposit in the Pledged Revenue Fund following each such disbursement shall be more than the $100,000 required to remain on deposit by Section 4.01(C)(6) of the LDC Indenture; and

WHEREAS, the Zone Board and the LDC have found and determined that the maintenance and repair of TIF Projects are "project costs" as that term is defined in Section 311.002 of the Texas Tax Code and are TIF Project Costs provided for in the Final Project and Finance Plan and that such costs are necessary for the implementation of the Final Project and Finance Plan; and

WHEREAS, the Zone Board and the LDC have found and determined that NFM Advances and payments to LMG and TXFM for Private Funding Obligations (as defined in the LDC Funding Agreements) authorized to be paid hereunder are "project costs" as that term is defined in Section 311.002 of the Texas Tax Code and are TIF Project Costs provided for in the Final Project and Finance Plan; and

WHEREAS, the Zone Board and the LDC have found and determined that NFM Advances and payments to LMG and TXFM for Private Funding Obligations (as defined in the LDC Funding Agreement) authorized to be paid hereunder are "project costs" as that term is defined in Section 311.002 of the Texas Tax Code and are TIF Project Costs provided for in the Final Project and Finance Plan; and

WHEREAS, the Type A Corporation and the Type B Corporation have found and determined that NFM Advances and payments to LMG and TXFM for Private Funding Obligations (as defined in the Type A Funding Agreement and the Type B Funding Agreement) authorized to be paid hereunder are "project costs" as that term is defined in Section 501.152 of the Act and the Type B Agreements; and

WHEREAS, the Zone Board and the LDC have found and determined, and the City hereby finds and determines, that it is necessary for the implementation of the Final Project and Finance Plan to direct the LDC to: (1) maintain a debt service reserve fund (the "***City Tax Increment Subaccount - Debt Service Reserve Fund***") within the City Tax Increment Subaccount of the Tax Increment Fund that shall contain $90,000 at all times as described in Section 3.4 of the First Supplement; (2) fund an annual capital project reserve fund within the City Tax Increment Subaccount of the Tax Increment Fund (the "***City Tax Increment Subaccount – Capital Project Annual Reserve Fund***") to provide for the maintenance and repair of TIF Projects within the Zone as described in Section 3.4 of the First Supplement; (3) make payments from the City Tax Increment Subaccount and County Tax Increment Subaccount of the Tax Increment Fund related to TIF Project Costs, including but not limited to certain reimbursable NFM Advances and payments to LMG and TXFM for a portion of outstanding Private Funding Obligations; and (4) authorize the City Manager of the City, or the City Manager's designee, to approve payments of such TIF Project Costs as described below; and

WHEREAS, the Type A Corporation and the Type B Corporation have found and determined, and the City hereby finds and determines, that it is necessary for the implementation of the Type A Agreements and Type B Agreements, as applicable, to request that the Trustee make certain disbursements from each respective "*Pledged Revenue Account*" relating to the 2013 Type

A Bonds and the 2013 Type B Bonds under Section 4.01(C)(7) of the respective Bonds Indentures on an annual basis for deposit into the Type A Reimbursement Account and Type B Reimbursement Account, as applicable, so that certain Type A Project Costs and Type B Project Costs, including but not limited to costs related to NFM Advances and payments to LMG and TXFM for Private Funding Obligations related to Type A Projects and Type B Projects, respectively, may be paid annually; provided, however, that the funds on deposit in each respective Pledged Revenue Account relating to the 2013 Type A Bonds and the 2013 Type B Bonds shall not be less than $1,200,000 following such annual disbursements; and

WHEREAS, the Type A Corporation and the Type B Corporation have found and determined, and the City hereby finds and determines, that it is necessary and desirable for the implementation of the Type A Agreements and Type B Agreements, as applicable, to: (1) make payments from the respective Type A Reimbursement Fund and Type B Reimbursement Fund related to Type A Project Costs, including but not limited to reimbursement of NFM Advances and payments to LMG and TXFM for outstanding Private Funding Obligations, and Type B Project Costs, including but not limited to certain reimbursable NFM Advances and payments to LMG and TXFM for a portion of outstanding Private Funding Obligations; and (2) authorize the City Manager, or the City Manager's designee, to approve payments of Type A Project Costs and Type B Project Costs, respectively, on an annual basis from funds on deposit in the Type A Reimbursement Fund and Type B Reimbursement Fund in accordance with the applicable Type A Agreement and Type B Agreements.

NOW THEREFORE, BE IT RESOLVED BY THE CITY COUNCIL OF THE CITY OF THE COLONY, TEXAS, THAT:

SECTION 1. The findings set forth above and the exhibits attached hereto are incorporated into the body of this Resolution as if fully set forth herein.

SECTION 2. The EDC and the CDC have authorized and approved, and the City Council hereby authorizes and approves, the respective disbursements of funds under the Bond Indentures as shown on the forms attached as **Exhibit A-1** and **Exhibit A-2**.

SECTION 3. The LDC has authorized and approved, and the City Council hereby authorizes and approves, the disbursement of funds under Section 4.01(C)(5) of the LDC Indenture in the amount of **TWO MILLION FIVE HUNDRED SEVENTY-FIVE THOUSAND FOUR HUNDRED THIRTY-ONE AND 55/100 DOLLARS ($2,575,431.55)** as shown on the Issuer Order (as defined in the LDC Indenture) attached as **Exhibit A-3**, for deposit into the Subordinate Lien Subaccount.

SECTION 4. The LDC has certified to the City that, following the transfer of funds described in Section 3 above, and notwithstanding any moneys required to be deposited under the LDC Indenture, the Pledged Revenue Fund relating to the 2013 Sales Tax Bonds will have at least $4,705,000 on deposit, which is more than the $100,000 required to remain on deposit by Section 4.01(C)(6) of the LDC Indenture.

SECTION 5. The City Council confirms that the Subordinate Lien Subaccount created, and the Acknowledgment Certificate authorized, by the 2025 Resolution remain in effect, and that no further acknowledgment of subordinate lien obligations is required in connection with the payments authorized by this Resolution.

SECTION 6. The Zone Board, the LDC, the EDC and CDC have approved the respective forms attached as **Exhibit B-1**, **Exhibit B-2**, **Exhibit B-3**, **Exhibit B-4**, **Exhibit B-5**, and **Exhibit B-6** (such exhibits are referred to collectively as the "***Annual Authorization Forms***") and have approved, subject to the approval of the City Council, the payments shown on such forms from the Tax Increment Fund (including the Subordinate Lien Subaccount), Type A Reimbursement Fund, and the Type B Reimbursement Fund, as applicable.

SECTION 7. The City Council hereby authorizes and approves the payments from the Tax Increment Fund (including the Subordinate Lien Subaccount), Type A Reimbursement Fund, and the Type B Reimbursement Fund, as applicable, as shown on the Annual Authorization Forms.

SECTION 8. For so long as obligations remain unpaid and outstanding, the Zone Board, the LDC, the EDC and the CDC shall submit forms similar to the Annual Authorization Forms that have been approved by the Zone Board, the LDC, the EDC, and the CDC to the City Council. Following the receipt of such forms, the City Council shall review and consider approval of the payments set forth in such forms without further action required from the Zone Board, the LDC, the EDC or the CDC.

SECTION 9. This Resolution shall become effective immediately upon passage.

[*Remainder of page left blank intentionally. Execution page follows*.]

PASSED AND APPROVED BY THE CITY COUNCIL OF THE CITY OF THE COLONY, TEXAS, THIS THE 17TH DAY OF NOVEMBER, 2026.

THE CITY OF THE COLONY, TEXAS

_____
Richard Boyer, Mayor

ATTEST:

_____
Tina Stewart, Secretary

EXHIBIT A-1

Disbursement Request of
Type A Corporation

ISSUER ORDER

THE STATE OF TEXAS	§
	§
COUNTY OF DENTON	§
	§
THE COLONY ECONOMIC	§
DEVELOPMENT CORPORATION	§

On February 7, 2013, The Colony Economic Development Corporation (the "***Issuer***") issued $29,580,000 in principal amount of The Colony Economic Development Corporation Sales Tax Revenue Bonds (Nebraska Furniture Mart Texas Project Infrastructure Bonds) Series 2013 (the "***Bonds***") under that certain Indenture of Trust and Security Agreement, dated as of February 1, 2013, as supplemented by the First Supplemental Trust Indenture, dated February 1, 2013 (collectively, the "***Indenture***").

I, the undersigned President of The Colony Economic Development Corporation, in my official capacity, DO HEREBY REQUEST the transfer of funds stated below under Section 4.01(C)(7) of the Indenture in the amount stated below and DO HEREBY CERTIFY as follows:

1. I have been duly authorized to submit this Issuer Order to transfer from the Pledged Revenue Fund relating to the Bonds to the Type A Reimbursement Account an amount of **THREE MILLION THREE HUNDRED TWENTY THOUSAND FIVE HUNDRED SEVENTY-THREE AND 40/100 DOLLARS ($3,320,573.40)** to the Type A Reimbursement Account listed below. A true and correct copy of such authorization is attached to this Issuer Order as **Attachment A**.

2. A true and correct copy of the current W-9 for the Issuer is attached to this Issuer Order as **Attachment B**.

3. All moneys required to be deposited under Sections 4.01(C)(1) through (5) of the Indenture have been made.

4. The Issuer has not received any notice of an event of default under the Indenture.

5. Following the one-time transfer of funds described above, the Pledged Revenue Fund will have no less than $1,200,000 on deposit.

Delivered this November 17, 2026.

THE COLONY ECONOMIC DEVELOPMENT CORPORATION

Tom Tvardzik, President

1775.015\1117647.1

ATTACHMENT A TO ISSUER ORDER
AUTHORIZATION OF THE COLONY ECONOMIC DEVELOPMENT CORPORATION

AUTHORIZATION OF ANNUAL PAYMENT FROM THE TYPE A REIMBURSEMENT ACCOUNT OF THE COLONY ECONOMIC DEVELOPMENT CORPORATION

1. As of September 30, 2026, the amount on deposit in the Pledged Revenue Fund relating to *The Colony Economic Development Corporation Sales Tax Revenue Bonds (Nebraska Furniture Mart Texas Project Infrastructure Bonds) Series 2013* (the "***Type A* Bonds**") was $4,520,573.40.

2. The City Manager of the City of The Colony, Texas, or the City Manager's designee, has submitted an Issuer Order executed by the President of The Colony Economic Development Corporation in accordance with Section 4.01(C)(7) of the Indenture of Trust and Security Agreement relating to the Type A Bonds directing the trustee to transfer **THREE MILLION THREE HUNDRED TWENTY THOUSAND FIVE HUNDRED SEVENTY-THREE AND 40/100 DOLLARS ($3,320,573.40)** to the Type A Reimbursement Account.

3. Following the deposit to the Type A Reimbursement Account described above, the Type A Corporation, subject to the approval of the City Council of the City of The Colony, Texas, approves the following payments from the Type A Reimbursement Account the amount of **THREE MILLION THREE HUNDRED TWENTY THOUSAND FIVE HUNDRED SEVENTY-THREE AND 40/100 DOLLARS ($3,320,573.40)** to TXFM, Inc., a Texas corporation ("***TXFM***"), for outstanding Private Funding Obligations as defined and described in the *Type A Economic Development Funding Agreement* (the "***Type A Funding Agreement***"), effective as of December 11, 2012, by and between The Colony Economic Development Corporation, LMG Ventures, LLC, a Texas limited liability company ("***LMG***") and TXFM. The Type A Corporation has no outstanding obligations related to NFM Advances.

EXECUTED THIS 2nd DAY OF NOVEMBER, 2026.

THE COLONY ECONOMIC DEVELOPMENT CORPORATION

Tim Miller, Assistant City Manager as
the City Manager's Designee

1775.015\1117649.1

Attachment A to 2026 EDC (4A) Issuer Order

1775.015\1117647.1

ATTACHMENT B TO ISSUER ORDER

Form **W-9**
(Rev. March 2024)
Department of the Treasury
Internal Revenue Service

Request for Taxpayer Identification Number and Certification

Go to *www.irs.gov/FormW9* for instructions and the latest information.

Give form to the requester. Do not send to the IRS.

Before you begin. For guidance related to the purpose of Form W-9, see *Purpose of Form*, below.

Print or type. See *Specific Instructions* on page 3.

1 Name of entity/individual. An entry is required. (For a sole proprietor or disregarded entity, enter the owner's name on line 1, and enter the business/disregarded entity's name on line 2.)

City of The Colony

2 Business name/disregarded entity name, if different from above.

3a Check the appropriate box for federal tax classification of the entity/individual whose name is entered on line 1. Check only **one** of the following seven boxes.

☐ Individual/sole proprietor ☐ C corporation ☐ S corporation ☐ Partnership ☐ Trust/estate

☐ LLC. Enter the tax classification (C = C corporation, S = S corporation, P = Partnership) . . . . .

Note: Check the "LLC" box above and, in the entry space, enter the appropriate code (C, S, or P) for the tax classification of the LLC, unless it is a disregarded entity. A disregarded entity should instead check the appropriate box for the tax classification of its owner.

☑ Other (see instructions) Municipality

4 Exemptions (codes apply only to certain entities, not individuals; see instructions on page 3):

Exempt payee code (if any)

Exemption from Foreign Account Tax Compliance Act (FATCA) reporting code (if any)

(Applies to accounts maintained outside the United States.)

3b If on line 3a you checked "Partnership" or "Trust/estate," or checked "LLC" and entered "P" as its tax classification, and you are providing this form to a partnership, trust, or estate in which you have an ownership interest, check this box if you have any foreign partners, owners, or beneficiaries. See instructions . . . . . ☐

5 Address (number, street, and apt. or suite no.). See instructions.

6053 Main Street

Requester's name and address (optional)

6 City, state, and ZIP code

The Colony, TX 75056

7 List account number(s) here (optional)

Part I Taxpayer Identification Number (TIN)

Enter your TIN in the appropriate box. The TIN provided must match the name given on line 1 to avoid backup withholding. For individuals, this is generally your social security number (SSN). However, for a resident alien, sole proprietor, or disregarded entity, see the instructions for Part I, later. For other entities, it is your employer identification number (EIN). If you do not have a number, see *How to get a TIN*, later.

Note: If the account is in more than one name, see the instructions for line 1. See also *What Name and Number To Give the Requester* for guidelines on whose number to enter.

Social security number

			–			–				

or

Employer identification number

7	5	–	1	5	7	0	6	7	0

Part II Certification

Under penalties of perjury, I certify that:

1. The number shown on this form is my correct taxpayer identification number (or I am waiting for a number to be issued to me); and
2. I am not subject to backup withholding because (a) I am exempt from backup withholding, or (b) I have not been notified by the Internal Revenue Service (IRS) that I am subject to backup withholding as a result of a failure to report all interest or dividends, or (c) the IRS has notified me that I am no longer subject to backup withholding; and
3. I am a U.S. citizen or other U.S. person (defined below); and
4. The FATCA code(s) entered on this form (if any) indicating that I am exempt from FATCA reporting is correct.

Certification instructions. You must cross out item 2 above if you have been notified by the IRS that you are currently subject to backup withholding because you have failed to report all interest and dividends on your tax return. For real estate transactions, item 2 does not apply. For mortgage interest paid, acquisition or abandonment of secured property, cancellation of debt, contributions to an individual retirement arrangement (IRA), and, generally, payments other than interest and dividends, you are not required to sign the certification, but you must provide your correct TIN. See the instructions for Part II, later.

Sign Here Signature of U.S. person [signature] Date 12 / 1 / 2025

General Instructions

Section references are to the Internal Revenue Code unless otherwise noted.

Future developments. For the latest information about developments related to Form W-9 and its instructions, such as legislation enacted after they were published, go to *www.irs.gov/FormW9*.

What's New

Line 3a has been modified to clarify how a disregarded entity completes this line. An LLC that is a disregarded entity should check the appropriate box for the tax classification of its owner. Otherwise, it should check the "LLC" box and enter its appropriate tax classification.

New line 3b has been added to this form. A flow-through entity is required to complete this line to indicate that it has direct or indirect foreign partners, owners, or beneficiaries when it provides the Form W-9 to another flow-through entity in which it has an ownership interest. This change is intended to provide a flow-through entity with information regarding the status of its indirect foreign partners, owners, or beneficiaries, so that it can satisfy any applicable reporting requirements. For example, a partnership that has any indirect foreign partners may be required to complete Schedules K-2 and K-3. See the Partnership Instructions for Schedules K-2 and K-3 (Form 1065).

Purpose of Form

An individual or entity (Form W-9 requester) who is required to file an information return with the IRS is giving you this form because they

Cat. No. 10231X Form **W-9** (Rev. 3-2024)

ISSUER ORDER

THE STATE OF TEXAS	§
	§
COUNTY OF DENTON	§
	§
THE COLONY COMMUNITY	§
DEVELOPMENT CORPORATION	§

On February 7, 2013, The Colony Community Development Corporation (the "***Issuer***") issued $29,580,000 in principal amount of The Colony Community Development Corporation Sales Tax Revenue Bonds (Nebraska Furniture Mart Texas Project Infrastructure Bonds) Series 2013 (the "***Bonds***") under that certain Indenture of Trust and Security Agreement, dated as of February 1, 2013, as supplemented by the First Supplemental Trust Indenture, dated February 1, 2013 (collectively, the "***Indenture***").

I, the undersigned President of The Colony Community Development Corporation, in my official capacity, DO HEREBY REQUEST the transfer of funds stated below under Section 4.01(C)(7) of the Indenture in the amount stated below and DO HEREBY CERTIFY as follows:

1. I have been duly authorized to submit this Issuer Order to transfer from the Pledged Revenue Fund relating to the Bonds to the Type B Reimbursement Account an amount of **THREE MILLION THREE HUNDRED TWENTY-FOUR THOUSAND FIVE HUNDRED FOURTEEN AND 56/100 DOLLARS ($3,324,514.56)** to the Type B Reimbursement Account listed below. A true and correct copy of such authorization is attached to this Issuer Order as **Attachment A**.

2. A true and correct copy of the current W-9 for the Issuer is attached to this Issuer Order as **Attachment B**.

3. All moneys required to be deposited under Sections 4.01(C)(1) through (5) of the Indenture have been made.

4. The Issuer has not received any notice of an event of default under the Indenture.

5. Following the one-time transfer of funds described above, the Pledged Revenue Fund will have no less than $1,200,000 on deposit.

Delivered this November 17, 2026.

THE COLONY COMMUNITY DEVELOPMENT CORPORATION

Allen Harris, President

ATTACHMENT A TO ISSUER ORDER
AUTHORIZATION OF THE COLONY COMMUNITY DEVELOPMENT CORPORATION

AUTHORIZATION OF ANNUAL PAYMENT
FROM THE TYPE B REIMBURSEMENT ACCOUNT OF
THE COLONY COMMUNITY DEVELOPMENT CORPORATION

1. As of September 30, 2026, the amount on deposit in the Pledged Revenue Fund relating to *The Colony Community Development Corporation Sales Tax Revenue Bonds (Nebraska Furniture Mart Texas Project Infrastructure Bonds) Series 2013* (the "***Type B* Bonds**") was **$4,524,514.56.**

2. The City Manager of the City of The Colony, Texas, or the City Manager's designee, has submitted an Issuer Order executed by the President of The Colony Community Development Corporation in accordance with Section 4.01(C)(7) of the Indenture of Trust and Security Agreement relating to the Type B Bonds directing the trustee to transfer **THREE MILLION THREE HUNDRED TWENTY-FOUR THOUSAND FIVE HUNDRED FOURTEEN AND 56/100 DOLLARS ($3,324,514.56)** to the Type B Reimbursement Account.

3. Following the deposit to the Type B Reimbursement Account described above, the Type B Corporation, subject to the approval of the City Council of the City of The Colony, Texas, approves the following payment from the Type B Reimbursement Account:

   a. The amount of **ONE HUNDRED FORTY-NINE THOUSAND NINE HUNDRED FORTY-TWO AND 79/100 DOLLARS ($149,942.79)** to NFM Services, LLC, a Texas limited liability company ("***NFM Services***"), for reimbursement of all outstanding "***NFM Advances***" as defined in the *Amended and Restated Construction Management Agreement*, effective as of November 20, 2012, by and between The Colony Economic Development Corporation and NFM Services (the "***Type B Construction Management Agreement***") and upon payment of such amount, all outstanding amounts owed to NFM Services to be paid from the Type B Reimbursement Account for NFM Advances, plus interest, shall have been paid in full; and

   b. The amount of **THREE MILLIION ONE HUNDRED SEVENTY-FOUR THOUSAND FIVE HUNDRED SEVENTY-ONE AND 77/100 DOLLARS ($3,174,571.77)** to TXFM, Inc., a Texas corporation ("***TXFM***"), for outstanding Private Funding Obligations as defined and described in the *Type A Economic Development Funding Agreement* (the "***Type B Funding Agreement***"), effective as of December 11, 2012, by and between The Colony Economic Development Corporation, LMG Ventures, LLC, a Texas limited liability company ("***LMG***") and TXFM. **Such payment to TXFM is being made subject to the outstanding NFM Advances to be paid from the Type B Reimbursement Account plus interest as reflected in item #1 above being paid in full.**

EXECUTED THIS 2nd DAY OF NOVEMBER, 2026.

THE COLONY COMMUNITY
DEVELOPMENT CORPORATION

Tim Miller, Assistant City Manager as
the City Manager's Designee

1775.015\1117650.1

1775.015\1117648.1

1775.015\1117505.4

ATTACHMENT B TO ISSUER ORDER

Form **W-9**
(Rev. March 2024)
Department of the Treasury
Internal Revenue Service

Request for Taxpayer Identification Number and Certification

Go to *www.irs.gov/FormW9* for instructions and the latest information.

Give form to the requester. Do not send to the IRS.

Before you begin. For guidance related to the purpose of Form W-9, see *Purpose of Form*, below.

Print or type. See *Specific Instructions* on page 3.

1 Name of entity/individual. An entry is required. (For a sole proprietor or disregarded entity, enter the owner's name on line 1, and enter the business/disregarded entity's name on line 2.)

City of The Colony

2 Business name/disregarded entity name, if different from above.

3a Check the appropriate box for federal tax classification of the entity/individual whose name is entered on line 1. Check only **one** of the following seven boxes.

☐ Individual/sole proprietor ☐ C corporation ☐ S corporation ☐ Partnership ☐ Trust/estate

☐ LLC. Enter the tax classification (C = C corporation, S = S corporation, P = Partnership) . . . . .

Note: Check the "LLC" box above and, in the entry space, enter the appropriate code (C, S, or P) for the tax classification of the LLC, unless it is a disregarded entity. A disregarded entity should instead check the appropriate box for the tax classification of its owner.

☑ Other (see instructions) **Municipality**

4 Exemptions (codes apply only to certain entities, not individuals; see instructions on page 3):

Exempt payee code (if any)

Exemption from Foreign Account Tax Compliance Act (FATCA) reporting code (if any)

(Applies to accounts maintained outside the United States.)

3b If on line 3a you checked "Partnership" or "Trust/estate," or checked "LLC" and entered "P" as its tax classification, and you are providing this form to a partnership, trust, or estate in which you have an ownership interest, check this box if you have any foreign partners, owners, or beneficiaries. See instructions . . . . . ☐

5 Address (number, street, and apt. or suite no.). See instructions.

6053 Main Street

Requester's name and address (optional)

6 City, state, and ZIP code

The Colony, TX 75056

7 List account number(s) here (optional)

Part I Taxpayer Identification Number (TIN)

Enter your TIN in the appropriate box. The TIN provided must match the name given on line 1 to avoid backup withholding. For individuals, this is generally your social security number (SSN). However, for a resident alien, sole proprietor, or disregarded entity, see the instructions for Part I, later. For other entities, it is your employer identification number (EIN). If you do not have a number, see *How to get a TIN*, later.

Note: If the account is in more than one name, see the instructions for line 1. See also *What Name and Number To Give the Requester* for guidelines on whose number to enter.

Social security number

			–			–				

or

Employer identification number

7	5	–	1	5	7	0	6	7	0

Part II Certification

Under penalties of perjury, I certify that:

1. The number shown on this form is my correct taxpayer identification number (or I am waiting for a number to be issued to me); and
2. I am not subject to backup withholding because (a) I am exempt from backup withholding, or (b) I have not been notified by the Internal Revenue Service (IRS) that I am subject to backup withholding as a result of a failure to report all interest or dividends, or (c) the IRS has notified me that I am no longer subject to backup withholding; and
3. I am a U.S. citizen or other U.S. person (defined below); and
4. The FATCA code(s) entered on this form (if any) indicating that I am exempt from FATCA reporting is correct.

Certification instructions. You must cross out item 2 above if you have been notified by the IRS that you are currently subject to backup withholding because you have failed to report all interest and dividends on your tax return. For real estate transactions, item 2 does not apply. For mortgage interest paid, acquisition or abandonment of secured property, cancellation of debt, contributions to an individual retirement arrangement (IRA), and, generally, payments other than interest and dividends, you are not required to sign the certification, but you must provide your correct TIN. See the instructions for Part II, later.

Sign Here **Signature of U.S. person** Ryan Brodbent **Date** 12 / 1 / 2025

General Instructions

Section references are to the Internal Revenue Code unless otherwise noted.

Future developments. For the latest information about developments related to Form W-9 and its instructions, such as legislation enacted after they were published, go to *www.irs.gov/FormW9*.

What's New

Line 3a has been modified to clarify how a disregarded entity completes this line. An LLC that is a disregarded entity should check the appropriate box for the tax classification of its owner. Otherwise, it should check the "LLC" box and enter its appropriate tax classification.

New line 3b has been added to this form. A flow-through entity is required to complete this line to indicate that it has direct or indirect foreign partners, owners, or beneficiaries when it provides the Form W-9 to another flow-through entity in which it has an ownership interest. This change is intended to provide a flow-through entity with information regarding the status of its indirect foreign partners, owners, or beneficiaries, so that it can satisfy any applicable reporting requirements. For example, a partnership that has any indirect foreign partners may be required to complete Schedules K-2 and K-3. See the Partnership Instructions for Schedules K-2 and K-3 (Form 1065).

Purpose of Form

An individual or entity (Form W-9 requester) who is required to file an information return with the IRS is giving you this form because they

Cat. No. 10231X Form **W-9** (Rev. 3-2024)

EXHIBIT A-3

Disbursement Request of LDC
(2013 Sales Tax Bonds)

ISSUER ORDER

THE STATE OF TEXAS	§
	§
COUNTY OF DENTON	§
	§
THE COLONY LOCAL	§
DEVELOPMENT CORPORATION	§

On February 7, 2013, The Colony Local Development Corporation (the "***Issuer***") issued $106,850,000 in principal amount of The Colony Local Development Corporation Sales Tax Increment Contract Revenue Bonds (Nebraska Furniture Mart Texas Project Infrastructure Bonds), Series 2013A (the "***Series 2013A Sales Tax Bonds***") and $15,875,000 in principal amount of The Colony Local Development Corporation Sales Tax Increment Contract Revenue Bonds (Nebraska Furniture Mart Texas Project Infrastructure Bonds), Series 2013 (the "***Series 2013 Sales Tax Bonds***", and together with the Series 2013A Sales Tax Bonds, the "***2013 Sales Tax Bonds***") under an Indenture of Trust and Security Agreement, dated February 1, 2013 (the "***Master Indenture***"), as supplemented by a First Supplemental Trust Indenture, dated February 1, 2013 (the "***First Supplement***"), and a Second Supplemental Trust Indenture, dated February 1, 2013 (the "***Second Supplement***", and together with the Master Indenture and the First Supplement referred to collectively as the "***Indenture***"). Capitalized terms not otherwise defined shall have the meaning given to them in the Indenture or in the Acknowledgment Certificate (defined below).

I, the undersigned President of the Board of Directors of the Issuer, in my official capacity, DO HEREBY REQUEST the transfer of funds stated below under Section 4.01(C)(5) of the Indenture in the amount stated below and DO HEREBY CERTIFY as follows:

1. I have been duly authorized to submit this Issuer Order to transfer from the Pledged Revenue Fund relating to the 2013 Sales Tax Bonds to the Sales Tax Increment Subordinate Lien Obligation Subaccount within the City Sales Tax Increment Subaccount of the Tax Increment Fund an amount of **TWO MILLION FIVE HUNDRED SEVENTY-FIVE THOUSAND FOUR HUNDRED THIRTY-ONE AND 55/100 DOLLARS ($2,575,431.55)** for the payment of "subordinate lien obligations" under Section 4.01(C)(5) of the Indenture.
2. A true and correct copy of the certificate (the "***Acknowledgment Certificate***") acknowledging the payments to NFM Services for NFM Advances and payments to LMG and TXFM for Private Funding Obligations under the LDC Agreements (as defined and described in the Acknowledgment Certificate) as subordinate lien obligations is attached to this Issuer Order as **Attachment A**.
3. A true and correct copy of the resolution authorizing this Issuer Order is attached hereto as **Attachment B**.
4. A true and correct copy of the current W-9 for the Issuer is attached to this Issuer Order as **Attachment C**.
5. All moneys required to be deposited under Sections 4.01(C)(1) through (5) of the Indenture have been made.
6. The Issuer has not received any notice of an event of default under the Indenture.
7. As required by Section 4.01(C)(6) of the Indenture, the Issuer has certified in writing to the City that following the one-time transfer of funds described above, and notwithstanding any moneys required to be deposited under the Indenture, the Pledged Revenue Fund will have no less than $4,705,000 on deposit which is more than the $100,000 required to remain on deposit in the Pledged Revenue Fund.

Delivered this November 17, 2026.

THE COLONY LOCAL DEVELOPMENT CORPORATION

_____

Richard Boyer, President

1775.015\1118096.1

ATTACHMENT A TO ISSUER ORDER
ACKNOWLEDGEMENT CERTIFICATE

ACKNOWLEDGMENT CERTIFICATE

The undersigned, in our respective official capacities stated below, DO HEREBY CERTIFY with respect to The Colony Local Development Corporation Sales Tax Increment Contract Revenue Bonds (Nebraska Furniture Mart Texas Project Infrastructure Bonds), Series 2013A (the "***Series 2013A Sales Tax Bonds***") and The Colony Local Development Corporation Sales Tax Increment Contract Revenue Bonds (Nebraska Furniture Mart Texas Project Infrastructure Bonds), Series 2013 (the "***Series 2013 Sales Tax Bonds***", and together with the Series 2013A Sales Tax Bonds, the "***2013 Sales Tax Bonds***") issued by The Colony Local Development Corporation (the "***Issuer***"), with the approval of the City of The Colony, Texas (the "***City***"), under an Indenture of Trust and Security Agreement, dated February 1, 2013 (the "***Master Indenture***"), as supplemented by a First Supplemental Trust Indenture, dated February 1, 2013 (the "***First Supplement***"), and a Second Supplemental Trust Indenture, dated February 1, 2013 (the "***Second Supplement***", and together with the Master Indenture and the First Supplement referred to collectively as the "***Indenture***"), as follows:

1. All capitalized terms not otherwise defined in this Certificate shall have the meaning given to them in the Indenture.

2. The undersigned have been authorized by their respective entities to execute this Certificate on behalf of their respective entities.

3. The City and the Issuer entered into that certain *Amended and Restated Construction Management Agreement*, effective as of November 20, 2012, (the "***Construction Management Agreement***") with NFM Services, LLC, a Texas limited liability company ("***NFM Services***") to provide for the construction of certain TIF Projects (as defined in the Construction Management Agreement) constituting Economic Development Projects (as defined in the Final Project and Finance Plan) and the reimbursement of costs related to such Economic Development Projects advanced by NFM Services ("***NFM Advances***"), in accordance with and pursuant to Section 311.010(b) of the Texas Tax Code, as amended. A true and correct copy of the Construction Management Agreement is attached hereto as **Exhibit A** and incorporated herein for all purposes.

4. The City, the Issuer, and the Board of Directors (the "***Zone Board***") of Tax Increment Reinvestment Zone Number One, City of The Colony, Texas (the "***Zone***") entered into that certain *Funding Agreement*, effective as of December 11, 2012, (the "***Funding Agreement***", and together with the Construction Management Agreement referred to collectively as the "***LDC Agreements***") with LMG Ventures, LLC, ("***LMG***"), and TXFM, Inc. ("***TXFM***") related to the funding of certain TIF Projects (as defined in the Final Project and Finance Plan). A true and correct copy of the Funding Agreement is attached hereto as **Exhibit B** and incorporated herein for all purposes.

5. The City, the Issuer and the Zone Board entered into that certain *Management Agreement*, effective as of December 6, 2011, as amended and restated by that certain *Amended and Restated Management Agreement*, effective as of February 23, 2021, (the "***Management Agreement***") to address the management of the Zone and the implementation of the Final Project and Finance Plan, including the issuance of TIF Obligations (as defined in the Management

Agreement), in accordance with and pursuant to Section 311.010(f) of the Texas Tax Code, as amended. A true and correct copy of the Management Agreement is attached hereto as **Exhibit C** and incorporated herein for all purposes.

6. The City, the Issuer and the Zone Board have found and determined that payments to NFM Services for NFM Advances and payments to LMG and TXFM for Private Funding Obligations (as defined in the Funding Agreement) are "project costs" as that term is defined in Section 311.002 of the Texas Tax Code and are TIF Project Costs provided for in the Final Project and Finance Plan

7. The City, the Issuer and the Zone Board have found and determined that the TIF Project Costs consisting of payments to NFM Services for NFM Advances and payments to LMG and TXFM for Private Funding Obligations under the LDC Agreements constitute "subordinate lien obligations" under Section 4.01(C) of the Indenture.

8. The City, the Issuer and the Zone Board have found and determined that it is necessary and desirable for the implementation of the Final Project and Finance Plan to request disbursement of funds under Section 4.01(C)(5) of the Indenture to pay outstanding subordinate lien obligations consisting of payments to NFM Services for NFM Advances and payments to LMG and TXFM for Private Funding Obligations under the LDC Agreements on an annual basis; provided, however, that the Issuer shall certify to the City prior to any such disbursement that following the requested disbursement, and notwithstanding any moneys required to be deposited by the Indenture, the Pledged Revenue Account shall have more than $100,000 on deposit at all times as required by Section 4.01(C)(6) of the Indenture.

9. This Certificate may be executed in separate counterparts, each of which when so executed and delivered shall be an original and all of such counterparts shall together constitute one and the same instrument.

[*Remainder of page left blank intentionally. Execution pages follow*.]

The undersigned hereby certify that the information contained in the foregoing Acknowledgment Certificate is true and correct as of February 4, 2025.

THE CITY:

THE CITY OF THE COLONY, TEXAS

By: _____

Tim Miller, Assistant Manager as the
City Manager's Designee

ISSUER:

THE COLONY LOCAL DEVELOPMENT CORPORATION

By: _____

Richard Boyer, President

THE ZONE BOARD:

TAX INCREMENT REINVESTMENT ZONE NO. 1,
THE CITY OF THE COLONY, TEXAS

By: _____

Tim Miller, Assistant Manager as the
City Manager's Designee

The undersigned hereby acknowledge receipt of the foregoing Acknowledgment Certificate.

NFM SERVICES, LLC
a Texas limited liability company

By: _____
Title: Executive Vice President
Date: January 30, 2025

LMG VENTURES, LLC
a Texas limited liability company

By: _____
Title: Executive Vice President
Date: January 30, 2025

TXFM, INC.
a Texas corporation

By: _____
Title: Executive Vice President
Date: January 30, 2025

ATTACHMENT B TO ISSUER ORDER
RESOLUTION OF THE COLONY LOCAL DEVELOPMENT CORPORATION

[*Executed Resolution to be inserted subject to approval on November 17, 2026*]

ATTACHMENT C TO ISSUER ORDER
W-9 OF THE COLONY LOCAL DEVELOPMENT CORPORATION

Form **W-9**
(Rev. March 2024)
Department of the Treasury
Internal Revenue Service

Request for Taxpayer Identification Number and Certification

Go to *www.irs.gov/FormW9* for instructions and the latest information.

Give form to the requester. Do not send to the IRS.

Before you begin. For guidance related to the purpose of Form W-9, see *Purpose of Form*, below.

Print or type. See *Specific Instructions* on page 3.

1 Name of entity/individual. An entry is required. (For a sole proprietor or disregarded entity, enter the owner's name on line 1, and enter the business/disregarded entity's name on line 2.)

City of The Colony

2 Business name/disregarded entity name, if different from above.

3a Check the appropriate box for federal tax classification of the entity/individual whose name is entered on line 1. Check only one of the following seven boxes.

☐ Individual/sole proprietor ☐ C corporation ☐ S corporation ☐ Partnership ☐ Trust/estate

☐ LLC. Enter the tax classification (C = C corporation, S = S corporation, P = Partnership) . . . . .

Note: Check the "LLC" box above and, in the entry space, enter the appropriate code (C, S, or P) for the tax classification of the LLC, unless it is a disregarded entity. A disregarded entity should instead check the appropriate box for the tax classification of its owner.

☑ Other (see instructions) Municipality

4 Exemptions (codes apply only to certain entities, not individuals; see instructions on page 3):

Exempt payee code (if any)

Exemption from Foreign Account Tax Compliance Act (FATCA) reporting code (if any)

(Applies to accounts maintained outside the United States.)

3b If on line 3a you checked "Partnership" or "Trust/estate," or checked "LLC" and entered "P" as its tax classification, and you are providing this form to a partnership, trust, or estate in which you have an ownership interest, check this box if you have any foreign partners, owners, or beneficiaries. See instructions . . . . . ☐

5 Address (number, street, and apt. or suite no.). See instructions.

6053 Main Street

Requester's name and address (optional)

6 City, state, and ZIP code

The Colony, TX 75056

7 List account number(s) here (optional)

Part I Taxpayer Identification Number (TIN)

Enter your TIN in the appropriate box. The TIN provided must match the name given on line 1 to avoid backup withholding. For individuals, this is generally your social security number (SSN). However, for a resident alien, sole proprietor, or disregarded entity, see the instructions for Part I, later. For other entities, it is your employer identification number (EIN). If you do not have a number, see *How to get a TIN*, later.

Note: If the account is in more than one name, see the instructions for line 1. See also *What Name and Number To Give the Requester* for guidelines on whose number to enter.

Social security number

___ - ___ - ____

or

Employer identification number

75-1570670

Part II Certification

Under penalties of perjury, I certify that:

1. The number shown on this form is my correct taxpayer identification number (or I am waiting for a number to be issued to me); and
2. I am not subject to backup withholding because (a) I am exempt from backup withholding, or (b) I have not been notified by the Internal Revenue Service (IRS) that I am subject to backup withholding as a result of a failure to report all interest or dividends, or (c) the IRS has notified me that I am no longer subject to backup withholding; and
3. I am a U.S. citizen or other U.S. person (defined below); and
4. The FATCA code(s) entered on this form (if any) indicating that I am exempt from FATCA reporting is correct.

Certification instructions. You must cross out item 2 above if you have been notified by the IRS that you are currently subject to backup withholding because you have failed to report all interest and dividends on your tax return. For real estate transactions, item 2 does not apply. For mortgage interest paid, acquisition or abandonment of secured property, cancellation of debt, contributions to an individual retirement arrangement (IRA), and, generally, payments other than interest and dividends, you are not required to sign the certification, but you must provide your correct TIN. See the instructions for Part II, later.

Sign Here Signature of U.S. person Ryan Buckhaut Date 12 / 1 / 2025

General Instructions

Section references are to the Internal Revenue Code unless otherwise noted.

Future developments. For the latest information about developments related to Form W-9 and its instructions, such as legislation enacted after they were published, go to *www.irs.gov/FormW9*.

What's New

Line 3a has been modified to clarify how a disregarded entity completes this line. An LLC that is a disregarded entity should check the appropriate box for the tax classification of its owner. Otherwise, it should check the "LLC" box and enter its appropriate tax classification.

New line 3b has been added to this form. A flow-through entity is required to complete this line to indicate that it has direct or indirect foreign partners, owners, or beneficiaries when it provides the Form W-9 to another flow-through entity in which it has an ownership interest. This change is intended to provide a flow-through entity with information regarding the status of its indirect foreign partners, owners, or beneficiaries, so that it can satisfy any applicable reporting requirements. For example, a partnership that has any indirect foreign partners may be required to complete Schedules K-2 and K-3. See the Partnership Instructions for Schedules K-2 and K-3 (Form 1065).

Purpose of Form

An individual or entity (Form W-9 requester) who is required to file an information return with the IRS is giving you this form because they

Cat. No. 10231X Form **W-9** (Rev. 3-2024)

Exhibit B-1

Type A Corporation Authorization Form

AUTHORIZATION OF ANNUAL PAYMENT FROM THE TYPE A REIMBURSEMENT ACCOUNT OF THE COLONY ECONOMIC DEVELOPMENT CORPORATION

1. As of September 30, 2026, the amount on deposit in the Pledged Revenue Fund relating to *The Colony Economic Development Corporation Sales Tax Revenue Bonds (Nebraska Furniture Mart Texas Project Infrastructure Bonds) Series 2013* (the "***Type A* Bonds**") was $4,520,573.40.

2. The City Manager of the City of The Colony, Texas, or the City Manager's designee, has submitted an Issuer Order executed by the President of The Colony Economic Development Corporation in accordance with Section 4.01(C)(7) of the Indenture of Trust and Security Agreement relating to the Type A Bonds directing the trustee to transfer **THREE MILLION THREE HUNDRED TWENTY THOUSAND FIVE HUNDRED SEVENTY-THREE AND 40/100 DOLLARS ($3,320,573.40)** to the Type A Reimbursement Account.

3. Following the deposit to the Type A Reimbursement Account described above, the Type A Corporation, subject to the approval of the City Council of the City of The Colony, Texas, approves the following payments from the Type A Reimbursement Account the amount of **THREE MILLION THREE HUNDRED TWENTY THOUSAND FIVE HUNDRED SEVENTY-THREE AND 40/100 DOLLARS ($3,320,573.40)** to TXFM, Inc., a Texas corporation ("***TXFM***"), for outstanding Private Funding Obligations as defined and described in the *Type A Economic Development Funding Agreement* (the "***Type A Funding Agreement***"), effective as of December 11, 2012, by and between The Colony Economic Development Corporation, LMG Ventures, LLC, a Texas limited liability company ("***LMG***") and TXFM. The Type A Corporation has no outstanding obligations related to NFM Advances.

EXECUTED THIS 2nd DAY OF NOVEMBER, 2026.

THE COLONY ECONOMIC DEVELOPMENT CORPORATION

Tim Miller, Assistant City Manager as
the City Manager's Designee

1775.015\1117649.1

Exhibit B-2

Type B Corporation Authorization Form

AUTHORIZATION OF ANNUAL PAYMENT
FROM THE TYPE B REIMBURSEMENT ACCOUNT OF
THE COLONY COMMUNITY DEVELOPMENT CORPORATION

1. As of September 30, 2026, the amount on deposit in the Pledged Revenue Fund relating to *The Colony Community Development Corporation Sales Tax Revenue Bonds (Nebraska Furniture Mart Texas Project Infrastructure Bonds) Series 2013* (the "***Type B* Bonds**") was **$4,524,514.56.**

2. The City Manager of the City of The Colony, Texas, or the City Manager's designee, has submitted an Issuer Order executed by the President of The Colony Community Development Corporation in accordance with Section 4.01(C)(7) of the Indenture of Trust and Security Agreement relating to the Type B Bonds directing the trustee to transfer **THREE MILLION THREE HUNDRED TWENTY-FOUR THOUSAND FIVE HUNDRED FOURTEEN AND 56/100 DOLLARS ($3,324,514.56)** to the Type B Reimbursement Account.

3. Following the deposit to the Type B Reimbursement Account described above, the Type B Corporation, subject to the approval of the City Council of the City of The Colony, Texas, approves the following payment from the Type B Reimbursement Account:

   a. The amount of **ONE HUNDRED FORTY-NINE THOUSAND NINE HUNDRED FORTY-TWO AND 79/100 DOLLARS ($149,942.79)** to NFM Services, LLC, a Texas limited liability company ("***NFM Services***"), for reimbursement of all outstanding "***NFM Advances***" as defined in the *Amended and Restated Construction Management Agreement*, effective as of November 20, 2012, by and between The Colony Economic Development Corporation and NFM Services (the "***Type B Construction Management Agreement***") and upon payment of such amount, all outstanding amounts owed to NFM Services to be paid from the Type B Reimbursement Account for NFM Advances, plus interest, shall have been paid in full; and

   b. The amount of **THREE MILLIION ONE HUNDRED SEVENTY-FOUR THOUSAND FIVE HUNDRED SEVENTY-ONE AND 77/100 DOLLARS ($3,174,571.77)** to TXFM, Inc., a Texas corporation ("***TXFM***"), for outstanding Private Funding Obligations as defined and described in the *Type A Economic Development Funding Agreement* (the "***Type B Funding Agreement***"), effective as of December 11, 2012, by and between The Colony Economic Development Corporation, LMG Ventures, LLC, a Texas limited liability company ("***LMG***") and TXFM. **Such payment to TXFM is being made subject to the outstanding NFM Advances to be paid from the Type B Reimbursement Account plus interest as reflected in item #1 above being paid in full.**

EXECUTED THIS 2nd DAY OF NOVEMBER, 2026.

THE COLONY COMMUNITY
DEVELOPMENT CORPORATION

Tim Miller, Assistant City Manager as
the City Manager's Designee

1775.015\1117650.1

Exhibit B-3

Zone Board Authorization Form (Tax Increment Subaccounts)

AUTHORIZATION OF ANNUAL PAYMENT FROM THE CITY TAX INCREMENT SUBACCOUNT AND COUNTY TAX INCREMENT SUBACCOUNT OF THE TAX INCREMENT FUND FOR TAX INCREMENT REINVESTMENT ZONE NO. 1 CITY OF THE COLONY, TEXAS

1. As of September 30, 2026, the amount on deposit in the City Tax Increment Subaccount of the Tax Increment Fund was $2,574,743.94 and the amount on deposit in the County Tax Increment Subaccount of the Tax Increment Fund was $501,304.26.

2. Subject to the approval of the City Council of the City, the Board of Directors of Tax Increment Reinvestment Zone No. 1 ("***Board***") hereby approves the following payments from the City Tax Increment Subaccount and County Tax Increment Subaccount of the Tax Increment Fund in the following order of priority:

   (a) FIRST, the amount of **NINETY THOUSAND AND 00/100 DOLLARS ($90,000.00)** to the "***City Tax Increment Subaccount - Debt Service Reserve Fund***" such that no less than $90,000.00 shall be retained in such City Tax Increment Subaccount - Debt Service Reserve Fund of the City Tax Increment Subaccount of the Tax Increment Fund at all times in accordance with Section 3.4 of that certain *First Supplement to Final Project and Reinvestment Zone Financing Plan for Tax Increment Reinvestment Zone Number One, City of The Colony, Texas*, dated November 5, 2025 (the "***First Supplement***"); and

   (b) SECOND, the amount of **TWO MILLION TWO HUNDRED FIFTY THOUSAND AND 00/100 DOLLARS ($2,250,000.00)** to the "***City Tax Increment Subaccount - Capital Project Annual Reserve Fund***" in accordance with Section 3.4 of the First Supplement; and

   (c) THIRD, the amount of **SEVEN HUNDRED THIRTY-SIX THOUSAND FORTY-EIGHT AND 20/100 DOLLARS ($736,048.20)** to LMG Ventures, LLC, a Texas limited liability company ("LMG"), for outstanding Private Funding Obligations as defined and described in the Funding Agreement (the "Funding Agreement"), effective as of December 11, 2012, by and between: the City of The Colony, Texas, (ii) the Board, (iii) The Colony Local Development Corporation, (iv) TXFM, Inc., a Texas corporation, and (v) LMG. The Board confirms there are no outstanding obligations related to NFM Advances to be paid from the City Tax Increment Subaccount or the County Tax Increment Subaccount of the Tax Increment Fund.

EXECUTED THIS 2ND DAY OF NOVEMBER, 2026.

TAX INCREMENT REINVESTMENT ZONE NO. 1, CITY OF THE COLONY, TEXAS

Tim Miller, Assistant City Manager as the
City Manager's Designee

1775.015\1117652.1

Exhibit B-4

LDC Authorization Form (Tax Increment Subaccounts)

AUTHORIZATION OF ANNUAL PAYMENT FROM THE CITY TAX INCREMENT SUBACCOUNT AND COUNTY TAX INCREMENT SUBACCOUNT OF THE TAX INCREMENT FUND FOR TAX INCREMENT REINVESTMENT ZONE NO. 1 CITY OF THE COLONY, TEXAS

1. As of September 30, 2026, the amount on deposit in the City Tax Increment Subaccount of the Tax Increment Fund was $2,574,743.94 and the amount on deposit in the County Tax Increment Subaccount of the Tax Increment Fund was $501,304.26.

2. Subject to the approval of the City Council of the City, The Colony Local Development Corporation ("***LDC***") hereby approves the following payments from the City Tax Increment Subaccount and County Tax Increment Subaccount of the Tax Increment Fund in the following order of priority:

   (a) FIRST, the amount of **NINETY THOUSAND AND 00/100 DOLLARS ($90,000.00)** to the "***City Tax Increment Subaccount - Debt Service Reserve Fund***" such that no less than $90,000.00 shall be retained in such City Tax Increment Subaccount - Debt Service Reserve Fund of the City Tax Increment Subaccount of the Tax Increment Fund at all times in accordance with Section 3.4 of that certain *First Supplement to Final Project and Reinvestment Zone Financing Plan for Tax Increment Reinvestment Zone Number One, City of The Colony, Texas*, dated November 5, 2025 (the "First Supplement"); and

   (b) SECOND, the amount of **ONE MILLION FIVE HUNDRED THOUSAND AND 00/100 DOLLARS ($1,500,000.00)** to the "***City Tax Increment Subaccount - Capital Project Annual Reserve Fund***" in accordance with Section 3.4 of the First Supplement; and

   (c) THIRD, the amount of **SEVEN HUNDRED THIRTY-SIX THOUSAND FORTY-EIGHT AND 20/100 DOLLARS ($736,048.20)** to LMG Ventures, LLC, a Texas limited liability company ("***LMG***"), for outstanding Private Funding Obligations as defined and described in the *Funding Agreement* (the "***Funding Agreement***"), effective as of December 11, 2012, by and between: (i) the City of The Colony, Texas, (ii) the Board of Directors of Tax Increment Reinvestment Zone Number One, City of The Colony, Texas, (iii) the LDC, (iv) TXFM, Inc., a Texas corporation, and (v) LMG. The LDC has no outstanding obligations related to NFM Advances to be paid from the City Tax Increment Subaccount or the County Tax Increment Subaccount of the Tax Increment Fund.

EXECUTED THIS 2ND DAY OF NOVEMBER, 2026.

THE COLONY LOCAL DEVELOPMENT CORPORATION

Tim Miller, Assistant City Manager as the
City Manager's Designee

1775.015\1117651.1

Exhibit B-5

Zone Board Authorization Form (Sales Tax Subordinate Lien Subaccount)

AUTHORIZATION OF ANNUAL PAYMENT FROM THE SALES TAX INCREMENT SUBORDINATE LIEN OBLIGATION SUBACCOUNT WITHIN THE CITY SALES TAX INCREMENT SUBACCOUNT OF THE TAX INCREMENT FUND FOR TAX INCREMENT REINVESTMENT ZONE NO. 1 CITY OF THE COLONY, TEXAS

1. As of September 30, 2026, the amount on deposit in the Pledged Revenue Fund relating to The Colony Local Development Corporation Sales Tax Increment Contract Revenue Bonds (Nebraska Furniture Mart Texas Project Infrastructure Bonds), Series 2013A (the "***Series 2013A Sales Tax Bonds***") and The Colony Local Development Corporation Sales Tax Increment Contract Revenue Bonds (Nebraska Furniture Mart Texas Project Infrastructure Bonds), Series 2013 (the "***Series 2013 Sales Tax Bonds***", and together with the Series 2013A Sales Tax Bonds, the "***2013 Sales Tax Bonds***") under an Indenture of Trust and Security Agreement, dated February 1, 2013 (the "***Master Indenture***"), as supplemented by a First Supplemental Trust Indenture, dated February 1, 2013 (the "***First Supplement***"), and a Second Supplemental Trust Indenture, dated February 1, 2013 (the "***Second Supplement***", and together with the Master Indenture and the First Supplement referred to collectively as the "***Indenture***") was $8,391,872.73. Capitalized terms used in this Authorization that are not otherwise defined shall have the meaning given to them in the Indenture.

2. The Colony Local Development Corporation (the "***LDC***"), with the approval of the City of The Colony, Texas (the "***City***"), previously submitted an Issuer Order authorizing the transfer of funds on deposit in the Pledged Revenue Fund in excess of $4,705,000 to the "***Sales Tax Increment Subordinate Lien Obligation Subaccount***" (as defined in the Issuer Order) within the City Sales Tax Increment Subaccount (as defined in the Issuer Order) of the Tax Increment Fund.

3. Subject to the approval of the City Council of the City and The Colony Local Development Corporation, the Board of Directors of Tax Increment Reinvestment Zone Number One, City of The Colony, Texas, hereby approves the payment from the Sales Tax Increment Subordinate Lien Obligation Subaccount within the City Sales Tax Increment Subaccount of the Tax Increment Fund in the amount of **TWO MILLION FIVE HUNDRED SEVENTY-FIVE THOUSAND FOUR HUNDRED THIRTY-ONE AND 55/100 DOLLARS ($2,575,431.55)** for TIF Project Costs consisting of payment to NFM Services for outstanding NFM Advances.

EXECUTED THIS 2nd DAY OF NOVEMBER, 2026.

TAX INCREMENT REINVESTMENT ZONE NO. 1, CITY OF THE COLONY, TEXAS

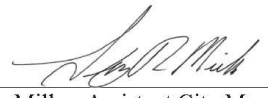

Tim Miller, Assistant City Manager as the
City Manager's Designee

1775.015\1117779.1

Exhibit B-6

LDC Authorization Form (Sales Tax Subordinate Lien Subaccount)

AUTHORIZATION OF ANNUAL PAYMENT FROM THE SALES TAX INCREMENT SUBORDINATE LIEN OBLIGATION SUBACCOUNT WITHIN THE CITY SALES TAX INCREMENT SUBACCOUNT OF THE TAX INCREMENT FUND FOR TAX INCREMENT REINVESTMENT ZONE NO. 1 CITY OF THE COLONY, TEXAS

1. As of September 30, 2026, the amount on deposit in the Pledged Revenue Fund relating to The Colony Local Development Corporation Sales Tax Increment Contract Revenue Bonds (Nebraska Furniture Mart Texas Project Infrastructure Bonds), Series 2013A (the "***Series 2013A Sales Tax Bonds***") and The Colony Local Development Corporation Sales Tax Increment Contract Revenue Bonds (Nebraska Furniture Mart Texas Project Infrastructure Bonds), Series 2013 (the "***Series 2013 Sales Tax Bonds***", and together with the Series 2013A Sales Tax Bonds, the "***2013 Sales Tax Bonds***") under an Indenture of Trust and Security Agreement, dated February 1, 2013 (the "***Master Indenture***"), as supplemented by a First Supplemental Trust Indenture, dated February 1, 2013 (the "***First Supplement***"), and a Second Supplemental Trust Indenture, dated February 1, 2013 (the "***Second Supplement***", and together with the Master Indenture and the First Supplement referred to collectively as the "***Indenture***") was $8,391,872.73. Capitalized terms used in this Authorization that are not otherwise defined shall have the meaning given to them in the Indenture.

2. The Colony Local Development Corporation (the "***LDC***"), with the approval of the City of The Colony, Texas (the "***City***"), previously submitted an Issuer Order authorizing the transfer of funds on deposit in the Pledged Revenue Fund in excess of $4,705,000 to the "***Sales Tax Increment Subordinate Lien Obligation Subaccount***" (as defined in the Issuer Order) within the City Sales Tax Increment Subaccount (as defined in the Issuer Order) of the Tax Increment Fund.

3. Subject to the approval of the City Council of the City and the Board of Directors of Tax Increment Reinvestment Zone Number One, City of The Colony, Texas, The Colony Local Development Corporation hereby approves the payment from the Sales Tax Increment Subordinate Lien Obligation Subaccount within the City Sales Tax Increment Subaccount of the Tax Increment Fund in the amount of **TWO MILLION FIVE HUNDRED SEVENTY-FIVE THOUSAND FOUR HUNDRED THIRTY-ONE AND 55/100 DOLLARS ($2,575,431.55)** for TIF Project Costs consisting of payment to NFM Services for outstanding NFM Advances.

EXECUTED THIS 2nd DAY OF NOVEMBER, 2026.

THE COLONY LOCAL DEVELOPMENT CORPORATION

Tim Miller, Assistant City Manager as the
City Manager's Designee

1775.015\1117780.1

CITY COUNCIL Agenda Item Report

Meeting Date: November 17, 2026
Submitted By: Ana Alvarado
Submitting Department: City Secretary
Item Type: Discussion
Agenda Section: executive session

Suggested Action:
Council shall convene into a closed executive session pursuant to Sections 551.072 and 551.087 of the Texas Government Code to deliberate regarding purchase, exchange, lease or value of real property and commercial or financial information the city has received from a business prospect(s), and to deliberate the offer of a financial or other incentive to a business prospect(s).

Background:

CITY COUNCIL Agenda Item Report

Meeting Date: November 17, 2026
Submitted By: Ana Alvarado
Submitting Department: City Secretary
Item Type: Discussion
Agenda Section: executive session

Suggested Action:
Council shall convene into a closed executive session pursuant to Section 551.071 of the Texas Government Code to receive legal advice from its attorney regarding pending litigation: TOCA Colony, LLC v. Blue Sky Sports Center, LP, and the City of The Colony, Texas.

Background:

CITY COUNCIL Agenda Item Report

Meeting Date: November 17, 2026
Submitted By: Ana Alvarado
Submitting Department: City Secretary
Item Type: Discussion
Agenda Section: executive session action

Suggested Action:
Any action as a result of executive session regarding purchase, exchange, lease or value of real property and commercial or financial information the city has received from a business prospect(s), and the offer of a financial or other incentive to a business prospect(s).

Background:

CITY COUNCIL Agenda Item Report

Meeting Date: November 17, 2026
Submitted By: Ana Alvarado
Submitting Department: City Secretary
Item Type: Discussion
Agenda Section: executive session action

Suggested Action:
Any action as a result of executive session regarding pending litigation: TOCA Colony, LLC v. Blue Sky Sports Center, LP, and the City of The Colony, Texas.

Background: