Wendell Planning Board

Board Room

Town Hall, 409 Landing View Drive, Wendell, NC, 27591

Regular Session Agenda

Monday, June 15, 2026 @ 7:00 PM

CALL TO ORDER

A quorum of five members of the Planning Board is required before taking official action.

- Welcome by Vice-Chairman Tevis High
- Pledge of Allegiance by Planning Board Representative

1. ADJUSTMENT AND APPROVAL OF THE AGENDA

2. ADJUSTMENT AND APPROVAL OF THE MINUTES

2.a March 16, 2026 Planning Board Meeting Minutes

Staff Contact: Sara-Grace Corey
Planning Administrative Assistant

scorey@townofwendellnc.gov

3. NEW BUSINESS

3.a CD25-02 – A Request to Rezone Approximately +/- 6.25 Acres from Rural Agricultural (RA) to Neighborhood Center Conditional District (NC-CD) to Create Jake May Mixed-Use Development Phase 2

Staff Contact: Bryan Coates
Planning Director

bcoates@townofwendellnc.gov

4. PLANNING DIRECTOR UPDATES

ADJOURN

AGENDA ITEM NO. 2.a

Item Cover Page

PLANNING BOARD AGENDA ITEM REPORT

DATE:	June 15, 2026
SUBMITTED BY:	Jeannine Ngwira , Planning
ITEM TYPE:	Minutes
AGENDA SECTION:	ADJUSTMENT AND APPROVAL OF THE MINUTES
SUBJECT:	March 16, 2026 Planning Board Meeting Minutes

ATTACHMENTS:
Planning Board Minutes 3.16.26 - DRAFT.pdf

Town of Wendell
Town of Wendell Planning Board
Monday March 16, 2026 @ 7:00 PM
Town Board Room

MINUTES

Members Present: Lewis Hardee, Gregory Hopkins Jr., Caleb Sanderson, Jonathan Olson, Kenneth Weeden

Members Absent: Nate Wyscarver, Matthew Meining, Graham Andres, Tevis High

Staff Present: Bryan Coates, Planning Director; Stacy Griffin, Assistant Planning Director; Kevin McCarthy, Planner III; Sara-Grace Corey, Planning Administrative Assistant

Call to Order

Chairman Jonathan Olson called the meeting to order at 7 p.m. and recognized a quorum (minimum of five members) was present.

- Pledge of Allegiance was recited.

1. Adjustment and Approval of the Agenda

Caleb Sanderson made a motion to approve the agenda, and Gregory Hopkins Jr. seconded the motion. All were in favor and the motion passed unanimously.

2. Adjustment and Approval of the Minutes

Mr. Sanderson made a motion to approve the minutes, and Mr. Hopkins seconded the motion. All were in favor and the motion passed unanimously.

3. New Business

CD25-01: A Request to Rezone Approximately +/- 2.82 Acres from Wake County Residential 30 (WC-R30) to Town of Wendell Neighborhood Center Conditional District (NC-CD) to Construct a Child Daycare.

Assistant Planning Director Stacy Griffin said the Planning Board is asked to consider the proposed rezoning request and make a recommendation to the Board of Commissioners, to include a statement of plan consistency and reasonableness.

Ms. Griffin said the request is to rezone approximately 2.82 acres at 729 Eagle Rock Road (PIN 1774-45-6682) from Wake County Residential 30

(WC R-30) to Town of Wendell Neighborhood Center Conditional District (NC-CD) to create a commercial parcel containing a child daycare. She said the parcel is owned by 729 Eagle Rock LLC. Ms. Griffin said the proposed daycare building is 12,614 square feet with a 7,050 square foot playground space in the rear. She said the parcel will connect to Eagle Rock Road in the front and to Old Battle Bridge Road in the rear.

Ms. Griffin said the property will be required to annex into Town limits and as such will receive services from Town departments. Ms. Griffin said water and sewer are available to the property and would be provided by the City of Raleigh Public Utilities Department.

She said the applicant is meeting the required setbacks for the NC district other than the maximum setback of 10 feet. Ms. Griffin said they are asking for relief from that requirement via Condition 1.

Ms. Griffin said the proposed building will exceed the maximum setback limit due to site topography conditions. Ms. Griffin said the rear yard buffer between proposed commercial zoning and residential zoning districts will not meet width requirements for a Type B buffer yard. She said the width shall be what is required for a Type C buffer yard (10 feet reduced to 7.5 feet with addition of opaque fence) and will be planted to meet landscape requirements for Type B buffer yard.

Ms. Griffin said the proposed plans show the development of one stormwater control measure.

Ms. Griffin said when a commercial use borders a single-family residential use, a 20-foot Type B buffer is required. She said the applicant requests that a 10-foot Type C buffer width, which would be reduced to 7.5 feet with an opaque fence, be allowed but they have agreed to install the amount of plantings that would be required if the Type B buffer were installed. Ms. Griffin said a Type B buffer is 20 feet wide and contains a tree every 25 feet and a shrub every 6 feet. She said the single-family home properties to the east of the proposed 7.5-foot buffer have 20 feet of open space at the rear of the lots.

Ms. Griffin said a TIA was not required for this project as it did not meet the threshold. Ms. Griffin said the UDO does require right-of-way dedication, additional asphalt, sidewalk, and street trees with a change of use from residential to commercial. She said those are shown on both the Eagle Rock and Old Battle Bridge Road frontages.

Ms. Griffin said the Wendell Blueprint 2030 Comprehensive Plan identifies this parcel Medium Residential Living 2. She said the proposed development does not meet the description of the Medium Residential Living – 2 place type as it does not allow for commercial development. Ms. Griffin said if this conditional district rezoning is approved, the place type would be changed to Activity Center 1 which is intended for a mix of retail, restaurant, service, office and civic uses in addition to residential. She said the parcel is adjacent to other parcels designated as Activity Center.

Ms. Griffin said any recommended change to the zoning map should be accompanied by a statement explaining how the change is/is not consistent with the comprehensive plan and is/is not reasonable in nature. She said while the plan is not consistent with Blueprint Wendell 2030, it could be considered reasonable as it assists with plan goals.

- Centers of Activity CS1 - support development of key nodes (large and small). Ms. Griffin said it is consistent with the Future Land Use map, delineate centers of activity where the more intense development includes a mix of uses. She said this development is adjacent to developments designated as Activity Center 2 and 3.
- Economic Development E3.7 - to reduce retail leakage and increase spending on businesses here. She said daycares are in high demand as the Town grows. Ms. Griffin said this site will help local families who might have to go to adjacent towns to find daycare.

Ms. Griffin said the applicant held an in-person neighborhood meeting on August 28, 2025, and one neighbor was in attendance. She said meeting minutes are added as an attachment to the agenda packet.

Mr. Sanderson asked what was being built around the property. Ms. Griffin said LEO Living and Old Tarboro residential.

Ken Weeden asked why the buffer around the rear of the property was being reduced. Ms. Griffin said the applicant would touch more on that topic as the site has topography issues they had to work around.

Chairman Olson asked about lighting for the project. Ms. Griffin said the lighting plan is turned in with construction drawings and that stage has not been reached yet.

Mr. Hardee asked about the minimum parking for this project. Ms. Griffin said the project is meeting the minimum parking requirement and they have 40 parking spaces with two ADA accessible.

John Oglesby with CSD Engineering, 375 E Third St., said he could answer any questions on the project.

Mr. Weeden asked about the reduction in the buffer. Mr. Oglesby said the daycare is Lightbridge Academy. He said the playground and sidewalk requirements for Lightbridge far exceed the states' requirements. Mr. Oglesby said they had to adjust their plans to meet these guidelines. He said they saw the reduction to be possible due to the large open space at the rear of the DR Horton lots that abut the property. Mr. Oglesby said they would still do thick vegetation and a privacy fence. Mr. Oglesby said the fence would be 6 feet.

Mr. Hopkins asked how they would keep this parking lot from becoming a cut through road. Mr. Oglesby said they have made the parking lot a right in and right out to try to eliminate this. He said there probably will be some using it as a cut through, but they've tried hard to prevent that. Mr. Coates said Old Battle Bridge Road is going to be extended by Old Tarboro Townhomes before this project is built so that it should help on people cutting through.

Mr. Sanderson said I move that the Planning Board recommends approval of Zoning Map amendment, CD 25-01, as it is partially consistent with Blueprint Wendell 2030 comprehensive plan and is reasonable and in the public interest because it will likely reduce retail leakage and increase spending on business here. Daycares are in high demand as the Town grows. This site will help local families who might have to go to adjacent

towns to find daycare. Mr. Hardee seconded the motion. All agreed and the motion carried unanimously.

CD25-01: A Request to Rezone Approximately +/- 4.15 Acres from Manufacturing and Industrial (MI) to Downtown Mixed Use Conditional District (DMX-CD) to Construct Third Street Apollo

Planning Director Bryan Coates said the Planning Board is asked to consider the proposed rezoning request and make a recommendation to the Board of Commissioners, to include a statement of plan consistency and reasonableness.

Mr. Coates said the request is to rezone approximately 4.15 acres from Manufacturing and Industrial (MI) to Downtown Mixed Use Conditional District (DMX-CD) to construct Third Street Apollo, a mixed-use development for small businesses, entertainment, dining, office, civic spaces, light manufacturing, and other uses. He said no residential uses are proposed. Mr. Coates said the parcel, owned by 9 N Hollybrook LLC, is located at 9 N Hollybrook Road and can be referred to by PIN 1783 79 7828. He said the Monk Henderson building has also been home to Kemp Furniture, Mortex, and a variety of other businesses. Mr. Coates said the building was built in 1945. He said the development will remove roughly 6,000 square feet of the building to create an open plaza between the two other existing buildings that will remain – one that is 28,254 square feet and the other which is 80,636 square feet. Mr. Coates said parking will also be established on the lot.

Mr. Coates said the property is already in Town limits and as such already receives services from Town departments like the Police and Public Works departments. Mr. Coates said the property is already served by the Wendell-Holmes Fire District. Water and sewer are already provided by the City of Raleigh Public Utilities Department.

Mr. Coates said to the north of the property is the cell tower and the park and ride lot. He said it is zoned MI. Mr. Coates said to the south of the property is the Police Station, Residential areas, Commercial areas and a vacant lot. He said to the south is zoned NC. Mr. Coates said to the east of the property is commercial and it is zoned MI. He said the west of the property is also commercial, but it is zoned DMX.

Mr. Coates said the Downtown Mixed-Use District is coded to encourage the redevelopment and expansion of the traditional Downtown area. He said individual buildings are encouraged to be mixed vertically with street level commercial and upper level residential or commercial uses. Mr. Coates said higher densities of residential development are encouraged. He said the building is existing so there is no requested change to setbacks. Mr. Coates said Mixed Use buildings in the DMX zoning district do not have a front or rear setback minimum but there is a 10-foot maximum front setback.

Mr. Coates said the applicant has proposed the following zoning conditions:

1. Third Street Apollo may consist of the permitted ("P") uses in the Master Plan Table of Allowable Uses and not include those uses indicated as not permitted ("NP"). The additional standards and special use permit requirements contained in Chapter 3 of the Unified Development Ordinance will not be applicable, unless and except the Master Plan Table of Allowable Uses indicates that it is permitted subject to additional standards ("PS").
2. This Master Development Plan for Third Street Apollo is a site-specific Conditional Zoning Plan and is itself a condition of the Conditional District.
3. This Master Development Plan for Third Street Apollo satisfies the requirements set forth in Chapters 3, 4, 5, 7, 8, 9, 10, 11 and 12 of the UDO, including any inconsistent requirement or provision illustrated or depicted therein. Otherwise, the provisions of the UDO shall serve as the prevailing standards which apply to Third Street Apollo. All standards and conditions included within the Master Development Plan and CD application shall supersede any conflicting standards of the UDO.
4. Under circumstances where the Master Development Plan and CD application do not directly address a standard or provision and a UDO provision does, the Zoning Administrator may grant minor deviations (as determined by the Zoning Administrator) from UDO development standards if they are satisfied that doing so will be consistent with the overall intent and approach of the Master Development Plan and CD and not inconsistent with the general objectives of the UDO. Except for substantial changes set forth in Section 15.13.F of the UDO, any changes to the Master Development Plan and CD or subsequent Final Plan are reviewed and approved by the Zoning Administrator.
5. Third Street Apollo and the Master Development Plan require the contemporaneous approval of a Development Agreement by and among Hollybrook Partners LLC, a North Carolina limited liability company and

the Town of Wendell, a municipal corporation of the State of North Carolina, satisfactory to the Applicant which is a condition of this CD application.

6. Third Street Apollo's signage will be governed by Chapter 12 of the UDO and the Master Development Plan, which will fulfill the Town's goal to "promote Wendell's attractiveness to business and people of all walks of life." Third Street Apollo's tenants will comply with section 12.7(C) of the UDO; however, as a building greater than 25,000 square feet with multiple points of entry, the overall signage for Third Street Apollo will be exempt from the maximum area of 200 square feet per façade facing right-of-way and specific applicability maximum percentages of ten percent (10 %) of the front 46 4 building and five percent (5%) of side or rear façade facing right-of-way. Notwithstanding the foregoing, signage for Third Street Apollo will not exceed the maximum area of 300 square feet per façade facing right-of-way. Third Street Apollo's overall signage will be submitted to the Administrator for approval in accordance with Chapter 12.

Mr. Coates went over the table of allowable uses.

Mr. Coates said the applicant will need to confirm whether stormwater and sedimentation-erosion control permits from Wake County Environmental Services are needed before any site work can commence. He said the site will increase in impervious by just over a half-acre. Mr. Coates said Wake County provides stormwater, sedimentation, and erosion control services for the Town of Wendell. He said the proposed plan shows a new underground stormwater control measure beneath the proposed parking lot.

Mr. Coates said buffers are not required between commercial uses; however, the plan does show street trees as required as well as parking lot plantings.

Mr. Coates said the UDO does not require open space dedication for commercial developments.

Mr. Coates said UDO Section 16.3 Environmental Survey requires that all streams, wetlands, floodplains, and other features be shown on preliminary plans. He said there are flood prone soils in the area of the parking lot but there are no floodplains or jurisdictional streams on the property.

He said a TIA was not required for this project as it isn't expected to exceed the number of trips already accounted for with the building's previous use(s). Mr. Coates said the applicant is also proposing to remove roughly 6,000 square feet of building square footage in the renovations thereby reducing the number of possible trips. He said new sidewalk and curb and gutter are proposed along portions of the project frontage on East Third Street.

Mr. Coates said as part of the Developer's Agreement and the Town's Downtown Streetscape project the developer will construct the improvements along Third Street frontage. He said the streetscape design is from the recently approved Downtown Streetscape Plan and will assist with extending the Third Street area of Downtown. Mr. Coates said the applicants' site plan shows the construction of a 63-space parking lot. He said the Town will construct the improvements along the Pine Street frontage per the Developer's Agreement and will also assist with public parking to be built within the railroad right of way. Mr. Coates said the Pine Street streetscape includes a greenway that will connect Downtown with the South Main Street Greenway. He said the Town's parking lot is not fully designed at this time but will be open to the public.

Mr. Coates said the development only has one phase as most of the improvements will be made inside already existing buildings.

Mr. Coates said the Wendell Blueprint 2030 Comprehensive Plan identifies this parcel Downtown Core. He said the proposed project meets characteristics outlined in the descriptions of the Downtown Core place type as it relates to uses, street pattern, street types, connectivity and open space. Mr. Coates said the Third Street Appollo project assists with implementing the small area plan for Downtown from Blueprint Wendell 2030. He said the infill adaptive mixed-use project partnering with the Town will create a new destination for residents and visitors.

Mr. Coates said any recommended change to the zoning map should be accompanied by a statement explaining how the change is/is not consistent with the comprehensive plan and is/is not reasonable in nature. He said the plan is consistent with Blueprint Wendell 2030, and could be considered reasonable as it assists with the plan goal listed below:

- Downtown D1. *Strengthen downtown as the heart and central gathering place of the community*. This plan seeks to create space for numerous small businesses and restaurants and be a hub for entertainment and activity.
- Downtown D2. *Grow downtown as a larger, mixed-use center to better position Wendell as a destination in the region and competitive investment location.* This project itself grows downtown mixed use by more than 100,000 square feet.
- Downtown D2.3 *Participate in efforts to redevelop sites and reuse existing buildings*. The Town is partnering with the developer, through a Developer's Agreement, for improvements including the Downtown Streetscape project with improvements along Pine Street bordering the project.
- Centers of Activity CA1. *Support development of key nodes (large and small).* Consistent with the Future Land Use map, delineate centers of activity where the more intense development includes a mix of uses.
- Centers of Activity CA2. *Amend zoning to accommodate mixed-use development in key nodes*, including downtown. The change in zoning from MI, a manufacturing-based zoning, to Downtown Mixed Use gives the applicant more available uses to create a mixed-use development.
- Historic Preservation H1.1 *Appreciate history*. Built in 1945, the Monk-Henderson building has been the site of some of the town's largest employers and an anchor to the downtown.
- Economic Development E3.7. *Reduce retail leakage and increase spending on businesses here.* The project as proposed will have retail and entertainment uses where citizens can shop and enjoy local stores and entertainment.

Mr. Coates said the applicant held a virtual neighborhood meeting on October 30, 2025. He said two neighbors were in attendance and meeting minutes are added as an attachment.

Mr. Coates said the proposed development is consistent with the Wendell Comprehensive Plan – Blueprint Wendell 2030 and could be considered reasonable since it fulfills the goals of the comprehensive plan noted above and therefore staff recommends approval.

Mr. Sanderson asked about the timeline for the Downtown Streetscape project. Mr. Coates said within the next year. Mr. Sanderson asked if there would be any improvements to Hollybrook Road with this project. Mr. Coates said not at this time but there will be later.

Mr. Hardee asked if there would be any right-of-way dedication with this project. Mr. Coates said there would not be because we already have what we need as the building is an existing building. He said everything could fit in the existing right-of-way.

Cal Cunningham with Cunningham Law spoke on behalf of the applicant. He said they have worked hard to make this project a place for community gathering. Mr. Cunningham said the applicant has worked hard to honor the history of this building and the Town. He said they want to make Apollo a nod to the past and a look to the future. Mr. Cunningham said they are going to work closely with the Town to improve the parking and downtown roads.

Chairman Olson said he appreciates the applicant trying to preserve and make a nod to the Town's history. He asked the applicant not just to acknowledge the history the building holds but to display it around the property and community areas.

Mr. Hardee asked about the large stormwater trench that is running through the property. Mr. Cunningham said they plan to create a trench in that existing channel and run it under the planned parking area. Mr. Hardee asked if there was any existing stormwater trouble on the property now. Mr. Coates said not that he was aware of, but the Downtown Streetscape Plan did have plans stormwater improvement all around Downtown and the streets along this site.

John Oglesby, 375 E Third St., said he applauds the applicant for keeping these historic buildings and preserving part of the Town's history. He said he is looking forward to the community this space will bring to Wendell.

Mr. Sanderson said I move that the Planning Board recommends approval of Zoning Map amendment CD25-06 as it is partially consistent with Blueprint Wendell 2030 Comprehensive Plan and is reasonable and in the public interest because it will likely strengthen downtown as the heart and central gathering place of the community and grow downtown as a larger,

mixed-use center to better position Wendell as a destination in the region and competitive investment location. Mr. Hopkins seconded the motion. All agree unanimously and the motion carried.

R26-01: Request to Rezone Approximately ± 35.44 Acres Located at 2621 North Carolina Highway 97 from Wake County Residential 40 (R40) to Town of Wendell Neighborhood Center (NC)

Planner III Kevin McCarthy said the applicant in this case requests to rezone ± 35.44 acres located at 2621 North Carolina Highway 97 from Wake County Residential 40 (R40) to Town of Wendell Neighborhood Center (NC). He said the property is located near the corner of Mashburn Road and NC 97 and can be identified by PIN 1785417801. Mr. McCarthy said the Wake County Public School System (WCPSS) acquired the property on September 24, 2024. He said the school system intends to develop the site as an elementary school. Mr. McCarthy said concurrently with this request, WCPSS has petitioned for annexation into the corporate limits of Wendell.

Mr. McCarthy said the school system intends to construct a ± 115,000 square foot building with capacity for 800 students in the southwest portion of the property. Mr. McCarthy said primary vehicular access to the property will be from Marshburn Road with emergency access via NC 97. He said, however, NCDOT requested that the applicant evaluate primary access from NC 97. Mr. McCarthy said the recommendations of the Traffic Impact Analysis will influence the final site design decisions. He said the applicant anticipates the school will open in 2030.

Mr. McCarthy said the subject property is located near the corner of Mashburn Road and NC 97. He said another parcel under separate ownership occupies the corner northeast of the subject site. Mr. McCarthy said vacant and active commercial sites under Wake County zoning are located to the north, across NC 97. He said three parcels with frontage along Marshburn Road abut the subject site to the east. Mr. McCarthy said those parcels are occupied by single family homes in Wake County residential districts. He said the abutting properties to the south are also occupied by single family homes and remain under Wake County zoning in residential districts. Mr. McCarthy said the undeveloped properties to the west are within Wake County residential zoning districts. He said the Marshburn Manor 404-unit single-family subdivision is located southeast of the site across Marshburn Road; the Ponder Planned Unit Development

1,903-unit neighborhood is nearby with access directly onto NC 97 through Marshburn Manor.

Mr. McCarthy said a Traffic Impact Analysis is underway and the findings will inform site design and off-site improvements. He said new public schools are unlike other developments. Mr. McCarthy said North Carolina General Statute §160A-307.1 limits the improvements a municipality may require of a new public school within its jurisdiction. He said municipalities must reimburse the school system for the cost of improvements to municipal streets and related right-of-way acquisition. Mr. McCarthy said the cost of roadway improvements associated with the new school will be borne by the Town.

Mr. McCarthy said the school system is requesting a traditional zoning map amendment. He said no conditions have been proposed and no development plans have been submitted at this time. Mr. McCarthy said there is a high degree of certainty that WCPSS will develop the site as an elementary school. He said, however, the UDO permits a wide range of uses in the NC zoning district. Mr. McCarthy said if the Town Board of Commissioners approves the map amendment and the applicant elects not to develop the site, future owners could establish any of the uses permitted by right under the UDO, provided the development conforms to all physical standards of the ordinance.

Mr. McCarthy said the UDO contains special provisions for Civic and Institutional buildings. He said institutional buildings, including schools, serve specialized populations within the community and function as landmarks and public gathering places (UDO §19.3; §5.16). Mr. McCarthy said these structure types are not subject to the same prescriptive bulk standards as commercial and mixed-use buildings. He said the standards for Institutional buildings are in addition to the general building design requirements. Mr. McCarthy said any development of the site must conform to all standards of the UDO.

Mr. McCarthy said the UDO mandates the use of landscaped buffers to separate incompatible adjacent land uses. Mr. McCarthy said at the time of site plan review, a buffer may not be required where the WCPSS property abuts the higher intensity land use.

Mr. McCarthy said Blueprint Wendell 2030 classifies the subject site as Activity Center 2. Mr. McCarthy said the subject site is within a focus area located around the intersection of NC 97 and Marshburn Road. He said the NC 97/Marshburn Road concept depicts a mix of commercial and residential development with civic uses integrated into development accessible to area residents. Mr. McCarthy said the plan emphasizes that the focus area concepts are simply illustrative guides and not rigid prescriptions for development.

Mr. McCarthy said any recommended change to the zoning map should be accompanied by a statement explaining how the change is/is not consistent with the comprehensive plan and is/is not reasonable in nature. He said the applicant requests a traditional zoning map amendment; no conditions have been proposed, and no development plans are under review. Mr. McCarthy said the requested zoning map amendment is consistent with the Activity Center 2 place type in Blueprint Wendell 2030. He said although the place type description does not explicitly list civic uses, it describes a complimentary horizontal mix of uses which includes necessary services like schools. Mr. McCarthy said furthermore, the Marshburn Road/NC 97 focus area description calls for civic uses accessible to area residents. He said the requested zoning map amendment could be considered reasonable as it assists with implementation of plan goals one, three, and five, as well as the associated objectives listed below:

- Goal 1: *Effective Growth Management – To support new growth with adequate infrastructure, which improves the quality of life for residents and provides for a clean and green environment.*
- Goal 5: *Quality of Life + Equity – To be able to offer quality education, bolstering the County's efforts by adding resources to ensure value and increasing engagement with local businesses.*
- Goal 3: *High Level of Connectivity – To connect Wendell to communities in all directions for work, recreation, school, etc.*

Mr. McCarthy said the requested zoning map amendment partially fulfils the following recommended implementation actions of Blueprint Wendell 2030:

- A1. Support development of key nodes
- E3.3 Create space (land and buildings) to meet varied demands
- E3.4 Focus on job creation
- E3.5 Strengthen partnerships with businesses, institutions, and neighboring jurisdictions

Mr. McCarthy said the applicant held a virtual neighborhood meeting on Monday, December 1, 2025, with eight people in attendance. He said resident questions related to potential traffic improvements and clarifications about the annexation and rezoning processes. Mr. McCarthy said minutes from the meeting are included as an attachment.

Mr. McCarthy said the rezoning request is consistent with Blueprint Wendell 2030 and would likely be considered reasonable and therefore said staff recommends approval of the zoning map amendment.

David Bergmark with McAdams spoke on behalf of the applicant, Wake County Public Schools, and said the applicant looked at all the development when choosing where to build this school. Mr. Bergmark said they chose this area to better serve the outer communities of Wendell and meet the school demand. He said they are targeting a 2030 opening date for this school. Mr. Bergmark said this site is more than large enough to accommodate this school and allow for space for cars, buses and playgrounds. He said they would position the school to allow the wetland and other wooded areas on the property to be a natural barrier.

Mr. Hopkins asked about the Town being responsible for building the turn lane and other road improvements. Mr. Bergmark said under General Statues the Town is required to fund road improvements for schools.

Chairman Olson asked about the long-range road improvement plan for Marshburn Road. Mr. McCarthy said both Marshburn Road and NC 97 are four lane throughfares with a 10-foot right-of-way. Mr. Hopkins asked what the timeframe on that would be. Mr. Coates said it would be based on development. He said with the school not planning on being open until 2030, it gives The Town time to prepare and pay for the road improvements.

Mr. Sanderson said I move that the Planning Board recommends approval of Zoning Map amendment, R26-02, as it is consistent with Blueprint Wendell 2030 comprehensive plan and is reasonable and in the public interest because it will likely support development key nodes (large and small). Consistent with Future Land Use map, delineate centers of activity

where the more intense development includes a mix of uses. Mr. Hardee seconded the motion. All were in favor, the motion carried unanimously.

4. Planning Director Updates

Mr. Coates gave an update on the Traffic Calming Study for Hollybrook Road, Big Falls and Taylor Road. He said the Town is in the public input stage of the plan, and would be hosting neighborhood meetings to hear from the public. Mr. Coates said so far, they have heard speed reduction and more crosswalks for pedestrians as the top two requests from the public.

Mr. Coates said staff has meetings this week on the UDO with the Commissioners and the consultant. He said this meeting is to get an idea of the priorities and to start setting up the Steering Committee.

Chairman Olson asked for an update on the Main Street project (Downtown Streetscape). Mr. Coates said that Pine Street will be the first street in the project. He said then they will likely continue to do the other exterior roads. Mr. Coates said by doing it this way, when it is time to do Main Street there will be less impact to businesses, as there will be parking and other updates close by.

Chairman Olson asked about how to get underground utilities. Mr. Coates said the UDO does require many underground utilities, but that Duke Energy also has their own standards that have be implemented too. He said Duke and other utilities companies are partnering with the Town for Downtown Streetscape.

Adjourn

Mr. Sanderson made the motion to adjourn the meeting. Mr. Weeden seconded the motion. All were in favor and the meeting adjourned at 8:16 pm.

AGENDA ITEM NO. 3.a

Item Cover Page

PLANNING BOARD AGENDA ITEM REPORT

DATE:	June 15, 2026
SUBMITTED BY:	Jeannine Ngwira , Planning
ITEM TYPE:	Rezoning
AGENDA SECTION:	NEW BUSINESS
SUBJECT:	CD25-02 – A Request to Rezone Approximately +/- 6.25 Acres from Rural Agricultural (RA) to Neighborhood Center Conditional District (NC-CD) to Create Jake May Mixed-Use Development Phase 2
SPECIFIC ACTION REQUESTED:	The Planning Board is asked to consider the proposed rezoning request and make a recommendation to the Board of Commissioners, to include a statement of plan consistency and reasonableness.
ITEM SUMMARY:	The request is to rezone approximately 6.25 acres at 0 Wendell Falls Parkway (PIN 1773979663) from Rural Agricultural (RA) to Neighborhood Center Conditional District (NC-CD) to create Jake May Mixed-Use Phase 2. The parcel is owned by KYSR Investments, LLC. The proposed mixed-use development will contain three 4-story buildings with a mix of commercial uses and 115 multi-family units. The project will connect to Jake May Mixed-Use Phase 1 to the east.

ATTACHMENTS:

CD25-02 Jake May Mixed Use Phase 2 Staff Report-
CD25-02 Jake May Mixed Use Phase 2 Planning Board Set.pdf
Jake May Mixed Use Ph 2 - Virtual Neighborhood Meeting Minutes 1.29.26
TIA - Jake May Mixed Use Phase 2

Planning

Staff Analysis

Item Title: CD25-02 – A Request to Rezone Approximately +/- 6.25 Acres from Rural Agricultural (RA) to Neighborhood Center Conditional District (NC-CD) to Create Jake May Mixed-Use Development Phase 2

Specific Action Requested:

The Planning Board is asked to consider the proposed rezoning request and make a recommendation to the Board of Commissioners, to include a statement of plan consistency and reasonableness.

Item Summary:

The request is to rezone approximately 6.25 acres at 0 Wendell Falls Parkway (PIN 1773979663) from Rural Agricultural (RA) to Neighborhood Center Conditional District (NC-CD) to create Jake May Mixed-Use Phase 2. The parcel is owned by KYSR Investments, LLC.

The proposed mixed-use development will contain three 4-story buildings with a mix of commercial uses and 115 multi-family units.

The project will connect to Jake May Mixed-Use Phase 1 to the east.

Project Setting – Surrounding Districts and Land uses:

DIRECTION	LANDUSE	ZONING
North	Residential	R7-CD
South	Residential	R7-CD
East	Residential	NC-CD
West	Vacant	RA

To the north is the Porters Landing residential community and Buffalo Station Mixed-Use development which will include a 1.29-acre commercial outparcel. To the east is the first phase of Jake May Mixed-Use Development which will have a minimum of 6,000 square feet of commercial space and multi-family housing. To the south is the Fairway Crossing neighborhood of single family homes and to the west is a vacant parcel. Further to the west, at the Eagle Rock Road and Wendell Falls Parkway intersection, a 50,000+ square foot Lowe's Foods is under construction along with several outparcels totaling roughly 25,000 square feet of commercial space.

Zoning Map

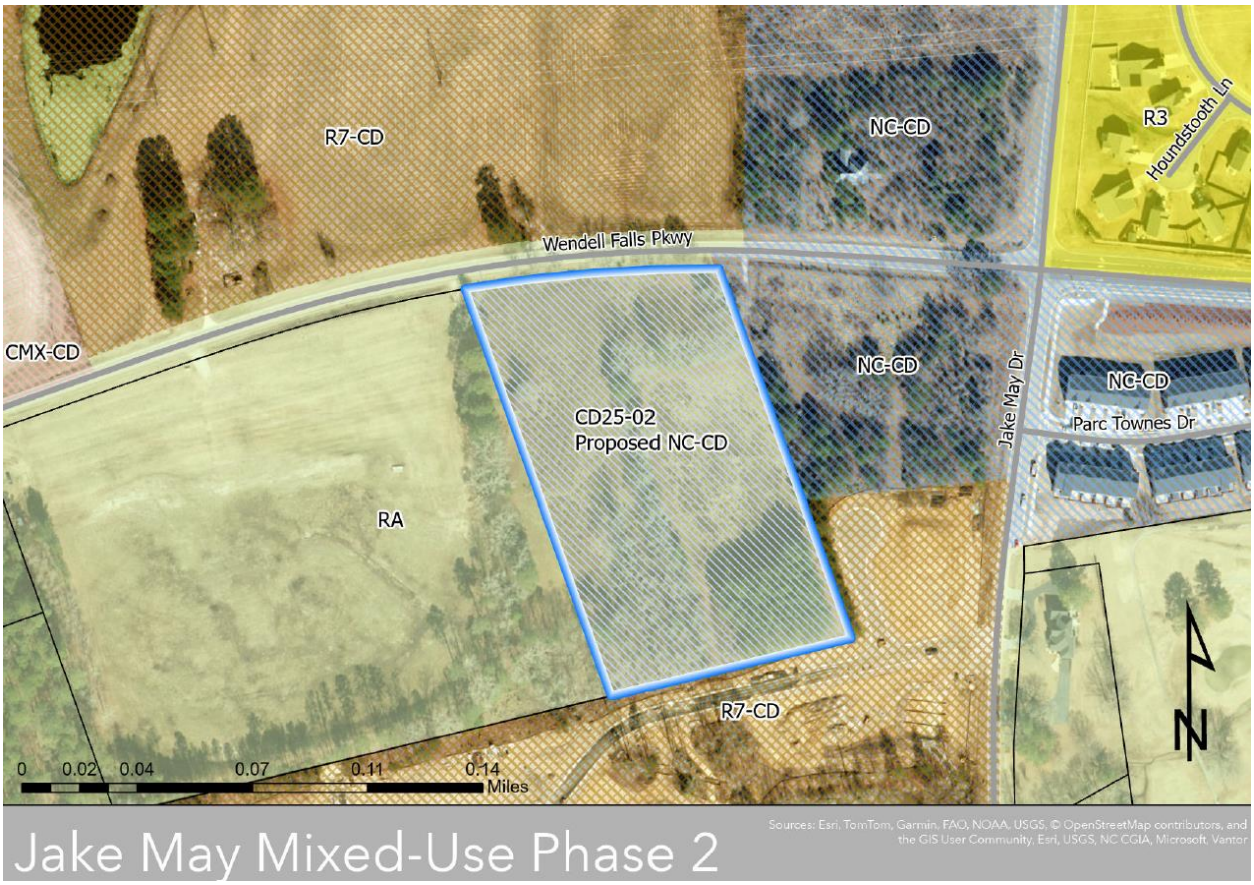

Zoning District

The Neighborhood Center District is coded to provide for areas for residential and mixed-use development in close proximity to existing and planned neighborhood centers. The intent is to create higher density residential areas that complement commercial districts with physical proximity and pedestrian connectivity. Different housing types and lot styles are encouraged. Development in this district should encourage pedestrian use through connections to adjacent neighborhoods and the construction of mixed-use buildings.

The applicant is meeting the required setbacks for the Commercial/Mixed-Use Buildings and Apartment Buildings in the NC district.

Proposed Zoning Conditions

The applicant has proposed the following zoning conditions:

1. The following uses are permitted by right: Dwelling – Multi-family Residential; Child/Adult Day Care Center; Brewery/Distillery; General Retail – 10,000 sf to 50,000 sf; Bar/Tavern; Event Venue, Outdoor

2. There shall be a maximum of 135 residential units, and the rest of the floor space shall be for non-residential uses.
3. Maximum building height shall be four (4) stories.
4. The architectural style and materials of the buildings shall substantially match and coordinate with the architectural style and materials of any existing buildings on the adjacent property located at 0 Wendell Falls Pkwy (Deed Book 19302/Page 1477).
5. A 10-foot multi-use path shall be provided along Wendell Falls Parkway. The path may utilize the use of a public access easement along the property frontage to accommodate the full 10-foot path section. The subject property shall reserve the right to utilize a portion of the path and public access easement for property maintenance for items such as the proposed stormwater facility of public utilities.
6. The Gateway Overlay streetyard buffer shall be a minimum of 10 feet wide.
7. The development shall include at least one (1) mixed-use building and one (1) multi-family residential building, as defined in Section 19.3 of the UDO, each to be a minimum of two (2) stories. At least 3,000 sf of non-residential uses shall be included in the development.
8. The Type B perimeter buffer may be reduced to 10 feet on the southern and eastern property lines adjacent to PIN 1773968771 (DB 019030/Page 02370) to accommodate necessary maintenance easements and infrastructure to serve the development.
9. The development shall provide a stub to the adjacent property located at 0 Wendell Falls Pkwy (Deed Book 19302/Page 1477) and shall use all reasonable efforts to obtain a cross-access easement and provide cross access between the developments.
10. In recognition that, given the small size and mixed-use nature of the proposed development, it will be served by private vehicular access and pedestrian pathways, the following modifications to the Unified Development Ordinance (UDO) shall apply to the development of the property:
    A. UDO Section 7.3.B.1: Open space does not need to have frontage on a public street.
    B. UDO Section 5.12.C: Primary entrances for mixed-use buildings do not have to face a public street.
    C. UDO Section 7.6: The Town shall accept a payment in lieu of open space dedication, as established in the Town of Wendell fee schedule, for up to 80 residential units.

Environmental

The applicant will need to obtain stormwater and sedimentation-erosion control permits from Wake County Environmental Services before any site work can commence. The proposed development plan must meet the requirements of the UDO. Wake County provides stormwater, sedimentation, and erosion control services for the Town of Wendell.

- The proposed plans show the development of one stormwater control measure.

Buffers

When a commercial use borders a single-family residential use, a 20-foot Type B buffer is required. The applicant requests per Condition #8 the Type B perimeter buffer may be reduced to 10 feet on the southern and eastern property lines adjacent to the Fairway Crossing residential community, to accommodate necessary maintenance easements and infrastructure to serve the development. The buffer bordering Fairway Crossing abuts roads and open space. No home lots are along the border to the project.

- A Type B buffer is 20 feet wide and contains a tree every 25 feet and a shrub every 6 feet.

A 10-foot Type C buffer is required along the western border since the adjacent property is vacant.

- A Type C buffer is 10 feet wide and contains a tree every 40 feet and a shrub every 8 feet.

Per UDO Section 2.17 this parcel is in the Gateway Overlay and requires a 20-foot street yard buffer. The applicant is requesting per Condition #6 that the street yard buffer be reduced to a minimum of 10 feet wide.

- Gateway Overlay Street yard plantings are installed at a rate of three canopy trees or six understory trees and 12 shrubs per 100 linear feet.

Open Space

The open space dedication required for multi-family is 500 square feet per unit. Due to the small size and mixed-use nature of the subject parcel, the applicant has requested via Condition #10C, that the Town accept a fee-in-lieu of open space dedication for 80 multi-family units. The open space fee-in-lieu for multi-family is $2,500 per unit, totaling $200,000 for 80 units.

There is no open space dedication required for commercial uses.

Streams and Wetlands

UDO Section 16.3 Environmental Survey requires that all streams, wetlands, floodplains, and other features be shown on preliminary plans.

- There are no streams, wetlands or floodplains on this property.

Transportation

When projects are anticipated to have more than 100 peak hour trips or 1,000 daily trips, the UDO requires a Transportation Impact Analysis. A TIA was completed for this project with an anticipated 230 AM peak hour trips and 376 PM peak hour trips. The TIA yielded 4,326 daily trips.

The TIA contains the following roadways and improvements:

- Monitor the intersection of Jake May Drive and Wendell Falls Parkway for a signal.
- A right turn lane from eastbound Wendell Falls Parkway into Site Access 1 (the eastern site entrance in Jake May Phase 1).
- A driveway at Site Access 1 that allows a right turn only onto eastbound Wendell Falls Parkway.
- A driveway that allows right and left turn movements onto Jake May Drive.
- The TIA showed 3 configurations for Site Access 3 (western site entrance) on Wendell Falls Parkway with associated improvements: Right-in/Right-out, Directional Cross Over and Full Movement. After discussions with NCDOT, it was decided that the Directional Cross Over was the best option for this site and is shown in the Master Plan set with the following:
    - Directional Cross Over:
        - A right turn lane with 100 feet of queueing from eastbound Wendell Falls Parkway into Site Access 3.
        - A driveway at Site Access 3 that allows a right turn only onto eastbound Wendell Falls Parkway.
        - A left turn lane from westbound Wendell Falls Parkway into Site Access 3.

In the Arterial & Collector Street Plan, this section of Wendell Falls Parkway starting from Jake May Drive to the I-87 interchange, is a future four-lane divided roadway with a 110-foot right-of-way which includes 12-foot travel lanes, 5-foot bike lanes, 6-foot sidewalks and street trees. The developer is proposing a 10-foot multi-use path.

Phasing

The development only has only phase.

Comprehensive Plan

The Wendell Blueprint 2030 Comprehensive Plan identifies this parcel as Activity Center 2.

ACTIVITY CENTER 2

AC-2

This area encourages the blending of complementary commercial, office and a mix of residential housing types. These areas typically offer a horizontal mix of uses where changes in use occur between adjacent buildings. Buildings are typically one and two stories. Designed to facilitate access via walking and biking, mixed-use areas should be located where access via the road network, sidewalks, greenways, and/or local shuttle/circulator service is feasible.



USES + BUILDINGS

- *Grocery stores*
- *Pharmacies*
- *Retail*
- *Restaurants*
- *Gyms, Fitness studios*
- *Personal services (branch banks, dry cleaners, tailors, hair and nail salons)*
- *Small to medium-sized offices*
- *Medical (office, urgent care)*
- *Attached single-family (Townhome)*
- *Multi-family (Condominiums, apartments)*
- *Event spaces such as greens or amphitheaters*

STREET PATTERN

Street Pattern: *Grid, Modified Grid*
Max Block Length: *500'*
Connectivity:

- *Moderately connected externally (to adjacent development and roadways)*
- *High internal connectivity with many pedestrian amenities*

Street Types:

- *Private*
- *Local 2-lane with on-street parking*
- *Collector*

OPEN SPACE

- *Walking and biking paths and trails*
- *Courtyards and gathering spaces*
- *Stormwater as an amenity (to include trails, green space, recreation)*

The proposed project meets characteristics outlined in the description of the Activity Center – 2 placetype as it relates to buildings, uses, connectivity and open space.

Statement of Plan Consistency and Reasonableness

Any recommended change to the zoning map should be accompanied by a statement explaining how the change is/is not consistent with the comprehensive plan and is/is not reasonable in nature.

The proposed rezoning is consistent with Blueprint Wendell 2030, it could be considered reasonable as it assists with the plan goal listed below:

- Centers of Activity CA1. *Support development of key nodes (large and small)* where commercial uses can be concentrated and benefit from proximity to each other. Consistent with the Future Land Use map, delineate centers of activity where the more intense development includes a mix of uses that can be accommodated. This development is adjacent to developments designated as Activity Center 1.
- Economic Development E3.7. *Reduce retail leakage and increase spending on businesses here*. Condition #1 allows Child/Adult Day Care Center, Brewery/Distillery, General Retail, Bar/Tavern and Outdoor Event Venue by right.
- Neighborhoods & Housing NH3. *Diversify housing to appeal to different age groups: age, income lifestyle preferences, family situations.*

Neighborhood Meeting

The applicant held a virtual neighborhood meeting on January 29, 2026. No neighbors were in attendance. Meeting notes are added as an attachment.

Technical Review Committee (TRC) Comments:

The Technical Review Committee has completed their review of the applicant's Master Plan and the applicant has made corrections based on their comments. Additional review would occur upon submittal of construction drawings (final development plan for conditional districts).

Staff Comments:

The proposed development is consistent with the Wendell Comprehensive Plan – Blueprint Wendell 2030 and can be considered reasonable since it fulfills the goals of the comprehensive plan noted above and therefore staff recommends approval.

MASTER PLAN DRAWINGS FOR:

JAKE MAY MIXED-USE PHASE #2

0 WENDELL FALLS PARKWAY
WENDELL, NC 27591

CASE # CD25-02

SITE DATA TABLE

PROJECT NAME:	JAKE MAY MIXED-USE DEVELOPMENT PHASE #2
REZONING CASE NUMBER:	CD25-02
PROPERTY OWNER:	KYSR INVESTMENTS, LLC - 242 GREAT BYNUM DR, APEX, NC 27523
DEVELOPER:	KYSR INVESTMENTS, LLC - 242 GREAT BYNUM DR, APEX, NC 27523
PIN ID:	1773979663
DEED BOOK & PAGE	DB0019920 PG 00315
PLAT BOOK & PAGE	PB: BM 2025 PG: 00933
DEED ACRES:	6.0 (TOTAL PARCEL)
REZONING/DEVELOPMENT ACREAGE:	6.0
ACREAGE AFTER ROW DEDICATION:	5.8
PROPERTY ADDRESS:	0 WENDELL FALLS PARKWAY WENDELL, NC 27591
EXISTING ZONING:	RA
PROPOSED ZONING	NC-CD
CURRENT USE:	VACANT
PROPOSED USE:	MIXED-USE DEVELOPMENT
DISTURBED AREA:	6.08 AC
FEMA FLOOD HAZARD MAP	SITE NOT LOCATED IN FLOOD HAZARD AREA PER FEMA MAP#: 3720117830OL AND FEMA MAP#: 3720177300K (EFFECTIVE 7/19/22)
IMPERVIOUS AREAS:	PARKING: 159,110 SF (3.65 AC) SIDEWALKS: 7,190 SF (0,17 AC) BUILDINGS: 44,810 SF (1.03 AC) TOTAL ON-SITE IMPERVIOUS AREA: 211,110 SF (4.85 AC) TOTAL ON-SITE IMPERVIOUS PERCENT: 79.5%
TOTAL HOUSING UNITS:	TOTAL UNITS: 135 UNITS (AS ALLOWED PER CONDITION 2)
BUILDING BREAKDOWN:	BUILDING 1: 10,010 SF (1st FLOOR) 24 MF UNITS (2-4 FLOORS) BUILDING 2: 8,400 SF MEDICAL OFFICE (1st FLOOR) 15 MF UNITS (2-4 FLOORS) BUILDING 3: 76 MF UNITS (1-4 FLOORS)
GROSS DENSITY:	115 UNITS/5.8 ACRES = 19.83 UNITS/ACRE (AS SHOWN) 135 UNITS/5.8 ACRES = 23.28 UNITS/ACRE (AS ALLOWED BY CONDITION 2)
PARKING REQUIREMENTS: (AS SHOWN IN MASTERPLAN; SUBJECT TO CHANGE PER FINAL RESIDENTIAL AND NON-RESIDENTIAL UNIT/SF COUNT DURING SITE PLAN)	RESIDENTIAL: 1 SPACE/BEDROOM; UP TO 2 SPACES/ UNIT 1-BEDROOM: 10 UNITS X 1 = 10 SPACES 2-BEDROOM: 95 UNITS X 2 = 190 SPACES 3-BEDROOM: 10 UNITS X 2 = 20 SPACES TOTAL: 220 SPACES RETAIL:2-3.33 SPACES / 1,000 SF - 10,010 SF / 1,000 X 2 SPACES = 20 SPACES OFFICE : 2-33 SPACES /1,000 SF - 8,400 SF / 1,000 X 2 SPACES = 17 SPACES BICYCLE: 1 SPACE/ 20 CAR SPACES = 13 SPACES TOTAL PARKING SPACES REQUIRED: 257 SPACES TOTAL PARKING SPACES PROVIDED: 257 SPACES (100%)
LINEAR FEET OF NEW STREETS:	0-FT
RIVER BASIN:	NEUSE RIVER BASIN
SURFACE WATER CLASSIFICATION:	B;NSW
FRONT SETBACK (MIN):	COMMERCIAL/MIXED-USE = 0-FT APARTMENT = 0-FT (10-FT)(A)
FRONT SETBACK (MAX):	COMMERCIAL/MIXED-USE = 10-FT APARTMENT = N/A
SIDE SETBACK (MIN):	COMMERCIAL/MIXED-USE = 0-FT WITHIN DEVELOPMENT; 5-FT OTHERWISE APARTMENT = 10-FT BETWEEN BUILDINGS
REAR SETBACK (MIN):	COMMERCIAL/MIXED-USE = 0-FT APARTMENT = 0-FT
REAR SETBACK FROM REAR LANE / ALLEY (MIN):	COMMERCIAL/MIXED-USE = 0-FT APARTMENT = 15-FT FROM CENTERLINE
ACCESSORY STRUCTURE SIDE/REAR SETBACK (MIN):	COMMERCIAL/MIXED-USE = 0-FT APARTMENT = 5-FT
WEST BUFFER	10' TYPE 'C' BUFFER
SOUTH BUFFER	20' TYPE 'B' BUFFER (SEE CONDITION 8C)
EAST BUFFER	20' TYPE 'B' BUFFER (SEE CONDITION 8C)
OPEN SPACE REQUIREMENTS:	OFFICE/COMMERCIAL: N/A RESIDENTIAL: 500 SF x DU (115)=57,500 SF OPEN SPACE REQUIRED AMENITY AREA OPEN SPACE:12,250.00 SF OPEN SPACE MINI PARK = 4,900 SF ACTIVE OPEN SPACE REQUIRED (57,500 X 33%) = 18,975 SF ACTIVE OPEN SPACE PROVIDED = 12,250 SF(AMENITY SPACE) INDOOR ACTIVE SPACE = 5,000 SQFT (INDOOR GYM) OPEN SPACE PROVIDED =22,400 SF (40%) A FEE IN LIEU WILL BE PAID FOR OPEN SPACE FOR UP TO 80 UNITS PER CONDITION 8.C.



VICINITY MAP

SCALE: 1"=300'

Sheet List Table

Sheet Number	Sheet Title
C0.0	COVER SHEET
C1.0	DEMO PLAN
C2.0	SITE PLAN
C2.1	CONCEPTUAL ROAD IMPROVEMENTS
C3.0	UTILITY PLAN
C3.1	FIRE HOSELAY PLAN
C4.0	SITE DETAILS
C4.1	SITE DETAILS
C4.2	SITE DETAILS
C4.3	SITE DETAILS
C4.4	SITE DETAILS
L1.0	LANDSCAPE
L1.1	LANDSCAPE DETAILS
A201	BUILDING A EXTERIOR ELEVATIONS
A202	BUILDING A EXTERIOR ELEVATIONS
A203	BUILDING B EXTERIOR ELEVATIONS
A204	BUILDING B EXTERIOR ELEVATIONS
A205	BUILDING C EXTERIOR ELEVATIONS
A206	BUILDING C EXTERIOR ELEVATIONS

PROJECT TEAM

OWNER
KYSR INVESTMENTS, LLC
RAGHU REDDY
242 GREAT BYNUM DRIVE
APEX, NC 27523

ARCHITECT
COREY BATES
NEW CITY DESIGN GROUP
1304 HILLSBOROUGH STREET
RALEIGH, NC 27605

CIVIL ENGINEER / LANDSCAPE ARCHITECT
GARRETT FRANK, PE, PLA
FRANK LAND DESIGN, PC
PHONE: 919-698-6883
120 MOSAIC BLVD; SUITE 200-21
PITTSBORO, NC 27312

City of Raleigh Public Utilities Department

Preliminary approval only. Does not constitute construction approval for any proposed water or sewer main extensions. Valid only with signature of a City of Raleigh Review Officer. This electronic approval may not be edited once issued. Any modification to this approval once issued will invalidate this approval.

CONDITIONS OF REZONING

1. THE FOLLOWING USES ARE PERMITTED BY RIGHT: DWELLING - MULTI-FAMILY RESIDENTIAL; CHILD/ADULT DAY CARE CENTER; BREWERY/DISTILLERY; GENERAL RETAIL - 10,000 SF OR LESS; GENERAL RETAIL - 10,000 SF TO 50,000 SF; BAR/TAVERN; EVENT VENUE, OUTDOOR
2. THERE SHALL BE A MAXIMUM OF 135 RESIDENTIAL UNITS, AND THE REST OF THE FLOOR SPACE SHALL BE FOR NONRESIDENTIAL USES.
3. MAXIMUM BUILDING HEIGHT SHALL BE FOUR (4) STORIES.
4. THE ARCHITECTURAL STYLE AND MATERIALS OF THE BUILDINGS SHALL SUBSTANTIALLY MATCH AND COORDINATE WITH THE ARCHITECTURAL STYLE AND MATERIALS OF ANY EXISTING BUILDINGS ON THE ADJACENT PROPERTY LOCATED AT 0 WENDELL FALLS PKWY (DEED BOOK 19302/PAGE 1477).
5. A 10-FOOT MULTI-USE PATH SHALL BE PROVIDED ALONG WENDELL FALLS PARKWAY. THE PATH MAY UTILIZE THE USE OF A PUBLIC ACCESS EASEMENT ALONG THE PROPERTY FRONTAGE TO ACCOMMODATE THE FULL 10-FOOT PATH SECTION. THE SUBJECT PROPERTY SHALL RESERVE THE RIGHT TO UTILIZE A PORTION OF THE PATH AND PUBLIC ACCESS EASEMENT FOR PROPERTY MAINTENANCE FOR ITEMS SUCH AS THE PROPOSED STORMWATER FACILITY OF PUBLIC UTILITIES.
6. THE GATEWAY OVERLAY STREETYARD BUFFER SHALL BE A MINIMUM OF 10 FEET WIDE.
7. THE DEVELOPMENT SHALL INCLUDE AT LEAST ONE (1) MIXED-USE BUILDING AND ONE (1) MULTI-FAMILY RESIDENTIAL BUILDING . AS DEFINED IN SECTION 19.3 OF THE UDO, EACH TO BE A MINIMUM OF TWO (2) STORIES. AT LEAST 3,000 SF ON NONRESIDENTIAL USES SHALL BE INCLUDED IN THE DEVELOPMENT.
8. THE TYPE B PERIMETER BUFFER MAY BE REDUCED TO 10 FEET ON THE SOUTHERN AND EASTERN PROPERTY LINES ADJACENT TO PIN 1773968771 (DB 019030/PAGE 02370) TO ACCOMMODATE NECESSARY MAINTENANCE EASEMENTS AND INFRASTRUCTURE TO SERVE THE DEVELOPMENT.
9. THE DEVELOPMENT SHALL PROVIDE A STUB TO THE ADJACENT PROPERTY LOCATED AT 0 WENDELL FALLS PKWY (DEED BOOK 19302/PAGE 1477), AND SHALL USE ALL REASONABLE EFFORTS TO OBTAIN A CROSS ACCESS EASEMENT AND PROVIDE CROSS ACCESS BETWEEN THE DEVELOPMENTS.
10. IN RECOGNITION THAT, GIVEN THE SMALL SIZE AND MIXED-USE NATURE OF THE PROPOSED DEVELOPMENT, IT WILL BE SERVED BY PRIVATE VEHICULAR ACCESS AND PEDESTRIAN PATHWAYS, THE FOLLOWING MODIFICATIONS TO THE UNIFIED DEVELOPMENT ORDINANCE ("UDO") SHALL APPLY TO THE DEVELOPMENT OF THE PROPERTY:
    A. UDO SECTION 7.3.B.1: OPEN SPACE DOES NOT NEED TO HAVE FRONTAGE ON A PUBLIC STREET.
    B. UDO SECTION 5.12.C: PRIMARY ENTRANCES FOR MIXED-USE BUILDINGS DO NOT HAVE TO FACE A PUBLIC STREET.
    C. UDO SECTION 7.6: THE TOWN SHALL ACCEPT A PAYMENT IN LIEU OF OPEN SPACE DEDICATION, AS ESTABLISHED IN THE TOWN OF WENDELL FEE SCHEDULE, FOR UP TO 80 RESIDENTIAL UNITS.

RW CONDITIONS OF APPROVAL

1. THIS PROJECT REQUIRES CONSTRUCTION DRAWING APPROVAL (FOR PUBLIC WATER / SEWER OR PRIVATE SEWER PERMITS) PRIOR TO PLAT RECORDATION.
2. PLAT RECORDATION (FOR SUBDIVISION / RECOMBINATION OR EASEMENT DEDICATION) IS REQUIRED PRIOR TO ISSUANCE OF 1ST UTILITY CONNECTION / BLDG PERMIT.
3. A COC FOR MASTER BFP DEVICE (SIGNED BY DESIGNER & APPROVED BY PU CROSS-CONNECTION COORDINATOR) MUST BE OBTAINED & AFFIXED TO PLUMBING OR FIRE PLAN PRIOR TO ISSUANCE OF UC/BLDG PERMITS.

HTTPS://RALEIGHNC.GOV/SUPPOSRTPAGES/CERTIFICATION-COMPLIANCE
(JOANIE HARTLEY@RALEIGHNC.GOV)

4. A FOG APPROVAL LETTER FOR GREASE TRAP OR OIL-WATER SEPARATOR CALCULATIONS & DETAILS MUST BE OBTAINED & AFFIXED TO PLUMBING PLANS PRIOR TO ISSUANCE OF UC/ BLDG PERMITS.

HTTPS://RALEIGHNC.GOV/BUSINESS/CONTENT/PLANDEV/ARTICLES/DEVSERV/GREASEANDOILINTERCEPTORS.HTML
(STEPHEN.CALVERLEY@RALEIGHNC.GOV)

WAKE COUNTY WATERSHED MANAGEMENT

- A SEPARATE EROSION & SEDIMENT CONTROL PLAN SUBMITTAL IS REQUIRED TO WAKE COUNTY THROUGH THE COUNTY'S ONLINE PERMIT PORTAL.
- A SEPARATE STORMWATER MANAGEMENT PLAN SUBMITTAL IS REQUIRED TO WAKE COUNTY THROUGH THE COUNTY'S ONLINE PERMIT PORTAL. STORMWATER REGULATIONS MUST ADHERE TO THE TOWN OF WENDELL'S STORMWATER ORDINANCE (*CHAPTER 6.5 STORMWATER RUNOFF PROVISIONS: POST-CONSTRUCTION STORMWATER ORDINANCE*)
- WAKE COUNTY MUNICIPAL HYBRID STORMWATER TOOL IS REQUIRED TO BE COMPLETED.
- PROVIDE AND LABEL ACCESS AND MAINTENANCE EASEMENT AROUND UNDERGROUND STORM FILTER AND DETENTION TANK.
- PROVIDE A CONSTRUCTION DETAIL FOR UNDERGROUND STORM FILTER AND DETENTION TANK.

BARNEY BLACKBURN

WAKE COUNTY FIRE NOTES

503.1.1 - "APPROVED FIRE APPARATUS ACCESS ROADS SHALL BE PROVIDED FOR EVERY FACILITY, BUILDING, OR PORTION OF A BUILDING HEREAFTER CONSTRUCTED OR MOVED INTO OR WITHIN THE JURISDICTION. THE FIRE APPARATUS ACCESS ROAD SHALL COMPLY WITH THE REQUIREMENTS OF THIS SECTION AND SHALL EXTEND TO WITHIN 150 FEET (45,720 MM) OF ALL PORTIONS OF THE FACILITY AND ALL PORTIONS OF THE EXTERIOR WALLS OF THE FIRST SOTRY OF THE BUILDING AS MEASURED BY AN APPROVED ROUTE AROUND THE EXTERIOR OF THE BUILDING OR FACILITY.
503.2.1 - FIRE APPARATUS ACCESS ROADS SHALL HAVE AN UNOBSTRUCTED WIDTH OF NOT LESS THAN 20 FEET, EXCLUSIVE OF SHOULDERS, EXCEPT FOR APPROVED SECURITY GATES IN ACCORDANCE WITH SECTION 503.6 AND AN UNOBSTRUCTED VERTICAL CLEARANCE OF NOT LESS THAN 13 FEET 6 INCHES.
503.2.2 - THE FIRE CODE OFFICIAL SHALL HAVE THE AUTHORITY TO REQUIRE OR PERMIT MODIFICATIONS TO THE REQUIRED ACCESS WIDTHS WHERE THEY ARE INADEQUATE FOR FIRE OR RESCUE OPERATIONS OR WHERE NECESSARY TO MEET THE PUBLIC SAFETY OBJECTIVES OF THE JURISDICTION.
** REFER TO SECTION D105, AERIAL FIRE APPARATUS ACCESS ROADS, IN THE 2018 NC FIRE CODE AS A GUIDE TO MEET THESE ADDITIONAL REQUIREMENTS FOR MULTISTORY BUILDINGS.
503.2.3 - FIRE APPARATUS ACCESS ROADS SHALL BE DESIGNED AND MAINTAINED TO SUPPORT THE IMPOSED LOADS OF FIRE APPARATUS AND SHALL BE SURFACED SO AS TO PROVIDE ALL-WEATHER DRIVING CAPABILITIES.
** THE PARKING LOT SURFACE SHALL BE HEAVY DUTY CONCRETE TO MEET THE IMPOSED LOADS OF FIRE APPARATUS AS THIS IS PART OF THE FIRE APPARATUS ACCESS (80,000 POUND MINIMUM).
503.3 - "WHERE REQUIRED BY THE FIRE CODE OFFICIAL, APPROVED SIGNS OR OTHER APPROVED NOTICES OR MARKINGS THAT INCLUDE THE WORDS NO PARKING-FIRE LANE SHALL BE PROVIDED FOR FIRE APPARATUS ACCESS ROADS TO IDENTIFY SUCH ROADS OR PROHIBIT THE OBSTRUCTION THEREOF. THE MEANS BY WHICH FIRE LANES ARE DESIGNATED SHALL BE MAINTAINED IN A CLEAN AND LEGIBLE CONDITION AT ALL TIMES AND BE REPLACED OR REPAIRED WHEN NECESSARY TO PROVIDE ADEQUATE VISIBILITY."
** ALL FDC (FIRE DEPARTMENT CONNECTIONS) SHALL HAVE A DEICATED HYDRANT IN ADDITION TO ALL REULARLY SPACED HYDRANTS.

I hereby certify that this Plan was approved by the (Administrator) or (TRC) of the Town of Wendell on the _____ day of _____ 20__.

_____
Administrator

FRANK LAND DESIGN, PC
UNIQUE SOLUTIONS: YOUR VISION, OUR EXPERTISE
120 MOSAIC BLVD; SUITE 200-47, PITTSBORO, NC 27312 | LICENSE #C-5114 | WWW.FRANKLANDDESIGN.COM

PRELIMINARY

NORTH CAROLINA PROFESSIONAL SEAL 055780 ENGINEER GARRETT W. FRANK

NOT FOR CONSTRUCTION

LANDSCAPE ARCHITECTURE | CIVIL ENGINEERING

REVISIONS:	
11.13.25	1ST ROUND MP COMMENT REVISIONS
01.28.26	2ND ROUND MP COMMENT REVISIONS
03.06.26	3RD ROUND MP COMMENT REVISIONS
03.27.26	4TH ROUND MP COMMENT REVISIONS

CHECKED BY: G.FRANK	DATE: 04.30.2025
DESIGN / DRAWN BY: JLA	SCALE: SEE PLANS

JAKE MAY MIXED-USE PHASE #2
WAKE COUNTY, NC
0 WENDELL FALLS PARKWAY, WENDELL, NC 27591

COVER SHEET

ISSUED FOR:	MASTER PLAN
JOB NO.	1013
SHEET NO.	C0.0

These plans and associated documents are the exclusive property of FRANK LAND DESIGN, PC and may not be reproduced in whole or in part and shall not be used for any purpose whatsoever, inclusive, but not limited to construction, bidding, and/or construction staking without the express written consent of FRANK LAND DESIGN, PC.

Z:\1013-Jake_May_6-Acre_MU\DWG\Sheet\CD\1013-C0.0-COVR.dwg | Plotted on 4/28/2026 4:24 PM | by Garrett Frank

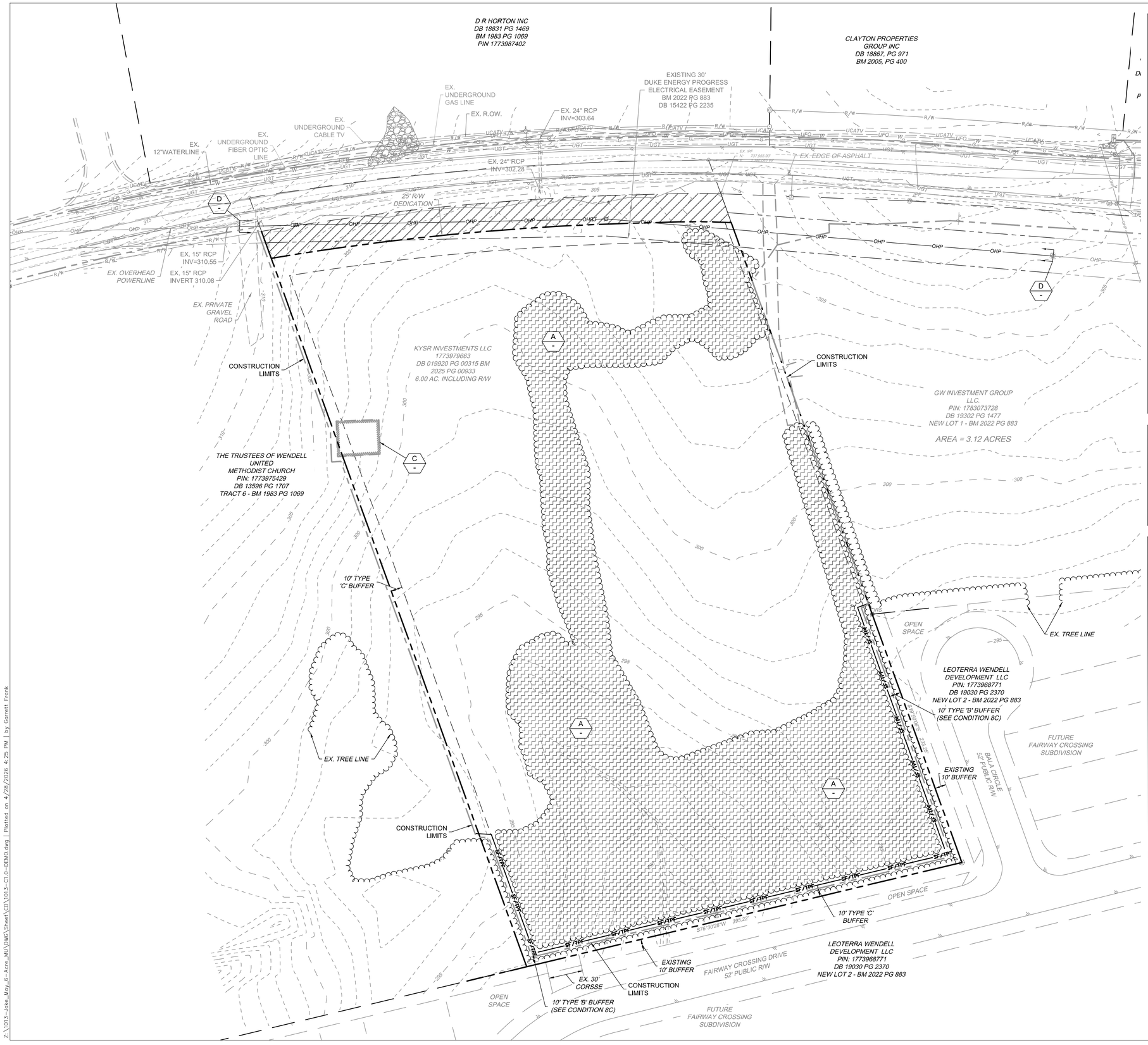

DEMOLITION NOTES

1. ALL UTILITIES OR STRUCTURES NOT INDICATED FOR REMOVAL OR MODIFICATION ARE TO REMAIN AND BE PROTECTED FROM DAMAGE.
2. ALL WASTE MATERIAL GENERATED FROM CLEARING AND DEMOLITION ACTIVITIES SHALL BE DISPOSED OF OFF-SITE IN ACCORDANCE WITH WITH ALL APPLICABLE RULES AND REGULATIONS. CONTRACTOR SHALL SALVAGE ALL SIGNAGE, METERS, ETC. TO OWNER. COORDINATE WITH OWNER PRIOR TO DEMOLITION.
3. CLEAR AND GRUB AS NEEDED WITHIN CONSTRUCTION LIMITS PER SPECIFICATIONS AND DRAWINGS. EXISTING TREES, SHRUBS OR OTHER LANDSCAPE MATERIAL WHICH WILL CONFLICT WITH NEW CONSTRUCTION SHALL BE REMOVED (WHETHER OR NOT SHOWN ON THE DRAWINGS) FOLLOWING APPROVAL OF ENGINEER. BY SUBMITTING A BID, CONTRACTOR ACKNOWLEDGES THAT THE SITE HAS BEEN INVESTIGATED TO DETERMINE TYPE, SIZE AND QUANTITY OF CLEARING REQUIRED FOR CONSTRUCTION.
4. ALL PAVEMENT OR CONCRETE TO BE REMOVED SHALL BE SAW CUT TO PROVIDE A STRAIGHT AND UNIFORM JOINT WITH NEW CONSTRUCTION. ANY EXISTING PAVEMENT, SIDEWALK, CURB & GUTTER, ETC. THAT MUST BE REMOVED TO ALLOW NEW CONSTRUCTION SHALL BE REMOVED AND REPAIRED PER THE SPECIFICATIONS AND DETAILS OR TO MATCH EXISTING CONDITIONS (WHETHER OR NOT SHOWN ON THE DRAWINGS TO BE REMOVED). UTILITY INSTALLATIONS MAY UTILIZE OPEN CUT OF PAVEMENTS UNLESS INDICATED OTHERWISE. TRENCH IN EXISTING ASPHALT SHALL BE PATCHED PER PAVEMENT REPAIR DETAIL.
5. PROTECT ALL ADJACENT PROPERTIES, THE GENERAL PUBLIC AND ALL OF THE OWNER'S FACILITIES. SHOULD DAMAGES OCCUR, NOTIFY ENGINEER IMMEDIATELY.
6. THE CONTRACTOR SHALL EMPLOY A QUALIFIED UTLITIY LOCATOR SERVICE TO LOCATE ALL UNDERGROUND UTILITIES (INCLUDING BUT NOT LIMITED TO ELECTRICAL, TELEPHONE, GAS, CABLE, FIBER OPTIC) WITHIN THE LIMITS OF CONSTRUCTION.
7. VERIFY ALL ILLUSTRATED KNOWN UNDERGROUND ELEMENTS. EXERCISE REASONABLE EFFORTS TO PROTECT ANY UNKNOWN UNDERGROUND ELEMENTS. NOTIFY THE ENGINEER IMMEDIATELY IF UNKNOWN ELEMENTS ARE DISCOVERED THAT WOULD NECESSITATE MODIFICATION TO THE PROPOSED DESIGN.
8. ALL WORK SHALL BE PERFORMED IN ACCORDANCE WITH APPLICABLE LOCAL, STATE AND OSHA REGULATIONS.
9. EXISTING MANHOLES, VALVE BOXES, VAULTS, CLEANOUTS, UTILITY POLES ETC. TO REMAIN WITHIN THE GRADING LIMITS SHALL BE ADJUSTED AS NEEDED TO FUNCTION PROPERTY WITH THE PROPOSED FINISHED GRADES (WETHER OR NOT INDICATED TO BE MODIFIED).
10. ANY AND ALL LANDSCAPING AND EXISTING TREES & SHRUBS TO REMAIN WHICH ARE DAMAGED DURING DEMOLITION OR CONSTRUCTION SHALL BE REPLACED BY THE CONTRACTOR UTILIZING A LICENSED LANDSCAPE CONTRACTOR AT NO ADDITIONAL COST TO THE OWNER.
11. PROTECT EXISTING SITE FURNISHINGS AND PLAYGROUNDS DURING CONSTRUCTION. REPLACE AT NO COST TO THE OWNER IF DAMAGED.
12. A TREE SURVEY PER DURHAM UDO SECTION 8 WAS PERFORMED BY STEVEN BALL, RF AT SOIL & ENVIRONMENTAL CONSULTANTS, PA.
13. ALL TREE PROTECTION FENCING MUST REMAIN IN PLACE THROUGHOUT THE ENTIRE SITE DEVELOPMENT PROCESS UNTIL THE TIME A CERTIFICATE OF OCCUPANCY IS ISSUED

DEMOLITION KEY NOTES

- A — *TREE CLEARING*
- B — *REMOVE GRAVEL PAVEMENT*
- C — *REMOVE EXISTING BARN*
- D — *RELOCATE EXISTING OVERHEAD ELECTRIC*

EXISTING CONDITIONS LEGEND

- EX. CONSTRUCTION LIMITS
- EX. STORM PIPE
- EX. FENCE
- EX. GAS LINE
- EX. POWER LINE
- EX. TELEPHONE LINE
- EX. WATER LINE
- EX. SANITARY SEWER FORCE MAIN
- EX. SANITARY SEWER LINE
- EX. CABLE TV LINE
- EX. FIBER OPTIC LINE
- EX. TREE LINE
- EX. PROPERTY LINE
- LIGHT POLE
- SITE BOLLARD
- UTILITY POLE
- SANITARY SEWER MANHOLE
- STORM SEWER MANHOLE
- CLEANOUT (SANITARY OR STORM)
- DROP INLET
- FIRE HYDRANT
- WATER VALVE
- TELECOM BOX
- GROUND MOUNTED SIGN

NAD 83

SCALE 1"=40'

0 40' 80'

FRANK LAND DESIGN, PC
UNIQUE SOLUTIONS: YOUR VISION, OUR EXPERTISE
120 MOSAIC BLVD; SUITE 200-47, PITTSBORO, NC 27312 | LICENSE #C-5114 | WWW.FRANKLANDDESIGN.COM

PRELIMINARY

NORTH CAROLINA PROFESSIONAL SEAL 055780 ENGINEER GARRETT W. FRANK

NOT FOR CONSTRUCTION

LANDSCAPE ARCHITECTURE | CIVIL ENGINEERING

REVISIONS:
- 11.13.25 1ST ROUND MP COMMENT REVISIONS
- 01.28.26 2ND ROUND MP COMMENT REVISIONS
- 03.06.26 3RD ROUND MP COMMENT REVISIONS
- 03.27.26 4TH ROUND MP COMMENT REVISIONS

CHECKED BY:	DATE:
G.FRANK	04.30.2025
DESIGN / DRAWN BY:	SCALE:
JLA	SEE PLANS

JAKE MAY MIXED-USE PHASE #2

WAKE COUNTY, NC

0 WENDELL FALLS PARKWAY, WENDELL, NC 27591

EX. CONDITIONS AND DEMOLITION PLAN

ISSUED FOR:	MASTER PLAN
JOB NO.	1013
SHEET NO.	C1.0

These plans and associated documents are the exclusive property of FRANK LAND DESIGN, PC. and may not be reproduced in whole or in part and shall not be used for any purpose whatsoever, inclusive, but not limited to construction, bidding, and/or construction staking without the express written consent of FRANK LAND DESIGN, PC.

Z:\1013-Jake_May_6-Acre_MU\DWG\Sheet\CD\1013-C1.0-DEMO.dwg | Plotted on 4/28/2026 4:25 PM | by Garrett Frank

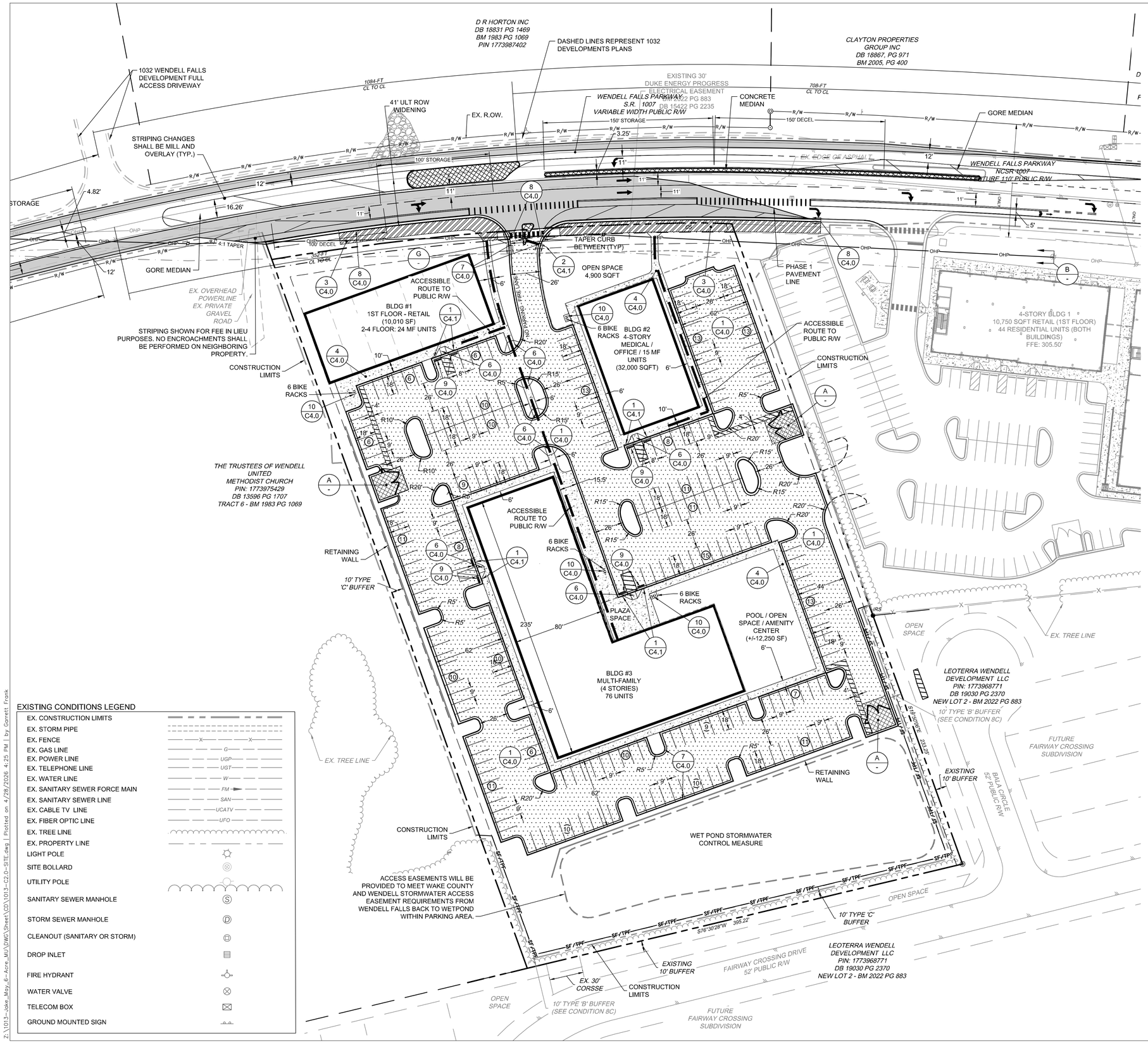

SITE LAYOUT NOTES

1. ALL CONSTRUCTION SHALL COMPLY WITH ALL APPLICABLE TOWN OF WENDELL, NCDOT AND OSHA STANDARDS AND SPECIFICATIONS.
2. ALL DIMENSIONS ARE TO FACE OF CURB, EDGE OF PAVEMENT, BUILDING WALL FACE OR PROPERTY LINE, UNLESS OTHERWISE NOTED.
3. ALL RADII ARE DIMENSIONED FROM BACK OF CURB. IF NOT STATED, RADII DIMENSION IS 5'.
4. CONTRACTOR SHALL FIELD VERIFY ALL DIMENSIONS, UTILITIES AND GRADES PRIOR TO CONSTRUCTION. NOTIFY ENGINEER OF ANY DISCREPANCIES PRIOR TO COMMENCING ANY RELATED CONSTRUCTION.
5. THE CONTRACTOR SHALL BE RESPONSIBLE FOR OFF-SITE DISPOSAL OF ALL WASTE MATERIALS GENERATED DURING CONSTRUCTION AND FOR OBTAINING ALL APPLICABLE PERMITS FOR OFF-SITE STOCKPILES AND/OR WASTE AREAS.
6. CONTRACTOR IS RESPONSIBLE FOR ANY DAMAGES DURING CONSTRUCTION AND SHALL MAKE REPAIRS AT NO EXPENSE TO THE OWNER.
7. AT LEAST 72 HOURS PRIOR TO CONSTRUCTION OR EXCAVATION THE CONTRACTOR SHALL NOTIFY "NORTH CAROLINA ONE CALL" (811) OR (1-800-632-4949) TO HAVE EXISTING UTILITIES LOCATED. ALL PRIVATE UTILITIES SHALL BE LOCATED AS NEEDED BY A PRIVATE UTILITY LOCATE COMPANY EMPLOYED BY THE CONTRACTOR.
8. ALL CURB AND GUTTER OFFSITE SHALL BE 30" WIDE UNLESS NOTED OTHERWISE.
9. ALL DISTURBED CURB & GUTTER AND ASPHALT SHALL BE REPLACED PER PROJECT DETAILS AND NCDOT STANDARDS AND SPECIFICATIONS.
10. RAISE ALL STRUCTURES AT NO ADDITIONAL COST TO THE OWNER SO THAT THE TOP OF THE STRUCTURE EQUALS THE FINISH GRADE OF THE NEW ASPHALT.
11. COORDINATE THE PROJECT SCHEDULE WITH THE CIVIL ENGINEER AND OWNER. ANY UTILITY INTERRUPTIONS SHALL BE COORDINATED WITH THE OWNER AT LEAST 72 HOURS PRIOR TO THE INTERRUPTION.
12. PROVIDE A SMOOTH TRANSITION BETWEEN NEW ASPHALT AND EXISTING ASPHALT SURFACES.
13. ALL SIDEWALKS ARE TO HAVE NO MORE THAN A 1:20 (5.0%) SLOPE FOR THE LENGTH OF THE SIDEWALK AND NO MORE THAN A 1:50 (2.0%) SLOPE FOR THE WIDTH OF THE SIDEWALK. NOTIFY ENGINEER IF THIS CANNOT BE ACHIEVED.

KEY NOTES

1 C4.0	STANDARD DUTY ASPHALT PAVEMENT
2 C4.0	NCDOT ASPHALT PAVEMENT WIDENING
3 C4.0	MULTI-USE TRAIL ASPHALT PAVEMENT
4 C4.0	STANDARD DUTY CONCRETE
5 C4.0	REINFORCED CONCRETE PAVEMENT
6 C4.0	ACCESSIBLE CURB RAMP
7 C4.0	24" CONCRETE CURB & GUTTER
8 C4.0	30" NCDOT CONCRETE CURB & GUTTER
9 C4.0	PRECAST CONCRETE WHEELSTOP
10 C4.0	BICYCLE RACK
A -	DUMPSTER ENCLOSURE (TO MATCH BUILDINGS)
B -	RELOCATE OVERHEAD ELECTRIC
	ACCESSIBLE ROUTE TO PUBLIC R/W

TRAFFIC CONTROL NOTES

1. ALL SITE SIGNAGE SHALL BE IN ACCORDANCE WITH THE MANUAL ON UNIFORM TRAFFIC CONTROL DEVICES (MUTCD) AND NCDOT STANDARDS.
2. PAVEMENT MARKINGS WITHIN RIGHT-OF-WAY SHALL BE THERMOPLASTIC. PAVEMENT MARKINGS ON SITE SHALL BE 2-COATS ALKYD RESIN PAINT.
3. ALL PAVEMENT MARKINGS SHALL BE IN ACCORDANCE WITH NCDOT STANDARDS AND THE PROJECT SPECIFICATIONS, WHICHEVER IS MORE STRINGENT.
4. ALL SIGNAGE SHALL HAVE HIGH INTENSITY PRISMATIC SHEETING.
5. SIGNS SHALL BE FABRICATED FROM ALUMINUM ALLOY SHEETS.
6. ALL MOUNTING HARDWARE SHALL BE GALVANIZED.
7. "VAPS" ON PLANS DENOTES VAN ACCESSIBLE PARKING SIGN. INSTALL R7-8A, R7-8D, & R7-8P.
8. "APS" ON PLANS DENOTES ACCESSIBLE PARKING SIGN. INSTALL R7-8A & R7-8D ONLY.

SIGNAGE KEY NOTES

		MUTCD
1 C4.1	VAN ACCESSIBLE PARKING SIGN	R7-8P, R7-8A, R7-8D (PER PLAN & DETAIL)
2 C4.1	STOP SIGN	R7-8P, R7-8A, R7-8D (PER PLAN & DETAIL)
G -	STOP BAR	R1-1 (PER PLAN & DETAIL)

EXISTING CONDITIONS LEGEND

- EX. CONSTRUCTION LIMITS
- EX. STORM PIPE
- EX. FENCE
- EX. GAS LINE
- EX. POWER LINE
- EX. TELEPHONE LINE
- EX. WATER LINE
- EX. SANITARY SEWER FORCE MAIN
- EX. SANITARY SEWER LINE
- EX. CABLE TV LINE
- EX. FIBER OPTIC LINE
- EX. TREE LINE
- EX. PROPERTY LINE
- LIGHT POLE
- SITE BOLLARD
- UTILITY POLE
- SANITARY SEWER MANHOLE
- STORM SEWER MANHOLE
- CLEANOUT (SANITARY OR STORM)
- DROP INLET
- FIRE HYDRANT
- WATER VALVE
- TELECOM BOX
- GROUND MOUNTED SIGN

FRANK LAND DESIGN, PC
UNIQUE SOLUTIONS: YOUR VISION, OUR EXPERTISE
120 MOSAIC BLVD; SUITE 200-47, PITTSBORO, NC 27312 | LICENSE #C-5114 | WWW.FRANKLANDDESIGN.COM

PRELIMINARY

NORTH CAROLINA PROFESSIONAL SEAL 055780 ENGINEER GARRETT W. FRANK

NOT FOR CONSTRUCTION

LANDSCAPE ARCHITECTURE | CIVIL ENGINEERING

REVISIONS:	
11.13.25	1ST ROUND MP COMMENT REVISIONS
01.28.26	2ND ROUND MP COMMENT REVISIONS
03.06.26	3RD ROUND MP COMMENT REVISIONS
03.27.26	4TH ROUND MP COMMENT REVISIONS

CHECKED BY: G.FRANK	DATE: 04.30.2025
DESIGN / DRAWN BY: JLA	SCALE: SEE PLANS

JAKE MAY MIXED-USE PHASE #2

WAKE COUNTY, NC

0 WENDELL FALLS PARKWAY, WENDELL, NC 27591

SITE PLAN

ISSUED FOR:	MASTER PLAN
JOB NO.	1013
SHEET NO.	C2.0

These plans and associated documents are the exclusive property of FRANK LAND DESIGN, PC, and may not be reproduced in whole or in part and shall not be used for any purpose whatsoever, inclusive, but not limited to construction, bidding, and/or construction staking without the express written consent of FRANK LAND DESIGN, PC.

Z:\1013-Jake_May_6-Acre_MU\DWG\Sheet\C2\1013-C2.0-SITE.dwg | Plotted on 4/28/2026 4:25 PM | by Garrett Frank

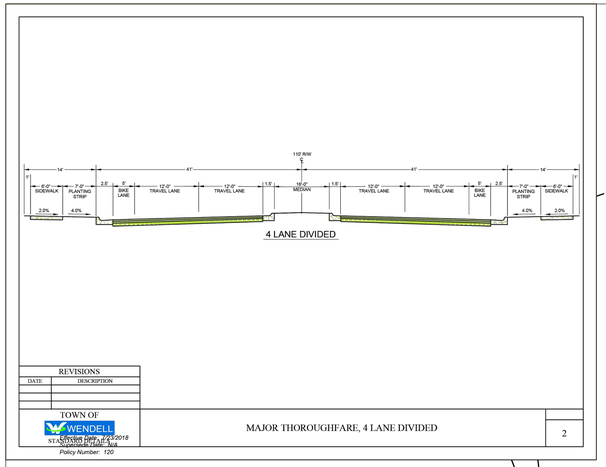

4 LANE DIVIDED

REVISIONS	
DATE	DESCRIPTION

TOWN OF WENDELL
STANDARD DWG. No. 4.02.2018
Construction Plans - N/A
Policy Number: 120

MAJOR THOROUGHFARE, 4 LANE DIVIDED

2

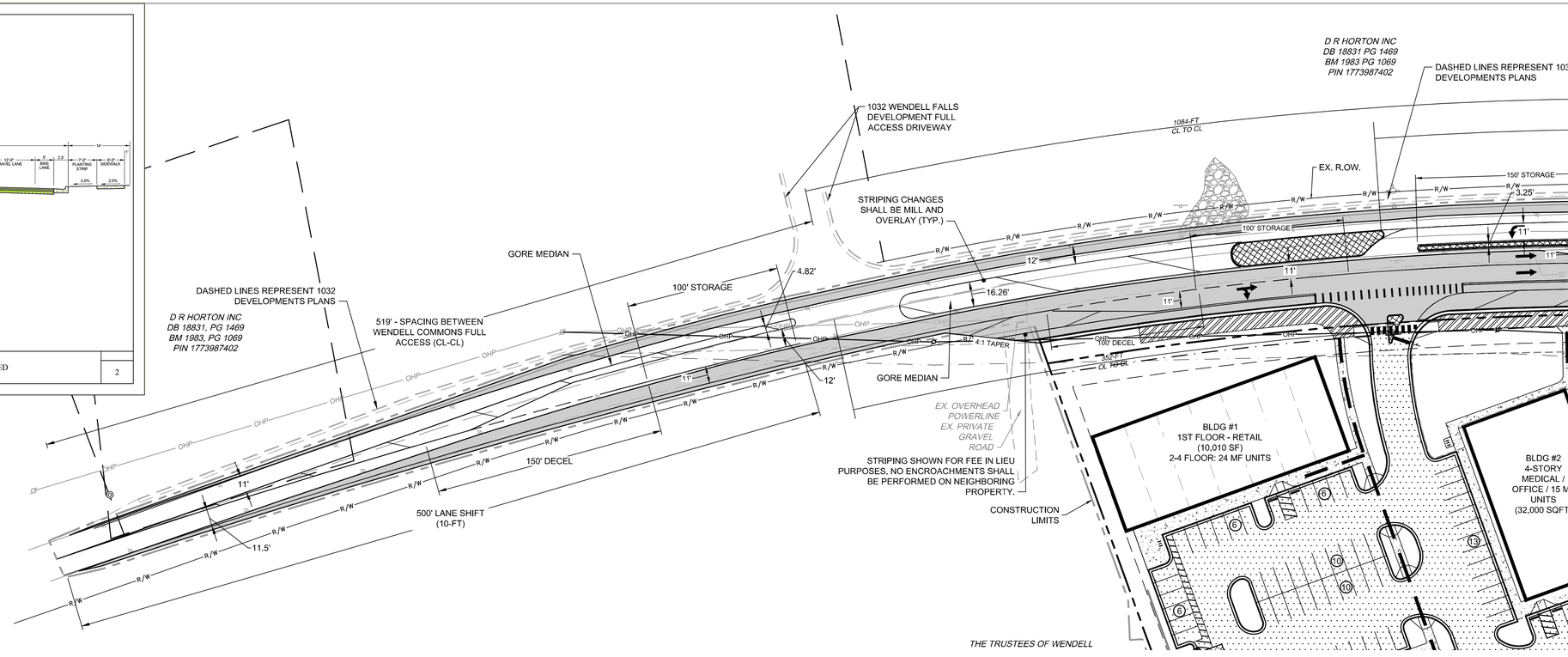

WENDELL FALLS - ROAD IMPROVEMENTS WEST

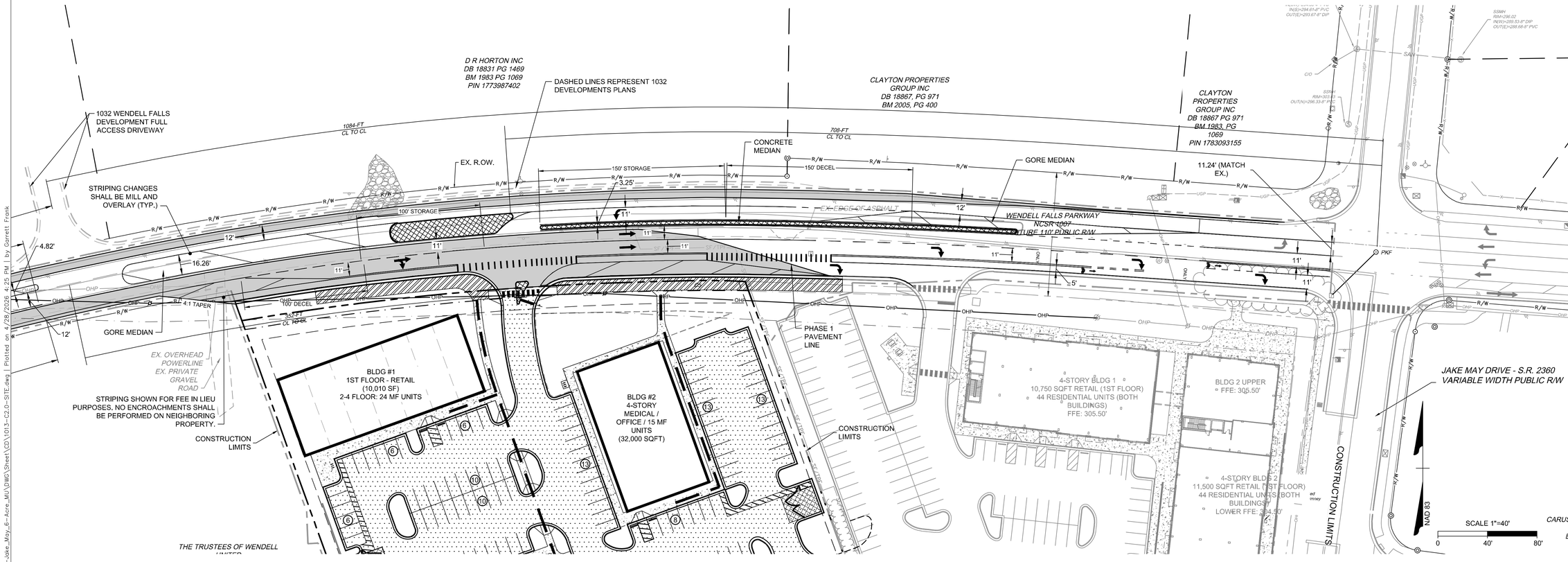

WENDELL FALLS - ROAD IMPROVEMENTS EAST

FRANK LAND DESIGN, PC
UNIQUE SOLUTIONS: YOUR VISION, OUR EXPERTISE
LANDSCAPE ARCHITECTURE | CIVIL ENGINEERING
120 MOSAIC BLVD; SUITE 200-47, PITTSBORO, NC 27312 | LICENSE #C-5114 | WWW.FRANKLANDDESIGN.COM

PRELIMINARY

NORTH CAROLINA PROFESSIONAL ENGINEER SEAL 055780 GARRETT W. FRANK

NOT FOR CONSTRUCTION

REVISIONS:	
11.13.25	1ST ROUND MF COMMENT REVISIONS
01.28.26	2ND ROUND MF COMMENT REVISIONS
03.06.26	3RD ROUND MF COMMENT REVISIONS
03.27.26	4TH ROUND MF COMMENT REVISIONS

CHECKED BY:	DATE:
G.FRANK	04.30.2025
DESIGN / DRAWN BY:	SCALE:
JLA	SEE PLANS

JAKE MAY MIXED-USE PHASE #2

WAKE COUNTY, NC

0 WENDELL FALLS PARKWAY, WENDELL, NC 27591

CONCEPTUAL ROAD IMPROVEMENTS

ISSUED FOR:	MASTER PLAN
JOB NO.	1013
SHEET NO.	C2.1

These plans and associated documents are the exclusive property of FRANK LAND DESIGN, PC, and may not be reproduced in whole or in part and shall not be used for any purpose whatsoever, inclusive, but not limited to construction, bidding, and/or construction staking without the express written consent of FRANK LAND DESIGN, PC.

Z:\1013-Jake_May_6-Acre_MU\DWG\Sheet\C01\1013-C2.0-SITE.dwg | Plotted on 4/28/2026 4:45 PM | by Garrett Frank

D R HORTON INC
DB 18831 PG 1469
BM 1983 PG 1069
PIN 1773987402

CLAYTON PROPERTIES GROUP INC
DB 18867, PG 971
BM 2005, PG 400

THE TRUSTEES OF WENDELL UNITED METHODIST CHURCH
PIN: 1773975429
DB 13596 PG 1707
TRACT 6 - BM 1983 PG 1069

LEOTERRA WENDELL DEVELOPMENT LLC
PIN: 1773968771
DB 19030 PG 2370
NEW LOT 2 - BM 2022 PG 883

WENDELL FALLS PARKWAY
NCSR 1007
FUTURE 110' PUBLIC R/W

FAIRWAY CROSSING DRIVE
52' PUBLIC R/W

BALA CIRCLE
52' PUBLIC R/W

EXISTING CONDITIONS LEGEND

- EX. CONSTRUCTION LIMITS
- EX. STORM PIPE
- EX. FENCE
- EX. GAS LINE
- EX. POWER LINE
- EX. TELEPHONE LINE
- EX. WATER LINE
- EX. SANITARY SEWER FORCE MAIN
- EX. SANITARY SEWER LINE
- EX. CABLE TV LINE
- EX. FIBER OPTIC LINE
- EX. TREE LINE
- EX. PROPERTY LINE
- LIGHT POLE
- SITE BOLLARD
- UTILITY POLE
- SANITARY SEWER MANHOLE
- STORM SEWER MANHOLE
- CLEANOUT (SANITARY OR STORM)
- DROP INLET
- FIRE HYDRANT
- WATER VALVE
- TELECOM BOX
- GROUND MOUNTED SIGN

STANDARD UTILITY NOTES

1. ALL MATERIALS & CONSTRUCTION METHODS SHALL BE IN ACCORDANCE WITH CITY OF RALEIGH DESIGN STANDARDS, DETAILS & SPECIFICATIONS (REFERENCE: CORPUD HANDBOOK, CURRENT EDITION)
2. UTILITY SEPARATION REQUIREMENTS:
   a) A DISTANCE OF 100' SHALL BE MAINTAINED BETWEEN SANITARY SEWER & ANY PRIVATE OR PUBLIC WATER SUPPLY SOURCE SUCH AS AN IMPOUNDED RESERVOIR USED AS A SOURCE OF DRINKING WATER. IF ADEQUATE LATERAL SEPARATION CANNOT BE ACHIEVED, FERROUS SANITARY SEWER PIPE SHALL BE SPECIFIED & INSTALLED TO WATERLINE SPECIFICATIONS. HOWEVER, THE MINIMUM SEPARATION SHALL NOT BE LESS THAN 25' FROM A PRIVATE WELL OR 50' FROM A PUBLIC WELL.
   b) WHEN INSTALLING WATER &/OR SEWER MAINS, THE HORIZONTAL SEPARATION BETWEEN UTILITIES SHALL BE 10'. IF THIS SEPARATION CANNOT BE MAINTAINED DUE TO EXISTING CONDITIONS, THE VARIATION ALLOWED IS THE WATER MAIN IN A SEPARATE TRENCH WITH THE ELEVATION OF THE WATER MAIN AT LEAST 18" ABOVE THE TOP OF THE SEWER & MUST BE APPROVED BY THE PUBLIC UTILITIES DIRECTOR. ALL DISTANCES ARE MEASURED FROM OUTSIDE DIAMETER TO OUTSIDE DIAMETER.
   c) WHERE IT IS IMPOSSIBLE TO OBTAIN PROPER SEPARATION, OR ANYTIME A SANITARY SEWER PASSES OVER A WATERMAIN, DIP MATERIALS OR STEEL ENCASEMENT EXTENDED 10' ON EACH SIDE OF CROSSING MUST BE SPECIFIED & INSTALLED TO WATERLINE SPECIFICATIONS.
   d) 5.0' MINIMUM HORIZONTAL SEPARATION IS REQUIRED BETWEEN ALL SANITARY SEWER & STORM SEWER FACILITIES, UNLESS DIP MATERIAL IS SPECIFIED FOR SANITARY SEWER
   e) MAINTAIN 18" MIN. VERTICAL SEPARATION AT ALL WATERMAIN & RCP STORM DRAIN CROSSINGS; MAINTAIN 18" MIN. VERTICAL SEPARATION AT ALL SANITARY SEWER & RCP STORMDRAIN CROSSINGS. WHERE ADEQUATE SEPARATIONS CANNOT BE ACHIEVED, SPECIFY DIP MATERIALS & A CONCRETE CRADLE HAVING 6" MIN. CLEARANCE (PER CORPUD DETAILS W- 41 & S-49).
   f) ALL OTHER UNDERGROUND UTILITIES SHALL CROSS WATER & SEWER FACILITIES WITH 18" MIN. VERTICAL SEPARATION REQUIRED.
3. ANY NECESSARY FIELD REVISIONS ARE SUBJECT TO REVIEW & APPROVAL OF AN AMENDED PLAN &/OR PROFILE BY THE CITY OF RALEIGH PUBLIC UTILITIES DEPARTMENT PRIOR TO CONSTRUCTION.
4. DEVELOPER SHALL PROVIDE 30 DAYS ADVANCE WRITTEN NOTICE TO OWNER FOR ANY WORK REQUIRED WITHIN AN EXISTING CITY OF RALEIGH UTILITY EASEMENT TRAVERSING PRIVATE PROPERTY.
5. CONTRACTOR SHALL MAINTAIN CONTINUOUS WATER & SEWER SERVICE TO EXISTING RESIDENCES & BUSINESSES THROUGHOUT CONSTRUCTION OF PROJECT. ANY NECESSARY SERVICE INTERRUPTIONS SHALL BE PRECEDED BY A 24-HOUR ADVANCE NOTICE TO THE CITY OF RALEIGH PUBLIC UTILITIES DEPARTMENT.
6. SEWER BYPASS PUMPING – A BYPASS PLAN SEALED BY AN NC PROFESSIONAL ENGINEER SHALL BE PROVIDED TO RALEIGH WATER PRIOR TO PUMPING OPERATIONS FOR APPROVAL. THE OPERATIONS AND EQUIPMENT SHALL COMPLY WITH THE PUBLIC UTILITIES HANDBOOK.
7. 3.0' MINIMUM COVER IS REQUIRED ON ALL WATER MAINS & SEWER FORCE MAINS. 4.0' MINIMUM COVER IS REQUIRED ON ALL REUSE MAINS.
8. IT IS THE DEVELOPER'S RESPONSIBILITY TO ABANDON OR REMOVE EXISTING WATER & SEWER SERVICES NOT BEING USED INREDEVELOPMENT OF A SITE UNLESS OTHERWISE DIRECTED BY THE CITY OF RALEIGH PUBLIC UTILITIES DEPARTMENT. THIS INCLUDES ABANDONING TAP AT MAIN & REMOVAL OF SERVICE FROM ROW OR EASEMENT PER CORPUD HANDBOOK PROCEDURE.
9. INSTALL WATER SERVICES WITH METERS LOCATED AT ROW OR WITHIN A 2'X2' WATERLINE EASEMENT IMMEDIATELY ADJACENT.NOTE: IT IS THE APPLICANT'S RESPONSIBILITY TO PROPERLY SIZE THE WATER SERVICE FOR EACH CONNECTION TO PROVIDE ADEQUATE FLOW & PRESSURE.
10. INSPECTIONS OF 4" AND LARGER WATER MAINS OF THE PRIVATE DISTRIBUTION SYSTEM WILL BE INSPECTED AS PART OF THE INFRASTRUCTURE PERMIT.
11. PRIVATE SEWER MAINS AS PART OF A COLLECTION SYSTEM ARE PERMITTED AND INSPECTED UNDER THE PRIVATE INFRASTRUCTURE PERMIT FOR SEWER.
12. ANY WATER OR SEWER SERVICES ON PRIVATE PROPERTY THAT WILL BE INSTALLED UNDER CONSTRUCTION DRAWINGS MAY REQUIRE A PLUMBING UTILITY PERMIT IN THE CITY OF RALEIGH. CONSULT WITH THE ENGINEERING INSPECTION COORDINATOR DURING THE PRE-CONSTRUCTION MEETING ON THE NECESSARY PERMITS.
13. INSTALL SEWER SERVICES WITH CLEANOUTS LOCATED AT ROW OR EASEMENT LINE & SPACED PER THE CURRENT NC PLUMBING CODE.
14. PRESSURE REDUCING VALVES ARE REQUIRED ON ALL WATER SERVICES EXCEEDING 80 PSI; BACKWATER VALVES ARE REQUIRED ON ALL SANITARY SEWER SERVICES HAVING BUILDING DRAINS LOWER THAN 1.0' ABOVE THE NEXT UPSTREAM MANHOLE.
15. ALL ENVIRONMENTAL PERMITS APPLICABLE TO THE PROJECT MUST BE OBTAINED FROM NCDWQ, USACE &/OR FEMA FOR ANY RIPARIAN BUFFER, WETLAND &/OR FLOODPLAIN IMPACTS (RESPECTIVELY) PRIOR TO CONSTRUCTION.
16. NCDOT / RAILROAD ENCROACHMENT AGREEMENTS ARE REQUIRED FOR ANY UTILITY WORK (INCLUDING MAIN EXTENSIONS & SERVICE TAPS) WITHIN STATE OR RAILROAD ROW PRIOR TO CONSTRUCTION.
17. GREASE INTERCEPTOR / OIL WATER SEPARATOR SIZING CALCULATIONS & INSTALLATION SPECIFICATIONS SHALL BE APPROVED BYTHE R/W FOG PROGRAM COORDINATOR PRIOR TO ISSUANCE OF A UC AND/OR BUILDING PERMIT. CONTACT (919) 996-4516 OR FOG@RALEIGHNC.GOV FOR MORE INFORMATION.
18. CROSS-CONNECTION CONTROL PROTECTION DEVICES ARE REQUIRED BASED ON THE DEGREE OF HEALTH HAZARD INVOLVED AS
LISTED IN APPENDIX B OF THE RULES GOVERNING PUBLIC WATER SYSTEMS IN NORTH CAROLINA.
19. THE DEVICES SHALL MEET THE AMERICAN SOCIETY OF SANITARY ENGINEERING (ASSE) STANDARDS AND BE ON THE UNIVERSITY OF SOUTHERN CALIFORNIA APPROVAL LIST.
20. THE DEVICE AND INSTALLATION SHALL MEET THE GUIDELINES OF APPENDIX A – GUIDELINES AND REQUIREMENTS FOR THE CROSS CONNECTION PROGRAM IN RALEIGH'S SERVICE AREA.
21. THE DEVICES SHALL BE INSTALLED AND TESTED (BOTH, INITIAL AND PERIODIC TESTING THEREAFTER) IN ACCORDANCE WITH THE MANUFACTURER'S RECOMMENDATIONS OR THE LOCAL CROSS CONNECTION CONTROL PROGRAM, WHICHEVER IS MORE STRINGENT. CONTACT CROSS.CONNECTION@RALEIGHNC.GOV FOR MORE INFORMATION.
22. NOTICE FOR PROJECTS THAT INVOLVE AN OVERSIZED MAIN OR URBAN MAIN REPLACEMENT. ANY CITY REIMBURSEMENT GREATER THAN $250,000.00 MUST UNDERGO THE PUBLIC BIDDING PROCESS.
23. PRIVATE SUB-METERING - NO RESALE OF WATER SHALL OCCUR WITHOUT APPROVAL OF THE NORTH CAROLINA UTILITY COMMISSION. SUB-METERING SHALL BE IN ACCORDANCE WITH SECTION 1400 OF THE "SAFE DRINKING WATER ACT".

KEY NOTES

- 2 / C4.2 STANDARD CLEANOUT
- 3 / C4.2 SEWER LINE TRENCH BOTTOM & BACKFILLING REQUIREMENTS
- 4 / C4.2 SANITARY SEWER MANHOLE
- 5 / C4.2 SANITARY SEWER INSIDE DROP CONNECTION
- 6 / C4.2 UTILITY CRADLE
- 1 / C4.3 GREASE TRAP
- 2 / C4.3 WATERLINE TRENCH BOTTOM & BACKFILLING REQUIREMENTS
- 3 / C4.3 TAPPING SLEEVE, VALVE, AND THRUST BLOCKING
- 4 / C4.3 GATE VALVE & RISER
- 5 / C4.3 THRUST BLOCKING
- 6 / C4.3 4" WATER METER & VAULT
- 1 / C4.4 2" WATER METER & VAULT
- 2 / C4.4 DOMESTIC RPZ BACKFLOW PREVENTER (SEE PLANS FOR SIZE)
- 3 / C4.4 WATER MAIN TAPPING SCHEMATIC
- 4 / C4.4 FIRE SERVICE BACKFLOW PREVENTER (10" RPDA)
- 5 / C4.4 WALL MOUNTED FDC
- 6 / C4.4 STANDARD RESTRAINED-JOINT FIRE HYDRANT
- 7 / C4.4 POST INDICATOR VALVE
- A / - STAINLESS STEEL FULL CIRCUMFERENCE SADDLE w/ CORPORATION STOP

MANHOLE SHALL NOT BE IN CURB LINE. ROTATION OF OFFSET CONE AND RE-ALINGMENT OF STEPS WILL BE REQUIRED TO ENSURE MANHOLE IS NOT WITHIN CURB LINE

INSET 'A' | SCALE = 1" = 40'

SCALE 1"=40'
0 40' 80'
NAD 83

FRANK LAND DESIGN, PC
UNIQUE SOLUTIONS: YOUR VISION, OUR EXPERTISE
120 MOSAIC BLVD; SUITE 200-47, PITTSBORO, NC 27312 | LICENSE #C-51141 | WWW.FRANKLANDDESIGN.COM

PRELIMINARY

NORTH CAROLINA PROFESSIONAL ENGINEER SEAL 055780 GARRETT W. FRANK

NOT FOR CONSTRUCTION

LANDSCAPE ARCHITECTURE | CIVIL ENGINEERING

REVISIONS:	
11.13.25	1ST ROUND MP COMMENT REVISIONS
01.28.26	2ND ROUND MP COMMENT REVISIONS
03.06.26	3RD ROUND MP COMMENT REVISIONS
03.27.26	4TH ROUND MP COMMENT REVISIONS

CHECKED BY:	DATE:
G.FRANK	04.30.2025
DESIGN / DRAWN BY:	SCALE:
JLA	SEE PLANS

JAKE MAY MIXED-USE PHASE #2

WAKE COUNTY, NC

0 WENDELL FALLS PARKWAY, WENDELL, NC 27591

UTILITY PLAN

ISSUED FOR:	MASTER PLAN
JOB NO.	1013
SHEET NO.	C3.0

These plans and associated documents are the exclusive property of FRANK LAND DESIGN, PC. and may not be reproduced in whole or in part and shall not be used for any purpose whatsoever, inclusive, but not limited to construction, bidding, and/or construction staking without the express written consent of FRANK LAND DESIGN, PC.

Z:\1013-Jake_May_6-Acre_MU\DWG\Sheet\CD\1013-C3.0-UTIL.dwg | Plotted on 4/28/2026 4:25 PM | by Garrett Frank

D R HORTON INC
DB 18831 PG 1469
BM 1983 PG 1069
PIN 1773987402

CLAYTON PROPERTIES GROUP INC
DB 18867, PG 971
BM 2005, PG 400

EX. R.O.W.

EX. EDGE OF ASPHALT

WENDELL FALLS PARKWAY
NCSR 1007
FUTURE 110' PUBLIC R/W

EX. OVERHEAD POWERLINE

EX. PRIVATE GRAVEL ROAD

THE TRUSTEES OF WENDELL UNITED METHODIST CHURCH
PIN: 1773975429
DB 13596 PG 1707
TRACT 6 - BM 1983 PG 1069

BLDG #1
1ST FLOOR - RETAIL
(10,010 SF)
2-4 FLOOR: 24 MF UNITS

BLDG #2
4-STORY
MEDICAL /
OFFICE / 15 MF
UNITS
(32,000 SQFT)

BLDG #3
MULTI-FAMILY
(4 STORIES)
76 UNITS

272 LF HYDRANT HOSELAY (SPRINKLER BUILDING)
192' TRUCK HOSELAY
289 LF HYDRANT HOSELAY (SPRINKLER BUILDING)
200' TRUCK HOSELAY
188' TRUCK HOSELAY
171 LF HYDRANT HOSELAY (SPRINKLER BUILDING)
85' TRUCK HOSELAY
158 LF HYDRANT HOSELAY (SPRINKLER BUILDING)
142 LF HYDRANT HOSELAY (SPRINKLER BUILDING)
189' TRUCK HOSELAY
403 LF HYDRANT HOSELAY (SPRINKLER BUILDING)
200' TRUCK HOSELAY
100' TRUCK HOSELAY
200' TRUCK HOSELAY
491 LF HYDRANT HOSELAY (SPRINKLER BUILDING)
200' TRUCK HOSELAY

CONSTRUCTION LIMITS

10' TYPE 'C' BUFFER

EX. TREE LINE

WET POND STORMWATER CONTROL MEASURE

OPEN SPACE

FUTURE FAIRWAY CROSSING SUBDIVISION

LEOTERRA WENDELL DEVELOPMENT LLC
PIN: 1773968771
DB 19030 PG 2370
NEW LOT 2 - BM 2022 PG 883

10' TYPE 'B' BUFFER (SEE CONDITION 8C)

EXISTING 10' BUFFER

BALA CIRCLE
52' PUBLIC R/W

FAIRWAY CROSSING DRIVE
52' PUBLIC R/W

EX. 30' CORSSE

MATCH LINE (SEE INSET A')

SAN 8" PVC

4-STORY BLDG 1
10,750 SQFT RETAIL (1ST FLOOR)
44 RESIDENTIAL UNITS (BOTH BUILDINGS)
FFE: 345.67

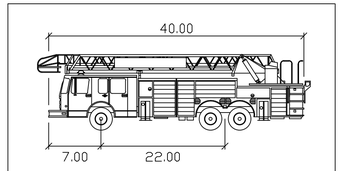

Aerial Fire Truck

	feet
Width	: 8.50
Track	: 8.50
Lock to Lock Time	: 6.0
Steering Angle	: 33.3

AERIAL FIRE TRUCK PROFILE
NTS

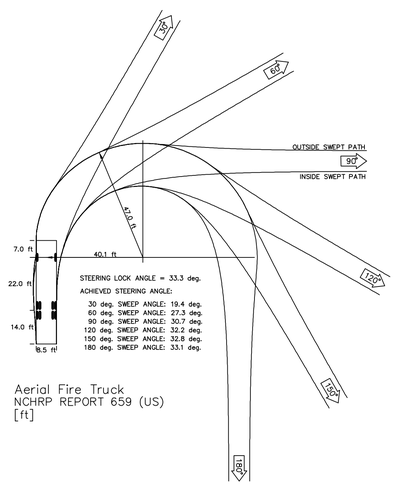

Aerial Fire Truck
NCHRP REPORT 659 (US)
[ft]

AERIAL FIRE TRUCK TURN TEMPLATE
NTS

SCALE 1"=40'
0 40' 80'
NAD 83

HOSE LAY LEGEND

FH FH FH FIRE HYDRANT HOSE LAY
FH FH FH FIRE TRAVEL HOSE LAY

FRANK LAND DESIGN, PC
UNIQUE SOLUTIONS: YOUR VISION, OUR EXPERTISE
120 MOSAIC BLVD; SUITE 200-47, PITTSBORO, NC 27312 | LICENSE #C-5114 | WWW.FRANKLANDDESIGN.COM

PRELIMINARY

NORTH CAROLINA PROFESSIONAL SEAL 055780 ENGINEER GARRETT W. FRANK

NOT FOR CONSTRUCTION

LANDSCAPE ARCHITECTURE | CIVIL ENGINEERING

REVISIONS:
11.13.25 1ST ROUND MP COMMENT REVISIONS
01.28.26 2ND ROUND MP COMMENT REVISIONS
03.06.26 3RD ROUND MP COMMENT REVISIONS
03.27.26 4TH ROUND MP COMMENT REVISIONS

CHECKED BY:	DATE:
G.FRANK	04.30.2025
DESIGN / DRAWN BY:	SCALE:
JLA	SEE PLANS

JAKE MAY MIXED-USE PHASE #2

WAKE COUNTY, NC

0 WENDELL FALLS PARKWAY, WENDELL, NC 27591

FIRE HOSELAY PLAN

ISSUED FOR:	MASTER PLAN
JOB NO.	1013
SHEET NO.	C3.1

These plans and associated documents are the exclusive property of FRANK LAND DESIGN, PC and may not be reproduced in whole or in part and shall not be used for any purpose whatsoever, inclusive, but not limited to construction, bidding, and/or construction staking without the express written consent of FRANK LAND DESIGN, PC.

Z:\1013-Jake_May_6-Acre_MU\DWG\Sheet\CD\1013-C3.0-UTIL.dwg | Plotted on 4/28/2026 4:25 PM | by Garrett Frank

COMPACTION NOTES:

SUBGRADE AND ABC STONE
1. COMPACT TO MAXIMUM DRY DENSITY PER ASTM D698 STANDARD PROCTOR AND WITHIN 2% MAXIMUM MOISTURE CONTENT.
2. COMPACT SUBGRADE SOIL TO 95%
3. COMPACT ABC STONE TO 100%.
4. REFER TO NCDOT SPECIFICATIONS FOR ADDITIONAL INFORMATION.

ASPHALT
1. COMPACT ASPHALT TO 92% MAXIMUM SPECIFIC GRAVITY.
2. REFER TO NCDOT SPECIFICATIONS FOR ADDITIONAL INFORMATION.

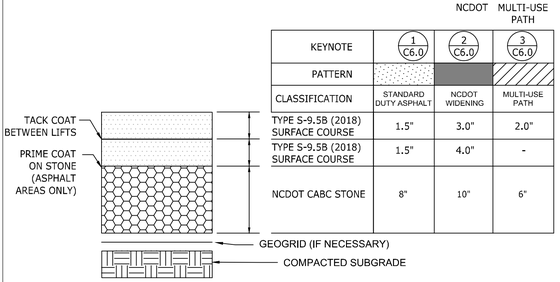

KEYNOTE	1 C6.0	2 C6.0	3 C6.0
PATTERN			
CLASSIFICATION	STANDARD DUTY ASPHALT	NCDOT WIDENING	MULTI-USE PATH
TYPE S-9.5B (2018) SURFACE COURSE	1.5"	3.0"	2.0"
TYPE S-9.5B (2018) SURFACE COURSE	1.5"	4.0"	-
NCDOT CABC STONE	8"	10"	6"

NOTES:
1. THE CONTRACTOR MAY CHOOSE TO INSTALL INTERMEDIATE COURSES OF PAVEMENT TO STABILIZE THE SITE DURING CONSTRUCTION AT NO ADDITIONAL COST. THE CONTRACTOR IS RESPONSIBLE FOR DETERMINING THE ADEQUATE THICKNESS REQUIRED FOR INTERMEDIATE PAVING. INCREASES IN THE DESIGN PAVEMENT SECTION TO FACILITATE INTERMEDIATE PAVING SHALL BE PROVIDED AT NO ADDITIONAL COST.
2. THE CONTRACTOR SHALL BE RESPONSIBLE FOR PROTECTING PAVEMENT DURING ALL PHASES OF WORK. THE FINAL SURFACE OF PAVEMENT SHALL BE FREE OF ALL DEFECTS OR DAMAGE.
3. CONTRACTOR IS RESPONSIBLE FOR THEIR OWN QC TESTING, PROOF ROLL, AND REQUIREMENTS NOTED IN SPECIFICATIONS.
4. OWNER WILL ACQUIRE 3RD PARTY QC TESTING SERVICES FOR SOILS AND PAVEMENTS.
5. REFER TO NCDOT SPECIFICATIONS FOR ADDITIONAL INFORMATION.

1 2 3 ASPHALT PAVEMENT N.T.S.

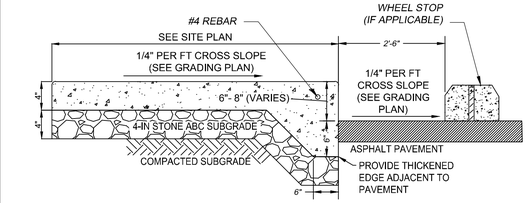

TYPICAL MONOLITHIC SIDEWALK EDGE ABUTTING ASPHALT
NTS

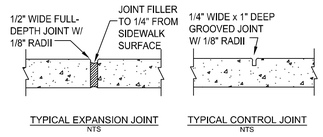

TYPICAL EXPANSION JOINT
NTS

TYPICAL CONTROL JOINT
NTS

GENERAL NOTES:
1. PROVIDE GROOVE CONTROL JOINT 1-IN DEEP WITH 1/8-IN RADII IN SIDEWALK AT 5' INTERVALS UNLESS INDICATED OTHERWISE.
2. PROVIDE 1/2-IN EXPANSION JOINT AT 50' INTERVALS.
3. PROVIDE 1/2-IN EXPANSION JOINT WHERE THE SIDEWALK ABUTS ANY RIGID STRUCTURE.
4. SEE NCDOT SPECIFICATIONS FOR ADDITIONAL JOINT SPACING REQUIREMENTS.
5. ALL CONCRETE SHALL BE 3,000 P.S.I. WITH BROOM FINISH.
6. ALL SIDEWALKS SHALL HAVE 2% OR LESS CROSS SLOPE.
7. ALL SIDEWALKS SHALL HAVE 5% OR LESS LONGITUDINAL SLOPE.

4 STANDARD DUTY CONCRETE SIDEWALK N.T.S.

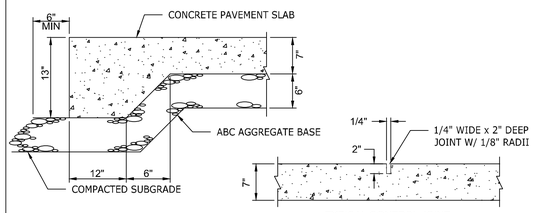

TYPICAL THICKENED EDGE
(ALL EDGES OF CONCRETE)

TYPICAL CONTROL JOINT

CONCRETE PAVEMENT DIMENSIONS
CONC SLAB THICKNESS = 7"
CABC THICKNESS = 6"
REINFORCEMENT = 6x6 - W2.9xW2.9
DOWEL RODS = 18" #5 SMOOTH BARS GREASED BOTH SIDES

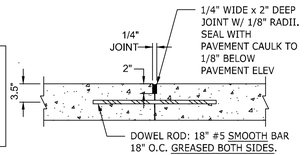

TYPICAL CONSTRUCTION JOINT

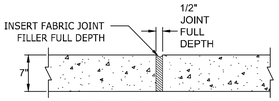

TYPICAL EXPANSION JOINT

NOTES:
1. ALL CONCRETE PAVEMENT SHALL HAVE A 28-DAY COMPRESSIVE STRENGTH OF 4,000 PSI MIN. (ASTM C39).
2. CONTROL JOINTS SHALL BE SPACED AT 10' O.C.E.W. MAX. OR AS INDICATED ON THE PLAN.
3. EXPANSION JOINTS SHALL BE SPACED AT 30' O.C.E.W. MAX. OR AS INDICATED ON THE PLAN AND WHERE CONCRETE PAVEMENT ABUTS ANY RIGID OBJECT.
4. INSTALL THICKENED EDGES ALONG ALL EDGES / SIDES OF CONCRETE PAVEMENT.
5. O.C.E.W. REFERS TO "ON CENTER EACH WAY".
6. REINFORCED CONCRETE PAVEMENT: THE THICKENED EDGE SHOWN IN CONCRETE PAVEMENT DETAIL IS REQUIRED WHERE THE CONCRETE MEETS THE ASPHALT, GRAVEL, CONCRETE MOW STRIPS, AND UNBOUND EDGES. THE 6X6 - W2.9XW2.9 REINFORCEMENT SHOWN CAN BE OMITTED EXCEPT FOR ODD-SHAPED SLABS AND SLABS CONTAINING STRUCTURES (LIGHTS, BOLLARDS, ETC.). THE REINFORCEMENT IS TO MITIGATE CRACKING DUE TO STRUCTURES. #5 SMOOTH BARS ARE TO BE
7. USED AT THE CONSTRUCTION JOINTS AS NOTED IN THE DETAIL.

5 REINFORCED CONCRETE PAVEMENT N.T.S.

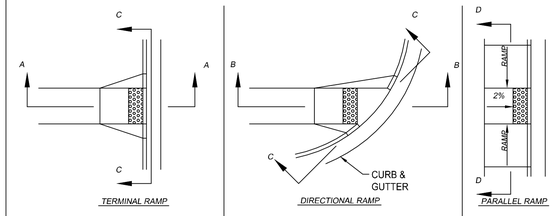

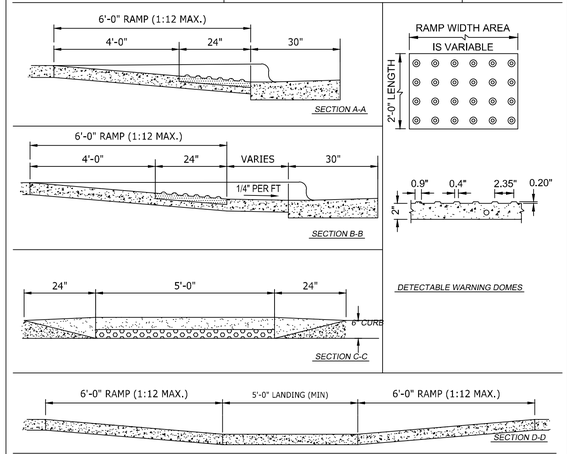

NOTES:
1. NO SLOPE ON THE SIDEWALK ACCESS RAMP SHALL EXCEED 1'/1' (1:12) IN RELATIONSHIP TO THE GRADE OF THE STREET.
2. IN NO CASE SHALL THE WIDTH OF THE ACCESS RAMP BE LESS THAN 48" (4'-0")
3. DETECTABLE WARNING DOMES SHALL COVER 2'-0" LENGTH AND FULL WIDTH OF THE RAMP FLOOR AS SHOWN.

6 ACCESSIBLE CONCRETE CURB RAMPS N.T.S.

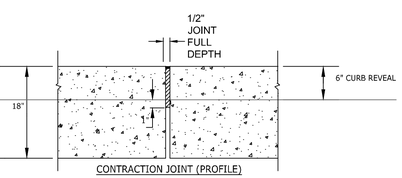

CONTRACTION JOINT (PROFILE)

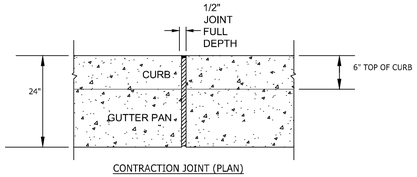

CONTRACTION JOINT (PLAN)

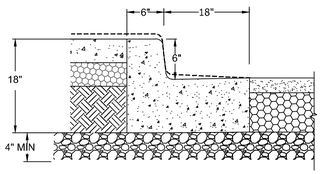

NOTES:
1. LOCATE CONTRACTION JOINTS 10' MAXIMUM APART IN CURB & GUTTER
2. INSERT FIBERBOARD STRIPS INTO EACH CONTRACTION JOINT AND TOP WITH CAULK
3. PROVIDE ¾" RADIUS ON EACH SIDES OF JOINT.
4. REFER TO NCDOT SPECIFICATION FOR ADDITIONAL INFORMATION.

CURB & GUTTER (SECTION)

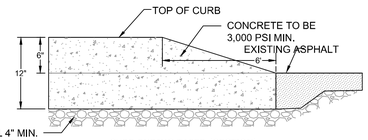

7 24" CONCRETE CURB AND GUTTER N.T.S.

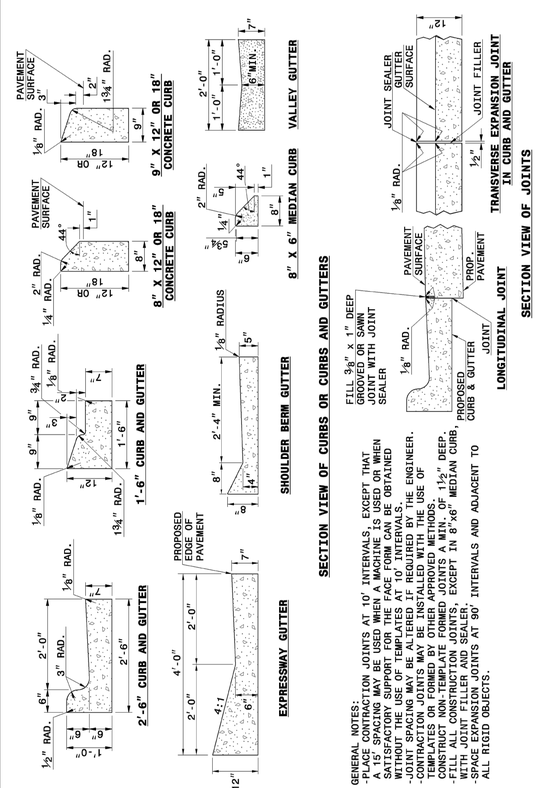

8 NCDOT CURB AND GUTTER N.T.S.

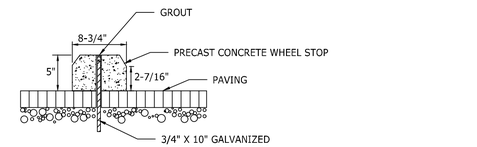

SECTION

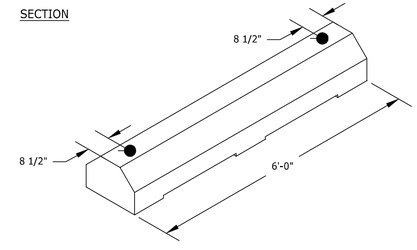

ISOMETRIC

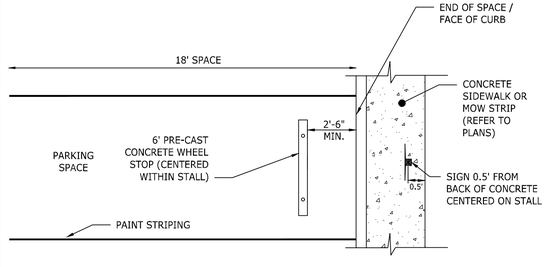

WHEEL STOP POSITION WITHIN PARKING STALL

9 PRE-CAST CONCRETE WHEELSTOP N.T.S.

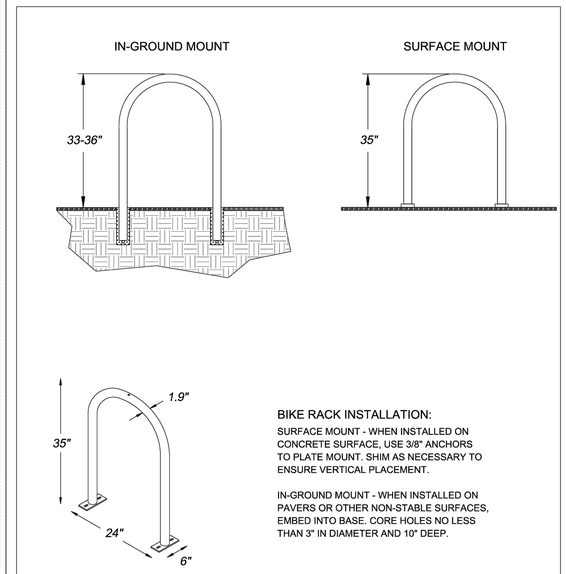

STANDARD BIKE RACK

BIKE RACK INSTALLATION:

SURFACE MOUNT - WHEN INSTALLED ON CONCRETE SURFACE, USE 3/8" ANCHORS TO PLATE MOUNT. SHIM AS NECESSARY TO ENSURE VERTICAL PLACEMENT.

IN-GROUND MOUNT - WHEN INSTALLED ON PAVERS OR OTHER NON-STABLE SURFACES, EMBED INTO BASE. CORE HOLES NO LESS THAN 3" IN DIAMETER AND 10" DEEP.

CITY OF RALEIGH
STANDARD DETAIL

REVISIONS	DATE: 8/2020	NOT TO SCALE
	BIKE RACK DETAILS	
	B-20.03	

10 BICYCLE RACK N.T.S.

FRANK LAND DESIGN, PC
UNIQUE SOLUTIONS: YOUR VISION, OUR EXPERTISE
120 MOSAIC BLVD; SUITE 200-47, PITTSBORO, NC 27312 | LICENSE #C-51141 | WWW.FRANKLANDDESIGN.COM

PRELIMINARY

NORTH CAROLINA PROFESSIONAL SEAL 055780 ENGINEER GARRETT W. FRANK

NOT FOR CONSTRUCTION

LANDSCAPE ARCHITECTURE | CIVIL ENGINEERING

REVISIONS:
11.13.25 1ST ROUND MP COMMENT REVISIONS
01.28.26 2ND ROUND MP COMMENT REVISIONS
03.06.26 3RD ROUND MP COMMENT REVISIONS
03.27.26 4TH ROUND MP COMMENT REVISIONS

CHECKED BY: G.FRANK
DATE: 04.30.2025
DESIGN / DRAWN BY: JLA
SCALE: SEE PLANS

JAKE MAY MIXED-USE PHASE #2

WAKE COUNTY, NC

0 WENDELL FALLS PARKWAY, WENDELL, NC 27591

SITE DETAILS

ISSUED FOR: MASTER PLAN
JOB NO. 1013
SHEET NO. C4.0

These plans and associated documents are the exclusive property of FRANK LAND DESIGN, PC and may not be reproduced in whole or in part and shall not be used for any purpose whatsoever, inclusive, but not limited to construction, bidding, and/or construction staking without the express written consent of FRANK LAND DESIGN, PC.

2:\1013-Jake_May_6-Acre_MU\DWG\Sheet\CD\1013-C4.0-NTDT.dwg | Plotted on 4/28/2026 4:25 PM | by Garrett Frank

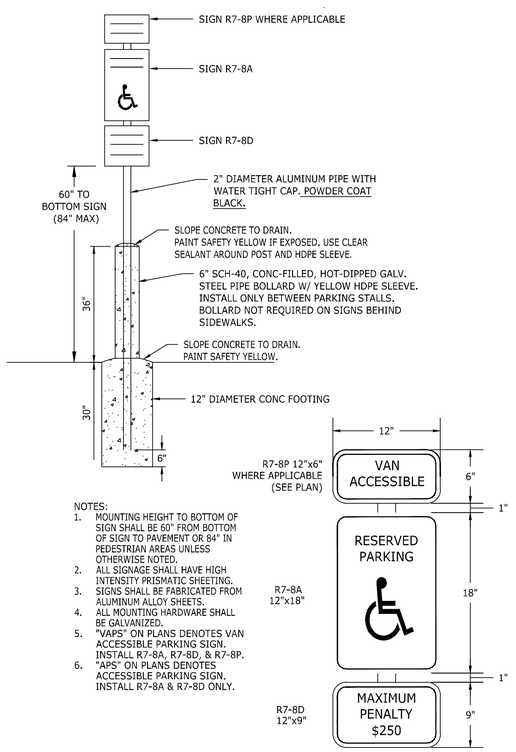

NOTES:
1. MOUNTING HEIGHT TO BOTTOM OF SIGN SHALL BE 60" FROM BOTTOM OF SIGN TO PAVEMENT OR 84" IN PEDESTRIAN AREAS UNLESS OTHERWISE NOTED.
2. ALL SIGNAGE SHALL HAVE HIGH INTENSITY PRISMATIC SHEETING.
3. SIGNS SHALL BE FABRICATED FROM ALUMINUM ALLOY SHEETS.
4. ALL MOUNTING HARDWARE SHALL BE GALVANIZED.
5. "VAPS" ON PLANS DENOTES VAN ACCESSIBLE PARKING SIGN. INSTALL R7-8A, R7-8D, & R7-8P.
6. "APS" ON PLANS DENOTES ACCESSIBLE PARKING SIGN. INSTALL R7-8A & R7-8D ONLY.

1 ACCESSIBLE PARKING SIGN N.T.S.

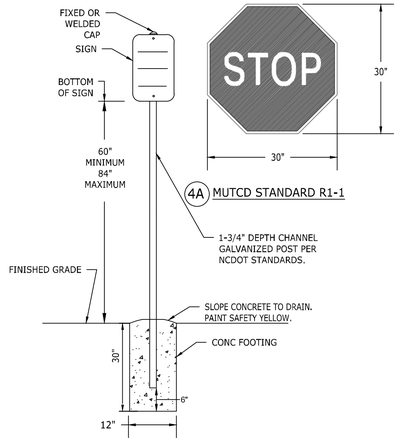

NOTES:
1. MOUNTING HEIGHT TO BOTTOM OF SIGN SHALL BE 60" FROM BOTTOM OF SIGN TO PAVEMENT OR 84" IN PEDESTRIAN AREAS UNLESS OTHERWISE NOTED.
2. ALL SIGNAGE SHALL HAVE HIGH INTENSITY PRISMATIC SHEETING.
3. SIGNS SHALL BE FABRICATED FROM ALUMINUM ALLOY SHEETS.
4. SIGNS SHOULD MEET MUTCD AND NCDOT STANDARDS AND SPECIFICATIONS FOR ROADWAY SIGNAGE AND FOUNDATIONS.

2 TYPICAL ROADWAY SIGN N.T.S.

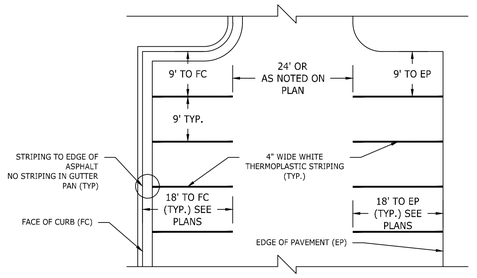

NOTE:
1. ALL PARKING STALL MARKINGS SHALL BE REFLECTORIZED 60-mil THICK WHITE THERMOPLASTIC WITH GLASS BEADS.
2. FC = FACE OF CURB
3. EP = EDGE OF PAVEMENT

3 PARKING STALL AND TRAFFIC STRIPE N.T.S.

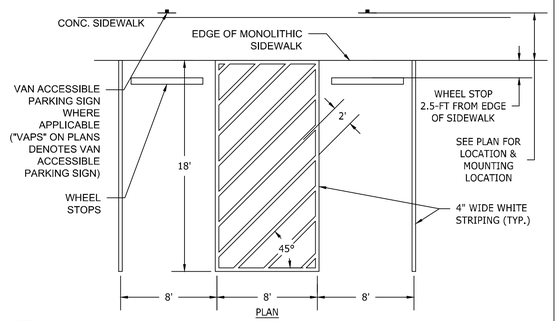

NOTE:
1. ALL PARKING STALL MARKINGS SHALL BE 15-mil THICK WHITE ALKYD RESIN PAINT WITH 2-COATS MINIMUM.

4 ACCESSIBLE PARKING LAYOUT N.T.S.

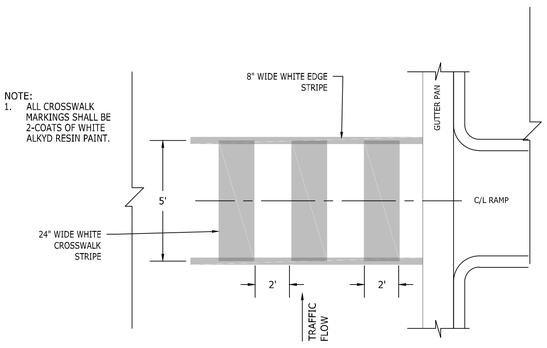

NOTE:
1. ALL CROSSWALK MARKINGS SHALL BE 2-COATS OF WHITE ALKYD RESIN PAINT.

5 HIGH VISIBILITY CROSS WALK MARKING N.T.S.

FRANK LAND DESIGN, PC
UNIQUE SOLUTIONS: YOUR VISION, OUR EXPERTISE
120 MOSAIC BLVD; SUITE 200-47, PITTSBORO, NC 27312 | LICENSE #C-5114 | WWW.FRANKLANDDESIGN.COM

PRELIMINARY

NORTH CAROLINA PROFESSIONAL SEAL 055780 ENGINEER GARRETT W. FRANK

NOT FOR CONSTRUCTION

LANDSCAPE ARCHITECTURE | CIVIL ENGINEERING

REVISIONS:
- 11.13.25 1ST ROUND MP COMMENT REVISIONS
- 01.28.26 2ND ROUND MP COMMENT REVISIONS
- 03.06.26 3RD ROUND MP COMMENT REVISIONS
- 03.27.26 4TH ROUND MP COMMENT REVISIONS

CHECKED BY:	DATE:
G.FRANK	04.30.2025
DESIGN / DRAWN BY:	SCALE:
JLA	SEE PLANS

JAKE MAY MIXED-USE PHASE #2

WAKE COUNTY, NC

0 WENDELL FALLS PARKWAY, WENDELL, NC 27591

SITE DETAILS

ISSUED FOR:	MASTER PLAN
JOB NO.	1013
SHEET NO.	C4.1

These plans and associated documents are the exclusive property of FRANK LAND DESIGN, PC and may not be reproduced in whole or in part and shall not be used for any purpose whatsoever, inclusive, but not limited to construction, bidding, and/or construction staking without the express written consent of FRANK LAND DESIGN, PC.

Z:\1013-Jake_May_6-Acre_MU\DWG\Sheet\CD\1013-C4.0-NTDT.dwg | Plotted on 4/28/2026 4:26 PM | by Garrett Frank

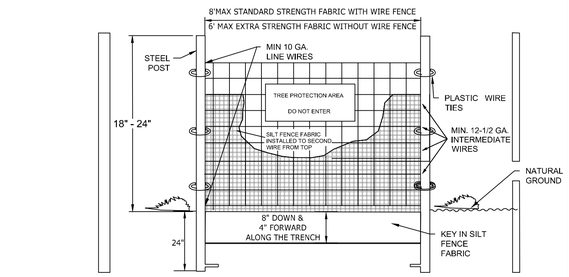

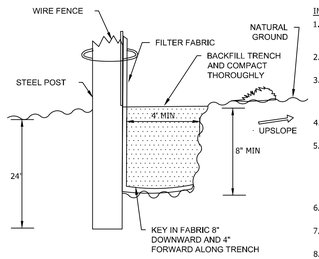

SILT FENCE KEY-IN DETAIL



PLACE SIGN ON ALL TREE PROTECTION FENCING AND WHERE SILT FENCE REPLACES TREE PROTECTION FENCING.

TREE PROTECTION AREA SIGNAGE

INSTALLATION SPECIFICATIONS:

1. THE BASE OF BOTH END POSTS SHOULD BE AT LEAST ON FOOT HIGHER THAN THE MIDDLE OF THE FENCE. CHECK WITH A LEVEL IF NECESSARY.
2. INSTALL POSTS 4 FEET APART IN CRITICAL AREAS AND 6 FEET APART ON STANDARD APPLICATIONS.
3. INSTALL POSTS 2 FEET DEEP ON THE DOWNSTREAM SIDE OF THE SILT FENCE, AND AS CLOSE AS POSSIBLE TO THE FABRIC, ENABLING POSTS TO SUPPORT THE FABRIC FROM UPSTREAM WATER PRESSURE.
4. INSTALL POSTS WITH THE NIPPLES FACING AWAY FROM THE SILT FABRIC.
5. ATTACH THE FABRIC TO EACH POST WITH THREE TIES, ALL SPACED WITHIN THE TOP 8 INCHES OF THE FABRIC. ATTACH EACH TIE DIAGONALLY 45 DEGREES THROUGH THE FABRIC, WITH EACH PUNCTURE AT LEAST 1 INCH VERTICALLY APART. ALSO, EACH TIE SHOULD BE POSITIONED TO HANG ON A POST NIPPLE WHEN TIGHTENED TO PREVENT SAGGING.
6. WRAP APPROXIMATELY 6 INCHES OF FABRIC AROUND THE END POSTS AND SECURE WITH 3 TIES.
7. NO MORE THAN 24 INCHES OF A 36 INCH FABRIC IS ALLOWED ABOVE GROUND LEVEL.
8. THE INSTALLATION SHOULD BE CHECKED AND CORRECTED FOR ANY DEVIATIONS BEFORE COMPACTION.
9. COMPACTION IS VITALLY IMPORTANT FOR EFFECTIVE RESULTS. COMPACT THE SOIL IMMEDIATELY NEXT TO THE SILT FENCE WITH THE FRONT WHEEL OF THE TRACTOR, SKID STEER, OR ROLLER EXERTING AT LEAST 60 POUNDS PER SQUARE INCH. COMPACT THE UPSTREAM SIDE FIRST, AND THEN EACH SIDE TWICE FOR A TOTAL OF FOUR TRIPS.
10. TREE PROTECTION SIGNS ARE TO BE PLACED EVERY 50-FT AND FENCE MUST REMAIN UNTIL CLOSEOUT OF PROJECT.

MAINTENANCE:

1. INSPECT SEDIMENT FENCES AT LEAST ONCE A WEEK AND AFTER EACH RAINFALL. MAKE ANY REQUIRED REPAIRS IMMEDIATELY.
2. SHOULD THE FABRIC OF A SEDIMENT FENCE COLLAPSE, TEAR, DECOMPOSE, OR BECOME INEFFECTIVE, REPLACE IT IMMEDIATELY.
3. REMOVE SEDIMENT DEPOSITS AS NECESSARY TO PROVIDE ADEQUATE STORAGE VOLUME FOR THE NEXT RAIN AND TO REDUCE PRESSURE ON THE FENCE. TAKE CARE TO AVOID UNDERMINING THE FENCE DURING CLEANOUT.
4. REMOVE ALL FENCING MATERIALS AND UNSTABLE SEDIMENT DEPOSITS AND BRING THE AREA TO GRADE AND STABILIZE IT AFTER THE CONTRIBUTING DRAINAGE AREA HAS BEEN PROPERLY STABILIZED.

(1) SILT / TREE COMBINATION FENCE N.T.S.

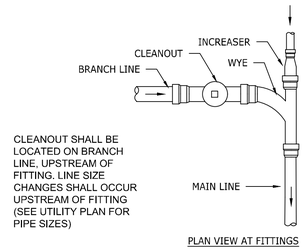

CLEANOUT SHALL BE LOCATED ON BRANCH LINE, UPSTREAM OF FITTING. LINE SIZE CHANGES SHALL OCCUR UPSTREAM OF FITTING (SEE UTILITY PLAN FOR PIPE SIZES)

PLAN VIEW AT FITTINGS

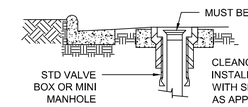

CLEANOUT IN PVMT SHALL BE INSTALLED INSIDE A VALVE BOX WITH SEWER OR STORM COVER AS APPLICABLE.

PAVEMENT INSTALLATION

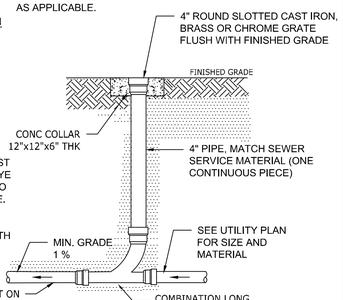

NOTES:
1. RISER STACK SHALL BE 4" CAST IRON. PROVIDE REDUCING WYE AS NEEDED TO TRANSITION TO DIFFERING LATERAL PIPE SIZE.
2. THE FULL LENGTH OF THE SERVICE DITCH SHALL BE COMPACTED IN 6" LAYERS WITH MECHANICL TAMP.

TYPICAL INSTALLATION

NOTES:

THE FULL LENGTH OF THE SERVICE DITCH BE COMPACTED IN 6" LAYERS WITH MECHANICAL TAMP.

(2) STANDARD CLEANOUT N.T.S.

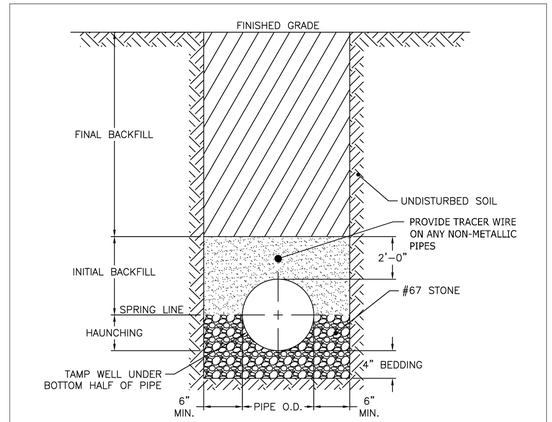

TYPICAL TRENCH BOTTOM DIMENSIONS FOR SDR 35 PVC GRAVITY PIPE

NOTES:
1. FOR TRENCHES REQUIRING SHORING AND BRACING, DIMENSIONS SHALL BE TAKEN FROM THE INSIDE FACE OF THE SHORING AND BRACING.
2. NO ROCKS OR BOULDERS, 4" OR LARGER, TO BE USED IN INITIAL BACKFILL.
3. ALL BACKFILL MATERIAL SHALL BE SUITABLE NATIVE MATERIAL.
4. BACKFILL SHALL BE TAMPED IN 6" LIFTS IN TRAFFIC AREAS, 12" IN NON-TRAFFIC AREAS.

CITY OF RALEIGH
STANDARD DETAIL

REVISIONS	DATE: 01/19/2025	NOT TO SCALE
	TRENCH BOTTOM DIMENSIONS & BACKFILLING REQUIREMENTS FOR PVC GRAVITY SEWER MAIN	
	S-5	

(3) SEWER LINE TRENCH AND BACKFILL N.T.S.

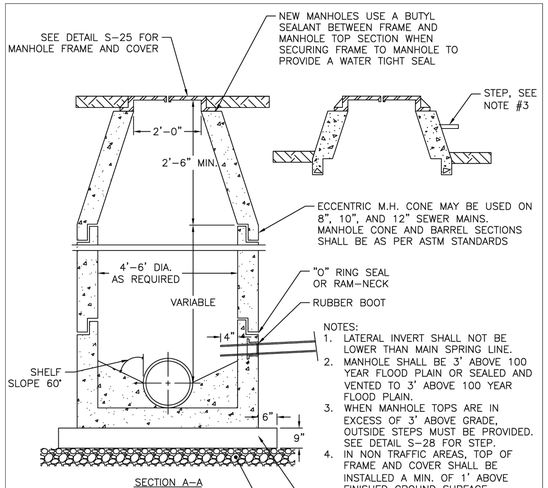

NOTES:
1. LATERAL INVERT SHALL NOT BE LOWER THAN MAIN SPRING LINE.
2. MANHOLE SHALL BE 3' ABOVE 100 YEAR FLOOD PLAIN OR SEALED AND VENTED TO 3' ABOVE 100 YEAR FLOOD PLAIN.
3. WHEN MANHOLE TOPS ARE IN EXCESS OF 3' ABOVE GRADE, OUTSIDE STEPS MUST BE PROVIDED. SEE DETAIL S-28 FOR STEP.
4. IN NON TRAFFIC AREAS, TOP OF FRAME AND COVER SHALL BE INSTALLED A MIN. OF 1' ABOVE FINISHED GROUND SURFACE.

CITY OF RALEIGH
STANDARD DETAIL

REVISIONS	DATE: 01/19/2025	NOT TO SCALE
	STANDARD PRECAST SANITARY SEWER MANHOLE	
	S-20	

(4) SANITARY SEWER MANHOLE N.T.S.

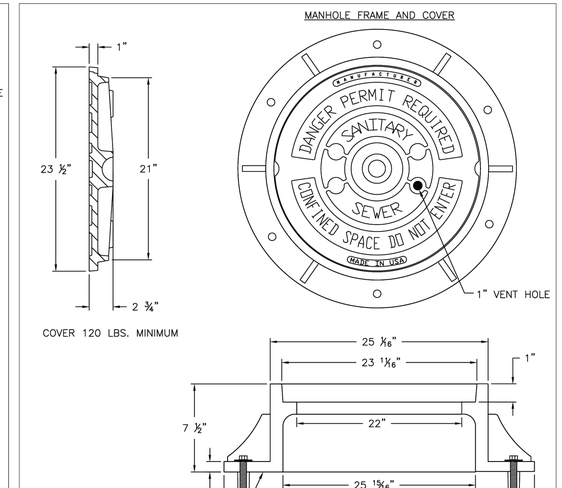

NOTES:
1. ALL MANHOLE FRAMES SHALL BE DOMESTICALLY CAST.
2. FRAME SHALL BE A MINIMUM WEIGHT OF 182 LBS. WITHIN PUBLIC ROW AND 160 LBS. WITHIN EASEMENTS.
3. COVER SHALL WEIGH A MIN. OF 120 LBS.
4. ALL MANHOLE FRAMES OUTSIDE OF PAVED SURFACES SHALL BE BOLTED TO THE CONE SECTION OR RING WITH A MINIMUM OF 4 BOLTS PER FRAME.

CITY OF RALEIGH
STANDARD DETAIL

REVISIONS	DATE: 01/19/2025	NOT TO SCALE
	STANDARD MANHOLE COVER	
	S-25	

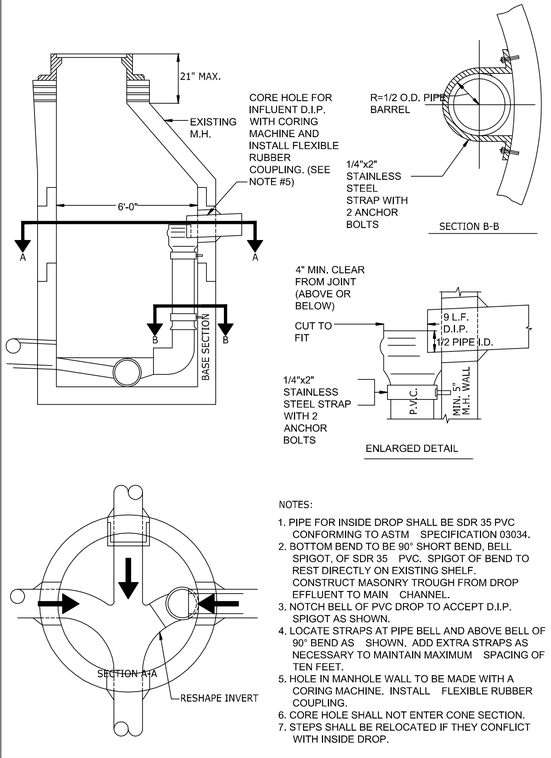

NOTES:
1. PIPE FOR INSIDE DROP SHALL BE SDR 35 PVC CONFORMING TO ASTM SPECIFICATION 03034.
2. BOTTOM BEND TO BE 90° SHORT BEND, BELL SPIGOT, OF SDR 35 PVC. SPIGOT OF BEND TO REST DIRECTLY ON EXISTING SHELF. CONSTRUCT MASONRY TROUGH FROM DROP EFFLUENT TO MAIN CHANNEL.
3. NOTCH BELL OF PVC DROP TO ACCEPT D.I.P. SPIGOT AS SHOWN.
4. LOCATE STRAPS AT PIPE BELL AND ABOVE BELL OF 90° BEND AS SHOWN, ADD EXTRA STRAPS AS NECESSARY TO MAINTAIN MAXIMUM SPACING OF TEN FEET.
5. HOLE IN MANHOLE WALL TO BE MADE WITH A CORING MACHINE. INSTALL FLEXIBLE RUBBER COUPLING.
6. CORE HOLE SHALL NOT ENTER CONE SECTION.
7. STEPS SHALL BE RELOCATED IF THEY CONFLICT WITH INSIDE DROP.

(5) SANITARY SEWER INSIDE DROP CONNECTION N.T.S.

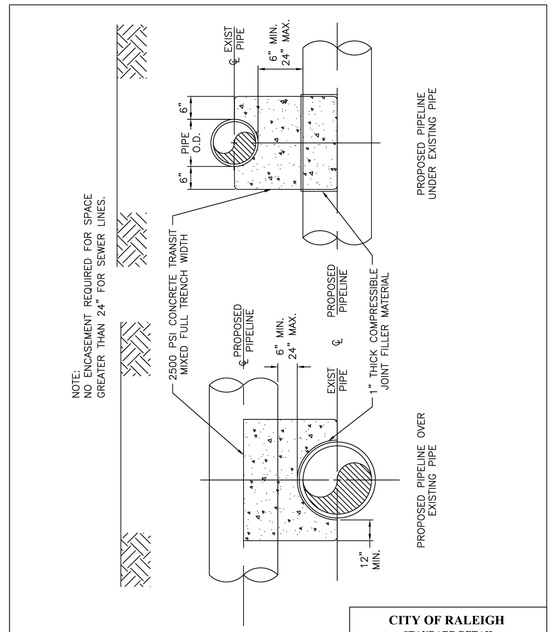

CITY OF RALEIGH
STANDARD DETAIL

REVISIONS	DATE: 01/19/2025	NOT TO SCALE
	CONCRETE CRADLE PROTECTION FOR SEWER LINE CROSSINGS	
	S-49	

(6) UTILITY CRADLE N.T.S.

FRANK LAND DESIGN, PC
UNIQUE SOLUTIONS: YOUR VISION, OUR EXPERTISE
120 MOSAIC BLVD; SUITE 200-47, PITTSBORO, NC 27312 | LICENSE #C-51141 | WWW.FRANKLANDDESIGN.COM

PRELIMINARY

NORTH CAROLINA PROFESSIONAL SEAL 055780 ENGINEER GARRETT W. FRANK

NOT FOR CONSTRUCTION

LANDSCAPE ARCHITECTURE | CIVIL ENGINEERING

REVISIONS:
- 11.13.25 1ST ROUND MP COMMENT REVISIONS
- 01.28.26 2ND ROUND MP COMMENT REVISIONS
- 03.06.26 3RD ROUND MP COMMENT REVISIONS
- 03.27.26 4TH ROUND MP COMMENT REVISIONS

CHECKED BY:	DATE:
G.FRANK	04.30.2025
DESIGN / DRAWN BY:	SCALE:
JLA	SEE PLANS

JAKE MAY MIXED-USE PHASE #2

WAKE COUNTY, NC

0 WENDELL FALLS PARKWAY, WENDELL, NC 27591

SITE DETAILS

ISSUED FOR:	MASTER PLAN
JOB NO.	1013
SHEET NO.	C4.2

These plans and associated documents are the exclusive property of FRANK LAND DESIGN, PC, and may not be reproduced in whole or in part and shall not be used for any purpose whatsoever, inclusive, but not limited to construction, bidding, and/or construction staking without the express written consent of FRANK LAND DESIGN, PC.

Z:\1013-Jake_May_6-Acre_MU\DWG\Sheet\CD\1013-C4.0-NTDT.dwg | Plotted on 4/28/2026 4:26 PM | by Garrett Frank

LOCALLY AVAILABLE SIZES	
INTERCEPTORS CAPACITY (GAL.)	SEPARATORS CAPACITY (GAL.)
300	1000
550	1200
750	1600
1000	
1200	
1500	
2000	
2500	
3000	
4000	
5000	
6000	
8000	

NOTES:

1. BAFFLE WALL LOCATED AT A DISTANCE FROM INLET WALL 2/3 TO 3/4 OF THE TOTAL LENGTH OF THE INTERCEPTOR OR SEPARATOR AS SHOWN ON DETAIL S-40.
   BAFFLE WALLS LOCATED AT A DISTANCE APPROXIMATELY OF 1/2 OF THE TOTAL LENGTH OF THE SEPARATOR AS SHOWN ON DETAIL S-40.01.
2. EACH INTERCEPTOR OR SEPARATOR SHALL HAVE INLET AND OUTLET TEES. THE OUTLET TEE SHALL EXTEND 50% INTO THE LIQUID DEPTH. THE INLET TEE SHALL EXTEND 25% INTO THE LIQUID DEPTH. INLET AND OUTLET TEES MUST BE OPEN TO ALLOW THE COLLECTION OF F.O.G. SAMPLE.
3. ACESS OPENINGS OVER EACH COMPARTMENT WITHIN THE INTERCEPTOR OR SEPARATOR SHALL BE 24 INCHES IN DIAMETER AND CONTAIN PICK HOLES. ALL COVERS SHALL BE CONSTRUCTED OF CAST IRON OR EQUIVALENT TRAFFIC BEARING MATERIAL. MANHOLE COVERS MUST EXTEND TO FINISH GRADE AND BE INSTALLED TO EXCLUDE THE ENTRANCE OF STORMWATER INTO THE INTERCEPTOR OR SEPARATOR.
4. FULL SIZE DUAL SWEEP CLEANOUTS SHALL BE INSTALLED ON THE INLET AND OUTLET SIDES OF THE INTERCEPTOR OR SEPARATOR.
5. INTERCEPTORS AND SEPARATORS MUST BE VENTED IN ACCORDANCE WITH THE NC STATE PLUMBING CODE.
6. CONCRETE: 4000 PSI @ 28 DAYS.
7. DESIGN: ACI 318 BUILDING CODE
   ASTM C1613-06 FOR GREASE INTERCEPTORS
   ASTM C913-02 FOR WATER AND WASTEWATER STRUCTURES
   ASTM C890-06 FOR MINIMAL STRUCTURAL DESIGN LOADING
8. INTERCEPTORS AND SEPARATORS SHALL BE DESIGNED TO WITHSTAND AN H-20 WHEEL LOAD.
9. INTERCEPTORS OR SEPARATORS MADE OF POLYETHYLENE OR FIBERGLASS SHALL INCLUDE A MINIMUM 12,000 PSI TENSILE STRENGTH, 19,000 PSI FLEXURAL STRENGTH, AND 800,000 PSI FLEXURAL MODULUS.
10. ALL INTERCEPTORS AND SEPARATORS SHALL BE INSTALLED IN ACCORDANCE WITH THE MANUFACTURERS SPECIFICATIONS.

CITY OF RALEIGH
DEPARTMENT OF PUBLIC UTILITIES
DIMENSIONS: GREASE INTERCEPTORS
OIL-WATER-SAND SEPARATORS

DWG. NO.	REVISIONS	DATE	REVISIONS	DATE
S-41	RRH 3/9/00		D.H.L.	6/18/08
	ABB	3/19/04		

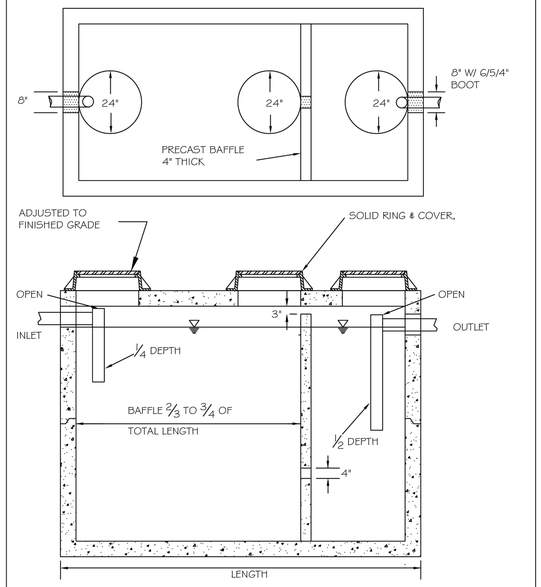

NOTES:
1. REINFORCEMENT: H-20 BRIDGE LOADING (TRAFFIC RATED)
2. CONCRETE: 4000 PSI @28 DAYS
3. EARTHCOVER: 0' TO 5' MAX.

CITY OF RALEIGH
DEPARTMENT OF PUBLIC UTILITIES
1000 GALLON GREASE INTERCEPTOR

DWG. NO.	REVISIONS	DATE	REVISIONS	DATE
S-40	RRH 3/9/00		D.H.L.	6/18/08
	ABB	3/19/04		

1 GREASE TRAP N.T.S.

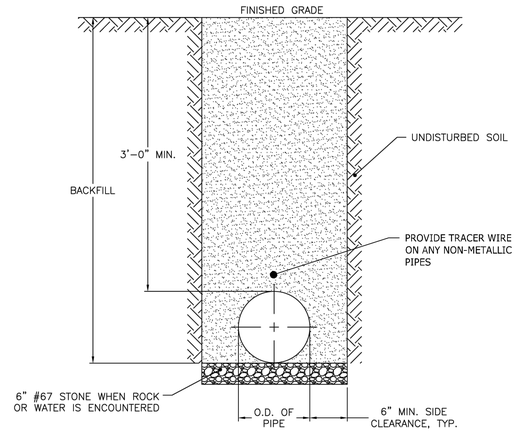

NOTES:
1. TRENCHES REQUIRING SHORING AND BRACING, DIMENSIONS SHALL BE TAKEN FROM THE INSIDE FACE OF THE SHORING AND BRACING.
2. NO ROCKS OR BOULDERS 4" OR LARGER TO BE USED IN BACKFILL.
3. ALL BACKFILL MATERIAL SHALL BE SUITABLE NATIVE MATERIAL.
4. BACKFILL SHALL BE TAMPED IN 6" LIFTS.
5. ACHIEVE 95% COMPACTION IN BACKFILL.

CITY OF RALEIGH
STANDARD DETAIL

REVISIONS	DATE: 01/18/2025 NOT TO SCALE
	TRENCH BOTTOM DIMENSIONS AND BACKFILLING REQUIREMENTS FOR DUCTILE IRON
	W-3

2 WATER LINE BACKFILL N.T.S.

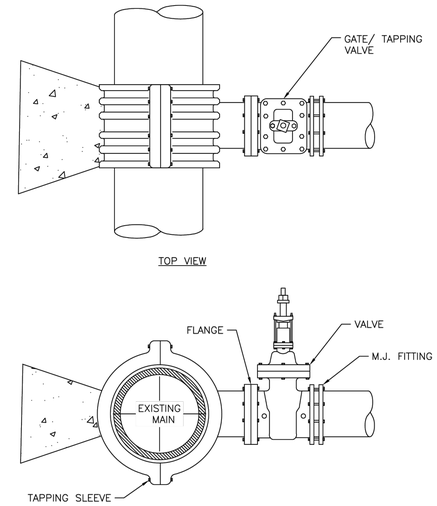

NOTES:
1. CONCRETE SHALL NOT CONTACT BOLTS OR ENDS OF MECHANICAL JOINT FITTINGS.
2. SEE DETAIL W-10 & W-11 (REACTION BLOCK TABLES) FOR AREA OF CONCRETE REQUIRED.
3. 3,000 PSI SOLID CONCRETE SHALL BE USED AS FOOTING FOR DUCTILE IRON PIPE.
4. FULL CIRCUMFERENCE SLEEVE, STAINLESS STEEL MATERIAL REQUIRED.

CITY OF RALEIGH
STANDARD DETAIL

REVISIONS	DATE: 01/18/2025 NOT TO SCALE
	4"-24" STANDARD TAPPING SLEEVE AND VALVE ASSEMBLY
	W-14

3 TAPPING SLEEVE, VALVE AN THRUST BLOCKING N.T.S.

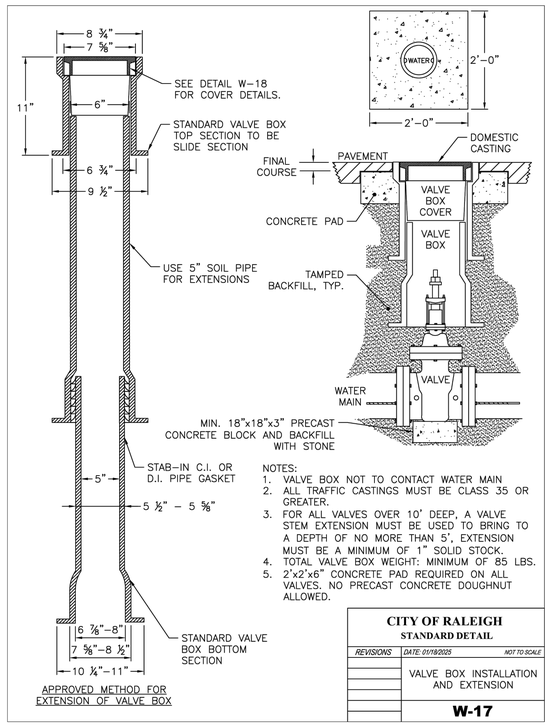

NOTES:
1. VALVE BOX NOT TO CONTACT WATER MAIN
2. ALL TRAFFIC CASTINGS MUST BE CLASS 35 OR GREATER.
3. FOR ALL VALVES OVER 10' DEEP, A VALVE STEM EXTENSION MUST BE USED TO BRING TO A DEPTH OF NO MORE THAN 5', EXTENSION MUST BE A MINIMUM OF 1" SOLID STOCK.
4. TOTAL VALVE BOX WEIGHT: MINIMUM OF 85 LBS.
5. 2'x2'x6" CONCRETE PAD REQUIRED ON ALL VALVES. NO PRECAST CONCRETE DOUGHNUT ALLOWED.

CITY OF RALEIGH
STANDARD DETAIL

REVISIONS	DATE: 01/18/2025 NOT TO SCALE
	VALVE BOX INSTALLATION AND EXTENSION
	W-17

4 GATE VALVE AND RISER N.T.S.

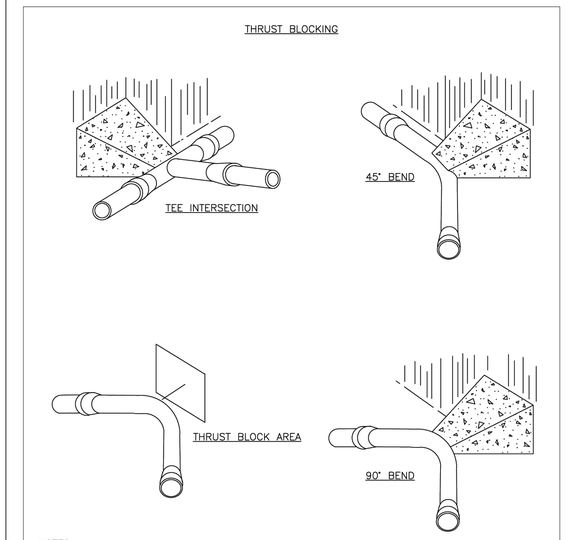

NOTES:
1. CONCRETE SHALL BE 3,000 PSI.
2. CONCRETE SHALL NOT CONTACT BOLTS OR ENDS OF MECHANICAL JOINT FITTINGS.
3. TRENCHES SHALL CONFORM TO DETAIL W-3.
4. SEE DETAIL W-10 & W-11 (THRUST BLOCK TABLES) FOR AREA OF CONCRETE REQUIRED.
5. ALL BENDS AND INTERSECTIONS SHALL HAVE CONCRETE THRUST BLOCKING.

CITY OF RALEIGH
STANDARD DETAIL

REVISIONS	DATE: 01/18/2025 NOT TO SCALE
	THRUST BLOCKING VIEWS
	W-9

5 THRUST BLOCK FOR WATER LINES N.T.S.

REACTION BEARING AREAS FOR HORIZONTAL WATER PIPE BENDS BASED ON TEST PRESSURE OF 200 PSI
ALL AREAS GIVEN IN SQUARE FEET

SIZE OF BEND	DEGREE OF BEND	STATIC THRUST IN POUNDS	MODERATELY DRY CLAY 4,000 LBS/FT²	SOFT CLAY 2,000 LBS/FT²	1,600 LBS/FT² GRAVEL/ COARSE SAND	8,000 LBS/FT² DRY CLAY (ALWAYS DRY)	SAND, COMPACT FIRM 8,000 LBS/FT²	SAND-CLEAN DRY 4,000 LBS/FT²	SOIL 1,000 LBS/FT² QUICKSAND (VERY POOR)	ROCK-POOR 10,000 LBS/FT²
6"	11 1/4°	1,108	1	1	1	1	1	1	2	1
	22 1/2°	2,207	1	2	2	1	1	1	3	1
	45°	4,328	2	3	3	1	1	2	5	1
	90°	7,996	2	4	5	1	1	2	8	1
	PLUG	5,655	2	3	4	1	1	2	6	1
8"	11 1/4°	1,970	1	1	2	1	1	1	2	1
	22 1/2°	3,922	1	2	3	1	1	1	4	1
	45°	7,694	2	4	5	1	1	2	8	1
	90°	14,215	4	8	9	2	2	4	15	2
	PLUG	10,053	3	5	6	2	2	3	10	1
12"	11 1/4°	4,433	2	3	3	1	1	2	5	1
	22 1/2°	8,826	3	5	6	2	2	3	9	1
	45°	17,312	5	9	11	3	3	5	18	2
	90°	31,983	8	16	19	4	4	8	32	4
	PLUG	22,619	6	12	14	3	3	6	23	3
16"	11 1/4°	7,881	2	4	5	1	1	2	8	1
	22 1/2°	15,691	4	8	10	2	2	4	16	2
	45°	30,779	8	16	19	4	4	8	31	4
	90°	56,861	15	29	35	8	8	15	57	6
	PLUG	40,213	10	21	25	5	5	10	41	5

NOTES:
1. REACTION BEARING AREAS ARE IN SQUARE FEET MEASURED IN A VERTICAL PLANE IN THE TRENCH SIDE AT AN ANGLE OF 90° TO THE THRUST VECTOR.
2. USE 6" 90° BEND VALUE FOR HYDRANTS FOR ADDITIONAL SAFETY FACTOR.

CITY OF RALEIGH
STANDARD DETAIL

REVISIONS	DATE: 01/18/2025 NOT TO SCALE
	THRUST BLOCKING DESIGN QUANTITY TABLE
	W-10

6 4" WATER METER AND VAULT N.T.S.

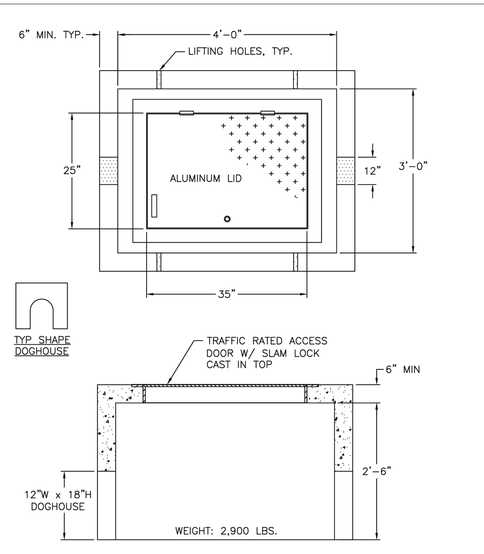

NOTES:
1. REINFORCEMENT: #4 @ 6" O.C.E.W.
2. CONCRETE: 4,000 PSI @ 28 DAYS.
3. 6" OF #67 STONE SHALL BE PLACED IN BOTTOM OF VAULT.
4. METER FLANGE SHALL BE PLACED 42" BELOW FINISHED GRADE.
5. HEIGHT ADJUSTMENTS ALLOWED BY PRECAST RISERS OR BRICK AND MORTAR. DRY STACKING OF BLOCK IS NOT ALLOWED.

CITY OF RALEIGH
STANDARD DETAIL

REVISIONS	DATE: 01/18/2025 NOT TO SCALE
	TYPICAL 4" WATER METER VAULT
	W-32

FRANK LAND DESIGN, PC
UNIQUE SOLUTIONS: YOUR VISION, OUR EXPERTISE
120 MOSAIC BLVD; SUITE 200-47, PITTSBORO, NC 27312 | LICENSE #C-51141 | WWW.FRANKLANDDESIGN.COM

PRELIMINARY

NORTH CAROLINA PROFESSIONAL SEAL 055780 ENGINEER GARRETT W. FRANK

NOT FOR CONSTRUCTION

LANDSCAPE ARCHITECTURE | CIVIL ENGINEERING

REVISIONS:	
11.13.25	1ST ROUND MP COMMENT REVISIONS
01.28.26	2ND ROUND MP COMMENT REVISIONS
03.06.26	3RD ROUND MP COMMENT REVISIONS
03.27.26	4TH ROUND MP COMMENT REVISIONS

CHECKED BY:	DATE:
G.FRANK	04.30.2025
DESIGN / DRAWN BY:	SCALE:
JLA	SEE PLANS

JAKE MAY MIXED-USE PHASE #2

WAKE COUNTY, NC

0 WENDELL FALLS PARKWAY, WENDELL, NC 27591

SITE DETAILS

ISSUED FOR:	MASTER PLAN
JOB NO.	1013
SHEET NO.	C4.3

These plans and associated documents are the exclusive property of FRANK LAND DESIGN, PC, and may not be reproduced in whole or in part and shall not be used for any purpose whatsoever, inclusive, but not limited to construction, bidding, and/or construction staking without the express written consent of FRANK LAND DESIGN, PC.

Z:\1013-Jake_May_6-Acre_MU\DWG\Sheet\CD\1013-C4.0-NTDT.dwg | Plotted on 4/28/2026 4:26 PM | by Garrett Frank

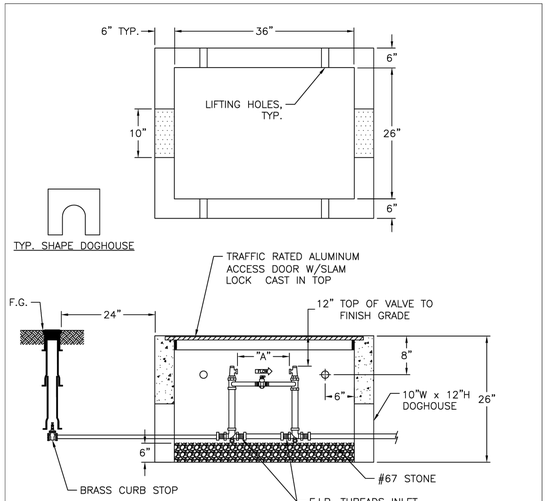

NOTES:
1. METER AS MANUFACTURED BY SENSUS OR NEPTUNE. METER TO BE PROVIDED BY RALEIGH WATER.
2. BACKFILL TAMPED IN 6" LIFTS.
3. REINFORCEMENT: #4 @ 6" O.C.E.W.
4. CONCRETE: 4,000 PSI @ 28 DAYS.
5. ALL RPZ BACKFLOW PREVENTION DEVICES MUST BE INSTALLED PRIOR TO METER BEING SET.
6. ALL COPPER SETTERS ARE TO HAVE A BALL TYPE SHUT OFF VALVE ON BOTH SIDES OF COPPER SETTER WITH HIGH RISE BYPASS THAT IS MANUFACTURED BY FORD, MUELLER, OR AY McDONALD (NO EXCEPTIONS).
7. HEIGHT ADJUSTMENTS ALLOWED BY PRECAST RISERS OR BRICK AND MORTAR. DRY STACKING OF BLOCK IS NOT ALLOWED.

"A"	
1 ½" METER	13 ¼"
2" METER	17 ¼"

** TRAFFIC RATED VAULT WALL THICKNESS

CITY OF RALEIGH
STANDARD DETAIL

REVISIONS	DATE: 01/18/2025	NOT TO SCALE
	TYPICAL 1 ½"–2" WATER METER BOX INSTALLATION	
	W-31	

1 2" WATER METER AND VAULT N.T.S.

NOTES:
1. SIZE ENCLOSURE AND HEATERS BASED ON SIZE OF THE BACKFLOW PREVENTER PER MANUFACTURER RECOMMENDATIONS.
2. PROVIDE COMPLETE ASSEMBLY IN ACCORDANCE WITH THE CITY OF RALEIGH STANDARDS OR INSPECTION POLICY. COORDINATE WITH WATER AUTHORITY IN ADVANCE OF CONSTRUCTION.
3. DOMESTIC REDUCED PRESSURE ZONE ASSEMBLY BASIS OF DESIGN IS WILKINS 975XL2. OTHER ACCEPTABLE DEVICES ARE FEBCO 860 OR WATTS 919 RPZA. COORDINATE WITH ARCHITECT AND ENGINEER.
4. SEE SPECIFICATIONS FOR ADDITIONAL REQUIREMENTS OF BACKFLOW PREVENTER, VALVES, ENCLOSURE, ETC.
5. HEATING DEVICE AND POWER LINES BY G.C., SHALL BE LISTED FOR WET LOCATIONS.
6. PROVIDE PVC SLEEVES AT ALL PIPE AND WIRE PENETRATIONS OF CONCRETE BASE SLAB.
7. SEE SHEETS ELECTRICAL FOR TAMPER SWITCHES, LOW TEMPERATURE DEVICE, AND OTHER ELECTRICAL INFORMATION.

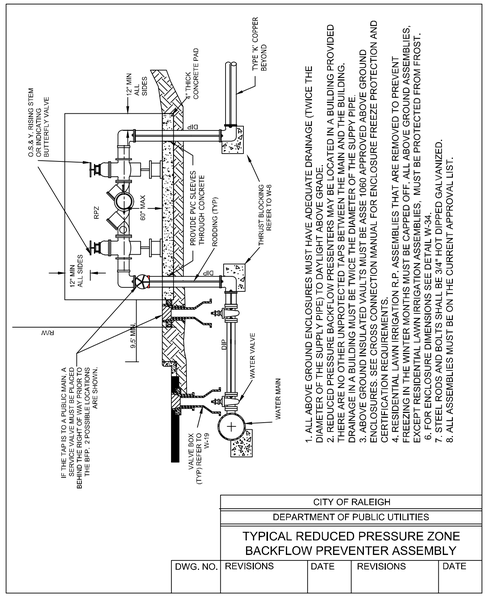

1. ALL ABOVE GROUND ENCLOSURES MUST HAVE ADEQUATE DRAINAGE (TWICE THE DIAMETER OF THE SUPPLY PIPE) TO DAYLIGHT ABOVE GRADE.
2. REDUCED PRESSURE BACKFLOW PRESENTERS MAY BE LOCATED IN A BUILDING PROVIDED THERE ARE NO OTHER UNPROTECTED TAPS BETWEEN THE MAIN AND THE BUILDING.
3. ABOVE GROUND INSULATED VAULTS MUST BE ASSE 1060 APPROVED ABOVE GROUND ENCLOSURES. SEE CROSS CONNECTION MANUAL FOR ENCLOSURE FREEZE PROTECTION AND CERTIFICATION REQUIREMENTS.
4. RESIDENTIAL IRRIGATION R.P. ASSEMBLIES THAT ARE REMOVED TO PREVENT FREEZING IN THE WINTER MONTHS MUST BE CAPPED OFF, ALL ABOVE GROUND ASSEMBLIES, EXCEPT RESIDENTIAL LAWN IRRIGATION ASSEMBLIES, MUST BE PROTECTED FROM FROST.
5. FOR ENCLOSURE DIMENSIONS SEE DETAIL W-34.
6. STEEL RODS AND BOLTS SHALL BE 3/4" HOT DIPPED GALVANIZED.
7. ALL ASSEMBLIES MUST BE ON THE CURRENT APPROVAL LIST.

CITY OF RALEIGH
DEPARTMENT OF PUBLIC UTILITIES
TYPICAL REDUCED PRESSURE ZONE BACKFLOW PREVENTER ASSEMBLY

DWG. NO.	REVISIONS	DATE	REVISIONS	DATE

2 RPZ BACKFLOW PREVENTER IN HOTBOX N.T.S.

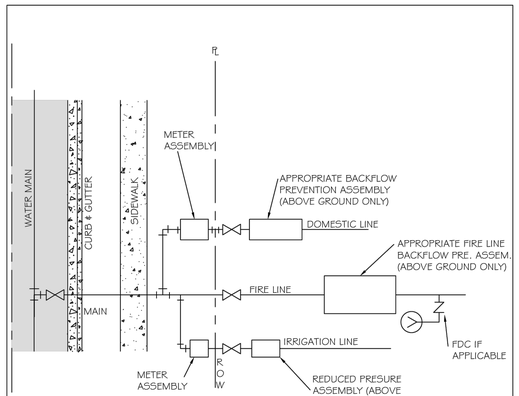

1. SERVICE TAPS FOR 2" AND SMALLER DOMESTIC SERVICES MAY BE BY CORPORATION COCKS. LARGER SERVICES WILL REQUIRE A TEE AND GATE VALVE OR TAPPING SLEEVE AND VALVE ASSEMBLY AND 90° BEND.
2. DOMESTIC SERVICE TAPS SHALL BE ALLOWED ONLY ON 6" OR LARGER FIRE LINES BEFORE THE BACKFLOW ASSEMBLY.
3. ONE DOMESTIC TAP PER FIRE LINE ON STREET SIDE OF BACKFLOW. 4. FIRE LINE SHALL HAVE A FIRE HYDRANT OR BLOW OFF ASSEMBLY AT ITS END TO FACILITATE FLUSHING WHEN NEEDED.
5. IRRIGATION METER SHALL BE LOCATED ON THE SIDE OF DOMESTIC METER WITH INCREASING ADDRESSES.
6. THE BACKFLOW SHALL BE INSTALLED NO MORE THAN 50' FROM THE METER IN A VISIBLE LOCATION.
7. DOMESTIC/IRRIGATION BACKFLOW RISER/STANDPIPE SHALL BE OF COPPER OR BRASS.
8. THE RP RELIEF VALVE SHALL BE A MINIMUM OF 12" ABOVE ANY MATERIAL (MULCH INCLUDED) OR GRADE.
9. A SERVICE VALVE IS REQUIRED AFTER THE METER BUT BEFORE THE BACKFLOW ASSEMBLY FOR MAINTENANCE AND REPLACEMENT PURPOSES.
10. THE INSTALLATION MUST ALSO MEET ALL CODE REQUIREMENTS PER THE NC PLUMBING CODE.

CITY OF RALEIGH
DEPARTMENT OF PUBLIC UTILITIES
FIRE, DOMESTIC & IRRIGATION OPTIONS SCHEMATIC

DWG. NO.	REVISIONS	DATE	REVISIONS	DATE
W-34	D.W.C.	11-18-99	A.B.B.	7-10-04
	RRH	3-31-00	D.M.L.	6/18/08

3 WATER MAIN TAPPING SCHEMATIC N.T.S.

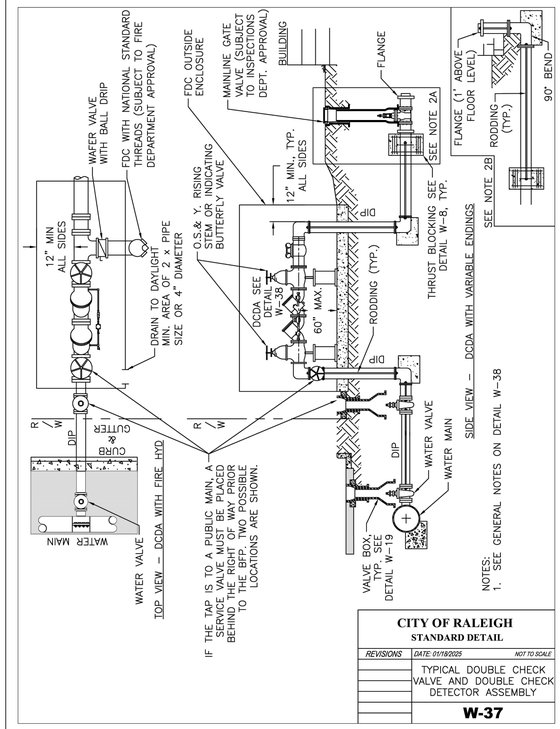

NOTES:
1. SEE GENERAL NOTES ON DETAIL W-38

CITY OF RALEIGH
STANDARD DETAIL

REVISIONS	DATE: 01/18/2025	NOT TO SCALE
	TYPICAL DOUBLE CHECK VALVE AND DOUBLE CHECK DETECTOR ASSEMBLY	
	W-37	

4 FIRE SERVICE BACKFLOW PREVENTER N.T.S.

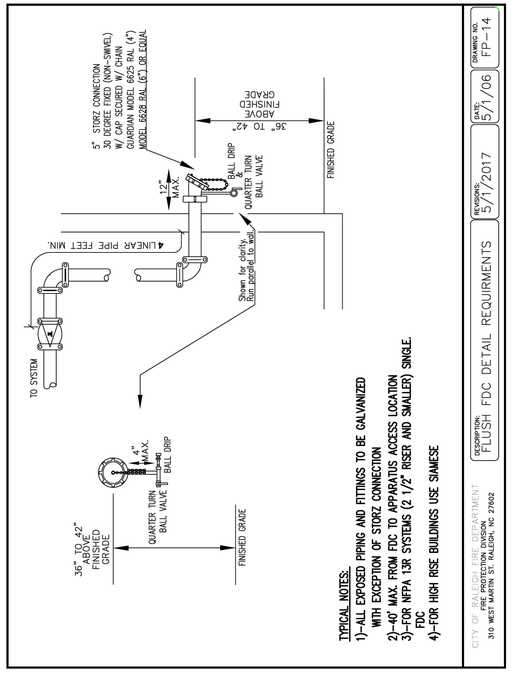

TYPICAL NOTES:
1)–ALL EXPOSED PIPING AND FITTINGS TO BE GALVANIZED WITH EXCEPTION OF STORZ CONNECTION
2)–40' MAX. FROM FDC TO APPARATUS ACCESS LOCATION
3)–FOR NFPA 13R SYSTEMS (2 1/2" RISER AND SMALLER) SINGLE. FDC
4)–FOR HIGH RISE BUILDINGS USE SIAMESE

CITY OF RALEIGH FIRE PROTECTION DIVISION 310 WEST MARTIN ST. RALEIGH, NC 27602

DESCRIPTION:	REVISIONS:	DATE:	DRAWING NO.
FLUSH FDC DETAIL REQUIRMENTS	5/1/2017	5/1/06	FP–14

5 WALL MOUNTED FDC N.T.S.

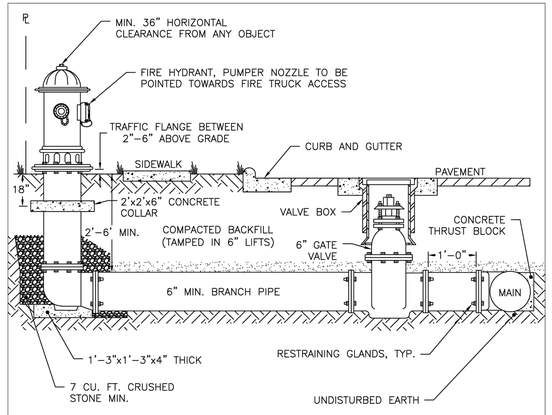

NOTES:
1. FIRE HYDRANT SHALL BE AS MANUFACTURED: MUELLER, AMERICAN DARLING, KENNEDY OR CLOW.
2. BRANCH PIPE SHALL BE DUCTILE IRON AWWA C150.
3. 6" GATE VALVE SHALL BE AWWA C500 OPEN LEFT.
4. RODS AND BOLTS SHALL BE ¾" 316 STAINLESS STEEL.
5. FIRE HYDRANTS WILL BE INSTALLED IN TRUE VERTICAL POSITION.
6. RODS SHALL NOT BE COUPLED MORE THAN ONCE. IF THE LENGTH FROM THE VALVE TO THE HYDRANT EXCEEDS 20' THEN A MECHANICAL RESTRAINING GLAND WITH A REBAR CAGE SHALL BE INSTALLED NO MORE THAN 10' FROM HYDRANT AND POURED IN CONCRETE.
7. FIRE HYDRANTS TO BE LOCATED IN ROW OR 2.5 FOOT EASEMENT (ON ALL SIDES OF HYDRANT) FOOT EASEMENT ADJACENT TO ROW.
8. ANYTIME SITE WORK, CONSTRUCTION, ROAD WORK, OR ANY OTHER WORK CHANGES THE GRADE OF THE FIRE HYDRANT, THE PERSON RESPONSIBLE FOR THE WORK IS RESPONSIBLE FOR ADJUSTING THE FIRE HYDRANT TO STAY WITHIN COMPLIANCE.

CITY OF RALEIGH
STANDARD DETAIL

REVISIONS	DATE: 01/18/2025	NOT TO SCALE
	STANDARD FIRE HYDRANT INSTALLATION (RESTRAINT GLANDS)	
	W-4	

6 STANDARD RESTRAINED JOINT FIRE HYDRANT N.T.S.

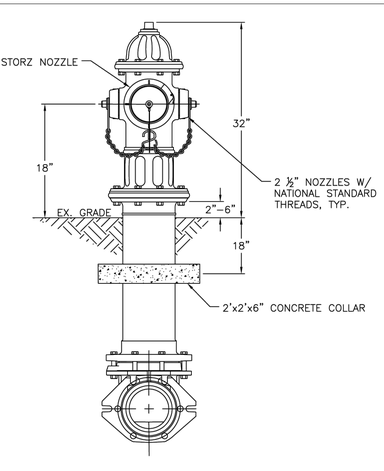

NOTES:
1. ALL PUBLIC FIRE HYDRANTS IN THE CITY OF RALEIGH AND THE MERGER TOWNS OF GARNER, ROLESVILLE, WAKE FOREST, KNIGHTDALE, WENDELL AND ZEBULON SHALL BE PAINTED CHROME YELLOW WITH HIGH REFLECTIVE ALUMINUM SILVER CAPS, BONNETS AND OPERATING NUTS.
2. ALL PRIVATE FIRE HYDRANTS SHALL BE RED.

CITY OF RALEIGH
STANDARD DETAIL

REVISIONS	DATE: 01/18/2025	NOT TO SCALE
	STANDARD FIRE HYDRANT WITH 5" STORZ PUMPER NOZZLE	
	W-5	

7 STANDARD RESTRAINED JOINT FIRE HYDRANT N.T.S.

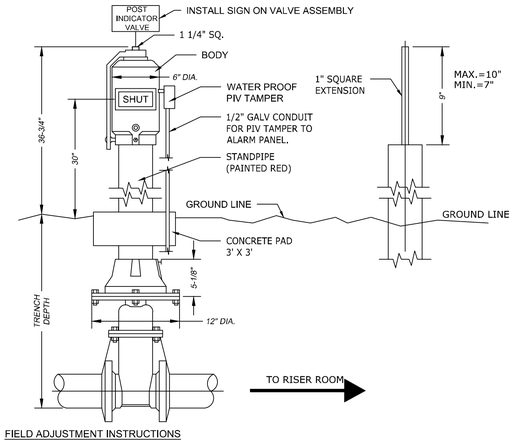

FIELD ADJUSTMENT INSTRUCTIONS

1. REMOVE THE BODY FROM THE TOP OF THE INDICATOR POST ASSEMBLY.
2. CUT THE REQUIRED LENGTH OFF THE BOTTOM OF THE STANDPIPE FOR THE GROUND LINE TO MATCH UP WITH STANDPIPE GROUND LINE MARK.
3. CUT THE 1" SQ. EXTENSION AT A DISTANCE OF 9" ABOVE THE TOP OF THE STANDPIPE.
4. SET THE "OPEN" AND "SHUT" TARGETS FOR THE APPROPRIATE VALVE SIZE.
5. RE-ATTACH THE BODY TO THE TOP OF THE INDICATOR POST ASSEMBLY.
6. ALL PIV(s) SHALL BE INSTALLED WITH AN ELECTRONICALLY CONTROLLED TAMPER SWITCH.

FRANK LAND DESIGN, PC
UNIQUE SOLUTIONS: YOUR VISION, OUR EXPERTISE
120 MOSAIC BLVD; SUITE 200-47, PITTSBORO, NC 27312 | LICENSE #C-51141 | WWW.FRANKLANDDESIGN.COM

PRELIMINARY

NORTH CAROLINA PROFESSIONAL SEAL 055780 ENGINEER GARRETT W. FRANK

NOT FOR CONSTRUCTION

LANDSCAPE ARCHITECTURE | CIVIL ENGINEERING

REVISIONS:	
11.13.25	1ST ROUND MP COMMENT REVISIONS
01.28.26	2ND ROUND MP COMMENT REVISIONS
03.06.26	3RD ROUND MP COMMENT REVISIONS
03.27.26	4TH ROUND MP COMMENT REVISIONS

CHECKED BY:	DATE:
G.FRANK	04.30.2025
DESIGN / DRAWN BY:	SCALE:
JLA	SEE PLANS

JAKE MAY MIXED-USE PHASE #2

WAKE COUNTY, NC

0 WENDELL FALLS PARKWAY, WENDELL, NC 27591

SITE DETAILS

ISSUED FOR:	MASTER PLAN
JOB NO.	1013
SHEET NO.	C4.4

These plans and associated documents are the exclusive property of FRANK LAND DESIGN, PC and may not be reproduced in whole or in part and shall not be used for any purpose whatsoever, inclusive, but not limited to construction, bidding, and/or construction staking without the express written consent of FRANK LAND DESIGN, PC.

Z:\1013-Jake_May_6-Acre_MU\DWG\Sheet\CD\1013-C4.0-NTDT.dwg | Plotted on 4/28/2026 4:26 PM | by Garrett Frank

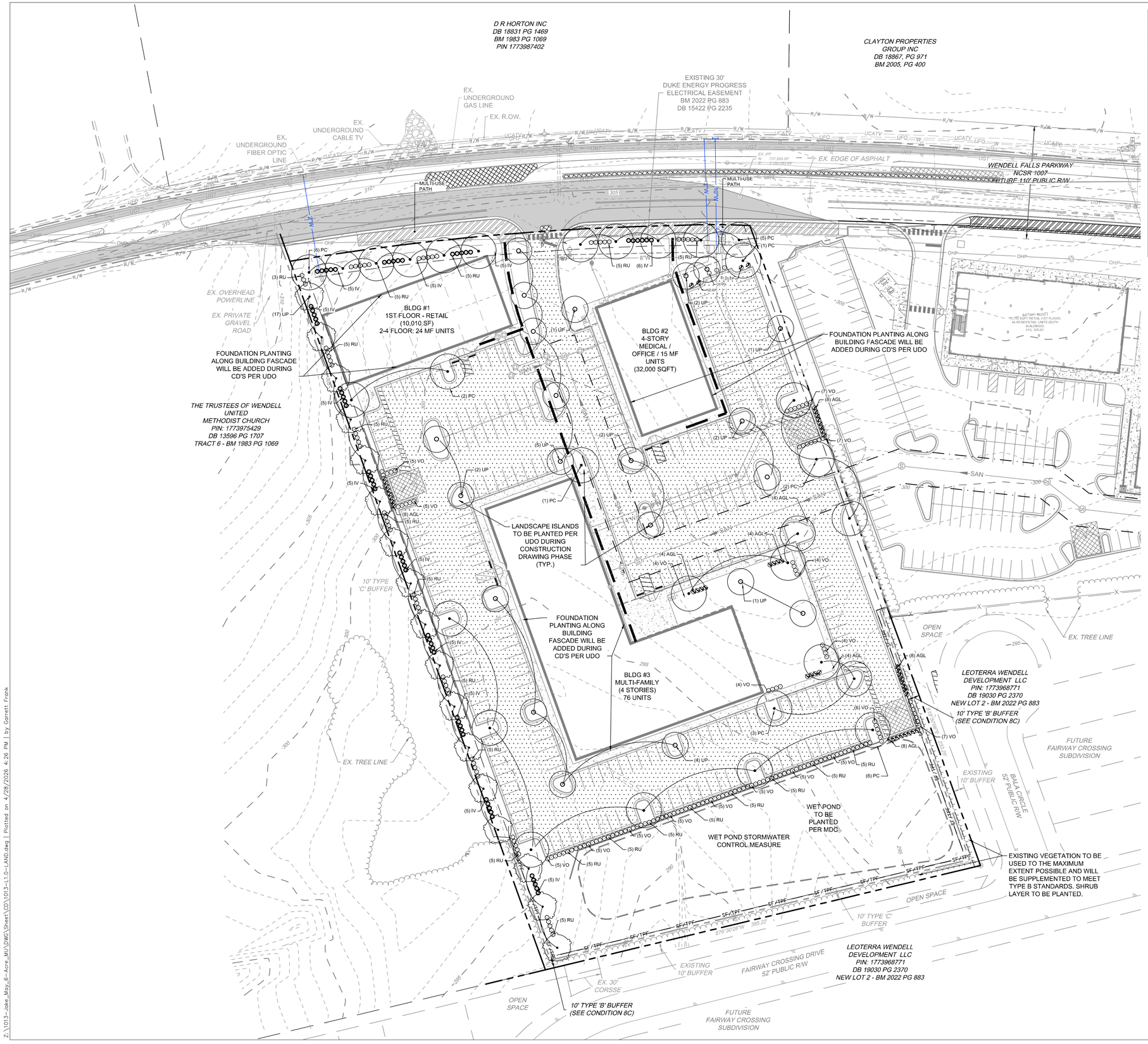

PLANT KEY

DECIDUOUS CANOPY TREES	CODE	BOTANICAL / COMMON NAME
	PC	PISTACIA CHINENSIS / CHINESE PISTACHE
	UP	ULMUS PARVIFOLIA / LACEBARK ELM
	QB	QUERCUS BICOLOR/ SWAMP WHITE OAK
SHRUBS	**CODE**	**BOTANICAL / COMMON NAME**
	AGL	ABELIA X GRANDIFLORA 'LITTLE RICHARD' LITTLE RICHARD GLOSSY ABELIA
	IV	ILEX VOMITORIA/ YAUPON HOLLY
	RU	RHAPHIOLEPSIS UMBELLATA 'ELEANOR TABER' ELEANOR TABER INDIAN HAWTHORN
	VO	VIBURNUM OBOVATUM 'MRS. SCHILLER'S DELIGHT' / WALTER'S VIBURNUM

FRANK LAND DESIGN, PC
UNIQUE SOLUTIONS: YOUR VISION, OUR EXPERTISE
120 MOSAIC BLVD; SUITE 200-47, PITTSBORO, NC 27312 | LICENSE #C-55144 | WWW.FRANKLANDDESIGN.COM

PRELIMINARY

NORTH CAROLINA PROFESSIONAL SEAL 055780 ENGINEER GARRETT W. FRANK

NOT FOR CONSTRUCTION

LANDSCAPE ARCHITECTURE | CIVIL ENGINEERING

REVISIONS:	
11.13.25	1ST ROUND MP COMMENT REVISIONS
01.28.26	2ND ROUND MP COMMENT REVISIONS
03.06.26	3RD ROUND MP COMMENT REVISIONS
03.27.26	4TH ROUND MP COMMENT REVISIONS

CHECKED BY:	DATE:
G.FRANK	04.30.2025
DESIGN / DRAWN BY:	SCALE:
JLA	SEE PLANS

JAKE MAY MIXED-USE PHASE #2

WAKE COUNTY, NC

0 WENDELL FALLS PARKWAY, WENDELL, NC 27591

LANDSCAPE PLAN

ISSUED FOR:	MASTER PLAN
JOB NO.	1013
SHEET NO.	L1.0

These plans and associated documents are the exclusive property of FRANK LAND DESIGN, PC and may not be reproduced in whole or in part and shall not be used for any purpose whatsoever, inclusive, but not limited to construction, bidding, and/or construction staking without the express written consent of FRANK LAND DESIGN, PC.

Z:\1013-Jake_May_6-Acre_MU\DWG\Sheet\CD\1013-L1.0-LAND.dwg | Plotted on 4/28/2026 4:26 PM | by Garrett Frank

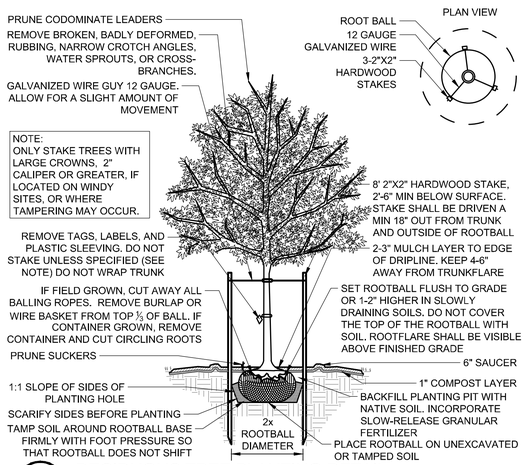

1 DECIDUOUS TREE PLANTING DETAIL

NTS

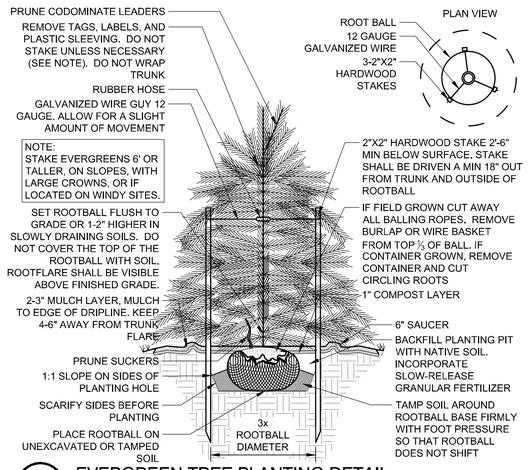

2 EVERGREEN TREE PLANTING DETAIL

NTS

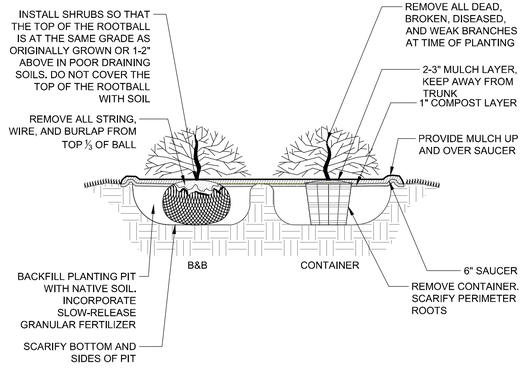

3 SHRUB PLANTING DETAIL

NTS

GENERAL NOTES

PRE-CONSTRUCTION

- CONTRACTOR IS RESPONSIBLE FOR CONTACTING NORTH CAROLINA 811 AT 1.800.553.3120 FOR LOCATION OF ALL UTILITY LINES.TREES SHALL BE LOCATED A MINIMUM OF 5 FEET FROM SEWER/WATER CONNECTIONS, NOTIFY LANDSCAPE ARCHITECT OF CONFLICTS.
- VERIFY ALL PLANT MATERIAL QUANTITIES ON THE PLAN PRIOR TO BIDDING, PLANT LIST TOTALS ARE FOR CONVENIENCE ONLY AND SHALL BE VERIFIED PRIOR TO BIDDING.
- PROVIDE PLANT MATERIALS OF QUANTITY, SIZE, GENUS, SPECIES, AND VARIETY INDICATED ON PLANS. ALL PLANT MATERIALS AND INSTALLATION SHALL COMPLY WITH RECOMMENDATIONS AND REQUIREMENTS OF ANSI Z60.1 "AMERICAN STANDARD FOR NURSERY STOCK". IF SPECIFIED PLANT MATERIAL IS NOT OBTAINABLE, SUBMIT PROOF OF NON AVAILABILITY TO THE LANDSCAPE ARCHITECT, TOGETHER WITH PROPOSAL FOR USE OF EQUIVALENT MATERIAL.
- PROVIDE AND INSTALL ALL PLANTS AS IN ACCORDANCE WITH DETAILS AND CONTRACT SPECIFICATIONS.
- SOIL TESTS SHALL BE PERFORMED TO DETERMINE SOIL CHARACTER AND QUALITY. NECESSARY SOIL AMENDMENTS SHALL BE PERFORMED PER TEST RESULTS TO ENSURE PLANT HEALTH..

CONSTRUCTION/INSTALLATION

- LANDSCAPE ARCHITECT RESERVES THE RIGHT TO REJECT ANY PLANTS AND MATERIALS THAT ARE IN AN UNHEALTHY OR UNSIGHTLY CONDITION, AS WELL AS PLANTS AND MATERIALS THAT DO NOT CONFORM TO ANSI Z60.1 "AMERICAN STANDARD FOR NURSERY STOCK"
- LABEL AT LEAST ONE TREE AND ONE SHRUB OF EACH VARIETY AND CALIPER WITH A SECURELY ATTACHED, WATERPROOF TAG BEARING THE DESIGNATION OF BOTANICAL AND COMMON NAME.
- INSTALL LANDSCAPE PLANTINGS AT ENTRANCES/EXITS AND PARKING AREAS ACCORDING TO PLANS SO THAT MATERIALS WILL NOT INTERFERE WITH SIGHT DISTANCES.
- CONTRACTOR IS RESPONSIBLE FOR WATERING ALL PLANT MATERIAL DURING INSTALLATION AND UNTIL FINAL INSPECTION AND ACCEPTANCE BY OWNER. CONTRACTOR SHALL NOTIFY OWNER OF CONDITIONS WHICH AFFECTS THE GUARANTEE.
- **NO MULCH SHALL BE WITHIN 6" OF THE ROOT BASE OR TRUNK.**

INSPECTIONS/GUARANTEE

- UPON COMPLETION OF LANDSCAPE INSTALLATION, THE LANDSCAPE CONTRACTOR SHALL NOTIFY THE GENERAL CONTRACTOR WHO WILL VERIFY COMPLETENESS, INCLUDING THE REPLACEMENT OF ALL DEAD PLANT MATERIAL. CONTRACTOR IS RESPONSIBLE FOR SCHEDULING A FINAL INSPECTION BY THE LANDSCAPE ARCHITECT.
- ALL EXTERIOR PLANT MATERIALS SHALL BE GUARANTEED FOR ONE FULL YEAR AFTER DATE OF FINAL INSPECTION AGAINST DEFECTS INCLUDING DEATH AND UNSATISFACTORY GROWTH, DEFECTS RESULTING FROM NEGLECT BY THE OWNER, ABUSE OR DAMAGE BY OTHERS, OR UNUSUAL PHENOMENA OR INCIDENTS WHICH ARE BEYOND THE CONTRACTORS CONTROL ARE NOT THE RESPONSIBILITY OF THE CONTRACTOR.
- PLANT MATERIAL QUANTITIES AND SIZES WILL BE INSPECTED FOR COMPLIANCE WITH APPROVED PLANS BY A SITE PLAN REVIEW AGENT OF THE PLANNING DEPARTMENT PRIOR TO THE RELEASE OF THE CERTIFICATE OF OCCUPANCY.
- REMOVE ALL GUY WIRES AND STAKES 12 MONTHS AFTER INSTALLATION.

LANDSCAPE CALCULATIONS

PERIMETER LANDSCAPE BUFFERS

10' TYPE 'C' LANDSCAPE BUFFER (WEST)
658 LF
REQUIREMENTS :
1 CANOPY TREE EVERY 40 FEET
1 SHRUB EVERY 8 FEET

CANOPY TREES
REQUIRED: 17
PROVIDED: 17
SHRUBS
REQUIRED: 83
PROVIDED: 83

10' TYPE 'B' LANDSCAPE BUFFER (SOUTH)
92 LF
REQUIREMENTS:
1 CANOPY TREE EVERY 25 FEET
1 SHRUB EVERY 6 FEET

CANOPY TREES
REQUIRED: 4
SHRUBS
REQUIRED: 16

(REQUIREMENTS TO BE MET BY EXISTING VEGETATION)

20' TYPE 'B' LANDSCAPE BUFFER (SOUTH)
336 LF
REQUIREMENTS:
1 CANOPY TREE EVERY 25 FEET
1 SHRUB EVERY 6 FEET

CANOPY TREES
REQUIRED: 14
SHRUBS
REQUIRED: 14

(EXISTING TREES TO BE USED TO THE MAXIMUM EXTENT POSSIBLE BUT WILL BE SUPPLEMENTED AS NEEDED TO MEET BUFFER REQUIREMENTS. SHRUB LAYER MUST BE PLANTED.)

10' TYPE 'B' LANDSCAPE BUFFER (EAST)
222 LF
REQUIREMENTS:
1 CANOPY TREE EVERY 25 FEET
1 SHRUB EVERY 6 FEET

CANOPY TREES
REQUIRED: 9
SHRUBS
REQUIRED: 37

(REQUIREMENTS TO BE MET BY EXISTING VEGETATION)

GATEWAY OVERLAY STREET YARD

383-FT - 25-FT (DRIVEWAY) = 358-FT

358-FT/ 100 - 3.58 X 3 CANOPY = 11 CANOPY REQUIRED
358-FT/ 100 - 3.58 X 12 SHRUBS = 43 SHRUBS REQUIRED

11 CANOPY PROVIDED
43 SHRUBS PROVIDED

PARKING AREA PLANTING
1 CANOPY TREE EVERY 12 PARKING SPACES
4 SHRUBS EVERY 12 PARKING SPACES

256 PARKING SPACES/ 12 = 21.3 = 22 CANOPY TREES
256 PARKING SPACES (4 SHRUBS/ 12 SPACES) = 85.33 = 86 SHRUBS

40 CANOPY PROVIDED
98 SHRUBS PROVIDED

FOUNDATION PLANTING
1 SHRUB SHALL BE PLANTED PER 5' OF BUILDING FACADE

PLANT SCHEDULE

TREES	CODE	QTY	BOTANICAL / COMMON NAME	CONTAINER	CALIPER	HEIGHT	NOTES
	PC	30	PISTACIA CHINENSIS / CHINESE PISTACHE	B&B	2 IN	8' MIN.	
	UP	17	ULMUS PARVIFOLIA / LACEBARK ELM	B&B	2 IN	8' MIN.	
	UP	21	ULMUS PARVIFOLIA / LACEBARK ELM	B&B	2 IN	8' MIN.	
SHRUBS	CODE	QTY	BOTANICAL / COMMON NAME	CONTAINER	-	HEIGHT	NOTES
	AGL	48	ABELIA X GRANDIFLORA 'LITTLE RICHARD' LITTLE RICHARD GLOSSY ABELIA	5 GAL.		3'-0"	
	IV	93	ILEX VOMITORIA 'YAUPON HOLLY	5 GAL.		3'-0"	
	RU	103	RHAPHIOLEPSIS UMBELLATA 'ELEANOR TABER' ELEANOR TABER INDIAN HAWTHORN	5 GAL.		3'-0"	
	VO	92	VIBURNUM OBOVATUM 'MRS. SCHILLER'S DELIGHT' / WALTER'S VIBURNUM	5 GAL.		3'-0"	

1. STREET TREE SHALL BE USED TO SATISFY CANOPY TREE REQUIREMENT FOR VUA VISIBLE FROM ROW PER UDO 9.8.2A.2.b(3)
2. ALL PLANTINGS WITHIN THE SIGHT DISTANCE TRIANGLES MUST BE 30 INCHES OR LESS IN HEIGHT OR MUST BE LIMBED UP TO PROVIDE 8 FT FROM THE LOWEST LIMBS TO THE CURB LINE ELEVATION OR THE NEAREST TRAVEL WAY IF NO CURBING EXISTING.
3. REQUIRED TREE COVERAGE: 10% OF DISTURBED AREA = 5,469 SF
PROVIDED TREE COVERAGE: 5,469 SF

FRANK LAND DESIGN, PC
UNIQUE SOLUTIONS: YOUR VISION, OUR EXPERTISE
120 MOSAIC BLVD; SUITE 200-47, PITTSBORO, NC 27312 | LICENSE #C-5114 | WWW.FRANKLANDDESIGN.COM

PRELIMINARY

NORTH CAROLINA PROFESSIONAL SEAL 055780 LANDSCAPE ARCHITECT GARRETT W. FRANK

NOT FOR CONSTRUCTION

LANDSCAPE ARCHITECTURE | CIVIL ENGINEERING

REVISIONS:	
11.13.25	1ST ROUND MP COMMENT REVISIONS
01.28.26	2ND ROUND MP COMMENT REVISIONS
03.06.26	3RD ROUND MP COMMENT REVISIONS
03.27.26	4TH ROUND MP COMMENT REVISIONS

CHECKED BY: G.FRANK	DATE: 04.30.2025
DESIGN / DRAWN BY: JLA	SCALE: SEE PLANS

JAKE MAY MIXED-USE PHASE #2

WAKE COUNTY, NC

0 WENDELL FALLS PARKWAY, WENDELL, NC 27591

LANDSCAPE DETAILS

ISSUED FOR:	MASTER PLAN
JOB NO.	1013
SHEET NO.	L1.1

These plans and associated documents are the exclusive property of FRANK LAND DESIGN, PC, and may not be reproduced in whole or in part and shall not be used for any purpose whatsoever, inclusive, but not limited to construction, bidding, and/or construction staking without the express written consent of FRANK LAND DESIGN, PC.

Z:\1013-Jake_May_6-Acre_MU\DWG\Sheet\CD\1013-L11-NTDT.dwg | Plotted on 4/28/2026 4:26 PM | by Garrett Frank



2 A201 **Exterior Elevation** — East

SCALE: 1/8"=1'-0"



1 A201 **Exterior Elevation** — South

SCALE: 1/8"=1'-0"

MATERIAL LEGEND

BRICK 1
RED

BRICK 2
TAN

STONE 1
TAN

STUCCO 1
CREAM

COMPOSITE PANEL 1
TAN

COMPOSITE PANEL 1
GREEN

MULLIONS AND METAL
BLACK ANODIZED ALUMINUM

new city design group
1304 HILLSBOROUGH ST.
RALEIGH, NC 27605
919.831.1308
FAX 919.831.9737

4 APRIL, 2025

NOT FOR CONSTRUCTION

–	☐	PROGRESS PRINT
–	☐	HEALTH DEPT. PLAN CHECK
4/4/25	■	BUILDING DEPT. PLAN CHECK
–	☐	BID SET
–	☐	CONSTRUCTION SET
–	☐	SUBMITTAL DOCUMENT

THE DRAWINGS, SPECIFICATIONS AND OTHER DOCUMENTS PREPARED BY THE ARCHITECT FOR THIS PROJECT ARE INSTRUMENTS OF THE ARCHITECT'S SERVICE FOR USE SOLELY WITH RESPECT TO THIS PROJECT AND UNLESS OTHERWISE PROVIDED, THE ARCHITECT SHALL BE DEEMED THE AUTHOR OF THESE DOCUMENTS AND SHALL RETAIN ALL COMMON LAW, STATUTORY AND OTHER RESERVED RIGHTS, INCLUDING COPYRIGHT. THE ARCHITECT'S DRAWINGS, SPECIFICATIONS OR OTHER DOCUMENTS SHALL NOT BE USED BY THE OWNER OR OTHERS ON OTHER PROJECTS, FOR ADDITIONS TO THIS PROJECT BY OTHERS EXCEPT BY AGREEMENT IN WRITING BY THE ARCHITECT.

Jake May Mixed Use
Phase II
Wendell Falls Parkway
Wendell, NC 27591

PROGRESS SET

DESIGNER :	–
DRAWN :	–
CHECKED :	–
SCALE :	AS SHOWN
JOB NUMBER :	

SHEET TITLE
Building A
Exterior Elevations

SHEET NUMBER
A201



NOTE: NOT PEDESTRIAN OR STREET FACING FACADE

2 / A202 **Exterior Elevation** — West

SCALE: 1/8"=1'-0"



1 / A202 **Exterior Elevation** — North

SCALE: 1/8"=1'-0"

MATERIAL LEGEND

- BRICK 1 — RED
- BRICK 2 — TAN
- STONE 1 — TAN
- STUCCO 1 — CREAM
- COMPOSITE PANEL 1 — TAN
- COMPOSITE PANEL 1 — GREEN
- MULLIONS AND METAL — BLACK ANODIZED ALUMINUM

new city design group
1304 HILLSBOROUGH ST.
RALEIGH, NC 27605
919.831.1308
FAX 919.831.9737

4 APRIL, 2025

NOT FOR CONSTRUCTION

–	☐	PROGRESS PRINT
–	☐	HEALTH DEPT. PLAN CHECK
4/4/25	■	BUILDING DEPT. PLAN CHECK
–	☐	BID SET
–	☐	CONSTRUCTION SET
–	☐	SUBMITTAL DOCUMENT

THE DRAWINGS, SPECIFICATIONS AND OTHER DOCUMENTS PREPARED BY THE ARCHITECT FOR THIS PROJECT ARE INSTRUMENTS OF THE ARCHITECT'S SERVICE FOR USE SOLELY WITH RESPECT TO THIS PROJECT AND UNLESS OTHERWISE PROVIDED, THE ARCHITECT SHALL BE DEEMED THE AUTHOR OF THESE DOCUMENTS AND SHALL RETAIN ALL COMMON LAW, STATUTORY AND OTHER RESERVED RIGHTS, INCLUDING COPYRIGHT. THE ARCHITECT'S DRAWINGS, SPECIFICATIONS OR OTHER DOCUMENTS SHALL NOT BE USED BY THE OWNER OR OTHERS ON OTHER PROJECTS, FOR ADDITIONS TO THIS PROJECT BY OTHERS EXCEPT BY AGREEMENT IN WRITING BY THE ARCHITECT.

Jake May Mixed Use
Phase II

Wendell Falls Parkway
Wendell, NC 27591

PROGRESS SET

DESIGNER :	–
DRAWN :	–
CHECKED :	–
SCALE :	AS SHOWN
JOB NUMBER :	

SHEET TITLE
Building A
Exterior Elevations

SHEET NUMBER
A202



2 A203 **Exterior Elevation** — North

SCALE: 3/32"=1'-0"



1 A203 **Exterior Elevation** — West

SCALE: 3/32"=1'-0"

MATERIAL LEGEND

BRICK 1
RED

BRICK 2
TAN

STUCCO 1
CREAM

COMPOSITE PANEL 1
TAN

COMPOSITE PANEL 2
GREEN

MULLIONS AND METAL
BLACK ANODIZED ALUMINUM

DESIGN DETAILS INCLUDED:

C: RECESSED ENTRY
H: OFF-SETS IN ROOF
I: WINDOW TRIM
K: BALCONIES

new city design group
1304 HILLSBOROUGH ST.
RALEIGH, NC 27605
919.831.1308
FAX 919.831.9737

4 APRIL, 2025

NOT FOR CONSTRUCTION

–	☐	PROGRESS PRINT
–	☐	HEALTH DEPT. PLAN CHECK
4/4/25	■	BUILDING DEPT. PLAN CHECK
–	☐	BID SET
–	☐	CONSTRUCTION SET
–	☐	SUBMITTAL DOCUMENT

THE DRAWINGS, SPECIFICATIONS AND OTHER DOCUMENTS PREPARED BY THE ARCHITECT FOR THIS PROJECT ARE INSTRUMENTS OF THE ARCHITECT'S SERVICE FOR USE SOLELY WITH RESPECT TO THIS PROJECT AND UNLESS OTHERWISE PROVIDED, THE ARCHITECT SHALL BE DEEMED THE AUTHOR OF THESE DOCUMENTS AND SHALL RETAIN ALL COMMON LAW, STATUTORY AND OTHER RESERVED RIGHTS, INCLUDING COPYRIGHT. THE ARCHITECT'S DRAWINGS, SPECIFICATIONS OR OTHER DOCUMENTS SHALL NOT BE USED BY THE OWNER OR OTHERS ON OTHER PROJECTS, FOR ADDITIONS TO THIS PROJECT BY OTHERS EXCEPT BY AGREEMENT IN WRITING BY THE ARCHITECT.

Jake May Mixed Use
Phase II
Wendell Falls Parkway
Wendell, NC 27591

PROGRESS SET

DESIGNER :	–
DRAWN :	–
CHECKED :	–
SCALE :	AS SHOWN
JOB NUMBER :	

SHEET TITLE
Building B
Exterior Elevations

SHEET NUMBER
A203



2 A204 **Exterior Elevation** — South

SCALE: 3/32"=1'-0"



1 A204 **Exterior Elevation** — East

SCALE: 3/32"=1'-0"

MATERIAL LEGEND

- BRICK 1 — RED
- BRICK 2 — TAN
- STUCCO 1 — CREAM
- COMPOSITE PANEL 1 — TAN
- COMPOSITE PANEL 2 — GREEN
- MULLIONS AND METAL — BLACK ANODIZED ALUMINUM

DESIGN DETAILS INCLUDED:

C: RECESSED ENTRY
H: OFF-SETS IN ROOF
I: WINDOW TRIM
K: BALCONIES

new city design group
1304 HILLSBOROUGH ST.
RALEIGH, NC 27605
919.831.1308
FAX 919.831.9737

4 APRIL, 2025

NOT FOR CONSTRUCTION

–	☐	PROGRESS PRINT
–	☐	HEALTH DEPT. PLAN CHECK
4/4/25	■	BUILDING DEPT. PLAN CHECK
–	☐	BID SET
–	☐	CONSTRUCTION SET
–	☐	SUBMITTAL DOCUMENT

THE DRAWINGS, SPECIFICATIONS AND OTHER DOCUMENTS PREPARED BY THE ARCHITECT FOR THIS PROJECT ARE INSTRUMENTS OF THE ARCHITECT'S SERVICE FOR USE SOLELY WITH RESPECT TO THIS PROJECT AND UNLESS OTHERWISE PROVIDED, THE ARCHITECT SHALL BE DEEMED THE AUTHOR OF THESE DOCUMENTS AND SHALL RETAIN ALL COMMON LAW, STATUTORY AND OTHER RESERVED RIGHTS, INCLUDING COPYRIGHT. THE ARCHITECT'S DRAWINGS, SPECIFICATIONS OR OTHER DOCUMENTS SHALL NOT BE USED BY THE OWNER OR OTHERS ON OTHER PROJECTS, FOR ADDITIONS TO THIS PROJECT BY OTHERS EXCEPT BY AGREEMENT IN WRITING BY THE ARCHITECT.

Jake May Mixed Use
Phase II

Wendell Falls Parkway
Wendell, NC 27591

PROGRESS SET

DESIGNER : –
DRAWN : –
CHECKED : –
SCALE : AS SHOWN
JOB NUMBER :

SHEET TITLE
Building B
Exterior Elevations

SHEET NUMBER
A204



2 / A205 **Exterior Elevation** — North

SCALE: 1/8"=1'-0"



1 / A205 **Exterior Elevation** — West

SCALE: 1/8"=1'-0"

MATERIAL LEGEND

- BRICK 1 — RED
- BRICK 2 — TAN
- STONE 1 — TAN
- STUCCO 1 — CREAM
- COMPOSITE PANEL 1 — TAN
- COMPOSITE PANEL 1 — GREEN
- MULLIONS AND METAL — BLACK ANODIZED ALUMINUM

new city design group
1304 HILLSBOROUGH ST.
RALEIGH, NC 27605
919.831.1308
FAX 919.831.9737

4 APRIL, 2025

NOT FOR CONSTRUCTION

–	☐	PROGRESS PRINT
–	☐	HEALTH DEPT. PLAN CHECK
4/4/25	■	BUILDING DEPT. PLAN CHECK
–	☐	BID SET
–	☐	CONSTRUCTION SET
–	☐	SUBMITTAL DOCUMENT

THE DRAWINGS, SPECIFICATIONS AND OTHER DOCUMENTS PREPARED BY THE ARCHITECT FOR THIS PROJECT ARE INSTRUMENTS OF THE ARCHITECT'S SERVICE FOR USE SOLELY WITH RESPECT TO THIS PROJECT AND UNLESS OTHERWISE PROVIDED, THE ARCHITECT SHALL BE DEEMED THE AUTHOR OF THESE DOCUMENTS AND SHALL RETAIN ALL COMMON LAW, STATUTORY AND OTHER RESERVED RIGHTS, INCLUDING COPYRIGHT. THE ARCHITECTS DRAWINGS, SPECIFICATIONS OR OTHER DOCUMENTS SHALL NOT BE USED BY THE OWNER OR OTHERS ON OTHER PROJECTS, FOR ADDITIONS TO THIS PROJECT BY OTHERS EXCEPT BY AGREEMENT IN WRITING BY THE ARCHITECT.

Jake May Mixed Use
Phase II

Wendell Falls Parkway
Wendell, NC 27591

PROGRESS SET

DESIGNER :	–
DRAWN :	–
CHECKED :	–
SCALE :	AS SHOWN
JOB NUMBER :	

SHEET TITLE
Building C
Exterior Elevations

SHEET NUMBER
A205



2 / A206 **Exterior Elevation** — South

SCALE: 1/8"=1'-0"



1 / A206 **Exterior Elevation** — East

SCALE: 1/8"=1'-0"

MATERIAL LEGEND

- BRICK 1 — RED
- BRICK 2 — TAN
- STONE 1 — TAN
- STUCCO 1 — CREAM
- COMPOSITE PANEL 1 — TAN
- COMPOSITE PANEL 1 — GREEN
- MULLIONS AND METAL — BLACK ANODIZED ALUMINUM

new city design group
1304 HILLSBOROUGH ST.
RALEIGH, NC 27605
919.831.1308
FAX 919.831.9737

4 APRIL, 2025

NOT FOR CONSTRUCTION

–	☐	PROGRESS PRINT
–	☐	HEALTH DEPT. PLAN CHECK
4/4/25	■	BUILDING DEPT. PLAN CHECK
–	☐	BID SET
–	☐	CONSTRUCTION SET
–	☐	SUBMITTAL DOCUMENT

THE DRAWINGS, SPECIFICATIONS AND OTHER DOCUMENTS PREPARED BY THE ARCHITECT FOR THIS PROJECT ARE INSTRUMENTS OF THE ARCHITECT'S SERVICE FOR USE SOLELY WITH RESPECT TO THIS PROJECT AND UNLESS OTHERWISE PROVIDED, THE ARCHITECT SHALL BE DEEMED THE AUTHOR OF THESE DOCUMENTS AND SHALL RETAIN ALL COMMON LAW, STATUTORY AND OTHER RESERVED RIGHTS, INCLUDING COPYRIGHT. THE ARCHITECT'S DRAWINGS, SPECIFICATIONS OR OTHER DOCUMENTS SHALL NOT BE USED BY THE OWNER OR OTHERS ON OTHER PROJECTS, FOR ADDITIONS TO THIS PROJECT BY OTHERS EXCEPT BY AGREEMENT IN WRITING BY THE ARCHITECT.

Jake May Mixed Use
Phase II

Wendell Falls Parkway
Wendell, NC 27591

PROGRESS SET

DESIGNER :	–
DRAWN :	–
CHECKED :	–
SCALE :	AS SHOWN
JOB NUMBER :	

SHEET TITLE
Building C
Exterior Elevations

SHEET NUMBER
A206

Jake May Mixed Use

January 29, 2026 Virtual Neighborhood Meeting Minutes

The Applicant held a virtual neighborhood meeting for the Jake May Mixed Use Phase 2 conditional rezoning from 7-8pm on January 29, 2026. The following members of the project team were in attendance to present and answer questions: Garrett Frank from Frank Land Design, Jeff Hochanadel and Nueshan Pradhan from the Timmons Group, and Ashley Terrazas from Parker Poe. No neighbors joined the meeting during the hour that the project team members were in attendance.

STATE OF NORTH CAROLINA
DEPARTMENT OF TRANSPORTATION

JOSH STEIN
GOVERNOR

DANIEL H. JOHNSON
SECRETARY

February 20, 2026

Wendell Development

Traffic Impact Analysis Review Report

Congestion Management Section

TIA Project:	SC-2023-016-R1
Division:	5
County:	Wake
Location:	Southwest Wendell Falls Parkway and Jake May Drive

NORTH CAROLINA PROFESSIONAL SEAL 058129 ENGINEER RITA MARIA GHANTOUS

Rita M. Ghantous

02/20/2026

Clarence B Bunting, P.E. Regional Engineer
Rita M. Ghantous, PhD, P.E., Project Design Engin

Mailing Address:
NC DEPARTMENT OF TRANSPORTATION
TRANSPORTATION MOBILITY & SAFETY DIVISION
TRAFFIC MANAGEMENT UNIT
1561 MAIL SERVICE CENTER
RALEIGH, NC 27699-1561

Telephone: (919) 814-5000
Fax: (919) 771-2745
Customer Service: 1-877-368-4968

Website: www.ncdot.gov

Location:
750 N. GREENFIELD PARKWAY
GARNER, NC 27529

Wendell Development		
SC-2023-016-R1	Wendell	Wake County

Per your request, the Congestion Management Section (CMS) of the Transportation Mobility and Safety Division has completed a review of the subject site. The comments and recommendations contained in this review are based on data for background conditions presented in the Traffic Impact Analysis (TIA) and are subject to the approval of the local District Engineer's Office and appropriate local authorities.

Date Initially Received by CMS	01/21/26	Date of Site Plan	04/30/25
Date of Complete Information	01/21/26	Date of Sealed TIA	01/20/26

Proposed Development

The TIA assumes the development is completed by 2027 and consists of the following:

Land Use	Land Use Code	Size
Phase 1		
Multifamily Housing (Low-Rise)	220	36 d.u.
High-Turnover (Sit-Down) Restaurant	932	2,800 sq.ft.
Strip Retail Plaza (<40k)	822	30,400 sq.ft.
Phase 2		
Multifamily Housing (Low-Rise)	220	135 d.u.
Strip Retail Plaza (<40k)	822	10,010 sq.ft.
Medical-Dental Office Building - Stand Alone	720	16,800 sq.ft.

Trip Generation - Unadjusted Volumes During a Typical Weekday			
	IN	**OUT**	**TOTAL**
AM Peak Hour	113	117	230
PM Peak Hour	194	182	376
Daily Trips			4,326

General Reference

For reference to various documents applicable to this review please reference the following link: ***https://connect.ncdot.gov/resources/safety/Pages/Congestion-Management.aspx***

Once the driveway permit has been approved and issued, a copy of the final driveway permit requirements should be forwarded to this office. If we can provide further assistance, please contact the Congestion Management Section.

Signalization

We defer to the District Engineer, the Division Traffic Engineer, and the Regional Traffic Engineer for final decisions regarding signalization.

Improvements By Others

The analysis includes background improvements by others. If these improvements are not in place at the time of construction, the site developer should provide these improvements or analysis demonstrating mitigation is not necessary.

Configuration for site access 3: Right-in/right-out

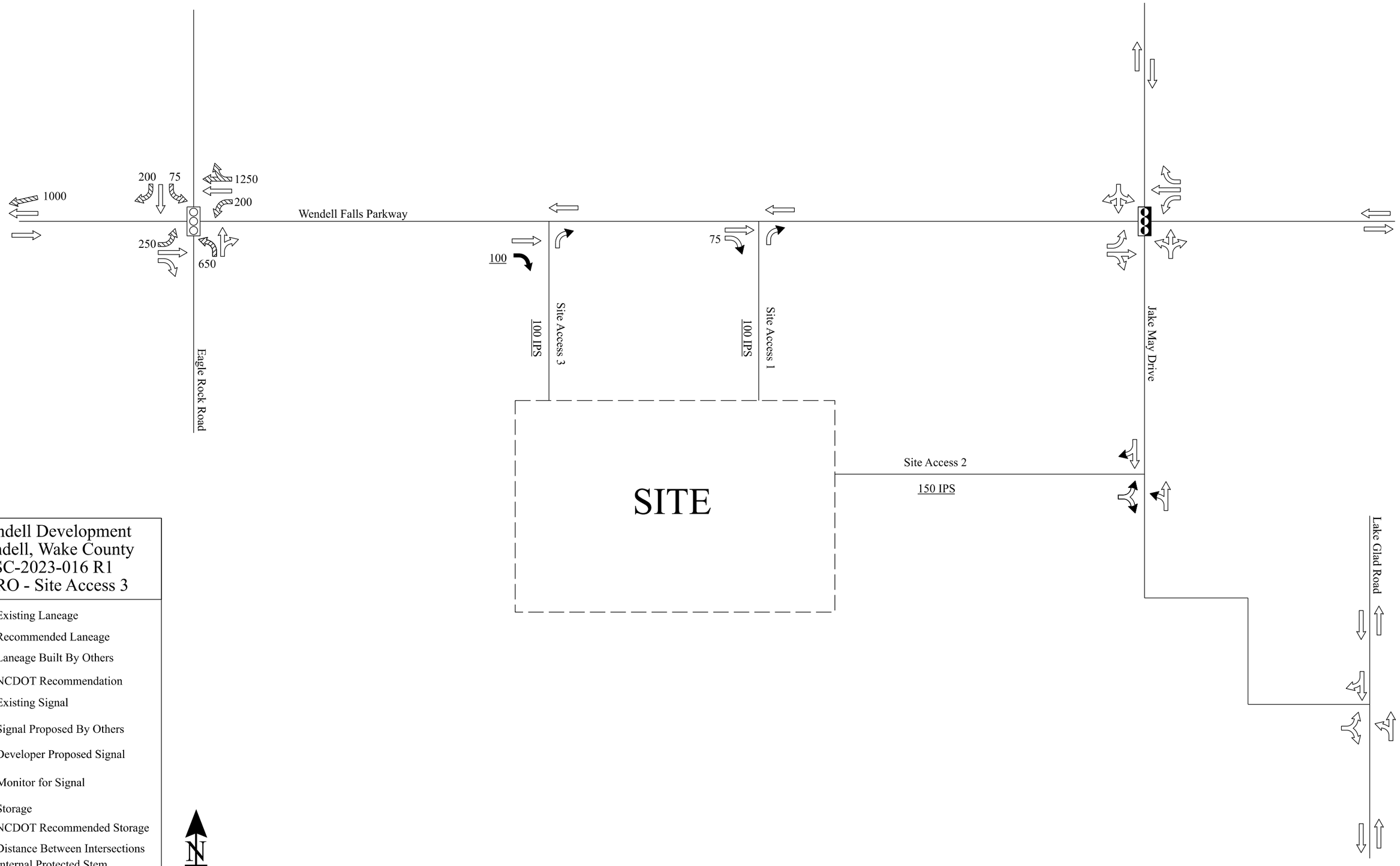

Wendell Development
Wendell, Wake County
SC-2023-016 R1
RIRO - Site Access 3

- Existing Laneage
- Recommended Laneage
- Laneage Built By Others
- NCDOT Recommendation
- Existing Signal
- Signal Proposed By Others
- Developer Proposed Signal
- Monitor for Signal
- XXX Storage
- XXX NCDOT Recommended Storage
- <XXX> Distance Between Intersections
- IPS Internal Protected Stem
- All Distances in Feet
- Drawing Not to Scale

Configuration for site access 3: Directional Cross Over

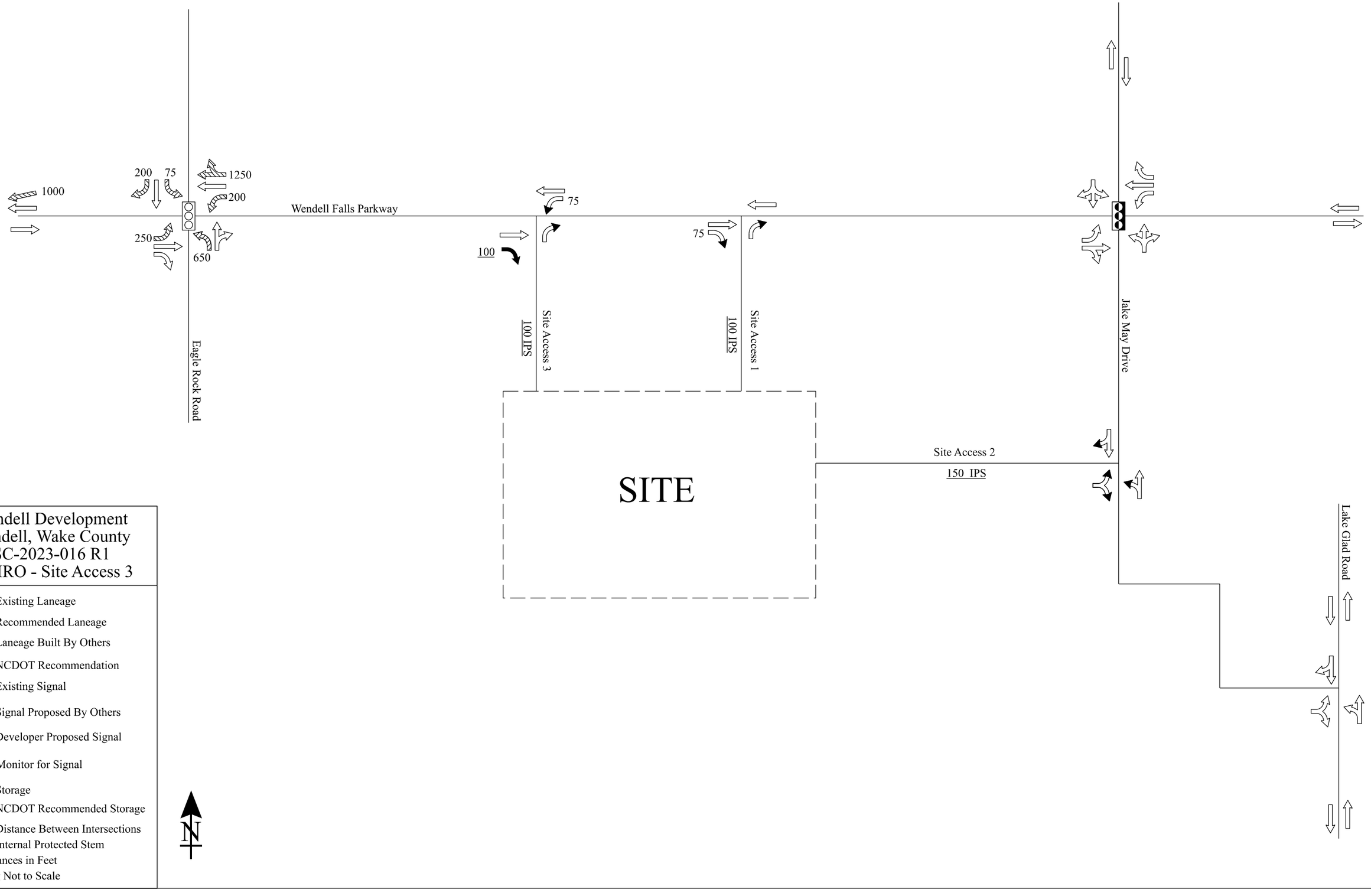

Wendell Development
Wendell, Wake County
SC-2023-016 R1
LIRIRO - Site Access 3

- Existing Laneage
- Recommended Laneage
- Laneage Built By Others
- NCDOT Recommendation
- Existing Signal
- Signal Proposed By Others
- Developer Proposed Signal
- Monitor for Signal
- XXX Storage
- XXX NCDOT Recommended Storage
- <XXX> Distance Between Intersections
- IPS Internal Protected Stem
- All Distances in Feet
- Drawing Not to Scale

Configuration for site access 3: Full movement

District Note: Site Access 3 does not appear to meet median break spacing for a full access. - DTB

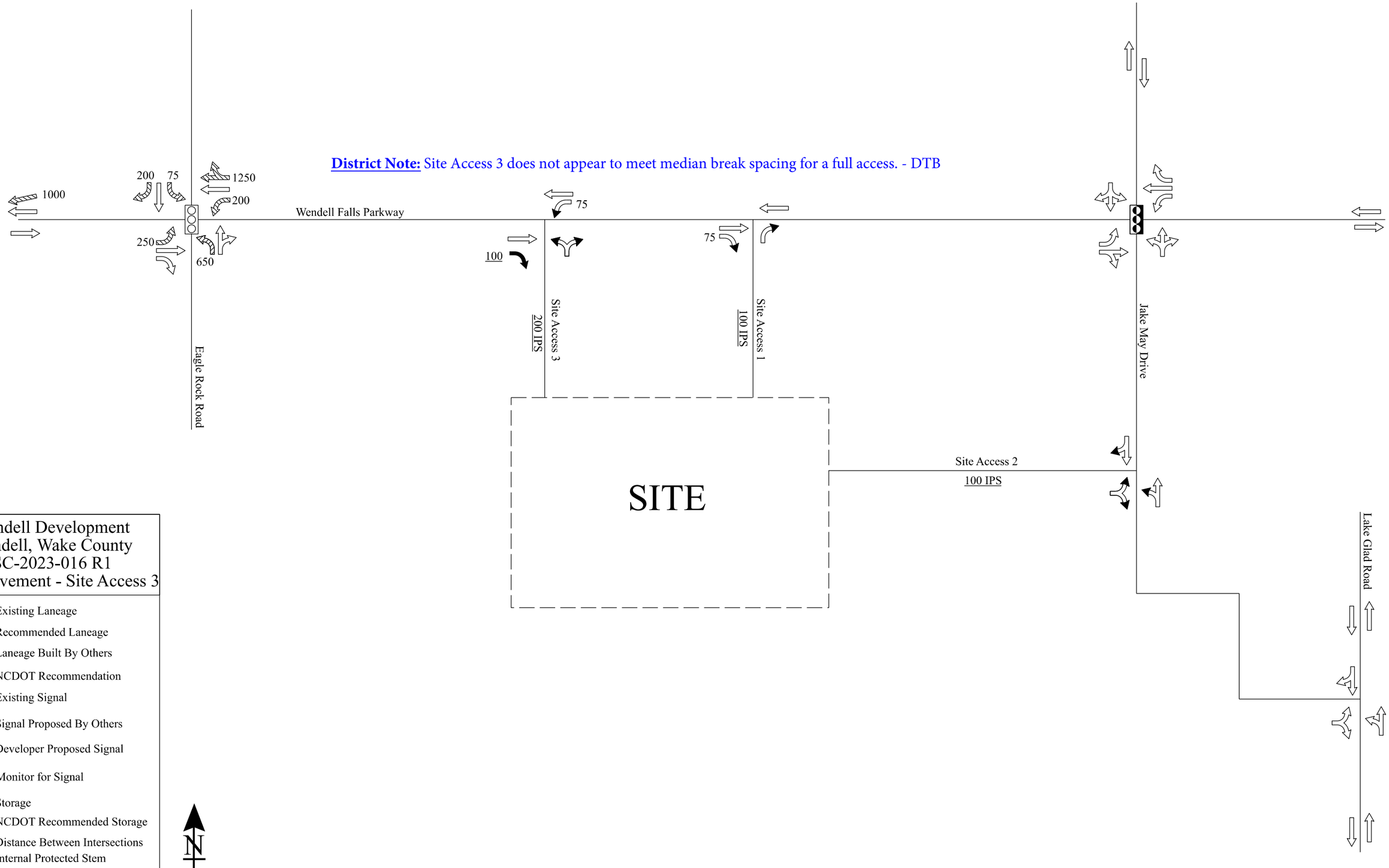

Wendell Development
Wendell, Wake County
SC-2023-016 R1
Full movement - Site Access 3

- Existing Laneage
- Recommended Laneage
- Laneage Built By Others
- NCDOT Recommendation
- Existing Signal
- Signal Proposed By Others
- Developer Proposed Signal
- Monitor for Signal
- XXX Storage
- XXX NCDOT Recommended Storage
- <XXX> Distance Between Intersections
- IPS Internal Protected Stem
- All Distances in Feet
- Drawing Not to Scale