AGENDA

Village Board
Tuesday, April 14, 2026
7:00 PM
Temporary Village Hall
1000 E. Woodfield Rd.
Schaumburg, IL 60193

VILLAGE OF SCHAUMBURG
PROGRESS THROUGH THOUGHTFUL PLANNING

A G E N D A

Informational

Watch Live Webcast Here:

https://youtube.com/live/X0WKMvQWwXI?feature=share

Thank you for your interest in Schaumburg Village Board meetings! Regular meetings of the Village Board are held at 7 pm on the second and fourth Tuesday of each month at the Schaumburg Village Hall in the Board Room at 1000 Woodfield Road. Members of the public are welcome to attend.

The Village Board uses a consent agenda for its meetings. The consent agenda is comprised of recommendations that have been advanced by 7 standing committees. These standing committee meetings are open to the public and held at regularly scheduled dates and times. Standing committees review items in detail and allow the members to discuss items, reach consensus, and make non-binding recommendations to the full Village Board. Because the items advanced by standing committees have been fully discussed at the committee level, recommendations are generally not subject to further deliberation at Village Board meetings. Items on the consent agenda may also be recommended by the Zoning Board of Appeals, Plan Commission, or the Village Manager. An elected official, staff member, or member of the general public may request that an item be removed from the consent agenda for further discussion. If there is such a request, the item can be removed from the consent agenda and discussed under committee reports.

PLEASE SILENCE ALL CELL PHONES AND ELECTRONIC DEVICES.

I. Call to Order

II. Roll Call

III. Pledge of Allegiance

IV. Approval of Minutes

A. March 24, 2026

V. Approval of Expenditures

A. $11,666,370.57

VI. Liquor License Requests

A. Request from Ms. Allie Montecheze for One (1) Class K Liquor License for Target located at 1235 E. Higgins Road (New License).

VII. Consent Agenda

The Consent Agenda will be read in its entirety and voted on as one motion to approve. If you wish to discuss an item further, please indicate that when the item is read by the Village Clerk so that it can be removed from the Consent Agenda and discussed further under Committee Reports. Otherwise, all items will be approved as presented on the Consent Agenda.

VIII. Liquor License Requests - One (1) Day Liquor License Requests

A. Recommendation to Approve the Request from Schaumburg Township Elementary School Foundation for One (1) Class D One Day Liquor License for the Annual Golf Outing and to Waive the Fee
- [motion] to recommend the Village Board approve the request from Mr. Andy Murray of Schaumburg Township Elementary School Foundation for One (1) Class D One Day Liquor License for the Annual Golf Outing on June 8, 2026 at the Schaumburg Golf Club located at 401 N. Roselle Road (Waived Fee).

B. Recommendation to Approve the Request from Chicago's Leading Edge for One (1) Class D One Day Liquor License for the Fundraiser and to Waive the Fee
- [motion] to recommend the Village Board approve the request from Ms. Bailey Reiners of Chicago's Leading Edge for One (1) Class D One Day Liquor License for the Hangar Fundraiser on June 13, 2025 at Schaumburg Regional Airport located at 905 W. Irving Park Road (Waived Fee).

C. Recommendation to Approve the Request from Schaumburg Business Association for One (1) Class D One Day Liquor License for the Golf Classic and to Waive the Fee
- [motion] to recommend the Village Board approve the request from Ms. Kayleigh Burnitz of the Schaumburg Business Association for One (1) Class D One Day Liquor License for the Golf Classic on June 17, 2026 at the Schaumburg Golf Club located at 401 N. Roselle Road (Waived Fee).

IX. Correspondence

A. Recommendation to Approve the Request from League of Women Voters of Palatine, Barrington & Schaumburg Areas to Hold a Raffle
- [motion] to recommend the Village Board approve the request from League of Women Voters of Palatine, Barrington & Schaumburg Areas to hold a raffle on May 2, 2026 at Bella Napoli, located at 1540 N. Roselle Road, and to waive the fidelity bond requirement

B. Recommendation to Approve the Request from the Schaumburg Business Association to Hold a Raffle
- [motion] to recommend the Village Board approve the request from Schaumburg Business Association to hold a raffle on June 17, 2026 at Schaumburg Golf Club located at 401 N. Roselle Road, and to waive the fidelity bond requirement.

X. Proclamations

A. Bike Month - June 2026

XI. Engineering and Public Works Committee

A. Recommendation to Approve the FY 26/27 Vehicle Replacement Plan
- [motion] to recommend the Village Board approve the FY 26/27 Vehicle Replacement Plan in the amount of $2,465,000.

B. Recommendation to Approve an Ordinance Authorizing Disposal of FY 26/27 Replaced/Surplus Vehicles
- [motion] to recommend the Village Board adopt an Ordinance authorizing the Disposal of Surplus Vehicles as listed on the FY 26/27 Vehicle Replacement Schedule.

C. Recommendation to Authorize Participation in the Suburban Purchasing Cooperative and Award the Purchase of Fuel to Al Warren Oil Co. Inc.
- [motion] to recommend the Village Board authorize participation in the Suburban Purchasing Cooperative Contract and award the Purchase of Fuel to Al Warren Oil Co. Inc. of Hammond, IN, from May 1, 2026 through July 1, 2028, contingent upon the cooperative renewing the Contract to Al Warren Oil Co.

D. Recommendation to Approve Waiver of Competitive Bidding and Award the Purchase of Vehicle Parts with TransChicago Truck Group
- [motion] to recommend the Village Board approve waiver of competitive bidding and award the Purchase of Vehicle Parts with TransChicago Truck Group of Elmhurst, IL, not to exceed the budgeted amount.

E. Recommendation to Award Bid for the Salt Conveyor Replacement Project to Kimco USA Inc.
- [motion] to recommend the Village Board award the bid for the Salt Conveyor Replacement Project to Kimco USA Inc. of Marshall, IL, for FY 26/27 in an amount not to exceed $598,524.86, and approve the required Resolution.

F. Recommendation to Approve an Intergovernmental Agreement for the Traffic Signal Enhancements at Roselle Road and Hartford Drive with the Cook County Department of Transportation and Highways
- [motion] to recommend the Village Board authorize the Village President and Village Clerk to execute an agreement for the Traffic Signal Enhancements at Roselle Road and Hartford Drive with the Cook County Department of Transportation and Highways, and approve the required Resolution.

G. Recommendation to Approve Utilization of Illinois Motor Fuel Tax Funds for Maintenance of Streets and Highways for FY 26/27
- [motion] to recommend the Village Board approve the Resolution to Utilize Motor Fuel Tax funds in accordance with the Illinois Department of Transportation Resolution for Maintenance of Streets and Highways by Schaumburg under the Illinois Highway Code (2026-2027).

H. Recommendation to Approve an Agreement for the Twelfth Year of Metropolitan Water Reclamation District of Greater Chicago Infiltration/Inflow Control Program - Phases I, II, and III with RJN Group, Inc.
- [motion] to recommend the Village Board authorize the Village Manager and Village Clerk to execute an agreement for the Twelfth Year of Metropolitan Water Reclamation District of Greater Chicago Infiltration/Inflow Control Program for Phases I, II, and III with RJN Group, Inc. of Wheaton, IL, in the amount of $406,572, and approve the required Resolution.

I. Recommendation to Approve an Agreement for the 90 North TIF Management Services with Michael Baker International
- [motion] to recommend the Village Board authorize the Village Manager and Village Clerk to execute an agreement for the 90 North TIF Management Services with Michael Baker International of Chicago, IL in the amount of $447,684, and approve the required Resolution.

J. Recommendation to Approve a Resolution for Eliminating the Need for Surety Bond Requirements for Permit Work to be Performed on State Maintained Right-of-Way
- [motion] to recommend the Village Board approve a Resolution eliminating the need for a Surety Bond requirement for Permit Work to be Performed by the Village of Schaumburg on State maintained Right-of-Way.

K. Recommendation to Award Bid for the 2026 Street Improvement Program – Contract No. 1 to Builders Paving LLC
- [motion] to recommend the Village Board award the bid for the 2026 Street Improvement Program – Contract No. 1 to the lowest responsible bidder, Builders Paving LLC of Hillside, IL, in the amount of $3,193,808.

XII. Health and Human Services Committee

A. Recommendation to Adopt an Ordinance Dissolving the Schaumburg Board of Health
- [motion] to recommend the Village Board adopt an Ordinance Dissolving the Schaumburg Board of Health.

XIII. Transportation Committee

A. Recommendation to Approve an Increase to the Hourly Rate for the Dial-A-Ride Transportation (DART) Service
- [motion] to recommend the Village Board approve an hourly rate increase to $116.54 for MV Transportation for Dial-A-Ride Transportation (DART) Service with a total agreement amount not to exceed $1,901,932.80.

B. Recommendation to Approve Lead-Lag Traffic Signal Operations on Meacham Road
- [motion] to recommend the Village Board approve Lead-Lag traffic signal operations on Meacham Road.

XIV. Planning, Building, and Development Committee

A. Recommendation to Approve a Contract with Christopher Burke Engineering for Interim Engineering Services
- [motion] to recommend the Village Board approve a contract with Christopher Burke Engineering of Rosemont, IL for Interim Engineering Services in an amount not to exceed $282,828 not to exceed the approved FY 26/27 budget, and approve the required Resolution.

B. Recommendation to Authorize the Village Manager to Execute a One-Year Extension to the Contract with TPI Building Code Consultants, Inc. for Building Inspection and Plan Review Services
- [motion] to recommend the Village Board authorize the Village Manager to execute a one-year contract extension with TPI Building Code Consultants, Inc. of South Elgin, IL, for building inspection and plan review services in an amount not to exceed the approved FY 26/27 budget, and approve the required Resolution.

C. Recommendation to Amend the Fee Schedule Pertaining to Building and Landscape Reinspection Fees
- [motion] to recommend the Village Board approve an amendment to the fee schedule pertaining to reinspection fees.

XV. Resolutions (Next Res. R-26-029)

A. Resolution No. R-26-_____A Resolution Authorizing the Village Manager to Execute a Professional Services Agreement with Christopher Burke Engineering, Ltd. to Provide Interim Staffing for the Position of Community Development Engineer.

B. Resolution No. R-26-_____A Resolution Authorizing the Renewal of a Professional Services Agreement with T.P.I. Building Code Consultants, Inc. to Perform Building Inspection and Plan Review Services.

C. Resolution No. R-26-_____A Resolution Authorizing the Execution of a Real Estate Purchase and Sale Agreement for the Acquisition of Property Located at 218 West Schaumburg Road, Schaumburg, Illinois.

D. Resolution No. R-26-_____A Resolution to Utilize Motor Fuel Funds in Accordance with the Illinois Department of Transportation Resolution for Maintenance of Streets and Highways by Schaumburg Under the Illinois Highway Code (2026-2027) (Salt Conveyor).

E. Resolution No. R-26-_____A Resolution Authorizing the Village President and Village Clerk to Execute an Agreement for Traffic Signal Enhancements at Roselle Road and Hartford Drive with the Cook County Department of Transportation and Highways.

F. Resolution No. R-26-_____A Resolution Authorizing the Village Manager and Village Clerk to Execute an Agreement for the Twelfth Year of Metropolitan Water Reclamation District of Greater Chicago Infiltration/Inflow Control Program for Phases I, II, and III with RJN Group, Inc.

G. Resolution No. R-26-_____A Resolution Eliminating the Need for a Surety Bond Requirement for Permit Work to be Performed by the Village of Schaumburg on State Maintained Right-of-Way.

H. Resolution No. R-26-_____A Resolution Authorizing the Village Manager and Village Clerk to Execute an Agreement for 90 North TIF Management Services with Michael Baker International.

I. Resolution No. R-26-_____A Resolution to Utilize Motor Fuel Funds in Accordance with the Illinois Department of Transportation Resolution for Maintenance of Streets and Highways by Schaumburg Under the Illinois Highway Code (2026-2027).

XVI. Ordinances (Next Ord. 26-028)

A. Ordinance No. 26-_____ An Ordinance Amending Title 3, Chapter 41, Section 41.01 of the Schaumburg Village Code Relative to the Village Fee Schedule [first reading – motion to waive first reading].

B. Ordinance No. 26-_____ An Ordinance Authorizing the Disposal of Surplus Personal Property Owned by the Village of Schaumburg [first reading - motion to waive first reading].

C. Ordinance No. 26-_____An Ordinance Dissolving the Schaumburg Board of Health [first reading – motion to waive first reading].

XVII. Committee Reports

XVIII. Comments from the Public

XIX. Counsel Report

XX. President's Report

A. Resignations/Appointments of Committee Members

XXI. Manager's Report

XXII. Trustee Comments

XXIII. Adjournment

XXIV. Executive Session

A. In accordance with Section 2(c)(2) of the Open Meetings Act, (Collective Bargaining). Collective negotiating matters between the public body and its employees or their representatives, or deliberations concerning salary schedules for one or more classes of employees.

XXV. Reconvene

In compliance with the Americans with Disabilities Act and other applicable Federal and State laws, the meeting will be accessible to individuals with disabilities. Persons requiring auxiliary aids and/or services should contact the Village Manager's Office at 847.923.4705, preferably no later than five days before the meeting.

VILLAGE OF SCHAUMBURG

AGENDA ITEM SUMMARY

March 24, 2026
04/14/26
Village Board

Presenter:
Lead Department: General Government

Executive Summary:

Recommended Action:

ATTACHMENTS:
- 2026-03-24.docx

VILLAGE OF SCHAUMBURG **"UNAPPROVED"**
VILLAGE BOARD MINUTES
TUESDAY, MARCH 24, 2026
PARKER HALL

M I N U T E S

I. CALL TO ORDER: 7:00 PM

II. Roll Call – Trustee Patel, Clar, Sullivan, Madej, Bieschke, LaRosa
President Dailly

STAFF PRESENT: B. Townsend – Village Manager
P. Hewson – Deputy Village Manager
L. Malina – Village Attorney
D. Bourgault – Village Attorney
F. Puccini – Fire Chief
G. Wolf - Chief of Police
L. Petersen – Director/Finance
R. Franklin – Assistant Director/Community Development
E. Dechant – Assistant Director/Economic Development
S. Kenyon – Director/Transportation
M. Hall – Director/Engineering & Public Works
P. Schaak – Director/Information Technology
J. Carey – Director/Human Resources
T. Weiler – Director/Cultural Services
K. Schref – Director/Communications and Outreach

OTHERS PRESENT: H. Raimondi – Chairman/Zoning Board of Appeals

III. PLEDGE OF ALLEGIANCE:

The pledge of allegiance was led by Trustee Sullivan.

IV. APPROVAL OF MINUTES:

A. Trustee LaRosa made a motion to approve the March 10, 2026, Village Board Minutes and Trustee Patel seconded the motion. Voice vote – 6-0. Motion carried unanimously.

V. APPROVAL OF EXPENDITURES:

$5,724,563.37 – Trustee Clar made a motion to approve the expenditures as presented and Trustee Sullivan seconded the motion. Roll Call – Trustee Patel, Clar, Sullivan, Madej, Bieschke, LaRosa. No Trustee voted nay. Motion carried unanimously.

VI. PRESENTATIONS

A. Presentation of Retirement Plaque/Forty Years of Service to Edward Piepenbrink, Maintenance II

President Dailly congratulated Edward Piepenbrink on his retirement thanked him for his 40 years' service to the Village and presented him with his award.

VII. CONSENT AGENDA:

President Dailly stated the consent Agenda will be read in its entirety and voted on as one motion to approve. If you wish to discuss an item further, please indicate that when the item is read by the Village Clerk so it can be removed from the Consent Agenda and discussed further under Committee Reports. Otherwise, all items will be approved as presented on the Consent Agenda.

Jane Lentino, Village Clerk, read the Consent Agenda.

VII. Consent Agenda

The Consent Agenda will be read in its entirety and voted on as one motion to approve. If you wish to discuss an item further, please indicate that when the item is read by the Village Clerk so that it can be removed from the Consent Agenda and discussed further under Committee Reports. Otherwise, all items will be approved as presented on the Consent Agenda.

VIII. Liquor License Requests - One (1) Day Liquor License Requests

1. Recommendation to Approve the Request from Slow-Pitch Softball Association for Three (3) Class D One Day Liquor Licenses for a charity event and to Waive the Fee
2. - [motion] to recommend the Village Board approve the request from Mr. Ray Czarnik of Slow-Pitch Softball Association for Three (3) Class D One Day Liquor Licenses for SSA Tom "Eggs" Czarnik Class "A" No-Glove National Championship Event June 26-28, 2026, at Olympic Park located at 1675 Old Schaumburg Road (Waived Fee).

IX. Correspondence

A. Recommendation to Ratify the Request from Municipal Clerks Association North/Northwest Suburbs to Hold a Raffle
- [motion] to recommend the Village Board ratify the request from Municipal Clerks Association North/Northwest Suburbs, who held a raffle on March 12, 2026, at Bella Napoli located at 1540 N. Roselle Road, and request to waive the fidelity bond requirement.

B. Recommendation to Approve the Request from District 54 Education Foundation to Hold a Raffle

- [motion] to recommend the Village Board approve the request from District 54 Education Foundation to hold a raffle on June 8, 2026, at Schaumburg Golf Club located at 401 N. Roselle Road.

C. Recommendation to Approve the Request from Schaumburg Firefighters Benevolent Association to Hold a Raffle
- [motion] to recommend the Village Board approve the request from Schaumburg Firefighters Benevolent Association to hold a raffle on May 3, 2026, at Hyatt Regency Schaumburg located at 1800 E. Golf Road. Since the price per raffle ticket is over $5, they are requesting a variance to Chapter 117.31 of the Schaumburg Municipal Code.

X. Engineering and Public Works Committee

A. Recommendation to Approve an Agreement for the Walnut Lift Station Project – Phase III Construction Administration with Ciorba Group, Inc.
- [motion] to recommend the Village Board authorize the Village Manager and Village Clerk to execute an agreement for the Walnut Lift Station Reconstruction – Phase III Construction Engineering Services with Ciorba Group Inc. in the amount of $169,983.10 and approve the required Resolution.

B. Recommendation to Award Bid for Contractual Pavement Marking to Precision Pavement Markings, Inc.
- [motion] to recommend the Village Board award the bid for Contractual Pavement Marking to Precision Pavement Markings, Inc. of Pingree Grove, IL, in an amount not to exceed $258,605 for FY 26/27, with three optional one-year extensions.

C. Recommendation to Approve the Municipal Grounds Electrical Upgrade Project with Camosy Construction
- [motion] to recommend the Village Board approve the Municipal Grounds Electrical Upgrade Project with Camosy Construction of Zion, IL in the not to exceed amount of $375,000.

D. Recommendation to Approve Waiver of Competitive Bidding and Award the Purchase of Furniture to BOS of Illinois, Inc.
- [motion] to recommend the Village Board approve waiver of competitive bidding and award the Purchase of Furniture to BOS of Illinois, Inc. of Roselle, IL in the amount of $2,141,939.17.

E. Recommendation to Approve Waiver of Competitive Bidding and Award the Purchase of Furniture to Continua Interiors of Illinois, Inc.
- [motion] to recommend the Village Board approve waiver of competitive bidding and award the Purchase of Furniture to Continua Interiors of Illinois, Inc. of Lincolnshire, IL in the amount of $121,790.

F. Recommendation to Approve Waiver of Competitive Bidding and Award a Sole Source Contract for Safety Netting to National Sports Nets, LLC

- [motion] to recommend the Village Board approve waiver of competitive bidding and award the sole source contract for Safety Netting to National Sports Nets, LLC of Lemont, IL, in the amount of $85,928.

G. Recommendation to Accept Improvements at the Summit Grove Subdivision
- [motion] to recommend the Village Board accept the subject improvements as depicted in the Exhibits, and direct staff to obtain a Bill of Sale, at no cost to the Village, from Nitti Development for the subject improvements, and approve the required Resolution.

XI. Finance, Legal, and General Government Committee

A. Finance Department Monthly Report for February 2026
- [motion] to recommend to the Village Board to approve the Finance Department Monthly Report for February 2026.

B. Recommendation to Amend Policy Statement 1.26 - Procedural Rules for Remote Attendance at Village Meetings
- [motion] to recommend the Village Board refer the amendment to Policy Statement 1.26 Procedural Rules for Remote Attendance at Village Meetings to the Committee of the Whole.

C. Recommendation to Approve Waiver of Competitive Bidding and Award the Purchase of New Firefighter Turnout Gear to Municipal Emergency Services (MES)
- [motion] to recommend the Village Board waive competitive bidding and approve the purchase of New Firefighter Turnout Gear from Municipal Emergency Services (MES) of Lombard, IL in the amount of $199,305.

D. Recommendation to Approve Annual Non-Union Pay Plan Adjustments for FY26-27
- [motion] to recommend the Village Board approve adjusting the non-union pay ranges effective May 1, 2026, and approve the required Resolution.

E. Recommendation to Approve the Village Manager to Execute Year 2 of the Enterprise and Temporary Village Hall Agreements with Comcast for MetroE and Internet Connection Services
- [motion] to recommend the Village Board authorize the Village Manager to execute year 2 of the Comcast service agreement for the Temporary Village Hall, year 2 of the separate Comcast agreement for all other village facilities and associated annual payments to Comcast for MetroE Internet services in the amount of $184,752.

F. Recommendation to Approve Year Two of the Five-Year Contract of the Enterprise Phone System with RingCentral
- [motion] to recommend the Village Board approve renewal for the enterprise phone system to RingCentral for year two of a five-year contract and issue a paydown purchase order in the amount of $143,216.

G. Recommendation to Waive Competitive Bidding and Approve Renewal of Microsoft Cloud Services Infrastructure Subscription with Microsoft Corporation
- [motion] to recommend the Village Board waive competitive bidding, and approve a renewal of Microsoft Azure licensing subscription, and issue a paydown purchase order to Microsoft Corporation of Redmond, WA in the amount of $180,000.

H. Recommendation to Waive Competitive Bidding and Approve Renewal of Microsoft 365 License Subscription with LiftOff, LLC.
- [motion] to recommend the Village Board waive competitive bidding, and approve a renewal of Microsoft 365 licensing subscription, and issue a paydown purchase order to LiftOff, LLC, of Crofton, MD up to the FY27 Budgeted amount.

XII. Public Safety Committee

A. Recommendation to Approve Intergovernmental Agreement with Harper College for Calls for Service at Harper Professional Center
- [motion] to recommend the Village Board authorize the Village President to execute an Intergovernmental Agreement with Harper College for Calls for Service at Harper Professional Center, and approve the required Resolution.

XIII. Committee of the Whole

A. Recommendation to Approve the Purchase of New Art Pieces for the Schaumburg Sculpture Park
- [motion] to recommend the Village Board approve the purchase of new art pieces for the Schaumburg Sculpture Park in the amount of $117,500.

B. Recommendation to Approve Renaming the Al Larson Prairie Center for the Arts
- [motion] to recommend the Village Board approve renaming the Al Larson Prairie Center for the Arts to the Al Larson Cultural Center.

C. Recommendation to Approve Naming Designations for Village Buildings
- [motion] to recommend the Village Board approve naming the municipal campus the Robert O. Atcher Municipal Campus and to name the new village hall Schaumburg Village Hall.

XIV. Zoning Board of Appeals

A. Recommendation to Approve a Valet Parking Plan for Duly Health and Care / 1325 N. Meacham Road
- motion to recommend the Village Board Approve a Valet Parking Plan for Duly Health and Care (1325 N. Meacham Road - Z2601-06).

XV. Award of Bid

A. Recommendation to Award Bid for the 2026 Community Development Block Grant (CDBG) Annual Sidewalk Program to Schroeder & Schroeder, Inc.
- [motion] to recommend the Village Board award the bid for the 2026 Community Development Block Grant (CDBG) Annual Sidewalk Program to the lowest responsible bidder Schroeder & Schroeder, Inc of Skokie, IL, in the amount of $179,000.

B. Recommendation to Award Bid for Contractual Street Sweeping to Lakeshore Recycling Systems, LLC
- [motion] to recommend the Village Board award the bid for Contractual Street Sweeping to the lowest responsible bidder, Lakeshore Recycling Systems, LLC of Morton Grove, IL, for FY 26/27 with three optional one-year extensions not to exceed the approved budget.

C. Recommendation to Award Bid for the Material Storage Yard to Acura Inc.
- [motion] to recommend the Village Board award the bid for the Material Storage Yard to the lowest responsible bidder, Acura Inc. of Bensenville, IL, for FY 26/27 in an amount not to exceed $376,573.

D. Recommendation to Award Bid for the 2026 Water Main Replacement with the Streets Program to C. Szabo Contracting Inc.
- [motion] to recommend the Village Board award the bid for the 2026 Water Main Improvement Program to the lowest responsible bidder, C. Szabo Contracting Inc. of West Chicago, IL, in the amount of $2,986,905.

XVI. Traffic Agreements

A. Recommendation to Approve a Traffic Agreement with BMW of North America, LLC for the property located at 498 Commerce Drive
- [motion] to recommend the Village Board authorize the Village Manager to execute the Traffic Agreement by and between the Village of Schaumburg and BMW of North America, LLC located at 498 Commerce Drive.

B. Recommendation to Approve a Traffic Agreement with NARE Crossroads of Schaumburg, LLC for the property located at 1200 N. Meacham Road
- [motion] to recommend the Village Board authorize the Village Manager to execute the Traffic Agreement by and between the Village of Schaumburg and NARE Crossroads of Schaumburg, LLC located at 1200 N. Meacham Road.

XVII. Resolutions (Next Res. R-26-024)

A. Resolution No. R-26-024 A Resolution Authorizing the Village Manager and Village Clerk to Execute an Agreement for the Walnut Lift Station Reconstruction – Phase III Construction Engineering Services with Ciorba Group Inc.

B. Resolution No. R-26-025 A Resolution Accepting the Summit Grove Subdivision Public Improvements.

C. Resolution No. R-26-026 A Resolution Setting Forth the Official Pay Plan for Non-Union Employees of the Village of Schaumburg for Fiscal Year 2026-2027.

D. Resolution No. R-26-027 A Resolution Approving and Authorizing the Execution of an Intergovernmental Agreement between Community College District 512 (Harper College) and the Village of Schaumburg Relative to Law Enforcement Cooperation at the Harper College Schaumburg Campus.

E. Resolution No. R-26-028 A Resolution in Support of Maintaining Municipal Local Zoning and Land Use Authority.

XVIII. Ordinances (Next Ord. 26-027)

A. Ordinance No. 26-027 An Ordinance Granting a Valet Parking Plan for Duly Health and Care (1325 N. Meacham Road - Z2601-06) [first reading - motion to waive first reading].

Trustee Sullivan made a motion to approve the Consent Agenda with the following exceptions and Trustee Bieschke seconded the motion. Roll Call – Trustee Patel, Clar, Sullivan, Madej, Bieschke, LaRosa voted aye. No Trustee voted nay. Motion carried unanimously.

XVIII. COMMITTEE REPORTS:

No Committee Reports.

XIX. COMMENTS FROM THE AUDIENCE:

A. Anna Klimkowicz, Addictions Counselor at the Share Program in Hoffman Estates, which is an in-patient drug and alcohol treatment facility. She said alcohol and drug addiction is a visible disease and she is here to bring awareness to the invisible disease of gambling disorder. She said March is Problem Gambling Awareness Month. She said the 2026 theme is Caring Communities, Stronger Futures and emphasizes the importance of a community drives approach to problem gambling awareness and support. Ms. Klimkowicz left information regarding gambling in the State of Illinois and throughout the United Stated. She said more information is available through the Illinois Council on Problem Gambling, the National Council on Gambling, and the Are You Really Winning Campaign at www.areyoureallywinning.com.

President Dailly thanked Ms. Klimkowicz for continuing to raise awareness. He said when the Village decided to allow video gaming, the Village also decided to dedicate a portion of the revenue that is set aside on an annual basis to be donated to different addiction centers.

B. Laurie Walter came forward to request the Village Board's assistance in reaching an equitable AFSCME contract. She said they appreciate that there has been movement with negotiations, it is not enough to address the reality being faced. She said the start of new fiscal year is one month away and, if an agreement is not reached, it will be the second year in a row without increasing union member compensation, and the cost of living continues to rise while compensation is falling behind. She said they continue to take pride in the work they do everyday and believe and their efforts deserve the same recognition as their non-union counterparts, who received raises last year and are scheduled to receive an increase on May 1st. She said they are asking for fair and equal treatment and should not have to fight wage adjustments that reflect industry standards.

President Dailly said the Board recognizes the employees and supports the work they do.

XX. COUNSEL REPORT:

No Counsel Report.

XXI. PRESIDENT'S REPORT:

No President's Report.

XXII. MANAGER'S REPORT:

No Manager's Report.

XXIII. TRUSTEE COMMENTS/MENTIONS:

No Trustee Comments/Mentions

XXIV. ADJOURNMENT:

Trustee Clar made a motion to adjourn the Village Board meeting at 7:23 PM and Trustee Patel seconded the motion. Voice vote – 6-0. Motion carried unanimously. Roll Call – Trustee Patel, Clar, Sullivan, Madej, Bieschke, LaRosa. No Trustee voted nay. Motion carried unanimously.

_____ _____

Jane Lentino
Village Clerk

Date Approved

VILLAGE OF SCHAUMBURG

AGENDA ITEM SUMMARY

$11,666,370.57
04/14/26
Village Board

Presenter:
Lead Department: Finance

Executive Summary:

Recommended Action:

ATTACHMENTS:
- 2026-04-14 Bills List Approval.pdf

VILLAGE OF SCHAUMBURG

PROGRESS THROUGH THOUGHTFUL PLANNING

MEMORANDUM

DATE: April 10, 2026

TO: President, Village Board, Village Clerk

FROM: Director of Finance

SUBJECT: Approval of Disbursements

Attached is a summary of bills to be presented for approval at the April 14, 2026 meeting of the Village Board of Trustees. The total amount of the bills list for approval is $9,445,691.51. These bills lists are dated March 21, 2026 through April 10, 2026.

Also for approval is the payroll dated April 3, 2026 for a total amount of $2,220,679.06.

The total amount of disbursements for approval is $11,666,370.57.

Lisa Petersen
Director of Finance

Village of Schaumburg
Check Runs: 4/4/2026 - 4/10/2026

VENDOR/PAYEE NAME	Check Date	Check Amount	Description
Adan Perez Jr	April 2026	$435.00	Mileage Reimbursement
	April 2026	$35.00	Training Reimbursement
		$470.00	
Air One Equipment Inc	April 2026	$469.00	Firefighter Boots
	April 2026	$1,452.00	Firefighter Gear
	April 2026	$2,167.00	Firefighter Gear
	April 2026	$29.25	GI Regulator
	April 2026	$150.00	SCBA Hydrotest
		$4,267.25	
Alexandra Moss	April 2026	$180.52	Mileage Reimbursement
		$180.52	
Alvarez and Associates	April 2026	$4,000.00	Professional Lobbying Services
		$4,000.00	
American Public Transportation	April 2026	$3,000.00	Membership Dues
		$3,000.00	
Anna Jurek	April 2026	$128.46	ICC Reimbursement
	April 2026	$15.95	Mileage Reimbursement
		$144.41	
Anthony Piccolo	April 2026	$64.23	Mileage Reimbursement
		$64.23	
Applied Concepts Inc	April 2026	$2,624.99	DSR Radar w/Instant Remote
		$2,624.99	
AT&T	April 2026	$680.42	Telephone Service
		$680.42	
Baxter & Woodman Inc	April 2026	$840.91	MS4 Engineering Consulting
	April 2026	$4,565.00	Risk & Resiliency Assessment
	April 2026	$2,044.68	SCADA Maintenance & Support
		$7,450.59	
Bear Construction Company	April 2026	$22,024.21	Lecture Hall/Peg Studio PCA
		$22,024.21	
Belmonte Printing Company	April 2026	$2,256.00	90N TIF Amendment Mailing Labor
	April 2026	$81.00	Business Cards
	April 2026	$95.00	Business Cards
	April 2026	$95.00	Business Cards
	April 2026	$95.00	Juvenile Expungement Cards
	April 2026	$1,016.00	PD Envelopes
		$3,638.00	
Benjamin Gorski	April 2026	$175.00	Training Reimbursement

	April 2026	$232.87	Travel Reimbursement
		$407.87	
Bernard Mukes	April 2026	$184.88	Mileage Reimbursement
		$184.88	
Bestco Benefit Plans LLC	April 2026	$37,951.37	Benistar Retiree Coverage
		$37,951.37	
Camosy Incorporated	April 2026	$3,483,119.69	Construction - New Village Hall Facility
	April 2026	$7,475.00	Preconstruction Service for PD
		$3,490,594.69	
CDWG LLC	April 2026	$1,781.48	Surface Pro and Keyboard
	April 2026	$239.61	Surface Pro Service
		$2,021.09	
Cellebrite USA Corporation	April 2026	$10,784.25	Inseyets Subscriptions and Upgrade
		$10,784.25	
Charles Tragus	April 2026	$5,000.00	Axe Plaques
		$5,000.00	
Chem-Wise Ecological Pest Management	April 2026	$640.00	Pest Management
		$640.00	
Chicago Quick Clean LLC	April 2026	$1,255.38	Cleaning Services 90N Parking Garage
		$1,255.38	
Christopher B Burke Engineering Ltd	April 2026	$2,200.00	Professional Services
	April 2026	$7,650.00	Professional Services
		$9,850.00	
Citi Cards - Costco	April 2026	$594.64	Fire Dept Supplies
		$594.64	
Citywide Elevator Inspection Services Inc	April 2026	$160.00	Elevator Inspection Services
		$160.00	
Civiltech Engineering Inc	April 2026	$4,149.67	Braintree Drive Reconstruction
		$4,149.67	
Clark Baird Smith LLP	April 2026	$14,057.50	Professional Services
		$14,057.50	
Commonwealth Edison	April 2026	$58.75	Utility Service
	April 2026	$88.78	Utility Service
	April 2026	$105.10	Utility Service
	April 2026	$176.87	Utility Service
	April 2026	$217.77	Utility Service
	April 2026	$228.05	Utility Service
	April 2026	$319.11	Utility Service
	April 2026	$321.59	Utility Service

	April 2026	$340.12	Utility Service
	April 2026	$503.40	Utility Service
	April 2026	$1,156.70	Utility Service
	April 2026	$8,305.84	Utility Service
	April 2026	$23,030.44	Utility Service
		$34,852.52	
Compass Minerals America Inc	April 2026	$3,043.97	Bulk Salt Purchase
	April 2026	$36,211.21	Bulk Salt Purchase
		$39,255.18	
Construction & Geotechnical Material Testing, Inc.	April 2026	$2,000.00	Field Soil Sampling Lab Analysis Reporting
		$2,000.00	
Cook County	April 2026	$176.00	Recording Fees
	April 2026	$50,000.00	Rent for 2222 Hammond
	April 2026	$50,000.00	Rent for 2222 Hammond
		$100,176.00	
Costar Realty Information Inc	April 2026	$855.71	Monthly Subscription
		$855.71	
Crawford Murphy & Tilly Inc	April 2026	$349.48	Construction Admin for Airport Security Gate
	April 2026	$7,608.37	Hangar D&E Pavement Construction Svcs
	April 2026	$958.11	Self-Serve Aviation Fuel Pump Const Admin
		$8,915.96	
Czaplicki Lopez, PLLC	April 2026	$1,000.00	Bridge Inspections
		$1,000.00	
DACRA Adjudication Systems LLC	April 2026	$3,594.00	Monthly Service Fee
	April 2026	$4,362.00	Monthly Service Fee
		$7,956.00	
David Carlson	April 2026	$398.75	Mileage Reimbursement
		$398.75	
Diverzify Buyer, LLC	April 2026	$31,734.00	PCA Flooring Replacement
		$31,734.00	
DJ's Scuba Locker Inc	April 2026	$4,894.83	Annual Maintenance for Dive Gear
	April 2026	$1,934.00	Dive Rescue Suit
		$6,828.83	
Donald Richter	April 2026	$86.27	Mileage Reimbursement
		$86.27	
DST Commercial LLC	April 2026	$899,481.70	Reimbursement #7 The District at Veridian
		$348,107.03	Reimbursement #8 The District at Veridian
		$1,247,588.73	
DST Veridian LLC	April 2026	$594,996.30	Reimbursement #7 For District at Veridian

		$594,996.30	
Edward Scheid	April 2026	$289.27	Mileage Reimbursement
		$289.27	
Elizabeth DeChant	April 2026	$78.81	Mileage Reimbursement
		$78.81	
ENGIE North America Inc	April 2026	$170.91	Utility Service
	April 2026	$1,858.86	Utility Service
	April 2026	$3,345.17	Utility Service
		$5,374.94	
Ferguson US Holdings, Inc	April 2026	$2,775.00	Potable Water Meters
		$2,775.00	
Finer Line Inc	April 2026	$254.63	Employee Service/Retirement Awards
		$254.63	
Fotokite US LLC	April 2026	$39,914.15	Tethered Drone
		$39,914.15	
Garland/DBS Inc	April 2026	$44,462.35	PCA Lecture Hall Roof and Screen Wall Rehab
		$44,462.35	
H & H Electric Company	April 2026	$1,968.65	Traffic Signal/Opticom & Street Light Maintenance
	April 2026	$4,260.42	Traffic Signal/Opticom & Street Light Maintenance
	April 2026	$9,509.93	UPS and Electric Connection Shared Street Project
		$15,739.00	
Hayes Commercial LLC	April 2026	$1,214.46	HVAC Repair & Maintenance of Buildings
		$1,214.46	
Henry Schein Inc	April 2026	$441.00	EMS Manikin Chest Piece
	April 2026	$340.00	EMS Supplies
	April 2026	$1,035.00	EMS Supplies
	April 2026	$2,098.80	EMS Supplies
		$3,914.80	
Holiday Airways	April 2026	$9,465.19	Energy Cost Reimbursement
		$9,465.19	
Home Depot Inc	April 2026	$155.17	Operating Supplies
		$155.17	
HR Green Inc	April 2026	$9,787.64	Prelim Eng Svcs Bode Rd Improvements
	April 2026	$27,822.24	Prelim Eng Svcs Bode Rd Improvements
		$37,609.88	
IL Department of Innovation &Technology	April 2026	$72.79	Communication Charges
		$72.79	
Iteris Inc	April 2026	$9,623.35	On-Call Engineering Services
		$9,623.35	

James Drive Safety Lane, LLC	April 2026	$328.00	Safety Lane Inspections
		$328.00	
Janelle Dougherty	April 2026	$97.15	Mileage Reimbursement
	April 2026	$117.45	Mileage Reimbursement
		$214.60	
Jessica K. Crowley	April 2026	$2,400.00	Public Safety Wellness Coordinator
		$2,400.00	
Johnny's Coffee Mart LLC	April 2026	$700.00	Custodial Services – Metra Station
		$700.00	
Joseph D Davito	April 2026	$5,392.50	Professional Services
		$5,392.50	
Justin Babor	April 2026	$686.76	Travel Reimbursement
		$686.76	
Kathleen Henkelman	April 2026	$194.30	Mileage Reimbursement
		$194.30	
Kimley-Horn & Associates Inc	April 2026	$13,037.23	Springinsguth Rd Design Eng Svcs
		$13,037.23	
LinkedIn Corporation	April 2026	$2,175.00	Recruiting Services
	April 2026	$4,100.00	Recruiting Services
		$6,275.00	
M.J. Taylor Law, LLC	April 2026	$2,000.00	Prosecution Services
		$2,000.00	
Margaret O'Brien	April 2026	$350.00	Travel Reimbursement
		$350.00	
Marisa Krawiec	April 2026	$70.32	Mileage Reimbursement
		$70.32	
Marissa Stanley	April 2026	$192.12	Mileage Reimbursement
		$192.12	
Matthew Wilson	April 2026	$25.81	Mileage Reimbursement
		$25.81	
MES I Acquisition Inc	April 2026	$4,635.61	New Firefighter Gear
	April 2026	$194,685.00	New Firefighter Gear
		$199,320.61	
Metiri Analytical Group Inc	April 2026	$1,423.00	IEPA Mandated Water Samples
		$1,423.00	
Microsoft Corporation	April 2026	$19,255.26	Microsoft Subscription
		$19,255.26	
Midway Building Services	April 2026	$37,572.92	Custodial Services
		$37,572.92	

Mingshu Zhang	April 2026	$450.00	Interpretation Fee
		$450.00	
Motorola Solutions Inc	April 2026	$2,256.81	Insert Radio Charger Multi Unit
		$2,256.81	
National Testing Network Inc	April 2026	$1,750.00	NTN Police & Fire Testing Renewal
		$1,750.00	
Nicholas Merrell	April 2026	$865.68	Travel Reimbursement
		$865.68	
Northern Illinois Gas Company	April 2026	$290.33	Utility Service
	April 2026	$366.79	Utility Service
	April 2026	$495.68	Utility Service
	April 2026	$575.95	Utility Service
	April 2026	$810.09	Utility Service
		$2,538.84	
Otava, LLC	April 2026	$952.55	VDI Cloud Migration
		$952.55	
Paddock Publications Inc	April 2026	$135.00	Legal Notice
		$135.00	
Parth Joshi	April 2026	$9.13	Mileage Reimbursement
		$9.13	
Pentegra Systems LLC	April 2026	$2,234.00	Camera Replacement Airport Fuel island
		$2,234.00	
Performance Pipelining Inc	April 2026	$175,508.66	Braintree and Asbestos Cement Pipe Rehab
		$175,508.66	
Petty Cash (Manager's Office)	April 2026	$85.00	Petty Cash Reimbursement
		$85.00	
Plote Construction Inc	April 2026	$26,600.00	Snow Removal in Cul-de-Sacs
		$26,600.00	
Pre-Paid Legal Services Inc	April 2026	$395.05	Employee Paid Legal Services
		$395.05	
Proven Business Systems	April 2026	$139.41	Copier Usage Costs
	April 2026	$1,902.60	Copier Usage Costs
		$2,042.01	
Quadient Inc	April 2026	$335.75	PD Postage Machine Maintenance
		$335.75	
Red Gate Software Limited	April 2026	$2,679.00	SQL Server Productivity Tools
		$2,679.00	
RJN Group	April 2026	$7,413.90	MWRD IICP
	April 2026	$44,328.41	MWRD IICP

		$51,742.31	
Robert Pileckis	April 2026	$2,500.00	Screen Test Student Fest Director
		$2,500.00	
Robert W. Kryder	April 2026	$5.08	Mileage Reimbursement
	April 2026	$121.46	Mileage Reimbursement
		$126.54	
Rotary Club of Schaumburg AM	April 2026	$100.00	Membership Dues
		$100.00	
Royal Refrigeration, Inc.	April 2026	$383.17	Refrigerator Repair
		$383.17	
Sadlick, William	April 2026	$135.58	Mileage Reimbursement
		$135.58	
Sarah Frank	April 2026	$175.00	Substitute Director For SYO
		$175.00	
Schroeder Asphalt Services Inc	April 2026	$63,305.15	Airport Delta & Echo Pavement
		$63,305.15	
Scot Decal Company Inc	April 2026	$543.00	Vending Decals
	April 2026	$543.00	Vending Decals
		$1,086.00	
Shawn Buckel	April 2026	$200.00	Healthy U Expo Massages
		$200.00	
Sidwell Company	April 2026	$455.00	Cook Lease Publication
		$455.00	
Siemens Industry Inc	April 2026	$2,445.00	Life Safety Maintenance
	April 2026	$3,365.20	Life Safety Maintenance
		$5,810.20	
Sierra Systems Inc	April 2026	$1,120.00	IT Technical Staffing Services
	April 2026	$6,787.20	IT Technical Staffing Services
	April 2026	$400.00	Website Coordinator
		$8,307.20	
Sievert Electric	April 2026	$2,476.00	Hoist Inspections and Repair
		$2,476.00	
Stephen A. Laser & Associates	April 2026	$3,000.00	Psychological Assessments - Police
		$3,000.00	
Strand Associates Incorporated	April 2026	$69,399.42	Weathersfield Resurfacing
		$69,399.42	
Tariq Dandan	April 2026	$2,040.00	Rental Inspections
		$2,040.00	
Terrace Supply Company	April 2026	$159.41	Oxygen for Ambulances

	April 2026	$332.32	Oxygen for Ambulances
		$491.73	
The Cubala Group Psychological Services PC	April 2026	$3,000.00	Public Safety Psychologist Services
		$3,000.00	
The Molly Grisham Company	April 2026	$5,500.00	Volunteer Of The Year Speaker
		$5,500.00	
Thomas F Bradtke	April 2026	$800.00	Training
		$800.00	
Thomas Wisniewski	April 2026	$186.32	Mileage Reimbursement
		$186.32	
Thomson Weir LLC	April 2026	$8,500.00	Legislative Consulting Services
		$8,500.00	
Tomohisa Shirayama	April 2026	$60.00	Bike Locker Reimbursement
		$60.00	
Ultra Strobe Communications Inc	April 2026	$575.00	Upfit Labor
		$575.00	
Uno Mas Landscaping Inc	April 2026	$1,980.00	Landscape Plant Installation
	April 2026	$3,200.00	Landscape Plant Installation
	April 2026	$3,995.00	Landscape Plant Installation
		$9,175.00	
US Postal Service	April 2026	$3,000.00	VOS Postage
		$3,000.00	
Utility Transport Service	April 2026	$378.30	Gravel Delivery & Debris Hauling
	April 2026	$1,501.94	Gravel Delivery & Debris Hauling
		$1,880.24	
VACK Inc.	April 2026	$995.00	Ethernet Drops Install and Test
		$995.00	
Village of Hoffman Estates	April 2026	$46.09	Water Purchase
		$46.09	
Vital Records Holdings LLC	April 2026	$95.74	Monthly Shredding Services
		$95.74	
Water Services Company	April 2026	$550.00	Emergency Leak Detection Services
	April 2026	$6,567.00	Large Water Meter Testing and Repair Program
	April 2026	$21,960.00	Replacement Hydrant Meters Dual Check Valves
	April 2026	$38,696.51	Village Leak Survey to Reduce Water Loss
		$67,773.51	
Western Utility LLC	April 2026	$11,920.00	90 N Parking Garage Temp Sec Camera Connection
		$11,920.00	
William Rainey Harper College	April 2026	$4,400.00	Microsoft 365 Training

		$4,400.00	
William Wallrich	April 2026	$296.52	Mileage Reimbursement
		$296.52	
Xlogotech Inc	April 2026	$1,065.00	Thumb Drives for Photo and Video Evidence
		$1,065.00	
	GRAND TOTAL	**$6,713,061.63**	

VENDOR/PAYEE NAME	CHECK DATE	CHECK AMOUNT	DESCRIPTION
Accurate Translation Bureau	April 2026	$96.45	Language Services
Action Lock & Key Inc	April 2026	$698.00	Door Lock and Repairs
Ahead of Our Time Publishing Inc	April 2026	$500.00	Capitol Fax Subscription
Air One Equipment Inc	April 2026	$358.00	Cylinder Bumper
Alliance Risk Control Services LLC	April 2026	$9,354.53	Onsite Safety Consulting
AT&T	April 2026	$25.62	Telephone Service
	April 2026	$54.01	Telephone Service
	April 2026	$58.20	Telephone Service
	April 2026	$129.48	Telephone Service
	April 2026	$419.62	Telephone Service
		$686.93	
Bear Construction Company	April 2026	$46,076.13	Ballpark Mechanical Upgrades for Concessions
BLA Inc	April 2026	$5,440.00	CMP Condition Assessment and Rehab
BOS of Illinois, Inc	April 2026	$1,062,389.02	New Village Hall Furniture
CDWG LLC	April 2026	$100.04	HDMI Extender
Central Square Technologies LLC	April 2026	$3,220.92	Alarm Billing Outsource Services
Chastain & Associates LLC	April 2026	$11,760.00	90 North TIF District Project Management
	April 2026	$15,239.00	Supplemental Engineering Services
		$26,999.00	
Cheesey Inc.	April 2026	$15,500.00	Payment Balance For Jessie Mueller
Ciorba Group Inc	April 2026	$2,376.88	N Meacham Ped Bridge Preliminary Design Eng Svcs
	April 2026	$3,132.00	Professional Services
	April 2026	$299.65	Walnut Lane Lift Station Rehabilitation
		$5,808.53	
Citywide Elevator Inspection Services Inc	April 2026	$56.00	Elevator Inspection Services
CivicPlus, LLC	April 2026	$1,436.72	Municipal Code
Civiltech Engineering Inc	April 2026	$12,794.85	Eng Svcs Higgins Rd Bikepath
	April 2026	$11,904.19	Meacham and Golf Bike Path
	April 2026	$674.20	Small Cell Permit Assistance
		$25,373.24	
Commercial Tire Services Inc	April 2026	$353.64	Tire Purchases
Commonwealth Edison	April 2026	$21.73	Utility Service
	April 2026	$237.58	Utility Service
	April 2026	$3,111.11	Utility Service

VENDOR/PAYEE NAME	CHECK DATE	CHECK AMOUNT	DESCRIPTION
Commonwealth Edison	April 2026	$5,166.00	Utility Service
	April 2026	$43,760.74	Utility Service
		$52,297.16	
Compassion Funeral Services Inc	April 2026	$408.00	Transport of Deceased
Dariene Perry	April 2026	$2,250.00	Consultation Fees
DCG Roofing Solutions Inc	April 2026	$1,083.00	Airport Hangars Roof Repairs
	April 2026	$930.00	TVH Roof Repairs
		$2,013.00	
Deluca Visual Solutions Inc	April 2026	$85.00	Public Hearing
Divine Signs Inc	April 2026	$78.00	Workstation Nameplate 1000 Woodfield
DJ's Scuba Locker Inc	April 2026	$400.00	Dive Training
	April 2026	$630.00	Nitrox Training
		$1,030.00	
Dupage Water Commission	April 2026	$4,228.20	Water Purchase
DVM Insurance Agency	April 2026	$1,234.80	Pet Insurance - Employee Paid
ENGIE North America Inc	April 2026	$514.78	Utility Service
	April 2026	$593.26	Utility Service
		$1,108.04	
Garland/DBS Inc	April 2026	$4,259.00	PCA Roof Repair
H & H Electric Company	April 2026	$2,255.28	Traffic Signal/Opticom & Street Light Maintenance
	April 2026	$2,489.74	Traffic Signal/Opticom & Street Light Maintenance
		$4,745.02	
Huuso, PLLC	April 2026	$95.00	Biohazard Cleaning
Illinois Department of Agriculture	April 2026	$180.00	Pest Control License Application
Illinois State Police	April 2026	$540.00	Liquor License Background Processing
Industrial Systems	April 2026	$3,600.00	Liquid Calcium Chloride
Joseana Goncalves Quaresma Ripari	April 2026	$100.00	Zumba at The Barn
Joseph D Davito	April 2026	$3,388.75	Professional Services
JRK Services Inc	April 2026	$1,040.00	Chair Cleaning
Ken's Landscaping and Supply Inc.	April 2026	$4,920.00	Concrete Sealing at PCA
	April 2026	$5,350.00	Grinding Woodchips for Delivery to Homeowners
		$10,270.00	
Kimley-Horn & Associates Inc	April 2026	$17,067.43	Utility Undergrounding

VENDOR/PAYEE NAME	CHECK DATE	CHECK AMOUNT	DESCRIPTION
Laura Trujillo	April 2026	$90.00	Yoga at The Barn
LiftOff LLC	April 2026	$10,626.00	O365 Government Cloud Licenses Subscription
Major Case Assistance Team	April 2026	$441.00	MCAT Luncheon
Metiri Analytical Group Inc	April 2026	$1,445.00	IEPA Mandated Water Samples
	April 2026	$2,392.31	IEPA Mandated Water Samples
		$3,837.31	
Metropolitan Water Reclamation District	April 2026	$10,523.05	Sewer Service Charges
Michael Baker International Inc.	April 2026	$9,628.87	Walnut Lane Resurfacing
Motorola Solutions Inc	April 2026	$7,488.00	Device License Fee
Municipal Clerks of Illinois	April 2026	$100.00	Spring Seminar Registration
Muse Piano Workshop	April 2026	$110.00	Piano Tuning Services
New Tradition Funeral Services, LLC	April 2026	$400.00	Transport of Deceased
Nutoys Leisure Products	April 2026	$17,536.00	Benches & Trash Receptacles for Sculpture Path
Paddock Publications Inc	April 2026	$132.30	Legal Notice
	April 2026	$135.00	Legal Notices
		$267.30	
PARIC Holdings, Inc.	April 2026	$60,895.00	New Village Hall Furniture
Patson Inc	April 2026	$4,642.50	Purchase of Freightliner and Cummins Parts
Pulse Technology of Illinois Inc	April 2026	$514.92	MICR Toner Check Printer
	April 2026	$999.99	Printer Maintenance Service
		$1,514.91	
Quadient Inc	April 2026	$402.80	Postage Machine Maintenance
R Grossman and Associates Inc	April 2026	$2,700.00	Genetec Hardware Replacement Consulting Services
R H Donnelley	April 2026	$58.10	Advertising Charges
Ray O'Herron Company Inc	April 2026	$1,293.75	Body Armor
	April 2026	$39.98	ID Tags ID Placard
		$1,333.73	
Robert Mamrot	April 2026	$30.00	CDL Reimbursement
Schaumburg Park District	April 2026	$20,420.00	Developer Donation
Secretary of State	April 2026	$151.00	License Plates Renewal
Sierra Systems Inc	April 2026	$1,120.00	IT Technical Staffing Services
	April 2026	$2,590.00	IT Technical Staffing Services
	April 2026	$7,380.00	IT Technical Staffing Services

VENDOR/PAYEE NAME	CHECK DATE	CHECK AMOUNT	DESCRIPTION
Sierra Systems Inc	April 2026	$7,470.00	IT Technical Staffing Services
	April 2026	$300.00	Website Coordinator
	April 2026	$650.00	Website Coordinator
		$19,510.00	
Site Design Group Ltd	April 2026	$11,437.50	Public Improvements
State Industrial Products Corporation	April 2026	$1,989.12	Chemicals
State of Illinois	April 2026	$200.00	PCA Boiler Inspection
T-Mobile USA, Inc.	April 2026	$840.00	Mobile Broadband Services
Tallgrass Restoration LLC	April 2026	$5,210.00	Natural Area Restoration Work Lancer Creek
Thomas Engineering Group LLC	April 2026	$1,748.21	Prelim Design Meacham Streetscape
	April 2026	$8,059.02	Woodfield Rd Resurface Construction Engineer Svcs
		$9,807.23	
Thomas F Bradtke	April 2026	$500.00	Training
Thomson Weir LLC	April 2026	$25,500.00	Legislative Consulting Services
TKB Associates Inc	April 2026	$314.50	Laserfiche Licenses
Town Square Owners Association	April 2026	$1,737.55	Town Square Association Dues
TPI Building Code Consultants Inc	April 2026	$58,087.01	Inspections and Plan Review
Ultra Strobe Communications Inc	April 2026	$125.00	Regular Parts
	April 2026	$575.00	Upfit Labor
		$700.00	
Utility Transport Service	April 2026	$1,564.94	Gravel Delivery & Debris Hauling
	April 2026	$4,697.60	Gravel Delivery & Debris Hauling
	April 2026	$6,754.61	Gravel Delivery & Debris Hauling
		$13,017.15	
Verizon Wireless	April 2026	$6,522.71	Cellular Phone Services
	April 2026	$8,204.34	Mobile Broadband Services
	April 2026	$540.29	Water Meter Data Collection
		$15,267.34	
Village of Romeoville	April 2026	$650.00	RFA Command Officer Academy
Village of Roselle	April 2026	$86.20	Water Purchase
W S Darley & Company	April 2026	$1,089.14	In Line Foam Educators
	April 2026	$282.47	Rubber Hose
		$1,371.61	
William A Randolph, Inc	April 2026	$900,655.71	90 N Site and Parking Garage

VENDOR/PAYEE NAME	CHECK DATE	CHECK AMOUNT	DESCRIPTION
Williams Associates Architects Ltd	April 2026	$94,426.18	Design - New Police Facility
	April 2026	$102,896.66	Design - New Village Hall Facility
		$197,322.84	
Woodfield Lake Office Campus Associatio	April 2026	$766.00	Monthly Assessment
	GRAND TOTAL	**$2,732,629.88**	

VILLAGE OF SCHAUMBURG

AGENDA ITEM SUMMARY

Request from Ms. Allie Montecheze for One (1) Class K Liquor License for Target located at 1235 E. Higgins Road (New License).
04/14/26
Village Board

Presenter:

Lead Department: President and Board

Executive Summary:

Recommended Action:

ATTACHMENTS:

- Target 1235 E Higgins.pdf

VBM 04/14/2026

April 2, 2026

liquor license class "K" (New license)

Liquor Commissioner
Village of Schaumburg
101 Schaumburg Court
Schaumburg, IL 60193

Dear Liquor Commissioner,

Target Corporation is applying for a Class "K" Liquor license at our Schaumburg store, located at 1235 E Higgins Rd Schaumburg, IL, 60173. We are hoping to begin liquor sales at this location on June 1st, 2026. Our potential alcohol offering at this location is part of Target's ongoing efforts to deliver a convenient, one-stop shopping experience for our guests. We appreciate your consideration of our request and welcome your input.

Target takes the responsibility that comes with selling alcohol very seriously. All store executives and team members 18+ will obtain their BASSET Certification as required. Additionally, all team members 18+ and store executives are required to complete a comprehensive internal alcohol training program, with a focus on preventing underage sales, verifying valid identification, handling intoxicated guests, and cashier liability for illegal sales. Target's Point of Sale system has programmed controls to assist cashiers when processing alcohol transactions and our stores are staffed with Assets Protection team members to provide security and ensure a safe environment for guests and team members.

Target's alcohol business is established and growing. As a company, we have sold alcohol across the country in our stores since 1996, and we currently have nearly 1,643 stores that sell alcohol in 44 states. We have a history of responsible alcohol sales and have many processes in place to safely and securely sell beer, wine and spirits. We have sold alcohol in Illinois since 2002 and we currently have 93 stores with liquor licenses.

Target is a proud member of this community and is committed to continuing to be a good corporate citizen and community partner. Please feel free to contact me with concerns or suggestions regarding this request.

Sincerely,

Allie Montecheze
Licensing Analyst
Target Corporation
(612) 696-9922
Liquor.Licensing@target.com

VILLAGE OF SCHAUMBURG

AGENDA ITEM SUMMARY

Recommendation to Approve the Request from Schaumburg Township Elementary School Foundation for One (1) Class D One Day Liquor License for the Annual Golf Outing and to Waive the Fee
04/14/26
Village Board

Presenter:

Lead Department: President and Board

Executive Summary:

Recommended Action:

ATTACHMENTS:

- Schaumburg Township.pdf

VBM 04/14/26

Schaumburg Township Elementary School Foundation

Supporting Students Today – Preparing Students for Tomorrow

Liquor Commissioner
Village of Schaumburg
101 Schaumburg Court
Schaumburg, IL 60193

1 Day liquor license fee Waiver Request

"Class D" One Day Waied Fee

March 23, 2026

On Monday, June 8, 2026, the Schaumburg Township Elementary School Foundation will host its 29th Annual Golf Outing.

This signature event is our largest fundraising event of the year in which all proceeds go to support the Food Pantry and Crisis Fund for students from financially struggling households. We greatly appreciate your support.

We are pleased that numerous local businesses have chosen to sponsor this year's event. Some of them have expressed the desire to have an in-person presence at one of the golf holes, and one has indicated they would like to distribute complimentary beverage items to the golfers on the course. This would take place from 8:00 a.m to 2:30 p.m. at Schaumburg Golf Club, 401 N. Roselle Road, Schaumburg.

At this point, we anticipate the following companies may wish to participate in this opportunity:
Redstone Wealth Advisors, 111 E. Schaumburg Road, Schaumburg, 60194

On behalf of the Foundation, I am requesting a waiver of the fees for the one-day license for these supporters.

If you have any questions, please don't hesitate to contact Maribel Claudio at the Foundation office. She can be reached at 847.357.5141 or Maribelclaudio@sd54.org.

Thank you for your consideration.

Sincerely,

Andy Murray

Andy Murray
Golf Committee Chairman

524 E. Schaumburg Road, Schaumburg, IL 60194 (847) 357-5027

The Schaumburg Township Elementary School Foundation is a qualified 501c3 charitable organization chartered by the state of Illinois.
Tax ID #36-3591335.

VILLAGE OF SCHAUMBURG

AGENDA ITEM SUMMARY

Recommendation to Approve the Request from Chicago's Leading Edge for One (1) Class D One Day Liquor License for the Fundraiser and to Waive the Fee
04/14/26
Village Board

Presenter:

Lead Department: President and Board

Executive Summary:

Recommended Action:

ATTACHMENTS:

- Chicago's Leading Edge.pdf

VBM 04/14/26

1 Day Liquor License Fee Waiver Request

"Class D" One Day Waived Fee

Dear Village of Schaumburg Team,

I am writing on behalf of Chicago's Leading Edge, the Chicago chapter of Women in Aviation International, a registered 501(c)(3) nonprofit organization serving the Chicagoland community. We are in the process of planning our upcoming 1940s-themed Hangar Fundraiser, which will take place on June 13, 2026, at Schaumburg Regional Airport.

This event is one of our primary annual fundraisers, with proceeds directly supporting scholarships, aviation education initiatives, and outreach programs such as Girls in Aviation Day, which introduces young women to careers in aviation and aerospace.

We are respectfully requesting a waiver of the liquor permit fee for this event. As a nonprofit organization, we aim to allocate as much of our funding as possible toward our mission-driven programs, and a waiver would significantly support our ability to maximize the impact of this fundraiser.

We are committed to complying with all local regulations and requirements related to the permit and event operations. If any additional documentation is needed to support this request, we would be happy to provide it.

Thank you for your time and consideration. We greatly appreciate the Village of Schaumburg's continued support of community organizations and educational initiatives. Please feel free to contact me directly with any questions.

Warm regards,

Bailey Reiners

Bailey Reiners
President, Chicago's Leading Edge
Women in Aviation International
970-640-3885

VILLAGE OF SCHAUMBURG

AGENDA ITEM SUMMARY

Recommendation to Approve the Request from Schaumburg Business Association for One (1) Class D One Day Liquor License for the Golf Classic and to Waive the Fee
04/14/26
Village Board

Presenter:

Lead Department: President and Board

Executive Summary:

Recommended Action:

ATTACHMENTS:

- SBA June 17 2026.pdf

VBM 04/14/2026

1 Day Liquor License Fee Waiver Request

March 6, 2026

Village of Schaumburg
101 Schaumburg Court
Schaumburg, IL 60193-1899

"Class D" One Day Waived Fee

Dear Village of Schaumburg:

The Schaumburg Business Association is requesting a one-day liquor license fee waiver for Wednesday, June 17, 2026 for all Schaumburg Businesses participating.

Please contact Kayleigh with any questions at 847-413-1010 ex: 1011 or via email at kburnitz@schaumburgbusiness.com.

Thank you in advance for your assistance.

Sincerely,
Kayleigh Burnitz

VP of Events

VILLAGE OF SCHAUMBURG

AGENDA ITEM SUMMARY

Recommendation to Approve the Request from League of Women Voters of Palatine, Barrington & Schaumburg Areas to Hold a Raffle
04/14/26
Village Board

Presenter: Lisa Petersen
Lead Department: Finance

Executive Summary:

Request from League of Women Voters of Palatine, Barrington & Schaumburg Areas to hold a raffle on May 2, 2026 at Bella Napoli, located at 1540 N Roselle. Rd. Tickets will sell for 1 for $1 and 6 for $5. The total dollar amount of prizes awarded is a 50/50 split the pot. Their board voted unanimously to waive the fidelity bond requirement and requests the same from the Village Board.

Recommended Action:

The Village Manager recommends the Village Board approve the request from League of Women Voters of Palatine, Barrington & Schaumburg Areas to hold a raffle on May 2, 2026 at Bella Napoli, located at 1540 N Roselle. Rd. and to waive the fidelity bond requirement.

ATTACHMENTS:

- Raffle Application
- NFP
- Fidelity Bond

Raffle License Application

Village of Schaumburg / 101 Schaumburg Court / Schaumburg, IL 60193
Phone (847) 923-4537 / rafflelicenses@schaumburg.com

Please Print or Type

******Please note applications must be received at least 30 days in advance of the event or a $50 fee will be charged.******

Date of Application: 3/3/26

Organization Name: League of Women Voters of Palatine, Barrington & Schaumburg Areas

Type of Organization: Nonprofit
(i.e. - Charitable, Educational, Fraternal, Nonprofit, Religious, Veterans)

Applicant Name: Cindy Beres, Treasurer

Organization Address: PO Box 95184

Business Phone: 847-899-1554 Business Fax: _____

E-mail Address: treasurer@lwvpalatinearea.org

Purpose of raffle: raise funds to promote VOTE411.org

How many days will the chances be issued or sold? 1 Days

If the number of days is over 90, a variation to Chapter 117.31 of the Village of Schaumburg Municipal Code is required. Is the organization requesting a variance? Yes _____ No X

Please specify the time or determination of winning chances and the location or locations at which winning chances will be determined:
Dates (Start—End): 5/2/2026 one day only Raffle Event Date: 5/2/2026

Location(s): Bella Napoli, 1540 N Roselle Rd

Will the organization rent premises on which to determine the winning chance or chances in a raffle? Yes _____ No X

Please specify the area or areas within the Village in which raffle chances will be sold or issued:

at our Annual Member Meeting held at Bella Napoli

What is the price charged for each raffle chance issued or sold? $1.00

Is the price charged for each raffle chance issued or sold different based on the amount sold? Yes X No _____
If yes, please describe (i.e. - 1 for $5.00, 3 for $10.00):
$1.00 each or 6 for $5.00

If the price is over $5.00, a variation to Chapter 117.31 of the Village of Schaumburg Municipal Code is required. Is the organization requesting a variance? Yes _____ No X

What are the retail value(s) of each prize awarded by a licensee in a single raffle? Please list out each prize with the associated retail value: (i.e. – Cash Prize | 50/50 Raffle | Television $500)

50/50 Raffle

What is the total raffle award price(s) or retail value of merchandise? $less than 400

If the retail value is over $1,000 for any one prize, a variation to Chapter 117.31 of the Village of Schaumburg Municipal Code is required. Is the organization requesting a variance? Yes _____ No X

If the total awarded prices or retail value exceeds $25,000, a variation to Chapter 117.31 of the Village of Schaumburg Municipal Code is required. Is the organization requesting a variance? Yes _____ No X

The following are ineligible for any raffle license:

(1) Any person who has been convicted of a felony;

(2) Any person who is or has been a professional gambler or gambling promoter;

(3) Any person who is not of good moral character

(4) Any firm or corporation in which a person defined in division (1), (2) or (3) above has a proprietary, equitable or credit interest, or in which such a person is active or employed;

(5) Any organization in which a person defined in division (1) (2) or (3) above, is an officer, director, or employee, whether compensated or not;

(6) Any organization in which a person defined in division (1), (2) or (3) above is to participate in the management or operation of a raffle as defined in this subchapter.

Does any of the above ineligible cases for a raffle license apply to the organization? Yes _____ No X
If yes, please briefly describe:

Has the organization been in existence for a period of five years immediately before the application date?
Yes X_____ No _____

Does the organization have the proper paperwork on file with the State of Illinois to be considered not-for-profit?
(i.e. - Charitable, Educational, Fraternal, Nonprofit, Religious, Veterans) Yes X_____ No _____

Has the organization filed the required annual statements with the State of Illinois as a not-for-profit? Yes X_____ No _____

Does the organization have any outstanding amounts owed the State? Yes _____ No X_____

Are the entire net proceeds of the raffle exclusively devoted to the lawful purposes of the organization permitted to conduct that game? Yes X_____ No _____

Is any person receiving any remuneration or profit for participating in the management or operation of the raffle? Yes ___ No X___

What bona fide member of the sponsoring organization will participate in the management or operation of the raffle:

Name: Barb Mazursky Title: Fundraising Chair

Each organization licensed to conduct raffles and chances shall keep records of its gross receipts, expenses and net proceeds for each single gathering or occasion at which winning chances are determined. All deductions from gross receipts for each single gathering or occasion shall be documented with receipts or other records indicating the amount, a description of the purchased item or service or other reason for the deduction, and the recipient. The distribution of net proceeds shall be itemized as to payee, purpose, amount and date of payment.

Does the organization keep such records? Yes X_____ No _____

Gross receipts from the operation of raffles programs shall be segregated from other revenues of the organization, including bingo gross receipts, if bingo games are also conducted by the same nonprofit organization pursuant to license therefor issued by the Department of Revenue of the State of Illinois, and placed in a separate account. Each organization shall have separate records of its raffles. The person who accounts for gross receipts, expenses and net proceeds from the operation of raffles shall not be the same person who accounts for other revenues of the organization.

Does the organization have appropriate controls in place to segregate raffle revenues from other revenues generated from the organizations operations? Yes X_____ No _____

Are raffle proceeds placed in a separate account? Yes _____ No X_____

Is there appropriate segregation of duties that allows a different individual from the organization to account for raffle proceeds versus the individual that accounts for all other revenues of the organization? Yes X_____ No _____

Each organization licensed to conduct raffles shall report promptly after the conclusion of each raffle to its membership, and to the Village Board, its gross receipts, expenses and net proceeds from raffles, and the distribution of net proceeds itemized.

At what date will the organization have the raffle report prepared and mailed to the Village Board?

Date:3/22/2026

The manager of the organization shall give a fidelity bond in the sum of an amount determined by the licensing authority in favor of the organization conditioned upon his honesty in the performance of his duties. Terms of the bond shall provide that notice shall be given in writing to the licensing authority not less than 30 days prior to its cancellation. The Village Board may waive this bond requirement by including a waiver provision in the license issued to an organization, provided that a license containing such waiver provision shall be granted only by unanimous vote of the members of the licensed organization.

Does the organization have a fidelity bond(s) on individual management members? Yes _____ No X_____
If not, is the organization requesting the Village Board to waive the bond requirement? Yes X_____ No _____
Please include letter voting for the fidelity bond waiver.

(230 ILCS 15/5) (from Ch. 85, par. 2305)

Sec. 5. Raffles - manager - bond. All operation of and the conduct of raffles shall be under the supervision of a single raffles manager designated by the organization. The manager shall give a fidelity bond in an amount determined by the licensing authority in favor of the organization conditioned upon his honesty in the performance of his duties. Terms of the bond shall provide that notice shall be given in writing to the licensing authority not less than 30 days prior to its cancellation. The governing body of a local unit of government may waive this bond requirement by including a waiver provision in the license issued to an organization under this Act, provided that a license containing such waiver provision shall be granted only by unanimous vote of the members of the licensed organization.

I/We understand the issuance of a raffle license is conditional upon compliance with all Village Ordinances and State Law. I/We hereby authorize the Village of Schaumburg to make inquiries into our character, background, and any other inquiries as necessary based on the information contained in the application, in order to approve or deny this raffle license application. I have read this application and answered all questions fully, the information I/We have submitted in this application is complete and truthful to the best of my/our knowledge. In addition, I/We attest to the not-for-profit character of the prospective license organization.

Presiding officer name: Camille Basak Date: 3/3/2026

Secretary name: Leslie Parsons Date: 3/3/2026

FOR OFFICE USE ONLY

( ) Approved ( ) Not Approved

Signature: _____

Title: _____

Date: _____

Business Entity Search

Entity Information

Entity Name	LEAGUE OF WOMEN VOTERS OF ILLINOIS		
File Number	15368012	**Status**	ACTIVE
Entity Type	CORPORATION	**Type of Corp**	NOT-FOR-PROFIT
Incorporation Date (Domestic)	03-22-1920	**State**	ILLINOIS
Duration Date	PERPETUAL		
Annual Report Filing Date	02-24-2025	**Annual Report Year**	2025
Agent Information	REBECCA SIMON 332 S MICHIGAN AVE #634 CHICAGO ,IL 60604-4422	**Agent Change Date**	10-02-2023

LEAGUE OF WOMEN VOTERS®
OF THE PALATINE, BARRINGTON AND SCHAUMBURG AREAS

To: Village of Schaumburg

From: Cindy Beres, Treasurer

At the March 2, 2026 meeting of the League of Women Voters of Palatine, Barrington and Schaumburg Areas, the directors voted to apply for a raffle license with the Village of Schaumburg. The Board unanimously approved a motion to waive the fidelity bond requirement for the 50/50 raffle to be conducted May 2, 2026 at Bella Napoli during the Annual Meeting. This letter serves as confirmation of the boards' unanimous vote.

VILLAGE OF SCHAUMBURG

AGENDA ITEM SUMMARY

Recommendation to Approve the Request from the Schaumburg Business Association to Hold a Raffle
04/14/26
Village Board

Presenter: Lisa Petersen
Lead Department: Finance

Executive Summary:

Request from Schaumburg Business Association to hold a raffle on June 17, 2026 at Schaumburg Golf Club located at 401 Roselle Rd. Schaumburg IL, 60194. Tickets will sell for 20 for $20. The total dollar amount of prizes awarded is $1000. Their board voted unanimously to waive the fidelity bond requirement and requests the same from the Village Board.

Recommended Action:

The Village Manager recommends the Village Board approve the request from the Schaumburg Business Association to hold a raffle on June 17, 2026 at Schaumburg Golf Club located at 401 Roselle Rd. Schaumburg IL, 60194 and to waive the fidelity bond requirement.

ATTACHMENTS:

- Raffle Application
- Fidelity Bond Waiver
- NFP

Raffle License Application

Village of Schaumburg / 101 Schaumburg Court / Schaumburg, IL 60193
Phone (847) 923-4537 / rafflelicenses@schaumburg.com

Please Print or Type

******Please note applications must be received at least 30 days in advance of the event or a $50 fee will be charged.******

Date of Application: 4/2/2026

Organization Name: Schaumburg Business Association

Type of Organization: Charitable/ Nonprofit
(i.e. - Charitable, Educational, Fraternal, Nonprofit, Religious, Veterans)

Applicant Name: Kayleigh Burnitz

Organization Address: 1501 East Woodfield Road

Business Phone: 8474131010 Business Fax: _____

E-mail Address: kburnitz@schaumburgbusiness.com

Purpose of raffle: Raise Money for scholarship society

How many days will the chances be issued or sold? 1 Days

If the number of days is over 90, a variation to Chapter 117.31 of the Village of Schaumburg Municipal Code is required. Is the organization requesting a variance? Yes _____ No X

Please specify the time or determination of winning chances and the location or locations at which winning chances will be determined:
Dates (Start—End): 8am-5pm Raffle Event Date: June 17, 2026

Location(s): Schaumbrug Golf Club

Will the organization rent premises on which to determine the winning chance or chances in a raffle? Yes _____ No X

Please specify the area or areas within the Village in which raffle chances will be sold or issued:

Schaumburg Golf Club, 401 Roselle Rd, Schaumburg, IL 60194

What is the price charged for each raffle chance issued or sold? $20 for 20

Is the price charged for each raffle chance issued or sold different based on the amount sold? Yes _____ No X
If yes, please describe (i.e. - 1 for $5.00, 3 for $10.00):

_____

_____

If the price is over $5.00, a variation to Chapter 117.31 of the Village of Schaumburg Municipal Code is required. Is the organization requesting a variance? Yes X No _____

What are the retail value(s) of each prize awarded by a licensee in a single raffle? Please list out each prize with the associated retail value: (i.e. – Cash Prize | 50/50 Raffle | Television $500)

One - night complimentary stay in a hotel room for two One - night complimentary stay in a hotel

What is the total raffle award price(s) or retail value of merchandise? $1,000

If the retail value is over $1,000 for any one prize, a variation to Chapter 117.31 of the Village of Schaumburg Municipal Code is required. Is the organization requesting a variance? Yes _____ No X

If the total awarded prices or retail value exceeds $25,000, a variation to Chapter 117.31 of the Village of Schaumburg Municipal Code is required. Is the organization requesting a variance? Yes _____ No X

The following are ineligible for any raffle license:

(1) Any person who has been convicted of a felony;

(2) Any person who is or has been a professional gambler or gambling promoter;

(3) Any person who is not of good moral character

(4) Any firm or corporation in which a person defined in division (1), (2) or (3) above has a proprietary, equitable or credit interest, or in which such a person is active or employed;

(5) Any organization in which a person defined in division (1) (2) or (3) above, is an officer, director, or employee, whether compensated or not;

(6) Any organization in which a person defined in division (1), (2) or (3) above is to participate in the management or operation of a raffle as defined in this subchapter.

Does any of the above ineligible cases for a raffle license apply to the organization? Yes _____ No X
If yes, please briefly describe:

Has the organization been in existence for a period of five years immediately before the application date?
Yes X_____ No _____

Does the organization have the proper paperwork on file with the State of Illinois to be considered not-for-profit?
(i.e. - Charitable, Educational, Fraternal, Nonprofit, Religious, Veterans) Yes X_____ No _____

Has the organization filed the required annual statements with the State of Illinois as a not-for-profit? Yes X_____ No _____

Does the organization have any outstanding amounts owed the State? Yes _____ No X_____

Are the entire net proceeds of the raffle exclusively devoted to the lawful purposes of the organization permitted to conduct that game? Yes X_____ No _____

Is any person receiving any remuneration or profit for participating in the management or operation of the raffle? Yes ___ No X___

What bona fide member of the sponsoring organization will participate in the management or operation of the raffle:

Name: Kayleigh Burnitz Title: VP Of Events

Each organization licensed to conduct raffles and chances shall keep records of its gross receipts, expenses and net proceeds for each single gathering or occasion at which winning chances are determined. All deductions from gross receipts for each single gathering or occasion shall be documented with receipts or other records indicating the amount, a description of the purchased item or service or other reason for the deduction, and the recipient. The distribution of net proceeds shall be itemized as to payee, purpose, amount and date of payment.

Does the organization keep such records? Yes _____ No X_____

Gross receipts from the operation of raffles programs shall be segregated from other revenues of the organization, including bingo gross receipts, if bingo games are also conducted by the same nonprofit organization pursuant to license therefor issued by the Department of Revenue of the State of Illinois, and placed in a separate account. Each organization shall have separate records of its raffles. The person who accounts for gross receipts, expenses and net proceeds from the operation of raffles shall not be the same person who accounts for other revenues of the organization.

Does the organization have appropriate controls in place to segregate raffle revenues from other revenues generated from the organizations operations? Yes _X___ No _____

Are raffle proceeds placed in a separate account? Yes X_____ No _____

Is there appropriate segregation of duties that allows a different individual from the organization to account for raffle proceeds versus the individual that accounts for all other revenues of the organization? Yes _____ No X_____

Each organization licensed to conduct raffles shall report promptly after the conclusion of each raffle to its membership, and to the Village Board, its gross receipts, expenses and net proceeds from raffles, and the distribution of net proceeds itemized.

At what date will the organization have the raffle report prepared and mailed to the Village Board?

Date: 4/2/2026

The manager of the organization shall give a fidelity bond in the sum of an amount determined by the licensing authority in favor of the organization conditioned upon his honesty in the performance of his duties. Terms of the bond shall provide that notice shall be given in writing to the licensing authority not less than 30 days prior to its cancellation. The Village Board may waive this bond requirement by including a waiver provision in the license issued to an organization, provided that a license containing such waiver provision shall be granted only by unanimous vote of the members of the licensed organization.

Does the organization have a fidelity bond(s) on individual management members? Yes _____ No X_____
If not, is the organization requesting the Village Board to waive the bond requirement? Yes X_____ No _____
Please include letter voting for the fidelity bond waiver.

(230 ILCS 15/5) (from Ch. 85, par. 2305)

Sec. 5. Raffles - manager - bond. All operation of and the conduct of raffles shall be under the supervision of a single raffles manager designated by the organization. The manager shall give a fidelity bond in an amount determined by the licensing authority in favor of the organization conditioned upon his honesty in the performance of his duties. Terms of the bond shall provide that notice shall be given in writing to the licensing authority not less than 30 days prior to its cancellation. The governing body of a local unit of government may waive this bond requirement by including a waiver provision in the license issued to an organization under this Act, provided that a license containing such waiver provision shall be granted only by unanimous vote of the members of the licensed organization.

I/We understand the issuance of a raffle license is conditional upon compliance with all Village Ordinances and State Law. I/We hereby authorize the Village of Schaumburg to make inquiries into our character, background, and any other inquiries as necessary based on the information contained in the application, in order to approve or deny this raffle license application. I have read this application and answered all questions fully, the information I/We have submitted in this application is complete and truthful to the best of my/our knowledge. In addition, I/We attest to the not-for-profit character of the prospective license organization.

Presiding officer name: Kayleigh Burnitz Date: 4/2/2026

Secretary name: _____ Date: _____

FOR OFFICE USE ONLY

( ) Approved ( ) Not Approved

Signature: _____

Title: _____

Date: _____

April 2, 2026

Village of Schaumburg
101 Schaumburg Ct.
Schaumburg, IL 60193-1899

Dear Village of Schaumburg,

The Schaumburg Business Association board voted unanimously on Wednesday, January 15, 2026 to waive the fidelity bond requirement for the 2026 golf raffle application.

The meeting took place at the first Board meeting of the year taking place at 1501 E. Woodfield Rd, Schaumburg, IL.

Should you need any additional information, don't hesitate in reaching out.

Sincerely,

Kayleigh
Vice President of Events
Schaumburg Business Association

Business Entity Search

Entity Information

Entity Name	SCHAUMBURG BUSINESS ASSOCIATION		
File Number	61624066	**Status**	ACTIVE
Entity Type	CORPORATION	**Type of Corp**	NOT-FOR-PROFIT
Incorporation Date (Domestic)	05-15-2001	**State**	ILLINOIS
Duration Date	PERPETUAL		
Annual Report Filing Date	04-16-2024	**Annual Report Year**	2024
Agent Information	RAYMOND J. HORN III 1515 E WOODFIELD RD STE 250 SCHAUMBURG ,IL 60173-5431	**Agent Change Date**	12-07-2018

Services and More Information

Choose a tab below to view services available to this business and more information about this business.

VILLAGE OF SCHAUMBURG

AGENDA ITEM SUMMARY

Bike Month - June 2026
04/14/26
Village Board

Presenter:
Lead Department: President and Board

Executive Summary:

Recommended Action:

ATTACHMENTS:
- Bike Month June 2026.pdf

VILLAGE OF SCHAUMBURG

PROGRESS THROUGH THOUGHTFUL PLANNING

PROCLAMATION

WHEREAS, throughout the month of June, the residents of the Village of Schaumburg and its visitors will experience the joys of bicycling through the Business Bike Classic, Fahrrad Tour von Schaumburg, commuting to work, and by simply getting out and going for a ride; and

WHEREAS, the bicycle is an economical, healthy, convenient, and environmentally sound form of transportation and an excellent tool for recreation and enjoyment of the Village of Schaumburg's scenic beauty; and

WHEREAS, the Village of Schaumburg's 95-mile on and off-street bicycle network attracts bicyclists, providing economic health, transportation, tourism, and scenic benefits; and

WHEREAS, the Village of Schaumburg is recognized as a Bronze Level Bicycle Friendly Community by the League of American Bicyclists; and

WHEREAS, it is fitting and proper to recognize Bike Month.

NOW, THEREFORE, BE IT RESOLVED, that I, Tom Dailly, Village President of the Village of Schaumburg, do hereby proclaim the month of June 2026, as:

BIKE MONTH IN SCHAUMBURG

Please join the Village and the Bikeways Advisory Committee in celebrating this event by making the effort to bicycle more and by participating in bicycling events during June 2026.

BE IT FURTHER RESOLVED that all citizens are urged to join in and participate in Bike Month events.

VILLAGE OF SCHAUMBURG SCHAUMBURG ILLINOIS

IN WITNESS WHEREOF, I have hereunto set my hand and caused the Seal of the Village of Schaumburg to be affixed this 14th day of April 2026.

Tom Dailly

Tom Dailly
Village President

VILLAGE OF SCHAUMBURG

AGENDA ITEM SUMMARY

Recommendation to Approve the FY 26/27 Vehicle Replacement Plan
04/14/26
Village Board

Presenter: Brian Rafferty, Fleet Division Manager
Lead Department: Engineering and Public Works

Account(s):	Budget:	Expense Request:
6779010-7407	$5,931,806	$2,465,000 (New Vehicle Purchases); $3,466,806 (Rebudgeted from Prior FY)

The budget status for this request is: On Budget

Executive Summary:

The Fleet Division submits a Vehicle Replacement Plan annually. The principal determinants for unit replacements, as set forth in Village Policy Statement 7.40, are age and accumulated mileage or utilization. We currently utilize a point system which also considers service, reliability, condition, and maintenance and repair costs. The proposed Vehicle Replacement Plan maintains the integrity of the vehicle replacement fund while still providing the Village with the expected level of service.

Each department's need was considered when determining which make and model of vehicle to purchase. In some cases, an alternate vehicle or a non-like-kind replacement was identified which is outlined on each department's PowerPoint slides.

For Police, staff is proposing replacement of six units for the Patrol division. The estimated purchase price, including upfit parts, to replace these six units is $303,000.

For Fire, staff is proposing replacement of one ambulance, one fire engine, one fire truck, one Chevrolet Tahoe, and one Ford Explorer. The estimated purchase price to replace these five units is $4,227,000.

For Transportation, staff is proposing replacement of one speed trailer. The estimated purchase price to replace this unit is $23,000.

For EPW, staff is proposing replacement of thirteen units (seven vehicles and six pieces of equipment). Additionally, there are two additions to the fleet proposed for the Buildings Division. The estimated purchase price of these fifteen units is $1,812,000.

With EPW's Electric Vehicle Program, currently consisting of four EVs, frontline staff has provided positive feedback with the implementation of EVs into the fleet. Additionally, through grant funding, level 2 charging infrastructure has been set up, allowing for future EV growth. There are two EV

candidates for EPW in the replacement plan for FY 26/27.

The total costs for all 27 units amount to $6,365,000. 25 of the units, totaling $2,465,000, are expected to be paid out in FY 26/27. Detailed information of when expected payments will be made for all units is in the PowerPoint presentation. Delivery times, or when payment will need to be received by the vendor, may change. The fiscal years shown are our best assumptions based on the industry knowledge available to us at this time.

There are 14 units that are obligated expenses from previous fiscal year's and are still pending delivery. The total cost of these units are expected to be paid in FY 26/27 is $3,466,806 and will be budgeted appropriately as carryovers.

Staff met with Finance to confirm that the vehicle replacement fund would be able to accommodate the FY 26/27 proposed vehicle and equipment replacements as well as the obligated expenses from prior fiscal years.

Recommended Action:

The Village Manager recommends the Engineering and Public Works Committee recommend the Village Board approve the FY 26/27 Vehicle Replacement Plan in the amount of $2,465,000.

ATTACHMENTS:
- Equipment Rating
- Scorecards

EQUIPMENT RATING

1. Age
    a. Number of Points = Current year - model year
2. Use
    a. 1 point for every 10,000 miles
    b. 1 point for every 1,000 hours of use
3. Service
    a. 1 Point = Admin
    b. 3 Points = Support
    c. 5 Points = Front Line
4. Reliability = Number of times equipment was down for repair last year:
    a. 0 Points = 0 times
    b. 1 Point = 1 - 4 times
    c. 3 Points = 5 - 14 times
    d. 5 Points = 15+ times
5. Maintenance and Repair Lifetime repair costs are:
    a. 1 Point = Less than 25% of purchase price
    b. 3 Points = 25 to 75% of purchase price
    c. 5 Points = More than 75% of purchase price
6. Condition = This rating is established by the shop foreman:
    a. 0 Points = Excellent
    b. 1 Point = Good
    c. 3 Points = Fair
    d. 5 Points = Poor
7. Overall rating = The sum of the equipment rating factor points are:
    a. 0 - 17 points = Excellent
    b. 18 - 22 points = Good
    c. 23 - 27 points = Qualifies for Replacement
    d. 28 < = Needs Immediate Consideration

Fiscal Year 2026/27 Vehicle Replacement

VILLAGE OF SCHAUMBURG
PROGRESS THROUGH THOUGHTFUL PLANNING

- *49 units qualify for replacement in FY27*
- *24 units are being deferred and 25 units proposed along with two additions to the Fleet*

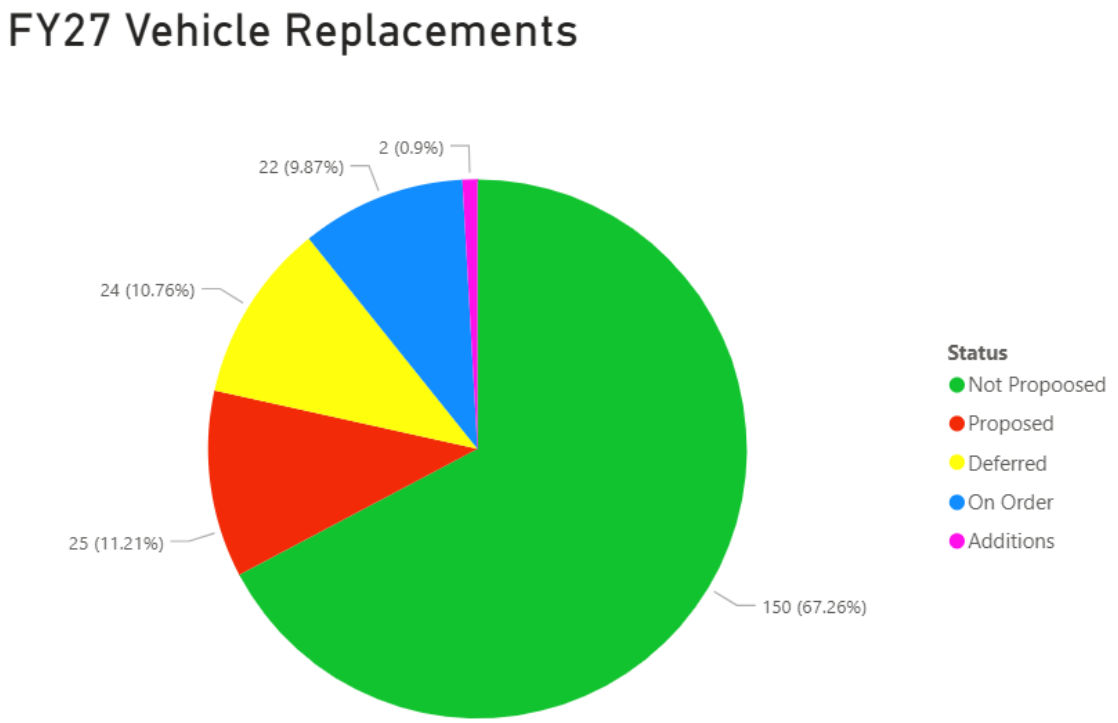

Fiscal Year 2026/27 Vehicle Replacement Proposal – (27 Units)

VILLAGE OF SCHAUMBURG
PROGRESS THROUGH THOUGHTFUL PLANNING

Police (6 Units): $303,000
Fire (5 Units): $4,227,000
Transportation (1 Unit): $23,000
EPW (15 Units): $1,812,000
New Replacement Purchases: $6,365,000
New Replacements Expected to be Paid in FY27: $2,465,000

14 Obligated Expenses to be Paid in FY27: $3,466,806

Budgeted Total to be Paid in FY27: $5,931,806

Obligated from FY23, FY25 & FY26
14 Units

VILLAGE OF SCHAUMBURG
PROGRESS THROUGH THOUGHTFUL PLANNING

UnitNo	FY Replacement	Description	Department	Division	FY27	FY28	FY29
10004	FY26	AERIAL TRUCK	EPW	BUILDING	$308,641		
10005	FY26	S&I TRUCK	EPW	LANDSCAPE	$320,000		
10009	FY25	S&I TRUCK	EPW	STREETS	$185,000		
10011	FY25	S&I TRUCK	EPW	SANITARY	$185,000		
10020	FY25	AERIAL TRUCK	EPW	BUILDING	$274,971		
10031	FY25	S&I TRUCK	EPW	LANDSCAPE	$185,000		
10032	FY25	S&I TRUCK	EPW	STREETS	$185,000		
10092	FY25	S&I TRUCK	EPW	LANDSCAPE	$185,000		
10094	FY25	S&I TRUCK	EPW	WATER	$185,000		
10095	FY25	S&I TRUCK	EPW	WATER	$185,000		
10097	FY25	S&I TRUCK	EPW	LANDSCAPE	$185,000		
10099	FY25	S&I TRUCK	EPW	STORM	$185,000		
10940	FY23	AMBULANCE	FIRE	FIRE	$411,474		
10955	FY26	AMBULANCE	FIRE	FIRE	$486,720		
Total					**$3,466,806**		

FY27 Expected Deliveries for 27 New Units

VILLAGE OF SCHAUMBURG
PROGRESS THROUGH THOUGHTFUL PLANNING

UnitNo	FY Replacement	Description	Department	Division	FY27	FY28	FY29
10014	FY27	TV Truck	EPW	SANITARY	$425,000		
10021	FY27	4X4 UTILITY	EPW	WATER	$45,000		
10034	FY27	TANDEM TRK W/PLOW	EPW	STREETS	$130,000	$300,000	
10054-Addition	FY27	F-150 PICKUP TRUCK	EPW	BUILDING	$62,000		
10079	FY27	4X4 PICKUP W/P	EPW	SANITARY	$93,000		
10083-Addition	FY27	F-250 PICKUP TRUCK	EPW	BUILDING	$78,000		
10085	FY27	4X4 DUMP W/ PLOW	EPW	STORM	$100,000		
10108	FY27	UTILITY INTERCEPTOR	POLICE	PATROL	$56,000		
10117	FY27	UTILITY INTERCEPTOR	POLICE	PATROL	$56,000		
10122	FY27	UTILITY INTERCEPTOR	POLICE	PATROL	$56,000		
10134	FY27	UTILITY INTERCEPTOR	POLICE	PATROL	$56,000		
10140	FY27	UTILITY INTERCEPTOR	POLICE	PATROL	$56,000		
10201	FY27	4 DOOR SEDAN	EPW	BUILDING	$65,500		
10233	FY27	MEDIUM SUV	EPW	BUILDING	$65,500		
10958	FY27	AMBULANCE	FIRE	FIRE FIGHT	$485,000		
10964	FY27	FIRE ENGINE 54	FIRE	FIRE FIGHT			$1,300,000
10965	FY27	FIRE TRUCK	FIRE	FIRE FIGHT			$2,300,000
10969	FY27	BATTALION	FIRE	FIRE FIGHT	$86,000		
10970	FY27	MEDIUM SUV	FIRE	FIRE FIGHT	$56,000		
19274	FY27	GPU PW/ BAY 1	EPW	WATER	$350,000		
19360	FY27	Speed Trailer	TRANS	TRANS	$23,000		
19372	FY27	ENCLOSED TRAILER	EPW	LANDSCAPE	$16,000		
19375	FY27	Speed Trailer	POLICE	PATROL	$23,000		
19381	FY27	ENCLOSED TRAILER	EPW	BUILDING	$16,000		
19382	FY27	GRAFFITI TRAILER	EPW	CUST. SERV	$30,000		
19386	FY27	TRAILER	EPW	BUILDING	$19,000		
19395	FY27	ENCLOSED TRAILER	EPW	WATER	$17,000		
Total					**$2,465,000**	**$300,000**	**$3,600,000**

Police – (6 Units): $303,000

VILLAGE OF SCHAUMBURG
PROGRESS THROUGH THOUGHTFUL PLANNING

- *Patrol - (6 Units): $303,000*

- *All Ford Interceptors will be upfit the same as the most recent upfits*

Unit:

10108

Department :	Fund:
POLICE	101
Division:	**Est. Price:**
PATROL	$56,000

Description:
UTILITY INTERCEPTOR

Replacement Type:
Like Kind

Unit's Primary Use:

Used for traffic enforcement, accident investigations, and street patrol.

Qualifies for Replacement

Make	Year	Service
FORD	2022	FRONT-LINE
Model	**Class**	**Count of RO's Last 365 Days**
INTERCEPTOR	5	6

Full Depreciation Date	Replacement Age (Months)	Vehicle Age (Months)
7/7/2025	36	42

Fuel Type	Replacement Meter	Current Meter
RGUNL	90000	73218

Original Purchase Price	Maintenance Cost (LTD)	Maintenance %
$42,901	$15,871	37%

Condition:
Normal squad car wear and tear, will meet or exceed mileage at replacement

Total Points	
25	
Points for Service	5
Points for Reliability	3
Points for Age	4
Points for Usage	7
Points for M&R	3
Points for Condition	3



Front View



Side View



Rear View



Under Body View

Unit:

10117

Department :	Fund:
POLICE	101
Division:	**Est. Price:**
PATROL	$56,000

Description:
UTILITY INTERCEPTOR

Replacement Type:
Like Kind

Unit's Primary Use:

Used for traffic enforcement, accident investigations, and street patrol.

Good

Make	Year	Service
FORD	2023	FRONT-LINE
Model	**Class**	**Count of RO's Last 365 Days**
INTERCEPTOR	5	5

Full Depreciation Date	Replacement Age (Months)	Vehicle Age (Months)
5/30/2026	36	32
Fuel Type	**Replacement Meter**	**Current Meter**
RGUNL	90000	64007
Original Purchase Price	**Maintenance Cost (LTD)**	**Maintenance %**
$53,631	$11,109	21%

Condition:

Normal squad car wear and tear. Averaging 24,864 miles per fiscal year. Will achieve one extra point for age and projected meter of 88,871 at time of replacement delivery, achieving total points of 24 points

Total Points
21
Points for Service
5
Points for Reliability
3
Points for Age
3
Points for Usage
6
Points for M&R
1
Points for Condition
3



Front View



Side View



Rear View



Interior View

Unit:	
10122	
Department : POLICE	Fund: 101
Division: PATROL	Est. Price: $56,000
Description: UTILITY INTERCEPTOR	
Replacement Type: Like Kind	
Unit's Primary Use: Used for traffic enforcement, accident investigations, and street patrol.	

Good

Make	Year	Service
FORD	2023	FRONT-LINE
Model	**Class**	**Count of RO's Last 365 Days**
INTERCEPTOR	5	8

Full Depreciation Date	Replacement Age (Months)	Vehicle Age (Months)
5/30/2026	36	33
Fuel Type	**Replacement Meter**	**Current Meter**
RGUNL	90000	75876
Original Purchase Price	**Maintenance Cost (LTD)**	**Maintenance %**
$53,834	$10,709	20%

Condition:

Normal squad car wear and tear. Averaging 25,333 miles per fiscal year. Will achieve one extra point for age and projected meter of 101,209 at time of replacement delivery, achieving total points of 26 points

Total Points
22
Points for Service: 5
Points for Reliability: 3
Points for Age: 3
Points for Usage: 7
Points for M&R: 1
Points for Condition: 3



Front View



Side View



Rear View



Under Body View

Unit:

10134

Department :	Fund:
POLICE	101
Division:	**Est. Price:**
PATROL	$56,000

Description:
UTILITY INTERCEPTOR

Replacement Type:
Like Kind

Unit's Primary Use:

Used for traffic enforcement, accident investigations, and street patrol.

Qualifies for Replacement

Make	Year	Service
FORD	2023	FRONT-LINE
Model	**Class**	**Count of RO's Last 365 Days**
INTERCEPTOR	5	6

Full Depreciation Date	Replacement Age (Months)	Vehicle Age (Months)
5/30/2026	36	32

Fuel Type	Replacement Meter	Current Meter
RGUNL	90000	62361

Original Purchase Price	Maintenance Cost (LTD)	Maintenance %
$51,287	$23,284	45%

Condition:
Normal squad car wear and tear, will meet or exceed mileage at replacement

Total Points
23
Points for Service
5
Points for Reliability
3
Points for Age
3
Points for Usage
6
Points for M&R
3
Points for Condition
3



Front View



Rear View



Under Body View



Interior View

Unit:

10140

Department :	Fund:
POLICE	101
Division:	**Est. Price:**
PATROL	$56,000

Description:
UTILITY INTERCEPTOR

Replacement Type:
Like Kind

Unit's Primary Use:

Used for traffic enforcement, accident investigations, and street patrol.

Qualifies for Replacement

Make	Year	Service
FORD	2023	FRONT-LINE
Model	**Class**	**Count of RO's Last 365 Days**
INTERCEPTOR	5	11

Full Depreciation Date	Replacement Age (Months)	Vehicle Age (Months)
5/30/2026	36	32

Fuel Type	Replacement Meter	Current Meter
RGUNL	90000	62283

Original Purchase Price	Maintenance Cost (LTD)	Maintenance %
$53,834	$19,953	37%

Condition:
Normal squad car wear and tear, will meet or exceed mileage at replacement

Total Points
23
Points for Service: 5
Points for Reliability: 3
Points for Age: 3
Points for Usage: 6
Points for M&R: 3
Points for Condition: 3



Front View



Side View



Rear View



Interior View

Unit:			
19375			
Department : POLICE	Fund: 101		
Division: PATROL	Est. Price: $23,000		
Description: SPEED TRAILER			
Replacement Type: Like Kind			
Unit's Primary Use: Used to collect speed data for code enforcement and speed control on main streets and residential areas.			

Good		
Make: MONITORSYS	Year: 2016	Service: SUPPORT
Model: PORDIGY22L	Class: 99	Count of RO's Last 365 Days: (Blank)
Full Depreciation Date: 2/1/2026	Replacement Age (Months): 120	Vehicle Age (Months): 119
Fuel Type:	Replacement Meter: (Blank)	Current Meter: 0
Original Purchase Price: $9,011	Maintenance Cost (LTD): $1,299	Maintenance %: 14%
Condition: Unit needs immediate consideration, unit is needing corroded electronic parts replaced and parts are unavailable. Point system does not account for lack of points for unit not having a meter		

Total Points
19
Points for Service: 3
Points for Reliability: 0
Points for Age: 10
Points for Usage: (Blank)
Points for M&R: 1
Points for Condition: 5



Front View



Corrosion



Corrosion



Corrosion

Fire – (5 Units): $4,227,000

VILLAGE OF SCHAUMBURG
PROGRESS THROUGH THOUGHTFUL PLANNING

- *Fire Fight – (4 Units): $4,171,000*
- *Fire Admin - (1 Unit): $56,000*

- *Budgeting for the 958 ambulance replacement in FY27 to pursue a demo unit*

Fire Apparatus/Ambulance Replacement Schedule

VILLAGE OF SCHAUMBURG
PROGRESS THROUGH THOUGHTFUL PLANNING

Engines/Rescue Squads - 12-Year Replacement Cycle

Unit	Year	Use	25/26	26/27	27/28	28/29	29/30	30/31	31/32	32/33	33/34	34/35
10941	2006	Front Line						X		X		
10942	2021	Front Line						X		X		
10943	2018	Front Line			X		X					
10947	2008	Reserve	No replacement funds for the Reserve									
10963	2012	Front Line					X		X			
10964	2017	Front Line		X		X						
10967	2023	Front Line							X		X	

X	Order
X	Delivery

Re-Life in FY25

Ladder Trucks - 10-Year Replacement Cycle

Unit	Year	Use	25/26	26/27	27/28	28/29	29/30	30/31	31/32	32/33	33/34	34/35
10935	2012	Reserve	No Replacement Funds for the Reserve									
10965	2016	Front Line		X		X						
10968	2024	Front Line	X						X			X

Ambulances - 8-Year Replacement Cycle

Unit	Year	Use	25/26	26/27	27/28	28/29	29/30	30/31	31/32	32/33	33/34	34/35
10940	2015	Reserve	No replacement funds for the Reserve									
10955	2019	Front Line	X	X						X		
10957	2022	Front Line						X				
10958	2019	Front Line		X	X						X	
10966	2024	Front Line						X				

Unit:

10958

Department :	Fund:
FIRE	101-FIRE
Division:	**Est. Price:**
FIRE FIGHT	$485,000

Description:
AMBULANCE 52

Replacement Type:
F-550 Chassis

Unit's Primary Use:
Used for patient transportation and emergency vehicle operations.

Needs Immediate Consideration

Make	Year	Service
FREIGHTLIN	2019	FRONT-LINE
Model	**Class**	**Count of RO's Last 365 Days**
M2106V	51	2

Full Depreciation Date	Replacement Age (Months)	Vehicle Age (Months)
6/1/2027	96	79
Fuel Type	**Replacement Meter**	**Current Meter**
DIESL	10000	8146
Original Purchase Price	**Maintenance Cost (LTD)**	**Maintenance %**
$295,302	$99,311	34%

Condition:
Corrosion on body, and will exceed usage at replacement

Total Points
29
Points for Service
5
Points for Reliability
1
Points for Age
7
Points for Usage
8
Points for M&R
3
Points for Condition
5



Front View



Side View



Rear View



Corrosion

Unit:

10964

Department :	Fund:
FIRE	101-FIRE
Division:	**Est. Price:**
FIRE FIGHT	$1,300,000

Description:
FIRE ENGINE 54

Replacement Type:
Like Kind

Unit's Primary Use:

Used as emergency response vehicle for any fire related emergency calls. Serves as a water pump for location and supplies the ladder truck with water.

Needs Immediate Consideration

Make	Year	Service
PIERCE	2017	FRONT-LINE
Model	**Class**	**Count of RO's Last 365 Days**
IMPELXM	53	8

Full Depreciation Date	Replacement Age (Months)	Vehicle Age (Months)
11/1/2029	144	98
Fuel Type	**Replacement Meter**	**Current Meter**
DIESL	6000	7102
Original Purchase Price	**Maintenance Cost (LTD)**	**Maintenance %**
$597,925	$165,798	28%

Condition:

Corrosion on frame, already exceeded replacement usage, 3 year build time at time of order for new one

Total Points
30
Points for Service: 5
Points for Reliability: 3
Points for Age: 9
Points for Usage: 7
Points for M&R: 3
Points for Condition: 3



Front View



Rear View



Side View



Suspension

Unit:

10965

Department :	Fund:
FIRE	101-FIRE
Division:	**Est. Price:**
FIRE FIGHT	$2,300,000

Description:
100' TOWER LADDER 51

Replacement Type:
Like Kind

Unit's Primary Use:

Used as heavy rescue unit with ladder for rescue and fire extinguishing.

Qualifies for Replacement

Make	Year	Service
PIERCE	2016	FRONT-LINE
Model	**Class**	**Count of RO's Last 365 Days**
VELOCITY	54	5

Full Depreciation Date	Replacement Age (Months)	Vehicle Age (Months)
1/1/2027	120	108
Fuel Type	**Replacement Meter**	**Current Meter**
DIESL	6000	2370
Original Purchase Price	**Maintenance Cost (LTD)**	**Maintenance %**
$1,077,754	$283,114	26%

Condition:

Start of frame corrosion, 4 year build time at time of order for new one

Total Points	
26	
Points for Service	5
Points for Reliability	3
Points for Age	10
Points for Usage	2
Points for M&R	3
Points for Condition	3



Front View



Side View



Rear View



Corrosion

Unit:

10969

Department :	Fund:
FIRE	101-FIRE
Division:	**Est. Price:**
FIRE FIGHT	$86,000

Description:
4 WHEEL DRIVE SUV

Replacement Type:
Like Kind

Unit's Primary Use:
Utilized for emergency response.

Needs Immediate Consideration

Make	Year	Service
CHEVROLET	2017	SUPPORT
Model	**Class**	**Count of RO's Last 365 Days**
TAHOE	41	8

Full Depreciation Date	Replacement Age (Months)	Vehicle Age (Months)
4/1/2024	84	106
Fuel Type	**Replacement Meter**	**Current Meter**
RGUNL	90000	81588
Original Purchase Price	**Maintenance Cost (LTD)**	**Maintenance %**
$39,952	$43,651	109%

Condition:
Minor body corrosion and normal wear and tear

Total Points
31
Points for Service
3
Points for Reliability
3
Points for Age
9
Points for Usage
8
Points for M&R
5
Points for Condition
3



Front View



Side View



Rear View



Interior View

Unit:

10970

Department :	Fund:
FIRE	101-FIRE
Division:	**Est. Price:**
FIRE ADMIN	$56,000

Description:
UTILITY INTERCEPTOR

Replacement Type:
Like Kind

Unit's Primary Use:

Used as a take home vehicle for the Deputy Chief for emergency response to Fire Operations.

Qualifies for Replacement

Make	Year	Service
FORD	2020	FRONT-LINE
Model	**Class**	**Count of RO's Last 365 Days**
EXPLORER	40	1
Full Depreciation Date	**Replacement Age (Months)**	**Vehicle Age (Months)**
(Blank)	84	62
Fuel Type	**Replacement Meter**	**Current Meter**
RGUNL	90000	87308
Original Purchase Price	**Maintenance Cost (LTD)**	**Maintenance %**
$38,267	$14,188	37%

Condition:
Normal usage wear

Total Points	24
Points for Service	5
Points for Reliability	1
Points for Age	6
Points for Usage	8
Points for M&R	3
Points for Condition	1



Front View



Side View



Rear View



Interior View

Transportation – (1 Unit): $23,000

VILLAGE OF SCHAUMBURG
PROGRESS THROUGH THOUGHTFUL PLANNING

- *Transportation – (1 Unit) - $23,000*

Unit:

19360

Department :	Fund:
TRANSP	101
Division:	Est. Price:
TRANSPORT.	$23,000

Description:

SPEED TRAILER

Replacement Type:

Like Kind

Unit's Primary Use:

Used to collect speed data for code enforcement and speed control on main streets and residential areas.

Good

Make	Year	Service
MONITORSYS	2016	SUPPORT
Model	**Class**	**Count of RO's Last 365 Days**
PORDIGY22L	99	2
Full Depreciation Date	**Replacement Age (Months)**	**Vehicle Age (Months)**
2/1/2026	120	119
Fuel Type	**Replacement Meter**	**Current Meter**
	(Blank)	0
Original Purchase Price	**Maintenance Cost (LTD)**	**Maintenance %**
$9,011	$1,911	21%

Condition:

Unit needs immediate consideration, unit is needing corroded electronic parts replaced and parts are unavailable. Point system does not account for lack of points for unit not having a meter

Total Points
20
Points for Service
3
Points for Reliability
1
Points for Age
10
Points for Usage
(Blank)
Points for M&R
1
Points for Condition
5



Front View



Corrosion



Display Board Issues



Corrosion

EPW – (15 Units): $1,812,000

VILLAGE OF SCHAUMBURG
PROGRESS THROUGH THOUGHTFUL PLANNING

- *Field Services – (3 Units): $476,000*
- *Utility Services – (6 Units): $1,030,000*
- *Support Services – (6 Units): $306,000*

- *Units 201, currently a Ford Focus, & 233, currently a Ford Explorer, are candidates for EVs*
- *Unit 201 to be renamed as 50, and 233 to be renamed as 53*
- *Unit 21, currently a Ford Explorer, will be proposed as a pickup truck*
- *Unit 34, currently a standard dump truck, will be proposed with a hook lift system*
- *Unit 79, currently an F-250, will be proposed as an F-350 with a service body*
- *Two additional vehicle are proposed for the Buildings division*
  - *F-250 Pickup Truck*
  - *F-150 Pickup Truck*

Electric Vehicle Program at EPW

VILLAGE OF SCHAUMBURG
PROGRESS THROUGH THOUGHTFUL PLANNING

- *EPW has four EV's (7, 23, 51, & 84) in operation, with one more, Truck 86, at the upfitter waiting to be delivered/put in service.*
- *Driver feedback continues to be positive.*

EV - Info as of 1/24/2026											
Unit	Description	InServDate	Mileage	RO Count	Shop Parts	Shop Labor Hours	Shop Labor Cost	Cont Labor Cost	Fuel	Total Cost of Ownership	Downtime Hours
10007	Lightning	11/21/2024	10,623	3	$ 29.48	2	$ 230.00	$ 40.00	$ -	$ 299.48	4.35
10012	F-250	3/28/2025	11,071	1	$ 118.31	1.75	$ 94.21		$5,115.17	$ 5,327.69	67
10023	Lightning	10/28/2023	15,854	3	$ -	1	$ 115.00	$ 40.00	$ -	$ 155.00	14.27
10051	E-Transit	10/28/2023	8,535	3	$ 65.46	0.5	$ 57.50	$ 40.00	$ -	$ 162.96	27.77
10067	F-250	9/20/2023	6,802	4	$ 343.66	8	$ 941.94	$ -	$2,018.26	$ 3,303.86	434.83
10081	F-350	5/30/2024	9,530	1	$ -	0	$ -	$ 101.38	$4,392.33	$ 4,493.71	8.45
10084	E-Transit	10/28/2023	9,725	2	$ -	0	$ -	$ 40.00	$ -	$ 40.00	9.95
10086	Lightning	**PENDING - Vehicle is currently at upfitter pending delivery and being put in service**									
10087		11/20/2023	17,368	4	$1,632.95	3.75	$ 431.25	$ 990.77	$7,829.63	$10,884.60	114.7

Unit:

10014

Department :	Fund:
EPW	572
Division:	Est. Price:
SANITARY	$425,000

Description:

SEWER TV/SEAL TRK

Replacement Type:

E-450 Cargo Van

Unit's Primary Use:

Used to evaluate and maintain the condition of the Village's sanitary sewer system, identifying structural defects, blockages, and maintenance needs, supporting regulatory compliance, system reliability, and proactive asset management

Good

Make	Year	Service
FORD	2016	FRONT-LINE
Model	Class	Count of RO's Last 365 Days
F-550	25	2

Full Depreciation Date	Replacement Age (Months)	Vehicle Age (Months)
2/2/2024	96	120

Fuel Type	Replacement Meter	Current Meter
RGUNL	60000	21251

Original Purchase Price	Maintenance Cost (LTD)	Maintenance %
$394,929	$88,027	22%

Condition:

Chassis is good, but the equipment is out of date. Connectivity issues and camera goes in and out while televising. Will achieve one extra point for age at time of unit's replacement, achieving a total of 23 points.

Total Points	22
Points for Service	5
Points for Reliability	1
Points for Age	10
Points for Usage	2
Points for M&R	1
Points for Condition	3



Front View



Normal Wear



Suspension



Under Body View

Unit:	
10021	
Department :	Fund:
EPW	572
Division:	Est. Price:
WATER	$45,000
Description:	
4X4 UTILITY	
Replacement Type:	
Pickup Truck	
Unit's Primary Use:	
Assigned to Utilities Superintendent. Used by staff for training, water samples, etc.	

Qualifies for Replacement

Make	Year	Service
FORD	2015	ADMIN
Model	**Class**	**Count of RO's Last 365 Days**
EXPLORER	40	1

Full Depreciation Date	Replacement Age (Months)	Vehicle Age (Months)
1/1/2022	84	132

Fuel Type	Replacement Meter	Current Meter
RGUNL	90000	67223

Original Purchase Price	Maintenance Cost (LTD)	Maintenance %
$26,272	$22,008	84%

Condition:

Normal usage wear, corrosion, and hail dents

Total Points
25
Points for Service
1
Points for Reliability
1
Points for Age
11
Points for Usage
6
Points for M&R
5
Points for Condition
1



Rear View



Hood Corrosion



Suspension



Hail Dents

Unit 21 Pickup Truck Justification
Same Pricing as a Like-Kind Replacement

VILLAGE OF SCHAUMBURG
PROGRESS THROUGH THOUGHTFUL PLANNING

- *Enhanced Operational Utility*
  - *Transporting tools, barricades, small equipment, cold patch, cones, and material without impacting cab space*
  - *Haul light trailers, portable message boards, and jobsite equipment*
- *Shared Vehicle Efficiency*
  - *A pickup truck can be better utilized among seasonal employees & FTEs. The open bed and durable interior are better suited for hauling than current SUV*

Unit:

10034

Department :	Fund:
EPW	101
Division:	**Est. Price:**
STREETS	$430,000

Description:
TANDEM TRK W/PLOW

Replacement Type:
Like Kind w/Hook Lift System

Unit's Primary Use:

Used for repair and maintenance of streets, hauling asphalt and millings, and is a front line snow and ice truck.

Qualifies for Replacement

Make	Year	Service
FREIGHTLIN	2017	FRONT-LINE
Model	**Class**	**Count of RO's Last 365 Days**
108SD	50	11

Full Depreciation Date	Replacement Age (Months)	Vehicle Age (Months)
11/1/2026	120	110

Fuel Type	Replacement Meter	Current Meter
DIESL	8000	4366

Original Purchase Price	Maintenance Cost (LTD)	Maintenance %
$211,579	$147,428	70%

Condition:

Grates rotting in vbox, and plow has wear. Two years will need full exhaust $16k

Total Points	27
Points for Service	5
Points for Reliability	3
Points for Age	9
Points for Usage	4
Points for M&R	3
Points for Condition	3



Side View



V-Box Corrosion



Plow Wear



Rotting Grates

Unit 34 Hook-Lift System Justification
$40,000 Non-Like-Kind Increase

VILLAGE OF SCHAUMBURG
PROGRESS THROUGH THOUGHTFUL PLANNING

- *Versatility*
  - *Swapping bodies with ease by a single person (can be utilized for paving, hauling, and winter operations all on the same shift)*
- *Operational Flexibility in Winter Operations*
  - *Current slide-in V-boxes are installed in October & shuts down the asphalt operation. A hook-lift truck can drop the V-Box and switch back to the dump body when weather is appropriate to continue alternative operations*

Unit:	
10079	
Department : EPW	Fund: 572
Division: SANITARY	Est. Price: $93,000
Description: 4X4 PICKUP W/P	
Replacement Type: F-350 w/Service Body	
Unit's Primary Use: Used for repairs, snow and ice, and other various tasks.	

Qualifies for Replacement

Make	Year	Service
FORD	2016	FRONT-LINE
Model	**Class**	**Count of RO's Last 365 Days**
F250	43	3

Full Depreciation Date	Replacement Age (Months)	Vehicle Age (Months)
2/1/2022	72	119

Fuel Type	Replacement Meter	Current Meter
RGUNL	72000	33312

Original Purchase Price	Maintenance Cost (LTD)	Maintenance %
$42,312	$18,684	44%

Condition:

Body and tailgate rotting

Total Points
27
Points for Service: 5
Points for Reliability: 1
Points for Age: 10
Points for Usage: 3
Points for M&R: 3
Points for Condition: 5



Front View



Rotting Tailgate



Body Rot



Wheel Well Corrosion

Unit 79 F-350 & Service Body Justification
$15,000 Non-Like-Kind Increase

VILLAGE OF SCHAUMBURG
PROGRESS THROUGH THOUGHTFUL PLANNING

- *Increased Payload Capacity for Heavy Equipment*
  - *Transport pumps, valves, & confined space entry equipment without exceeding axle or suspension limits*
- *Service Body for Secure & Organized Storage*
  - *Organized/compartmentalized storage of tools, PPE, confined space entry gear, spare fittings, & emergency response supplies*

Unit:

10085

Department :	Fund:
EPW	572
Division:	**Est. Price:**
STORM	$100,000

Description:
4X4 DUMP W/ PLOW

Replacement Type:
Like Kind w/Stainless bed

Unit's Primary Use:

Used primarily during repairs to bring material to and from jobsites and also to load with debris during Storm events.

Qualifies for Replacement

Make	Year	Service
FORD	2016	FRONT-LINE
Model	**Class**	**Count of RO's Last 365 Days**
F450	44	2

Full Depreciation Date	Replacement Age (Months)	Vehicle Age (Months)
4/1/2022	72	117

Fuel Type	Replacement Meter	Current Meter
RGUNL	72000	47732

Original Purchase Price	Maintenance Cost (LTD)	Maintenance %
$59,153	$36,905	62%

Condition:
Body corrosion

Total Points	26
Points for Service	5
Points for Reliability	1
Points for Age	10
Points for Usage	4
Points for M&R	3
Points for Condition	3



Front View



Side View



Bed View



Suspension

Unit:			
10201			
Department : EPW	Fund: 101		
Division: BUILDING	Est. Price: $65,500		
Description: 4 DOOR SEDAN			
Replacement Type: EV Candidate			
Unit's Primary Use: Vehicle is used to travel to several different Village buildings to address CSRs.			

Good		
Make: FORD	Year: 2016	Service: FRONT-LINE
Model: FOCUS	Class: 4	Count of RO's Last 365 Days: 1
Full Depreciation Date: 9/1/2023	Replacement Age (Months): 84	Vehicle Age (Months): 113
Fuel Type: RGUNL	Replacement Meter: 90000	Current Meter: 20676
Original Purchase Price: $15,727	Maintenance Cost (LTD): $4,749	Maintenance %: 30%

Condition:

Normal wear and tear for a vehicle of this age. Unit will achieve one additional point for age by the time its replacement is delivered, achieving a total of 23 points.

Total Points
22
Points for Service: 5
Points for Reliability: 1
Points for Age: 10
Points for Usage: 2
Points for M&R: 3
Points for Condition: 1



Front View



Side View

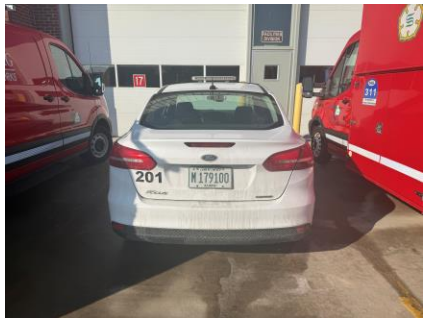

Rear View



Wear and tear

Unit 201 Transit Justification
$35,270 Non-Like-Kind Increase

VILLAGE OF SCHAUMBURG
PROGRESS THROUGH THOUGHTFUL PLANNING

- *The Transit vehicle is the ideal vehicle for the Facilities division employees. This vehicle can store all material needed to complete work daily. Saving driving time back to the shop and assistance from other personnel.*
- *201 is not functional for Facility employee to work without assistance daily. Multiple trips are needed back to inventory control or a hardware store for material needed. Or a delivery from another employee when able.*

Unit:

10233

Department :	Fund:
EPW	101
Division:	Est. Price:
BUILDING	$65,500

Description:

MEDIUM SUV

Replacement Type:

EV Candidate

Unit's Primary Use:

Used to respond to CSR's and completing PM at all village buildings.

Needs Immediate Consideration

Make	Year	Service
FORD	2013	ADMIN
Model	**Class**	**Count of RO's Last 365 Days**
EXPLORER	40	2
Full Depreciation Date	**Replacement Age (Months)**	**Vehicle Age (Months)**
12/1/2019	84	157
Fuel Type	**Replacement Meter**	**Current Meter**
RGUNL	90000	65869
Original Purchase Price	**Maintenance Cost (LTD)**	**Maintenance %**
$25,913	$27,075	104%

Condition:

Rust on tailgate and corrosion on hood

Total Points
29
Points for Service
1
Points for Reliability
1
Points for Age
13
Points for Usage
6
Points for M&R
5
Points for Condition
3



Front View



Side View



Hood Corrosion



Tailgate Rust

Unit 233 Transit Justification
$22,500 Non-Like-Kind Increase

VILLAGE OF SCHAUMBURG
PROGRESS THROUGH THOUGHTFUL PLANNING

- *The Transit vehicle is the ideal vehicle for the Facilities division employees. This vehicle can store all material needed to complete work daily. Saving driving time back to the shop and assistance from other personnel.*
- *233 is not functional for Facility employee to work without assistance daily. Multiple trips are needed back to inventory control or a hardware store for material needed. Or a delivery from another employee when able. This vehicle was originally assigned as a Supervisor vehicle for transportation purposes only.*

Unit:

19274

Department :	Fund:
EPW	572
Division:	**Est. Price:**
WATER	$350,000

Description:
GPU PW/ BAY 1

Replacement Type:
Like Kind

Unit's Primary Use:

Provides reliable backup power for critical Village water infrastructure, including the Police Department, Plum Grove and Odlum Water Stations, and the DuPage Water Commission connection if necessary. This unit is essential to maintaining uninterrupted water operations and emergency response capabilities during power outages and other critical events.

Needs Immediate Consideration

Make	Year	Service
ENERGY DYN	1994	SUPPORT
Model	**Class**	**Count of RO's Last 365 Days**
534C	83	1

Full Depreciation Date	Replacement Age (Months)	Vehicle Age (Months)
11/1/2006	144	374
Fuel Type	**Replacement Meter**	**Current Meter**
DIESL	(Blank)	182
Original Purchase Price	**Maintenance Cost (LTD)**	**Maintenance %**
$60,000	$13,489	22%

Condition:

1994 model year, runs well stations, corrosion on body, parts becoming scarce

Total Points
42
Points for Service: 3
Points for Reliability: 1
Points for Age: 32
Points for Usage: 0
Points for M&R: 1
Points for Condition: 5



Front View



Under Chassis View



Side View

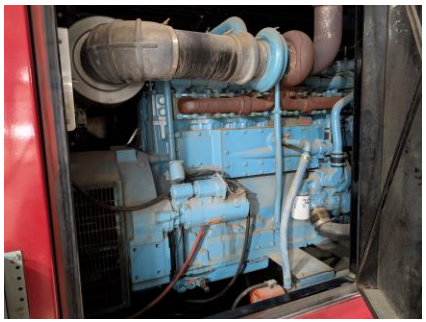

Engine Compartment View

Unit:

19372

Needs Immediate Consideration

Total Points
37

Department :	Fund:
EPW	101

Division:	Est. Price:
LANDSCAPE	$16,000

Description:

ENCLOSED TRAILER

Replacement Type:

Like Kind

Unit's Primary Use:

This trailer is used for the storage and installation of snow fence during snow fence installation on parkways and medians, hauling of holiday decor, and Septemberfest.

Make	Year	Service
WELLSCARGO	2000	SUPPORT

Model	Class	Count of RO's Last 365 Days
EW1622	85	(Blank)

Full Depreciation Date	Replacement Age (Months)	Vehicle Age (Months)
9/1/2010	120	305

Fuel Type	Replacement Meter	Current Meter
	(Blank)	0

Original Purchase Price	Maintenance Cost (LTD)	Maintenance %
$6,175	$8,300	134%

Condition:

2000 model year, body color faded, under body corrosion

Points for Service	Points for Reliability	Points for Age	Points for Usage	Points for M&R	Points for Condition
3	0	26	(Blank)	5	3



Rear & Side View



Corrosion



Front Frame



Wheels & Fender

Unit:

19381

Needs Immediate Consideration

Total Points
34

Department :	Fund:
EPW	101

Division:	Est. Price:
BUILDING	$16,000

Description:

ENCLOSED TRAILER

Replacement Type:

Like Kind

Unit's Primary Use:

Used to house electrical supplies for Septemberfest. This enclosed trailer is also utilized to assist with streelight pole knockdowns, housing some streetlighting material as well.

Make	Year	Service
WELLSCARGO	2001	SUPPORT

Model	Class	Count of RO's Last 365 Days
EW1622	85	(Blank)

Full Depreciation Date	Replacement Age (Months)	Vehicle Age (Months)
4/1/2011	120	298

Fuel Type	Replacement Meter	Current Meter
	(Blank)	0

Original Purchase Price	Maintenance Cost (LTD)	Maintenance %
$6,175	$8,826	143%

Condition:

Hail dents and corosion

Points for Service	Points for Reliability	Points for Age	Points for Usage	Points for M&R	Points for Condition
3	0	25	(Blank)	5	1



Rear & Side View



Hail Dents



Corrosion



Front Frame

Unit:

19382

Department :	Fund:
EPW	101
Division:	**Est. Price:**
CUST. SERV	$30,000

Description:

GRAFFITI TRAILER

Replacement Type:

Like Kind

Unit's Primary Use:

The graffiti trailer is used to remove graffiti and beautify concrete areas that are unclean and weathered. This trailer has supply tanks, cleaning supplies, hoses, attachments, and a pressure washer that removes debris and graffiti with high pressure hot water.

Needs Immediate Consideration

Make	Year	Service
WELLSCARGO	2001	SUPPORT
Model	**Class**	**Count of RO's Last 365 Days**
EW1622	85	3

Full Depreciation Date	Replacement Age (Months)	Vehicle Age (Months)
4/1/2011	120	297
Fuel Type	**Replacement Meter**	**Current Meter**
RGUNL	(Blank)	0
Original Purchase Price	**Maintenance Cost (LTD)**	**Maintenance %**
$19,171	$35,061	183%

Condition:

Pressure washer needs replacement due to wear and tear, wheels corroded, needs a ramp trailer to utilize mobile pressure washer

Total Points
39
Points for Service
3
Points for Reliability
1
Points for Age
25
Points for Usage
0
Points for M&R
5
Points for Condition
5



Side View



Rear View



Hail Damage



Corrosion

Unit:

19386

Department :	Fund:
EPW	101
Division:	**Est. Price:**
BUILDING	$19,000

Description:
TRAILER

Replacement Type:
Like Kind

Unit's Primary Use:

This trailer i sused for transport of the two manlifts used in repairs to village facilities.

Needs Immediate Consideration

Make	Year	Service
PREMCO	2001	SUPPORT
Model	**Class**	**Count of RO's Last 365 Days**
7612	85	1
Full Depreciation Date	**Replacement Age (Months)**	**Vehicle Age (Months)**
8/1/2011	120	293
Fuel Type	**Replacement Meter**	**Current Meter**
	(Blank)	0
Original Purchase Price	**Maintenance Cost (LTD)**	**Maintenance %**
$7,690	$9,954	129%

Condition:
underbody corrosion

Total Points
39
Points for Service
3
Points for Reliability
1
Points for Age
25
Points for Usage
(Blank)
Points for M&R
5
Points for Condition
5



Rear View



Side View



Rust



Corrosion

Unit:

19395

Department :	Fund:
EPW	572
Division:	**Est. Price:**
WATER	$17,000

Description:
ENCLOSED TRAILER

Replacement Type:
Like Kind

Unit's Primary Use:

Excavation trailer used on water division excavation sites. Used to store shoring, braces, pump, and supplies for emergency mobile water main break excavations.

Qualifies for Replacement

Make	Year	Service
WELLSCARGO	2012	SUPPORT
Model	**Class**	**Count of RO's Last 365 Days**
EW2024	85	(Blank)

Full Depreciation Date	Replacement Age (Months)	Vehicle Age (Months)
5/1/2022	120	164
Fuel Type	**Replacement Meter**	**Current Meter**
	(Blank)	0
Original Purchase Price	**Maintenance Cost (LTD)**	**Maintenance %**
$9,620	$13,888	144%

Condition:
Extensive hail damage

Total Points
25
Points for Service
3
Points for Reliability
0
Points for Age
14
Points for Usage
(Blank)
Points for M&R
5
Points for Condition
3



Side View



Hail Damage



Rust



Corrosion

VILLAGE OF SCHAUMBURG

AGENDA ITEM SUMMARY

Recommendation to Approve an Ordinance Authorizing Disposal of FY 26/27 Replaced/Surplus Vehicles
04/14/26
Village Board

Presenter: Brian Rafferty, Fleet Division Manager
Lead Department: Engineering and Public Works

Executive Summary:

Staff is seeking formal approval to dispose of 17 vehicles and 8 pieces of equipment designated as retired or surplus in the Fiscal Year 26/27 Vehicle Replacement Schedule. Per Village Policy 7.40, vehicles that are fully depreciated and/or due for replacement due to age, mileage, condition, and operating expense are identified and recommended for disposal.

For Engineering and Public Works, a 2016 TV Truck is proposed for replacement. This unit will be traded in to offset the cost of its replacement.

For the Fire Department:

- A 2019 Ambulance is proposed for replacement. Upon receiving the new ambulance, the 2019 will go into reserve status and the future reserve, another 2019, will be proposed to be auctioned off.
- A 2017 Fire Engine is proposed for replacement. Upon receiving the new engine, the 2017 will go into reserve status and the current reserve, a 2008, will be proposed to be auctioned off.
- A 2016 Fire Truck is proposed for replacement. Upon receiving the new truck, the 2016 will go into reserve status and the current reserve, a 2012, will be proposed to be auctioned off.

Staff consider the surplus vehicle and equipment as a trade-in with the purchase of a replacement. However, if a trade-in is not possible, or if a trade-in does not yield an acceptable return value, it is included in the vehicle online auction at publicsurplus.com where other surplus vehicles are auctioned off to yield the highest residual value.

Recommended Action:

The Village Manager recommends that the Engineering & Public Works Committee recommend the Village Board adopt an Ordinance authorizing the Disposal of Surplus Vehicles as listed on the FY 26/27 Vehicle Replacement Schedule.

ATTACHMENTS:
- Vehicle Replacement Policy 7.40
- FY 26/27 Vehicle Replacement Plan
- Ordinance

POLICY STATEMENT 7.40 TITLE: - EQUIPMENT/VEHICLE REPLACEMENT (REVISED)

Engineering & Public Works Committee: October 17, 2013

COW Approval: November 19, 2013 (February 20, 2007; January 20, 2004)

Last VB Approval: December 10, 2013 (February 27, 2007; January 13, 2004)

Date: December 10, 2013

Goal Statement: The Village of Schaumburg aspires to provide its employees with equipment and vehicles that enable them to offer effective and efficient services that our residents demand while applying sound business approaches associated with understanding the costs and benefits of equipment and its capabilities; funding purchases through a pay as you go methodology as much as practical; and making decisions on replacements considering the level of usage, performance, and return through sale or trade-in.

Funding: The repository of the reserves for future equipment and vehicle replacements is known as the equipment/vehicle replacement fund. The purpose of the fund is to provide assured and adequate resources for the future replacement of vehicles and mobile equipment, not subject to the financial constraints of the general fund. Upon acquisition, any rolling stock with a purchase value in excess of one thousand dollars ($1,000.00) and an expected life in excess of one (1) year shall be automatically included in the equipment/vehicle replacement fund for future replacement, and the appropriate replacement charge will be collected from the fund from which the benefiting department derives its funding.

Revenues: The revenues for the equipment/vehicle replacement fund are generated from replacement charges (funded depreciation) applied against the operating funds of the village that support the departments that utilize the subject equipment and vehicles, surplus equipment/vehicle sale proceeds, insurance claims, and investment income.

The replacement charge is determined through the use of the following formula:

* Gross purchase price plus aftermarket expenses that have the same life expectancy as the unit, not including light bars and radios, divided by anticipated life cycle (see standards for replacement) = replacement charge.
* Trade-in or surplus sale values for the subject equipment are not included in the formula to help offset future cost increases in the equipment/vehicles that may be higher than the rate of inflation.
* Income from the settlement of property damage insurance claims on the vehicle, self-insured or third party, resulting in the total loss of village equipment or vehicle, shall be returned to the equipment/vehicle replacement fund to enable the purchase of a replacement unit. A new account shall be established for the replacement unit.

Fund Balance: The reserve fund balance of the equipment/vehicle replacement fund should be sufficient to meet the following objectives:

* Fund the current fiscal year vehicle purchase needs;
* Fund the annual average of the total five-year projected purchase needs; and
* Generate sufficient investment income to offset inflation of the vehicle replacement costs in conjunction with surplus sale revenue.

In Like Kind Replacement: The equipment/vehicle replacement fund is structured to replace each piece of equipment or vehicle by a unit of like kind. It is understood that capabilities and technology associated with the various units may change over the course of time. Cost increases due to upgrades, additions of options, or other improvements associated with units scheduled for replacement shall be highlighted as

an element of the annual budget presentation, and shall either be funded from transfers from the operating funds or from unencumbered fund balance.

Annual Budget Detail: The annual fiscal year budget shall disclose the anticipated cost for the replacement of the equipment or vehicle and the amount of money that is in the equipment/vehicle replacement fund account for the replacement. In the event that the fund account's resources are not sufficient to fully pay for the item, the difference and the means to make up the difference shall be noted in the budget document.

Additions To The Village's Equipment Inventory and Fleet: These units shall be noted as "new items" in the subject department's fiscal year budget appropriation request, with an equivalent dollar amount transferred to the equipment/vehicle replacement fund. The subject department's annual budget shall also be adjusted to include the appropriate depreciation charge and operating/maintenance support expenses associated with the new unit.

Processes: The processes associated with the development of the annual five (5) year equipment/vehicle replacement plan and development of specifications for the equipment and vehicle replacements are hereby adopted as detailed in attachment A as provided herein. The schedule for the completion of the various tasks shall be in accordance with attachment B as provided herein.

Scheduled Replacement Guidelines: Guidelines for the replacement of equipment and vehicles are hereby established, and adopted as detailed in attachment C as provided herein for the purpose of creating depreciation amounts. Each piece in the fleet vehicle and equipment inventory shall be evaluated for replacement on an annual basis. Evaluation criteria shall include:

* The cost of maintenance per mile or hour;
* Life to date utilization (miles or hours);
* Age; and
* General mechanical and body condition.

Units are considered candidates for replacement when life to date utilization and/or age meets or exceeds the expected service life, as detailed for each unit class in the scheduled replacement guidelines. Age and accumulated mileage shall serve as the principal determinant of when a vehicle or equipment is replaced. With certain exceptions, such as the exemption provided for police squad cars and where extraordinary maintenance costs have been incurred, both standards should be achieved or projected to be reached during the subject fiscal year, based on past usage, when the replacement program is developed.

The replacement guidelines shall be subject to review by the FLAGG committee.

These standards are guidelines only and individual unit life cycles may differ based on expected utilization or other operating conditions. In the event that management wishes to deviate from the guidelines, justifications shall be presented, including an understanding on how granting the deviation will affect the status of the equipment/vehicle replacement fund. The replacement charges, i.e., depreciation amounts, shall be adjusted as well to account for the change in timing for the replacement.

Any proposed deviation from the adopted guidelines shall be subject to the review and approval of the finance, legal, administration and general government (FLAGG) committee and entire village board as a part of the five-year equipment/vehicle replacement plan.

Unanticipated New Additions: Unless it can be shown to be in the interest of promoting the health, safety and welfare of the general public to do otherwise, all new requests for the purchase of additional pieces of equipment shall be presented to the village board as an element of the annual budget process.

Roles

Engineering & Public Works Department:

* Prepares five-year equipment/vehicle replacement plan with the finance department for the review and approval of the village manager's office and village board.
* Prepares the timetable for the replacement of equipment/vehicles for which the village board has provided appropriations within the annual budget.
* Communicates information on the cost of operating vehicles and equipment to the relevant village departments.
* Provides leadership and coordination for the development of specifications for bids for the replacement of equipment and vehicles.
* Makes recommendations to the engineering & public works committee on the award of contracts for bids on replacement equipment and vehicles.

Finance Department:

* Provides assistance to the engineering & public works department on the development of the five-year equipment/vehicle replacement plan.
* Establishes depreciation schedules for each piece of village owned equipment and vehicle for the equipment/vehicle replacement fund.
* Maintains the accounts for the equipment/vehicle replacement fund.
* Assists in the development of the five-year equipment/vehicle replacement plan.
* Coordinates the bidding process associated with the replacement of equipment and vehicles.

Other Village Departments:

* Provides input to the team preparing the five-year equipment/vehicle replacement fund, including whether deviations should be sought.
* Provides input on the timetable for the replacement of equipment and vehicles.
* Provides input on the development of plans and specifications for the replacement of vehicles.

Village Manager's Office:

* Provides input and approval to the "draft" five-year equipment/vehicle replacement plan prior to presentation to the village board.
* Provides input and approval to the "draft" timetable for equipment/vehicle replacement for the current fiscal year.
* Reviews and approves recommendations on the awards of bids for equipment and vehicle replacements.
* Reviews requests for additional funding associated with the purchase of equipment/vehicles where sufficient funds are not available in the equipment/vehicle replacement fund account.

Village Board - Finance, Legal, Administration and General Government Committee:

* Reviews, modifies, rejects or approves requests for additional funding associated with the purchase of equipment/vehicles where sufficient funds are not available in the equipment/vehicle replacement fund account.

Entire Village Board:

* Reviews, modifies, rejects or accepts staff's recommendations for the five-year equipment/vehicle replacement plan as a part of the overall fiscal year budget approval process.

* Reviews, modifies, rejects or accepts the FLAGG committee's recommendations on requests for additional funding associated with the purchase of equipment/vehicles where sufficient funds are not available in the equipment/vehicle replacement fund account.

Annual Vehicle and Equipment Replacement Plan Development - Attachment A

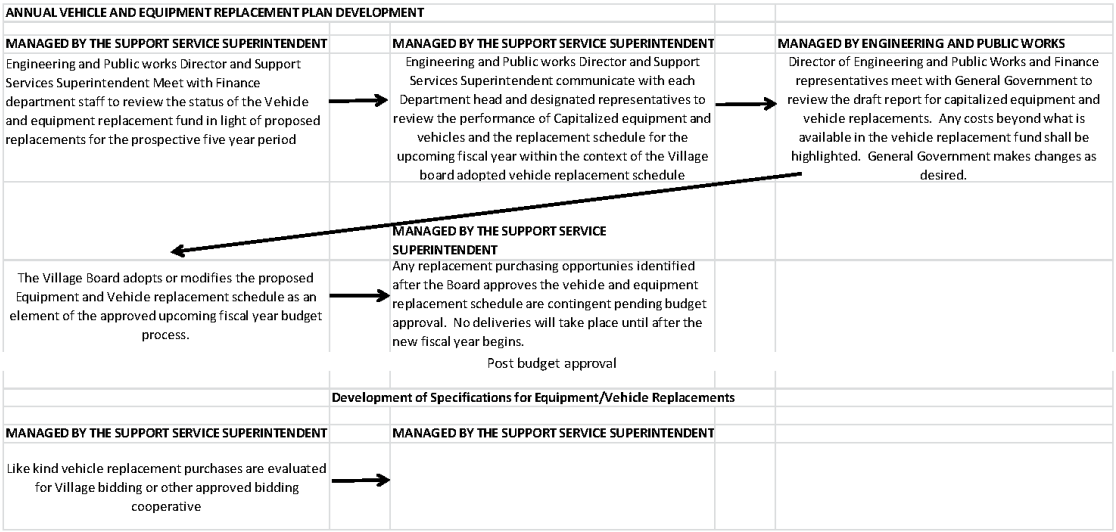

Village Of Schaumburg Vehicular Equipment Replacement Timetable—Attachment B

	Annual/Five Year Vehicular Equipment Replacement Plan	Vehicular Equipment Replacement
Month	**Task**	**Task**
May	n/a	Timetable for planned equipment/vehicle replacements for the next eighteen (18) months submitted to the village manager's office for approval
June	n/a	Specifications developed; bids sought and approved
July	n/a	Specifications developed; bids sought and approved
August	n/a	Specifications developed; bids sought and approved
September	Engineering & public works director and support services superintendent meet with finance department staff to review the status of the	Specifications developed; bids sought and approved

	equipment/vehicle replacement fund in light of proposed replacements for the prospective five (5) years	
October	Engineering & public works director and support services superintendent meet with each department director and designated representatives to review the performance of capitalized equipment and vehicles and the replacement schedule for the upcoming five (5) fiscal years within context of the village board adopted replacement schedule; deviations from the adopted replacement schedule, i.e., delays or advancements in replacement due to lower than expected usage, satisfaction with performance, shall be highlighted	Specifications developed; bids sought and approved
November	Engineering & public works director and finance department representatives meet with the village manager's office staff to review the draft replacement plan for capitalized equipment and vehicles; increased costs beyond what is available in the equipment/vehicle replacement fund shall be highlighted; manager make changes as desired	Specifications developed; bids sought and approved
January	Recommendations for upcoming fiscal year are placed in the budget document	Specifications developed; bids sought and approved
February	n/a	Specifications developed; bids sought and approved
March	n/a	Specifications developed; bids sought and approved
April	Village Board adopts or modifies the five-year equipment/vehicle replacement plan as an element of the adoption of the annual budget	Specifications developed; bids sought and approved
		Timetable for planned replacements of equipment/vehicles for next eighteen

		(18) months is prepared by fleet services foreman and support services superintendent; reviewed with the engineering & public works director, finance department, and operating departments

Guidelines for Equipment and Vehicular Replacement—Attachment C

Departments	Class Code	Class Name	Description	Months Or Miles/Hours, Whichever Occurs First
Fire	4	Large sedan	Over 110" WB, over 3,400 GVW	84 months/90,000 miles
Police	5	Police sedan-patrol	Over 110" WB, over 3,400 GVW	36 months/90,000 miles
Police	8	Police investigation	Sedans	36 months/no mileage clause
Police	9	CSO vans	Cargo vans	48 months/90,000 miles
Fire	10	Minivan	Under 6,000 GVW	72 months/60,000 miles
Engineering & Public Works	11	Van class 2	6,001-10,000 GVW	120 months/90,000 miles
Engineering & Public Works	12	Van class 3	10,001-14,000 GVW	84 months/90,000 miles
Engineering & Public Works	13	Van class 4	Over 14,000 GVW	120 months/5,000 hours
Engineering & Public Works	20	2 WD utility vehicle class 1	Under 6,000 GVW	84 months/90,000 miles
Engineering &	21	2 WD utility	6,000-10,000 GVW	72 months/60,000 miles

Public Works		vehicle class 2		
Engineering & Public Works	22	2 WD truck class 1	Under 6,000 GVW	84 months/90,000 miles
Engineering & Public Works	23	2 WD truck class 2	6,000-10,000 GVW	84 months/60,000 miles
Engineering & Public Works	24	2 WD truck class 3	10,001-14,000 GVW	84 months/60,000 miles
Engineering & Public Works	25	2 WD truck class 4	14,001-16,000 GVW	96 months/60,000 miles
Engineering & Public Works	26	2 WD truck class 5	16,001-19,500 GVW	96 months/6,000 hours
Engineering & Public Works	27	2WD truck class 6	19,501-26,000 GVW	96 months/6,000 hours
Engineering & Public Works	28	2 WD truck class 7	26,001-33,000 GVW	120 months/6,000 hours
Engineering & Public Works	29	2 WD truck class 8	33,001-50,000 GVW	144 months/6,000 hours
Police	40	4 WD utility vehicle class 1	Under 6,000 GVW	84 months/90,000 miles
Engineering & Public Works	41	4 WD utility vehicle class 2	6,001-10,000 GVW	84 months/90,000 miles
Engineering & Public Works	42	4 WD truck class 1	Under 6,000 GVW	72 months/60,000 miles
Engineering & Public Works	43	4 WD truck class 2	6,001-10,000 GVW	72 months/72,000 miles
Engineering & Public Works	44	4 WD truck class 3	10,001-14,000 GVW	72 months/72,000 miles

Engineering & Public Works	45	4 WD truck class 4	14,001-16,000 GVW	96 months/6,000 hours
Engineering & Public Works	46	4 WD truck class 5	16,001-19,500 GVW	96 months/6,000 hours
Engineering & Public Works	47	4 WD truck class 6	19,501-26,000 GVW	96 months/6,000 hours
Engineering & Public Works	48	4 WD truck class 7	26,001-33,000 GVW	120 months/6,000 hours
Engineering & Public Works	49	4 WD truck class 8	33,001-50,000 GVW	120 months/6,000 hours
Engineering & Public Works	50	Tandem axle truck		120 months/8,000 hours
Fire	51	Ambulance		96 months/10,000 hours
Fire	52	Rescue squad		120 months/9,000 hours
Fire	53	Fire engine	Water carrying pumper truck	144 months/6,000 hours
Fire	54	Fire truck	Ladder carrying truck	120 months/6,000 hours
Engineering & Public Works	56	Sweepers	Mechanical vacuum	84 months/7,500 hours
Engineering & Public Works	57	Sewer cleaners	Flusher/rodder/vacuum	84 months/5,000 hours
Engineering & Public Works	58	Utility tractor	Farm tractor	120 months/5,000 hours
Engineering & Public Works	59	Backhoe light duty	Under 1.25 Cy bucket	96 months/4,000 hours
Engineering & Public Works	60	Backhoe heavy duty	Over 1.25 Cy bucket	120 months/6,000 hours

Engineering & Public Works	61	Skid steer loader		120 months/5,000 hours
Engineering & Public Works	62	Wheel loader >2 Cy	Articulating-under 2 Cy bucket	120 months/5,000 hours
Engineering & Public Works	63	Wheel loader <2 Cy	Articulating-over 2 Cy bucket	120 months/5,000 hours
Engineering & Public Works	64	Air compressor	Trailer mounted 100-200 CFM	120 months/5,000 hours
Engineering & Public Works	65	Wood chipper	Trailered drum wood chipper	120 months/5,000 hours
Engineering & Public Works	66	Asphalt paver	Tow behind paver	96 months
Engineering & Public Works	67	Roller	Articulated	96 months
Engineering & Public Works	68	Asphalt sprayer	Applicator of asphalt emulsion	96 months
Engineering & Public Works	69	Crack sealer	Applicator of heated rubberized asphalt	60 months
Engineering & Public Works	75	Cement mixer	Tow behind	96 months
Engineering & Public Works	77	Concrete saw	Walk behind/crack	60 months
Engineering & Public Works	78	Tracked tractor	Skid type w/tracks	120 months/5,000 hours
Engineering & Public Works	79	Pump <4"	Less than 4" water pump	120 months
Engineering &	80	Pump >4"	More than 4" water pump	120 months

Public Works				
Engineering & Public Works	81	Trencher		120 months
Engineering & Public Works	82	Portable generator	Ground power unit	48 months
Engineering & Public Works	83	Trailer mounted generator	Ground power unit	144 months
Engineering & Public Works	84	Trailer light duty	Under 6,000 GVW	120 months
Engineering & Public Works	85	Trailer medium duty	6,001_10,000 GVW	120 months
Engineering & Public Works	86	Trailer heavy duty	Over 10,000 GVW	120 months
Engineering & Public Works	88	Stump grinder		84 months
Engineering & Public Works	89	Snowblowers	Large truck/loader mountes	120 months
Engineering & Public Works	90	Grounds sprayer		96 months
Engineering & Public Works	91	Large plows	Airport/specialized	120 months
Engineering & Public Works	99	Miscellaneous equipment		120 months

GVW stands for gross vehicle weight.

Unit #	Unit Description	Division	Current Meter	Full Depreciation Date	Salvage Estimate	Estimated Purchase Price
	Police					
10108	2022 Utility Interceptor	Patrol	73,218	7/7/2025	$5000-$8000	$ 56,000
10117	2023 Utility Interceptor	Patrol	57,088	5/30/2026	$3500-$5500	$ 56,000
10122	2023 Utility Interceptor	Patrol	63,836	5/30/2026	$3500-$5500	$ 56,000
10134	2023 Utility Interceptor	Patrol	62,361	5/30/2026	$3500-$5500	$ 56,000
10140	2023 Utility Interceptor	Patrol	62,283	5/30/2026	$3500-$5500	$ 56,000
19375	2016 Speed Trailer	Patrol	N/A	2/1/2026	$300-$1000	$ 23,000
	Fire					
10958	2019 Freightliner Ambulance	Fire Fight	8,146	6/1/2027	Becomes Reserve	$ 485,000
10964	2017 Fire Engine	Fire Fight	7,102	11/1/2029	Becomes Reserve	$ 1,300,000
10965	2016 Fire Truck	Fire Fight	2,370	1/1/2027	Becomes Reserve	$ 2,300,000
10969	2017 Chevy Tahoe	Fire Fight	81,588	4/1/2024	$4000-$8000	$ 86,000
10970	2020 Utility Interceptor	Fire Admin	87,308		$5000-$8000	$ 56,000
	Transportation					
19360	2016 Speed Trailer	Transportation	N/A	2/1/2026	$300-$1000	$ 23,000
	Engineering & Public Works					
10014	2016 TV Truck	Sanitary	20,705	2/2/2024	$5000-$8000	$ 425,000
10021	2015 4X4 Utility	Water	67,223	1/1/2022	$5000-$8000	$ 45,000
10034	2017 Snow and Ice Truck	Streets	4,366	11/1/2026	$12000-$20000	$ 430,000
10054	Addition to FLeet - F-150	Buildings				$ 62,000
10079	2016 4X4 Pickup Truck w/Plow	Sanitary	33,312	2/1/2022	$8000-$12000	$ 93,000
10083	Addition to Fleet - F-250	Buildings				$ 78,000
10085	2016 4X4 Dump Truck w/ Plow	Storm	47,732	4/1/2022	$8000-$12000	$ 100,000
10201	2016 Ford Focus	Buildings	20,676	9/1/2023	$3000-$6000	$ 65,500
10233	2013 Medium SUV	Buildings	65,869	12/1/2019	$5000-$8000	$ 65,500
19274	1994 GPU	Water	182	11/1/2006	$2000-$5000	$ 350,000
19372	2000 Enclosed Trailer	Landscape	N/A	9/1/2010	$1000-$3000	$ 16,000
19381	2001 Enclosed Trailer	Streets	N/A	4/1/2011	$1000-$3000	$ 16,000
19382	2001 Graffiti Trailer	Customer Service	N/A	4/1/2011	$1000-$3000	$ 30,000
19386	2001 Trailer	Buildings	N/A	8/1/2011	$500-$1500	$ 19,000
19395	2012 Enclosed Trailer	Water	N/A	5/1/2022	$1500-$3500	$ 17,000

Total Cost	$ 6,365,000

PUBLICATION OF:

ORDINANCE NO 26-_____

AN ORDINANCE AUTHORIZING THE DISPOSAL OF SURPLUS PERSONAL PROPERTY OWNED BY THE VILLAGE OF SCHAUMBURG

ADOPTED: APRIL 14, 2026

PUBLISHED IN PAMPHLET FORM PURSUANT TO AUTHORIZATION AND DIRECTION OF THE PRESIDENT AND BOARD OF TRUSTEES OF THE VILLAGE OF SCHAUMBURG ON APRIL 15, 2026

ORDINANCE NO 26-_____

ORDINANCE AUTHORIZING THE DISPOSAL OF SURPLUS PERSONAL PROPERTY OWNED BY THE VILLAGE OF SCHAUMBURG

WHEREAS, in the opinion of at least three-fourths of the corporate authorities of the Village of Schaumburg, it is no longer necessary, useful, or in the best interest of Schaumburg to retain ownership of the personal property hereinafter described; and

WHEREAS, it has been determined by the President and the Board of Trustees of the Village of Schaumburg that it is in the Village's best interest to dispose of said personal property.

NOW, THEREFORE, BE IT ORDAINED BY THE PRESIDENT AND BOARD OF TRUSTEES OF THE VILLAGE OF SCHAUMBURG:

SECTION ONE: Pursuant to Chapter 65, section 5/11-76-4 of the Illinois Compiled Statutes, the President and Board of Trustees for the Village of Schaumburg find that personal property listed below now owned by Schaumburg is no longer necessary or useful, and Schaumburg's interest would be best served by the properties' disposal.

SECTION TWO: The Village Manager for the Village of Schaumburg is hereby authorized to direct the disposal of the personal property detailed below either through approved live or on-line auctions or trade-in, with minimum values as set forth in the table below:

Unit	Asset Number	Unit Description	Minimum Value	Salvage Estimate
10108	A16000266	2022 Utility Interceptor	$5,000	$5,000-$8,000
10117	A19000283	2023 Utility Interceptor	$3,500	$3,500-$5,500
10122	A19000284	2023 Utility Interceptor	$3,500	$3,500-$5,500
10134	A19000289	2023 Utility Interceptor	$3,500	$3,500-$5,500
10140	A19000292	2023 Utility Interceptor	$3,500	$3,500-$5,500
19375	A16000261	2016 Speed Trailer	$300	$300-$1,000
10940	A15000004	2015 Freightliner Ambulance	$4,500	$4,500-$7,000
10947	A09000023	2008 Fire Engine	$5,000	$5,000-$8,000
10935	A13000041	2012 Fire Truck	$5,000	$5,000-$10,000
10969	A17000110	2017 Chevy Tahoe	$4,000	$4,000-$8,000
10970	A01000423	2020 Utility Interceptor	$5,000	$5,000-$8,000
19360	A00000089	2016 Speed Trailer	$300	$300-$1,000
10014	A16000259	2016 TV Truck	Trade in for $125,000 off new replacement	
10021	A15000142	2015 4X4 Utility	$5,000	$5,000-$8,000
10034	A17000078	2017 Snow and Ice Truck	$12,000	$12,000-$20,000
10079	A16000265	2016 4X4 Pickup Truck w/Plow	$8,000	$8,000-$12,000
10085	A16000269	2016 4X4 Dump Truck with Plow	$8,000	$8,000-$12,000
10201	A17000075	2016 Ford Focus	$2,000	$3,000-$6,000
10233	A13000047	2013 Medium SUV	$5,000	$5,000-$8,000
19274	501	1994 GPU	$2,000	$2,000-$5,000
19372	A01000195	2000 Enclosed Trailer	$1,000	$1,000-$3,000

Unit	Asset Number	Unit Description	Minimum Value	Salvage Estimate
19381	A01000413	2001 Enclosed Trailer	$1,000	$1,000-$3,000
19382	A01000343	2001 Graffiti Trailer	$1,000	$1,000-$3,000
19386	A02000312	2001 Trailer	$500	$500-$1,500
19395	A13000037	2012 Enclosed Trailer	$1,500	$1,500-$3,500
			$90,100	$90,100 to $158,000

SECTION THREE: If auctioned, the Village Manager is hereby authorized to: direct the auctioning agency to advertise the sale of the aforementioned personal property through area newspapers, direct mailings, and other channels deemed appropriate prior to the date of the auction; direct the auctioning agency to enter into an agreement for the sale of said property whereby said property is sold at auction; and direct the auctioning agency, upon payment in full for the aforesaid items of personal property, to convey and transfer the title and ownership of said personal property to the bidder.

SECTION FOUR: No bid shall be accepted for the sale of an item which is less than the minimum value set forth herein, unless the Village Manager or the designee of the Village Manager so authorizes at the time of the auction or trade-in.

SECTION FIVE: This ordinance shall be in full force and effect from and after its passage, by a vote of at least three-fourths of the corporate authorities, and approval in the manner provided by law.

AYES:
NAYS:
ABSENT:

PASSED AND APPROVED this _____ day of _____, 2026.

_____
Village President

ATTEST:

_____
Village Clerk

VILLAGE OF SCHAUMBURG

AGENDA ITEM SUMMARY

Recommendation to Authorize Participation in the Suburban Purchasing Cooperative and Award the Purchase of Fuel to Al Warren Oil Co. Inc.
04/14/26
Village Board

Presenter: Brian Rafferty, Fleet Division Manager
Lead Department: Engineering and Public Works

Account(s):	Budget:	Expense Request:
1014090-7029	$510,000	$510,000

The budget status for this request is: On Budget

Executive Summary:

The Village's existing contract for fuel purchases expires at the end of FY 25/26. Staff has historically issued invitations to bid through the Village's purchasing software. Over the last several years, staff researched alternative purchasing opportunities and discovered that participating in the Suburban Purchasing Cooperative (SPC) would allow for more favorable pricing.

Bulk fuel purchasing is measured as cents plus or minus an index published by the Oil Price Information Service (OPIS). There are HIGH, AVERAGE, and LOW indices. The Village's current contract through the vendor Petroleum Traders is minus $0.0356 off the Chicago OPIS contract AVERAGE. The SPC contract is a mark-up of $0.044 of the Chicago OPIS contract LOW. An example from our February 6, 2026, invoice shows that the SPC contract is slightly less expensive than the VOS contract.

OPIS contract average: $1.7838/gal MINUS $0.0356 = $1.7482 (Village pricing per gallon before applicable taxes/fees)

OPIS contract low: $1.6670/gal PLUS $0.044 = $1.711 (SPC pricing per gallon before applicable taxes/fees)

Below is the spend for fuel over the last three complete fiscal years.

Fiscal Year	Spend
FY 22/23	$834,256
FY 23/24	$683,431
FY 24/25	$592,773

Al Warren Oil Co. Inc. (Al Warren Oil) has won the SPC Contract #230, effective July 6, 2024, through July 5, 2025. The SPC can extend the contract for three additional one-year periods under the same terms and conditions of the contract. They are currently on their second year of the contract and have two additional renewal years remaining.

At the time of writing, fuel markets are experiencing upward pressure due to geopolitical conflict in the Middle East, which has disrupted global oil supply and increased price volatility. While current trends indicate rising prices, market conditions remain fluid and subject to rapid change. Staff will continue to monitor pricing trends and evaluate purchasing strategies to ensure the Village is receiving the most favorable rates available. Staff will also continue to monitor and track this account throughout the fiscal year and take action as necessary.

Recommended Action:

The Village Manager recommends the Engineering and Public Works Committee recommend the Village Board authorize participation in the Suburban Purchasing Cooperative Contract #230 and award the Purchase of Fuel to Al Warren Oil Co. Inc. of Hammond, IN, from May 1, 2026 through July 1, 2028, contingent upon the cooperative renewing Contract #230 to Al Warren Oil Co.

ATTACHMENTS:

- Pricing
- SPC Cooperative
- SPC Cooperative Renewal

SPC RFP #230 PRICING

ESTIMATED UNIT QUANTIY 100,000

AL WARREN OIL

			<6,000 gallons		2,500 - 6,000 gallons		>2,500 gallons	
01 87 Octane-Deliveries		**UOM**	**Unit Price**	**Extended Price**	**Unit Price**	**Extended Price**	**Unit Price**	**Extended Price**
OPIS Chicago Index Low Rack	2.5930	Gallon	$	$	$	$	$	$
Profit/Overhead		Gallon	$ 0.0440	$	$ 0.1100	$	$ 0.2000	$
Total Cost/gallon (Net Taxes)		Gallon	$ 2.6370	$ 263,700.00	$ 2.7030	$270,300.00	$ 2.7930	$279,300.00
03 89 Octane-Deliveries								
OPIS Chicago Index Low Rack	2.7897	Gallon	$	$	$	$	$	$
Profit/Overhead		Gallon	$ 0.0440	$	$ 0.1100	$	$ 0.2000	$
Total Cost/gallon (Net Taxes)		Gallon	$ 2.8334	$ 283,370.00	$ 2.8997	$289,970.00	$ 2.9897	$298,970.00
05 93 Octane-Deliveries								
OPIS Chicago Index Low Rack	3.0591	Gallon	$	$	$	$	$	$
Profit/Overhead		Gallon	$ 0.0440	$	$ 0.1100	$	$ 0.2000	$
Total Cost/gallon (Net Taxes)		Gallon	$ 3.1031	$ 310,310.00	$ 3.1691	$316,910.00	$ 3.2591	$325,910.00
04 Grade #2 Diesel Fuel-Deliveries								
OPIS Chicago Index Low Rack	2.4405	Gallon	$	$	$	$	$	$
Profit/Overhead		Gallon	$ 0.0440	$	$ 0.1100	$	$ 0.2000	$
Total Cost/gallon (Net Taxes)		Gallon	$ 2.4845	$ 248,450.00	$ 2.5505	$255,050.00	$ 0.2641	$264,050.00
05 Winter Mixture, 30% & 70% Grad Deliveries								
OPIS Chicago Index Low Rack	2.4935	Gallon	$	$	$	$	$	$
Profit/Overhead		Gallon	$ 0.0440	$	$ 0.1100	$	$ 0.2000	$
Total Cost/gallon (Net Taxes)		Gallon	$ 2.5375	$ 253,750.00	$ 2.6035	$260,350.00	$ 2.6935	$269,350.00
06 Grade #1 Diesel Fuel-Deliveries								
OPIS Chicago Index Low Rack	2.6173	Gallon	$	$	$	$	$	$
Profit/Overhead		Gallon	$ 0.0440	$	$ 0.1100	$	$ 0.2000	$

Total Cost/gallon (Net Taxes)	_____	Gallon	$ 2.6613	$ 266,130.00	$ 2.2727	$272,730.00	$ 2.8173	$281,730.00	
***07 E75 Ethanol-Deliveries**									
OPIS Chicago Index Low Rack	2.1721	Gallon	$	$	$	$	$	$	
Profit/Overhead	_____	Gallon	$ 0.0440	$	$ 0.1100	$	$ 0.2000	$	
Total Cost/gallon (Net Taxes)	_____	Gallon	$ 2.2152	$ 221,520.00	$ 2.2812	$228,120.00	$ 2.3712	$237,120.00	
*No OPIS price shown									
used OPIS Low E-85 &	2.1561								
OPIS Low-E-65	2.1863								
	4.3424	/2 = $2.1712							
08 E85 Ethanol-Deliveries									
OPIS Chicago Index Low Rack	2.1561	Gallon	$	$	$	$	$	$	
Profit/Overhead	_____	Gallon	$ 0.0440	$	$ 0.1100	$	$ 0.2000	$	
Total Cost/gallon (Net Taxes)	_____	Gallon	$ 2.2001	$ 220,010.00	$ 2.2661	$226,610.00	$ 2.3561	$235,610.00	
									TOTAL

SPC SUBURBAN PURCHASING COOPERATIVE

A Joint Purchasing Program For Local Government Agencies

June 25, 2024

Mr. Arnie Berg
Al Warren Oil Co., Inc.
1646 Summer Street
Hammond, IN 46320

Dear Ms. Okon,

This letter is to inform you that the Suburban Purchasing Cooperative (SPC) Governing Board has approved the award of the 2024 Gasoline (87, 89, & 92 Octane), Diesel Fuel, Ethanol 75 & 85 and B20 Bio Diesel Fuel Contract (#230) to Al Warren Oil Co., Inc. based on your responsible, responsive bid in compliance with all bid specification requirements.

With acceptance of this contract, Al Warren Oil Co., Inc. agrees to all terms and conditions set forth in the specifications contained within the Request for Proposals to which you responded.

The duration of the contract is Contract shall be July 6, 2024 through July 5, 2025. The SPC reserves the right to extend the contract for (3) three additional (1) one-year periods under the same terms and conditions of the original contract.

Al Warren Oil Co., Inc., Hammond, IN will handle all billing.

Al Warren Oil Co., Inc. shall remit to the NWMC Purchasing Manager on a quarterly basis, an amount equal to 0.5 % of the total dollar volume for the quarter. Contractor must furnish a report of purchases made from the contract by the last of the month following the end of each fiscal quarter:

Quarter 1 – May, June, July, due August 31
Quarter 2 – August, September, October, due November 30
Quarter 3 – November, December, January, due February 28
Quarter 4 – February, March, April, due May 31

This report is to be submitted to the NWMC Purchasing Director in Excel via email to edayan@nwmc-cog.org, and mailed to 1600 East Golf Road, Suite 0700, Des Plaines, Illinois 60016 and shall include the following information: ordering municipality, date of order, date of delivery, item descriptions, total quantity delivered, item price (including mark-up and applicable taxes), total order extended price, and total volume for the quarter.

DuPage Mayors & Managers Conference
1220 Oak Brook Road
Oak Brook, IL 60523
Suzette Quintell
Phone: (630) 571-0480
Fax: (630) 571-0484

Northwest Municipal Conference
1600 East Golf Rd., Suite 0700
Des Plaines, IL 60016
Ellen Dayan, CPPB
Phone: (847) 296-9200
Fax: (847) 296-9207

South Suburban Mayors And Managers Association
1904 West 174th Street
East Hazel Crest, IL 60429
Kristi DeLaurentiis
Phone: (708) 206-1155
Fax: (708) 206-1133

Will County Governmental League
3180 Theodore Street, Suite 101
Joliet, IL 60435
Cherie Belom
Phone: (815) 729-3535
Fax: (815) 729-3536

The SPC looks forward to a productive year working with Al Warren Oil Co., Inc. Please sign and date this agreement below, retaining copies for your files and returning the original to my attention.

Sincerely,

Ellen Dayan, CPPB
Purchasing Director
Northwest Municipal Conference

_____06/25/2024	_____ 6/26/24
Name: Ellen Dayan Date	Name: Arnie Berg Date
Northwest Municipal Conference	Al Warren Oil Co., Inc.

DuPage Mayors & Managers Conference
1220 Oak Brook Road
Oak Brook, IL 60523
Suzette Quintell
Phone: (630) 571-0480
Fax: (630) 571-0484

Northwest Municipal Conference
1600 East Golf Rd., Suite 0700
Des Plaines, IL 60016
Ellen Dayan, CPPB
Phone: (847) 296-9200
Fax: (847) 296-9207

South Suburban Mayors And Managers Association
1904 West 174th Street
East Hazel Crest, IL 60429
Kristi DeLaurentiis
Phone: (708) 206-1155
Fax: (708) 206-1133

Will County Governmental League
3180 Theodore Street, Suite 101
Joliet, IL 60435
Cherie Belom
Phone: (815) 729-3535
Fax: (815) 729-3536

SPC
SUBURBAN PURCHASING
COOPERATIVE

A Joint Purchasing Program For Local Government Agencies

May 12, 2025

Mr. Arnie Berg
Al Warren Oil Co., Inc.
1646 Summer Street
Hammond, IN 46320

Dear Mr. Berg,

This letter is to inform you that the Suburban Purchasing Cooperative (SPC) Governing Board has approved the first of three (3) available one-year contract extensions of the 2025 Gasoline (87, 89, & 92 Octane), Diesel Fuel, Ethanol 75 & 85 and B20 Bio Diesel Fuel Contract (#230) to Al Warren Oil Co., Inc. from July 6, 2025 through July 5, 2026. The SPC reserves the right to extend the contract for two (2) additional one-year periods under the same terms and conditions as the original contract.

With acceptance of this contract, Al Warren Oil Co., Inc. agrees to all terms and conditions set forth in the specifications contained within the Request for Proposals to which you responded.

Al Warren Oil Co., Inc., Hammond, IN will handle all billing.

Al Warren Oil Co., Inc. shall remit to the NWMC Purchasing Manager on a quarterly basis, an amount equal to 0.5 % of the total dollar volume for the quarter. Contractor must furnish a report of purchases made from the contract by the last of the month following the end of each fiscal quarter:

Quarter 1 – May, June, July, due August 31
Quarter 2 – August, September, October, due November 30
Quarter 3 – November, December, January, due February 28
Quarter 4 – February, March, April, due May 31

This report is to be submitted to the NWMC Purchasing Director in Excel via email to edayan@nwmc-cog.org, and mailed to 1600 East Golf Road, Suite 0700, Des Plaines, Illinois 60016 and shall include the following information: ordering municipality, date of order, date of delivery, item descriptions, total quantity delivered, item price (including mark-up and applicable taxes), total order extended price, and total volume for the quarter.

DuPage Mayors & Managers Conference
1220 Oak Brook Road
Oak Brook, IL 60523
Suzette Quintell
Phone: (630) 571-0480
Fax: (630) 571-0484

Northwest Municipal Conference
1600 East Golf Rd., Suite 0700
Des Plaines, IL 60016
Ellen Dayan, CPPB
Phone: (847) 296-9200
Fax: (847) 296-9207

South Suburban Mayors And Managers Association
1904 West 174th Street
East Hazel Crest, IL 60429
Kristi DeLaurentiis
Phone: (708) 206-1155
Fax: (708) 206-1133

Will County Governmental League
3180 Theodore Street, Suite 101
Joliet, IL 60435
Cherie Belom
Phone: (815) 729-3535
Fax: (815) 729-3536

The SPC looks forward to a productive year working with Al Warren Oil Co., Inc. Please sign and date this agreement below, retaining copies for your files and returning the original to my attention.

Sincerely,

Ellen Dayan, CPPB
Purchasing Director
Northwest Municipal Conference

05/12/2025	5/13/25
Name: Ellen Dayan Date	Name: Arnie Berg Date
Northwest Municipal Conference	Al Warren Oil Co., Inc.

DuPage Mayors & Managers Conference
1220 Oak Brook Road
Oak Brook, IL 60523
Suzette Quintell
Phone: (630) 571-0480
Fax: (630) 571-0484

Northwest Municipal Conference
1600 East Golf Rd., Suite 0700
Des Plaines, IL 60016
Ellen Dayan, CPPB
Phone: (847) 296-9200
Fax: (847) 296-9207

South Suburban Mayors And Managers Association
1904 West 174th Street
East Hazel Crest, IL 60429
Kristi DeLaurentiis
Phone: (708) 206-1155
Fax: (708) 206-1133

Will County Governmental League
3180 Theodore Street, Suite 101
Joliet, IL 60435
Cherie Belom
Phone: (815) 729-3535
Fax: (815) 729-3536

VILLAGE OF SCHAUMBURG

AGENDA ITEM SUMMARY

Recommendation to Approve Waiver of Competitive Bidding and Award the Purchase of Vehicle Parts with TransChicago Truck Group
04/14/26
Village Board

Presenter: Brian Rafferty, Fleet Division Manager
Lead Department: Engineering and Public Works

Account(s):	Budget:	Expense Request:
1014090-7011	$100,000	$100,000

The budget status for this request is: On Budget

Executive Summary:

Engineering and Public Works (EPW) Central Stores oversees ordering parts for all the Freightliner trucks in our fleet. EPW has spent the following amount on Freightliner, Cummins, and Detroit parts through TransChicago Truck Group (TransChicago), who was awarded the previous bid, over the last three fiscal years.

Fiscal Year	Spend Amounts
FY 22/23	$86,485
FY 23/24	$76,573
FY 24/25	$144,881

EPW solicited competitive bids for Freightliner, Cummins, and Detroit parts. An Invitation to Bid was distributed using the Procure Now Software. Current and past vendors were notified of the bid.

The bid closed on March 13, 2026. The bid had no responses. Staff reached out to the vendor who holds the current bid, TransChicago inquiring why they did not submit a bid. Their response indicated their workload was high and they did not see the bid request.

TransChicago has been a great vendor to deal with. They stock a wide assortment of parts necessary to keep our Freightliner trucks and vehicles with Cummins and Detroit engines in service. EPW utilizes them for both stock and non-stock parts and they are able to make multiple deliveries a day. Additionally, they are located in Elmhurst and staff has been able to do an emergency parts run to get a part quickly due to their close proximity to us.

On account of no vendors submitting a response to the bid, staff reached out to TransChicago directly and after finding out their reasoning for not submitting a bid, staff negotiated directly to continue this contract for another year with the same guidelines and pricing as our current contract.

Recommended Action:

The Village Manager recommends the Engineering and Public Works Committee recommend the Village Board approve waiver of competitive bidding and award the Purchase of Vehicle Parts with TransChicago Truck Group of Elmhurst, IL, not to exceed the budgeted amount.

ATTACHMENTS:

- Fiscal Year Spends

Vendor and account information as it pertains to your division.

WO Count	Fiscal Year	Division	Vendor	Account
839	Multiple selections	All	TRANSCHICAGO	Multiple selections

Spend by FY Month and FY

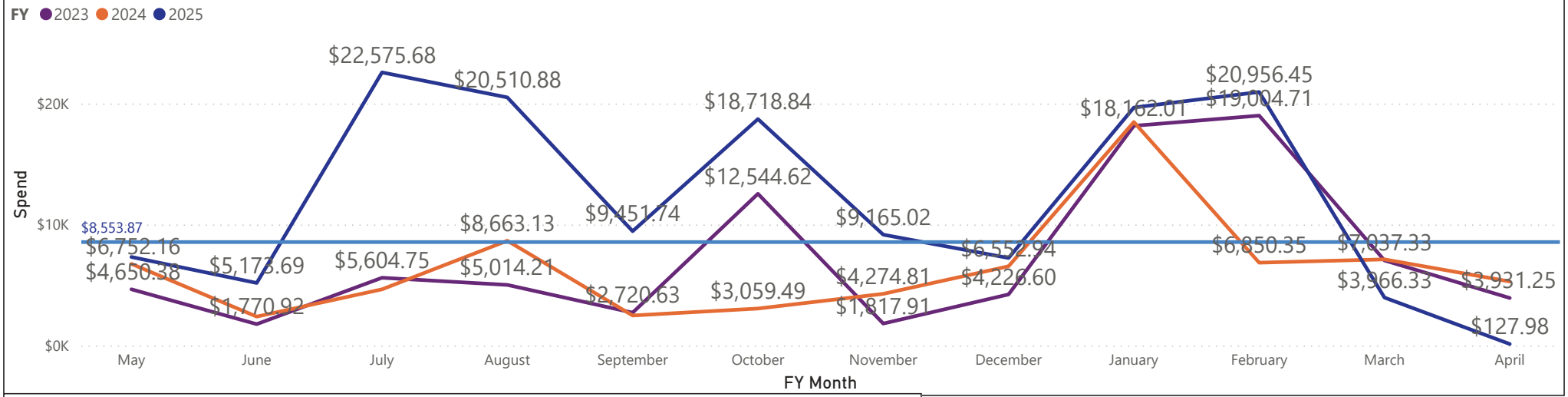

WO	TRANSDATE	Vendor	Description	Account	Spend	FY
381806	7/30/2024 10:53:37 AM	TRANSCHICAGO	Exhaust/DEF/Step parts (1 of 2)	10140907011-41	$12,409.47	FY 2024/2025
380248	8/6/2024 6:18:54 PM	TRANSCHICAGO	BRACKET-SUPPORT,DPF,MD USM,ISC, STRAP-DPF,ISC,MD USM, DEVICE,AFTERTREATME, BRACKET-SUPPORT,SCR,MD US	10140907011-41	$9,359.14	FY 2024/2025
357735	1/22/2024 8:19:51 AM	TRANSCHICAGO	Turbo kit, studs, nuts, VGT actuator	10140907011-41	$7,474.34	FY 2023/2024
290657	2/20/2023 1:59:28 PM	TRANSCHICAGO	exhaust components	10140907011-1	$5,667.58	FY 2022/2023
Total					**$307,939.25**	

FY	Spend
2023	$86,485.32
2024	$76,573.14
2025	$144,880.79
Total	**$307,939.25**

Shipping Charges

SHIPPING	$1,026.00

Spend by Vendor

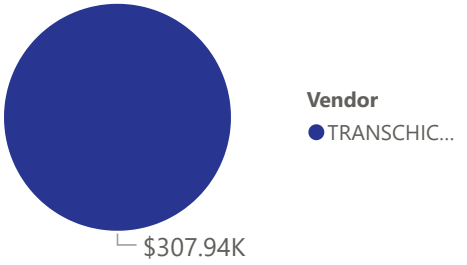

VILLAGE OF SCHAUMBURG

AGENDA ITEM SUMMARY

Recommendation to Award Bid for the Salt Conveyor Replacement Project to Kimco USA Inc.
04/14/26
Village Board

Presenter: Justin Briski, Superintendent of Field Services
Lead Department: Engineering and Public Works

Account(s):	Budget:	Expense Request:
2089010-7401 (26040-20-230)	$600,000	$598,524.86

The budget status for this request is: Under Budget

Amount Under Budget: $1,475.14

Executive Summary:

The Village issued the Invitation for Bid 2025-IFB-081 for the Salt Conveyor and Pit Replacement project, which includes the full removal and replacement of the existing conveyor system as well as the associated pit, hopper, and shed structures. The existing equipment has reached the end of its useful life, and replacement is necessary to maintain safe and efficient salt handling operations. Bids were opened on January 30, 2026, and the project is funded through Motor Fuel Tax (MFT) revenues.

Two bids were received and evaluated. Kimco USA Inc. submitted the lowest bid at $598,524.86, while Westmont Engineering submitted a bid of $714,118.00. Kimco's proposal included pricing of $290,772.93 for the conveyor removal and replacement and $307,751.93 for work associated with the pit, hopper, and shed. Kimco has successfully completed multiple municipal salt conveyor and pit replacement projects. Past municipal clients include Naperville, Libertyville, Des Plaines, Highland Park, and Will County.

This project will replace critical infrastructure needed to safely process, load, and store roadway salt, ensuring continued reliability for winter operations. Utilizing MFT funds provides an appropriate and eligible funding source for this type of improvement. Contract documents for Section 25-00156-00-MG, including the formal IDOT BLR 12320 agreement and all required supporting materials, have been prepared and executed for board approval.

Recommended Action:

The Village Manager recommends the Engineering and Public Works Committee recommend the Village Board award the bid for the Salt Conveyor Replacement Project to Kimco USA Inc. of Marshall, IL, for FY 26/27 in an amount not to exceed $598,524.86, and approve the required Resolution.

ATTACHMENTS:

- Bid Tab
- Bid Submittal
- Resolution
- IDOT Resolution
- Request for Expenditure/Authorization of MFT Funds
- Local Public Agency Formal Contract

VILLAGE OF SCHAUMBURG

Village of Schaumburg
Engineering and Public Works
Mike Hall, Department Director
Atcher Municipal Center, Schaumburg, IL 60193

EVALUATION TABULATION

IFB No. 2025-IFB-081

Salt Conveyor Replacement

RESPONSE DEADLINE: January 30, 2026 at 10:00 am
Report Generated: Monday, March 9, 2026

SELECTED VENDOR TOTALS

Vendor	Total
Kimco USA Inc	$598,524.86
Westmont engineering	$714,118.00

TABLE 1

				Kimco USA Inc	Westmont engineering
Selected	Line Item	Description	Unit of Measure	Unit Cost	Unit Cost
X	1	Complete Salt Conveyor Removal and Replacement	Lump Sum	$290,772.93	$426,706.00
X	2	Complete Pit, Hopper, and Shed Removal and Replacement	Lump Sum	$307,751.93	$287,412.00
Total				$598,524.86	$714,118.00

VILLAGE OF SCHAUMBURG

Village of Schaumburg
Engineering and Public Works
Mike Hall, Department Director
Atcher Municipal Center, Schaumburg, IL 60193

[KIMCO USA INC] RESPONSE DOCUMENT REPORT

IFB No. 2025-IFB-081

Salt Conveyor Replacement

RESPONSE DEADLINE: January 30, 2026 at 10:00 am

Report Generated: Monday, March 9, 2026

Kimco USA Inc Response

CONTACT INFORMATION

Company:
Kimco USA Inc

Email:
blake@kimcousa.com

Contact:
Blake Coffey

Address:
118 E Trefz Dr
Marshall, IL 62441

Phone:
(217) 512-0157

Website:
kimcousa.com

Submission Date:
Jan 29, 2026 4:04 PM (Central Time)

ADDENDA CONFIRMATION

Addendum #1
Confirmed Jan 26, 2026 1:39 PM by Blake Coffey

QUESTIONNAIRE

1. Authorized Person(s)*

Please provide the following information for each person(s) authorized to submit a response on behalf of your organization:

Name
Title
Phone Number
Email Address

Blake D. Coffey

Vice President

Office: 800-788-1133

Cell: 217-512-0157

Email: blake@kimcousa.com

2. Equal Employment Opportunity Clause*

EQUAL EMPLOYMENT OPPORTUNITY CLAUSE required by the Illinois Fair Employment Practices Commission as a material term of all public contracts.

During the performance of this contract, the contractor agrees as follows:

PRICE TABLES

Line Item	Description	Unit of Measure	Unit Cost
1	Complete Salt Conveyor Removal and Replacement	Lump Sum	$290,772.93
2	Complete Pit, Hopper, and Shed Removal and Replacement	Lump Sum	$307,751.93

RESOLUTION NO. R-26-_____

RESOLUTION TO UTILIZE MOTOR FUEL FUNDS IN ACCORDANCE WITH THE ILLINOIS DEPARTMENT OF TRANSPORTATION RESOLUTION FOR MAINTENANCE OF STREETS AND HIGHWAYS BY SCHAUMBURG UNDER THE ILLINOIS HIGHWAY CODE (2026-2027) (SALT CONVEYOR)

WHEREAS, The President and Board of Trustees of the Village of Schaumburg deem it necessary to appropriate the sum of $598,524.86 of Motor Fuel Tax Funds for the removal and replacement of the salt conveyor and pit under the applicable provisions of the Illinois Highway Code from (May 1, 2026) to (April 30, 2027) described in the attached in the IDOT Resolution; and

WHEREAS, it will be in the best interest of the citizens of Schaumburg to do said work;

NOW, THEREFORE, BE IT RESOLVED BY THE PRESIDENT AND BOARD OF TRUSTEES OF THE VILLAGE OF SCHAUMBURG:

SECTION ONE: That the above be incorporated as official findings of the Village of Schaumburg Board of Trustees.

SECTION TWO: That there is hereby appropriated/budgeted the sum of five hundred ninety-eight thousand, five hundred twenty-four and eighty-six hundredths ($598,524.86) for the removal and replacement of the salt conveyor and pit which will improve the ability to store salt used on streets and highways during the winter, and the expenditure of said amount is hereby authorized from the Village's allotment of motor fuel tax funds.

SECTION THREE: That the Village Manager and Village Clerk be and hereby are authorized to sign the IDOT Resolution, IDOT Resolution, and any documents in furtherance of this Resolution.

SECTION FOUR: That the Village Clerk is hereby directed to transmit two certified copies of this Resolution to the District Office of the Department of Transportation.

SECTION FIVE: This Resolution shall be in full force and effect after passage and approval by required by law.

AYES:
NAYS:
ABSENT:

PASSED AND APPROVED this _____ day of _____, 2026.

_____
Village President

ATTEST:

_____
Village Clerk

Illinois Department of Transportation

Resolution for Improvement Under the Illinois Highway Code

Is this project a bondable capital improvement?
☒ Yes ☐ No

Resolution Type	Resolution Number	Section Number
Original		25-00156-00-MG

BE IT RESOLVED, by the President and Board of Trustees (Governing Body Type) of the Village (Local Public Agency Type)

of Schaumburg (Name of Local Public Agency) Illinois that the following described street(s)/road(s)/structure be improved under the Illinois Highway Code. Work shall be done by Contract (Contract or Day Labor).

For Roadway/Street Improvements:

Name of Street(s)/Road(s)	Length (miles)	Route	From	To

For Structures:

Name of Street(s)/Road(s)	Existing Structure No.	Route	Location	Feature Crossed
Salt Conveyor and Pit Replacement			714 S Plum Grove Rd	

BE IT FURTHER RESOLVED,

1. That the proposed improvement shall consist of

The removal and replacement of the salt conveyor and pit located at the Village of Schaumburg's Engineering and Public Works Department.

2. That there is hereby appropriated the sum of five hundred ninety eight thousand, five hundred twenty-four and eighty-six hundredths Dollars ($598,524.86) for the improvement of said section from the Local Public Agency's allotment of Motor Fuel Tax funds.

BE IT FURTHER RESOLVED, that the Clerk is hereby directed to transmit four (4) certified originals of this resolution to the district office of the Department of Transportation.

I, _____ (Name of Clerk) Village (Local Public Agency Type) Clerk in and for said Village (Local Public Agency Type)

of Schaumburg (Name of Local Public Agency) in the State aforesaid, and keeper of the records and files thereof, as provided by statute, do hereby certify the foregoing to be a true, perfect and complete original of a resolution adopted by

President and Board of Trustees (Governing Body Type) of Schaumburg (Name of Local Public Agency) at a meeting held on _____ (Date).

IN TESTIMONY WHEREOF, I have hereunto set my hand and seal this _____ (Day) day of _____ (Month, Year).

(SEAL, if required by the LPA)

Clerk Signature & Date

Approved

Regional Engineer Signature & Date
Department of Transportation

NOTE: Form instructions should not be included when the form is submitted.

This form shall be used when a Local Public Agency (LPA) wants to construct an improvement using Motor Fuel Tax(MFT) funds. Refer to Chapter 9 of the Bureau of Local Roads and Streets Manual (BLRS Manual) for more detailed information. For signature requirements refer to Chapter 2, Section 3.05(b) of the BLRS Manual.

When filling out this form electronically, once a field is initially completed, fields requiring the same information will be auto-populated.

Is this project a bondable capital improvement?	Check Yes if the project was a bondable capital improvement, check no if it is not. An example of a bondable capital project may include, but is not limited to: project development, design, land acquisition, demolition when done in preparation for additional bondable construction, construction engineering, reconstruction of a roadway, designed overlay extension or new construction of roads, bridges, ramps, overpasses and underpasses, bridge replacement and/or major bridge rehabilitation. Permanent ADA sidewalk/ramp improvements and seeding/sodding are eligible expenditures if part of a larger capital bondable project. A bondable capital improvement project does not mean the LPA was required to sell bonds to fund the project, however the project did meet the criteria to be bondable.
Resolution Number	Enter the resolution number as assigned by the LPA, if applicable.
Resolution Type	From the drop down box choose the type of resolution: - Original would be used when passing a resolution for the first time for this project. - Supplemental would be used when passing a resolution increasing appropriation above previously passed resolutions. - Amended would be used when a previously passed resolution is being amended.
Section Number	Insert the section number of the improvement the resolution covers.
Governing Body Type	From the drop down box choose the type of administrative body. Choose Board for County; Council for a City or Town; President and Board of Trustees for a Village or Town.
LPA Type	From the drop down box choose the LPA body type. Types to choose from are: County, City, Town or Village.
Name of LPA	Insert the name of the LPA.
Contract or Day Labor	From the drop down choose either Contract or Day Labor.
Roadway/Street Improvements:	
Name Street/Road	Insert the name of the Street/Road to be improved. For additional locations use the Add button.
Length	Insert the length of this segment of roadway being improved in miles.
Route	Insert the Route Number of the road/street to be improved if applicable.
From	Insert the beginning point of the improvement as it relates to the Street/Road listed to the left.
To	Insert the ending point of the improvement as it relates to the Street/Road listed to the left.
Structures:	
Name Street/Road	Insert the name of the Street/Road on which the structure is located. For additional locations use the Add button.
Existing Structure No.	Insert the existing structure number this resolution covers, if no current structure insert n/a.
Route	Insert the Route number on which the structure is located.
Location	Insert the location of the structure.
Feature Crossed	Insert the feature the structure crosses.
1	Insert a description of the major items of work of the proposed improvement.
2	Insert the dollar value of the resolution for the proposed improvement to be paid for with MFT funds in words followed by in the same amount in numerical format in the ().

Name of Clerk	Insert the name of the LPA clerk.
LPA Type	Insert the type of clerk based on the LPA type. Types to choose from are: County, City, Town or Village.
Name of LPA	Insert the name of the LPA.
Governing Body Type	Insert the type of administrative body. choose Board for County; Council for a City or Town; President and Board of Trustees for a Village or Town
Name of LPA	Insert the name of the LPA.
Date	Insert the date of the meeting.
Day	Insert the day Clerk is signing the document.
Month, Year	Insert the month and year of the Clerk's signature.
Seal	The Clerk shall seal the document here, if required. If a seal is required, electronic signatures should not be used.
Clerk Signature	Clerk shall sign here.
Approved	The Department of Transportation shall sign and date here once approved.

A minimum of three (3) certified signed originals must be submitted to the Regional Engineer's District office OR email PDF completed form with electronic signatures to your local District LRS office.
Following IDOT's approval, distribution will be as follows:

Local Public Agency Clerk
Engineer (Municipal, Consultant or County)
District

Illinois Department of Transportation

Request for Expenditure/Authorization of Motor Fuel Tax Funds

Local Public Agency	Type	County	Section Number
Village of Schaumburg	Village	Cook	25-00156-00-MG

I hereby request authorization to expend Motor Fuel Tax Funds as indicated below:

Purpose	Motor Fuel Tax Amount	Rebuild Illinois Amount
County Engineer/Superintendent Salary & Expenses		n/a
Contract Construction	$598,524.86	
Day Labor Construction		
Engineering		
Engineering Investigations		
IMRF/Social Security		n/a
Maintenance		
Maintenance Engineering		
Obligation Retirement		n/a
Other		
Right-of-Way (Itemized on 2nd page)		
TOTAL	$598,524.86	

Comments

Local Public Agency Official Signature & Date

Title

Approved

Regional Engineer Signature & Date
Department of Transportation

Department of Transportation Use

Entered By	Date

Itemization of Right-of-Way Request

Location of Property			Property Owner	Acres Right-of-Way	Relocation Costs	Cost of Land Acquired	Cost of Damage to Land not Acquired	Total
Street/Road	Parcel Number	Address of Property Involved						
							TOTAL	

Add Item

Instructions for BLR 09150

This form is used when it is necessary for the Local Public Agency (LPA) to request authorization to disburse Motor Fuel Tax (MFT) funds for various purposes as listed. Some items are automatically authorized by IDOT upon approval of appropriate paperwork. For those items that are not automatically authorized, the LPA must submit this form. It shall be accompanied by the appropriate documentation (e.g. engineering bills, invoices for joint participation). Upon receipt of proper documentation, IDOT will authorize the necessary funds, up to the maximum amount that has been appropriated. Refer to Chapter 9 of the Bureau of Local Roads & Streets Manual for more information. For signature requirements refer to Chapter 2, Section 3.05(b) of the BLRS Manual.

Local Public Agency	Insert the name of the LPA.
Type	From the drop down, select the City, County, Town, Village or Road District.
County	From the drop down, select the name of the County in which the LPA is located.
Section Number	Insert the section number assigned to the project the request for the authorization is for without dashes. The dashes will be inserted automatically.
Purpose - Amount	Insert the amount the request authorization for the purpose listed to the left, under the type of funds the authorization is being requested for. Insert an amount under Motor Fuel Tax (MFT) is request is to use MFT funds. Insert an amount under Rebuild Illinois (RBI) funds if request is to use RBI funding for this purpose. Items listed as an N/A are not eligible for RBI funding.
Total	This is a calculated field, no entry is necessary. It will calculate the total for each type of funding, for all requested authorizations.
Comments	Insert any comments that are relevant to the requested authorization(s).
Signed	The appropriate LPA official must sign, indicate his/her title, and date here.
Approved	The Department of Transportation representative shall sign and date here upon approval.
Department Use Only Entered By	For IDOT use only, indicate the name of the person entering information into the MFT system.
Date	For IDOT use only, indicate the date of entry of the authorization into the MFT system.

Itemization of Right-of-Way Request

Location of Property	
Street/Road	Insert the name of the Street/Road of the acquired/used property involved in the Right-of-Way.
Parcel Number	Insert the parcel number as it applies to the location.
Address of Property Involved	Insert the address of the property involved for this location.
Property Owner	Insert the name of the owner(s) of the acquired/used right-of-way.
Relocation Costs	Insert the relocation costs for this parcel, if applicable.
Acres Right-of-Way	Insert the number of acquired/used right-of-way acres.
Cost of Land Acquires	Insert the cost of land being acquired.
Cost of Damage to Land Not Acquired	Insert the cost of damage to land not acquired.
Total	This is a calculated field, no entry is necessary. It is the sum of all costs for this parcel number.
Total(Overall)	This is a calculated field, no entry is necessary. It is the sum of all costs involving right-of-way.

A minimum of three (3) signed originals must be submitted to the Regional Engineer's District office.
Following IDOT's approval, distribution will be as follows:

Local Public Agency Clerk
Engineer (Municipal, Consultant or County)
District

Illinois Department of Transportation

Local Public Agency Formal Contract

Contractor's Name: Kimco USA Inc.

Contractor's Address: 118 E. Trefz Dr | City: Marshall | State: IL | Zip Code: 62441

STATE OF ILLINOIS

Local Public Agency: Village of Schaumburg | County: Cook | Section Number: 25-00156-00-MG

Street Name/Road Name: 714 S Plum Grove Rd | Type of Funds: MFT

☒ CONTRACT BOND (when required)

For a County and Road District Project

Submitted/Approved

Highway Commissioner Signature & Date

Submitted/Approved

County Engineer/Superintendent of HighwaysSignature & Date

For a Municipal Project

Submitted/Approved/Passed

Signature & Date

Justin Briski Digitally signed by Justin Briski Date: 2026.02.05 10:13:12 -06'00'

Official Title: Superintendent of Field Services

Department of Transportation

☒ Concurrence in approval of award

Regional Engineer Signature & Date

Jose Rios / WT 2/25/2026

Local Public Agency	Local Street/Road Name	County	Section Number
Village of Schaumburg	714 S Plum Grove Rd	Cook	25-00156-00-MG

1. THIS AGREEMENT, made and concluded the 30th (Day) day of 01 - 2026 (Month and Year) between the Village (Local Public Agency Type) of Schaumburg (Local Public Agency), known as the party of the first part, and Kimco USA Inc. (Contractor) its successor, and assigns, known as the party of the second part.

2. For and in consideration of the payments and agreements mentioned in the Proposal hereto attached, to be made and performed by the party of the first part, and according to the terms expressed in the Bond referring this contract, the party of the second part agrees with said party of the first part, at its own proper cost and expense, to do all the work, furnish all materials and all labor necessary to complete the work in accordance with the plans and specifications hereinafter described, and in full compliance with all of the terms of this contract.

3. It is also understood and agreed that the LPA Formal Contract Proposal, Special Provisions, Affidavit of Illinois Business Office, Apprenticeship or Training Program Certification, and Contract Bond hereto attached, and the Plans for Section 25-00156-00-MG (Section Number) in Village of Schaumburg (Local Public Agency), approved by the Illinois Department of Transportation on 12/29/25 (Date), are essential documents of this contract and are a part hereof.

4. IN WITNESS WHEREOF, the said parties have executed this contract on the date above mentioned.

Attest: The Village (Local Public Agency Type) of Schaumburg (Name of Local Public Agency)

Clerk Signature & Date

Jane E. Levitt 2/19/26

(SEAL, if required by the LPA)

Party of the First Part Signature & Date

By: Brian L. Townsend 2-18-2026

(If a Corporation)

Corporate Name

KIMCO USA INC.

President, Party of the Second Part Signature & Date

By: 1/29/2026

(SEAL, if required by the LPA)

(If a Limited Liability Corporation)

LLC Name

Manager or Authorized Member, Party of the Second Part

By:

(If a Partnership)

Partner Signature & Date

Attest:

Secretary Signature & Date

Kimberly J. Coffey 1/29/26

Partner Signature & Date

Partners doing Business under the firm name of

(SEAL, if required by the LPA)

Party of the Second Part

(If an individual)

Party of the Second Part Signature & Date

Illinois Department of Transportation

Local Public Agency
Formal Contract Proposal

COVER SHEET

Proposal Submitted By:

Contractor's Name			
Kimco USA Inc.			
Contractor's Address	**City**	**State**	**Zip Code**
118 E. Trefz Dr.	Marshall	IL	62441

STATE OF ILLINOIS

Local Public Agency	County	Section Number
Village of Schaumburg	Cook	25-00156-00-MG

Route(s) (Street/Road Name)	Type of Funds
714 S Plum Grove Rd	MFT

☐ Proposal Only ☒ Proposal and Plans ☐ Proposal only, plans are separate

Submitted/Approved
For Local Public Agency:

For a County and Road District Project

Submitted/Approved

Highway Commissioner Signature & Date

Submitted/Approved

County Engineer/Superintendent of Highways Signature & Date

For a Municipal Project

Submitted/Approved/Passed

Signature & Date

Justin Briski 12/23/25

Official Title

Superintendent of Field Services

Department of Transportation

Released for bid based on limited review

Regional Engineer Signature & Date

Jose Rios / WT 12/29/2025

Note: All proposal documents, including Proposal Guaranty Checks or Proposal Bid Bonds, should be stapled together to prevent loss when bids are processed.

Local Public Agency	County	Section Number	Route(s) (Street/Road Name)
Village of Schaumburg	Cook	25-00156-00-MG	714 S Plum Grove Rd

NOTICE TO BIDDERS

Sealed proposals for the project described below will be received at the office of Open Gov - Online Portal (Name of Office)

Temporary Village Hall - 1000 Woodfield RD (Address) until 10:00 AM (Time) on 01/30/26 (Date).

Sealed proposals will be opened and read publicly at the office of Open Gov - Online Portal (Name of Office)

Temporary Village Hall - 1000 Woodfield Rd (Address) at 10:00 AM (Time) on 01/30/26 (Date).

DESCRIPTION OF WORK

Location	Project Length
714 S Plum Grove Rd	6 months

Proposed Improvement

The proposed improvement shall consist of the removal and replacement of the existing salt conveyor system at the Village of Schaumburg's salt dome facility located at 714 S Plum Grove Road. Work includes demolition and disposal of the existing conveyor, hopper, pit, and shed. The construction of a new concrete pit with a push wall and support pad, installation of a new stainless steel salt conveyor system, stainless steel pit hopper, and erection of a new shed structure over the pit area.

1. Plans and proposal forms will be available in the office of

   Opengov website

2. ☐ Prequalification

   If checked, the 2 apparent as read low bidders must file within 24 hours after the letting an "Affidavit of Availability" (Form BC 57) in triplicate, showing all uncompleted contracts awarded to them and all low bids pending award for Federal, State, County, Municipal and private work. One original shall be filed with the Awarding Authority and two originals with the IDOT District Office.

3. The Awarding Authority reserves the right to waive technicalities and to reject any or all proposals as provided in BLRS Special Provision for Bidding Requirements and Conditions for Contract Proposals.

4. The following BLR Forms shall be returned by the bidder to the Awarding Authority:
   a. Local Public Agency Formal Contract Proposal (BLR 12200)
   b. Schedule of Prices (BLR 12201)
   c. Proposal Bid Bond (BLR 12230) (if applicable)
   d. Apprenticeship or Training Program Certification (BLR 12325) (do not use for project with Federal funds.)
   e. Affidavit of Illinois Business Office (BLR 12326) (do not use for project with Federal funds)

5. The quantities appearing in the bid schedule are approximate and are prepared for the comparison of bids. Payment to the Contractor will be made only for the actual quantities of work performed and accepted or materials furnished according to the contract. The scheduled quantities of work to be done and materials to be furnished may be increased, decreased or omitted as hereinafter provided.

6. Submission of a bid shall be conclusive assurance and warranty the bidder has examined the plans and understands all requirements for the performance of work. The bidder will be responsible for all errors in the proposal resulting from failure or neglect to conduct an in depth examination. The Awarding Authority will, in no case, be responsible for any costs, expenses, losses or changes in anticipated profits resulting from such failure or neglect of the bidder.

7. The bidder shall take no advantage of any error or omission in the proposal and advertised contract.

8. If a special envelope is supplied by the Awarding Authority, each proposal should be submitted in that envelope furnished by the Awarding Agency and the blank spaces on the envelope shall be filled in correctly to clearly indicate its contents. When an envelope other than the special one furnished by the Awarding Authority is used, it shall be marked to clearly indicate its contents. When sent by mail, the sealed proposal shall be addressed to the Awarding Authority at the address and in care of the official in whose office the bids are to be received. All proposals shall be filed prior to the time and at the place specified in the Notice to Bidders. Proposals received after the time specified will be returned to the bidder unopened.

9 Permission will be given to a bidder to withdraw a proposal if the bidder makes the request in writing or in person before the time for

opening proposals.

Local Public Agency	County	Section Number	Route(s) (Street/Road Name)
Village of Schaumburg	Cook	25-00156-00-MG	714 S Plum Grove Rd

PROPOSAL

1. Proposal of Kimco USA Inc.
Contractor's Name

118 E. Trefz Dr., Marshall, IL 62441
Contractor's Address

2. The plans for the proposed work are those prepared by Justin Briski, Superintendent, Village of Schaumburg and approved by the Department of Transportation on _____.

3. The specifications referred to herein are those prepared by the Department of Transportation and designated as "Standard Specifications for Road and Bridge Construction" and the " Supplemental Specifications and Recurring Special Provisions" thereto, adopted and in effect on the date of invitation for bids.

4. The undersigned agrees to accept, as part of the contract, the applicable Special Provisions indicated on the "Check Sheet for Recurring Special Provisions" contained in this proposal.

5. The undersigned agrees to complete the work within N/A working days or by 08/31/26 unless additional time is granted in accordance with the specifications.

6. The successful bidder at the time of execution of the contract shall be required to deposit a contract bond for the full amount of the award. When a contract bond is not required, the proposal guaranty check will be held in lieu thereof. If this proposal is accepted and the undersigned fails to execute a contract and contract bond as required, it is hereby agreed that the Bid Bond of check shall be forfeited to the Awarding Authority.

7. Each pay item should have a unit price and a total price. If no total price is shown or if there is a discrepancy between the products of the unit price multiplied by the quantity, the unit price shall govern. If a unit price is omitted, the total price will be divided by the quantity in order to establish a unit price. A bid may be declared unacceptable if neither a unit price nor a total price is shown.

8. The undersigned submits herewith the schedule of prices on BLR 12201 covering the work to be performed under this contract.

9. The undersigned further agrees that if awarded the contract for the sections contained in the combinations on BLR 12201, the work shall be in accordance with the requirements of each individual proposal for the multiple bid specified in the Schedule for Multiple Bids below.

10. A proposal guaranty in the proper amount, as specified in BLRS Special Provision for Bidding Requirements and Conditions for Contract Proposals, will be required. Bid Bonds shall be allowed as a proposal guaranty. Accompanying this proposal is either a bid bond, if allowed, on Department form BLR 12230 or a proposal guaranty check, complying with the specifications, made payable to: Village of Schaumburg Treasurer of _____.
The amount of the check is Sixty Thousand Dollars and 00/100 ($60,000.00).

Attach Cashier's Check or Certified Check Here

In the event that one proposal guaranty check is intended to cover two or more bid proposals, the amount must be equal to the sum of the proposal guaranties which would be required for each individual bid proposal. If the proposal guaranty check is placed in another bid proposal, state below where it may be found.

The proposal guaranty check will be found in the bid proposal for: Section Number 25-00156-00-MG

Local Public Agency	County	Section Number	Route(s) (Street/Road Name)
Village of Schaumburg	Cook	25-00156-00-MG	714 S Plum Grove Rd

CONTRACTOR CERTIFICATIONS

The certifications hereinafter made by the bidder are each a material representation of fact upon which reliance is placed should the Department enter into the contract with the bidder.

1. **Debt Delinquency.** The bidder or contractor or subcontractor, respectively, certifies that it is not delinquent in the payment of any tax administered by the Department of Revenue unless the individual or other entity is contesting, in accordance with the procedure established by the appropriate Revenue Act, its liability for the tax or the amount of the tax. Making a false statement voids the contract and allows the Department to recover all amounts paid to the individual or entity under the contract in a civil action.

2. **Bid-Rigging or Bid Rotating**. The bidder or contractor or subcontractor, respectively, certifies that it is not barred from contracting with the Department by reason of a violation of either 720 ILCS 5/33E-3 or 720 ILCS 5/33E-4.

   A violation of section 33E-3 would be represented by a conviction of the crime of bid-rigging which, in addition to Class 3 felony sentencing, provides that any person convicted of this offense, or any similar offense of any state or the United States which contains the same elements as this offense shall be barred for 5 years from the date of conviction from contracting with any unit of State or local government. No corporation shall be barred from contracting with any unit of State or local government as a result of a conviction under this Section of any employee or agent of such corporation if the employee so convicted is no longer employed by the corporation: (1) it has been finally adjudicated not guilty or (2) if it demonstrates to the governmental entity with which it seeks to contract that entity finds that the commission of the offense was neither authorized, requested, commanded, nor performed by a director, officer or a high managerial agent on behalf of the corporation.

   A violation of Section 33E-4 would be represented by a conviction of the crime of bid-rotating which, in addition to Class 2 felony sentencing, provides that any person convicted of this offense or any similar offense of any state or the United States which contains the same elements as this offense shall be permanently barred from contracting with any unit of State of Local government. No corporation shall be barred from contracting with any unit of State or Local government as a result of a conviction under this Section of any employee or agent of such corporation if the employee so convicted is no longer employed by the corporation and: (1) it has been finally adjudicated not guilty or (2) if it demonstrates to the governmental entity with which it seeks to contract and that entity finds that the commission of the offense was neither authorized, requested, commanded, nor performed by a director, officer or a high managerial agent on behalf of the corporation.

3. **Bribery.** The bidder or contractor or subcontractor, respectively, certifies that, it has not been convicted of bribery or attempting to bribe an officer or employee of the State of Illinois or any unit of local government, nor has the firm made an admission of guilt of such conduct which is a matter or record, nor has an official, agent, or employee of the firm committed bribery or attempted bribery on behalf of the firm and pursuant to the direction or authorization of a responsible official of the firm.

4. **Interim Suspension or Suspension.** The bidder or contractor or subcontractor, respectively, certifies that it is not currently under a suspension as defined in Subpart I of Title 44 Subtitle A Chapter III Part 6 of the Illinois Administrative code. Furthermore, if suspended prior to completion of this work, the contract or contracts executed for the completion of this work may be canceled.

Local Public Agency	County	Section Number	Route(s) (Street/Road Name)
Village of Schaumburg	Cook	25-00156-00-MG	714 S Plum Grove Rd

SIGNATURES

(If an individual)

Bidder Signature & Date

Business Address

City | State | Zip Code

(If a partnership)

Firm Name

Signature & Date

Title

Business Address

City | State | Zip Code

Insert the Names and Addresses of all Partners

(If a corporation)

Corporate Name: Kimco USA Inc.

Signature & Date

Title: Vice President & Director

Business Address: 118 E. Trefz Dr.

City: Marshall | State: IL | Zip Code: 62441

Insert Names of Officers

President: Max E. Coffey

Attest:



Secretary

Secretary

Kimberly J. Coffey

Treasurer

Kimberly J. Coffey

Illinois Department of Transportation

Schedule of Prices

Contractor's Name				
Kimco USA Inc.				
Contractor's Address	**City**		**State**	**Zip Code**
118 E. Trefz Dr.	Marshall, IL 62441		IL	62441
Local Public Agency	**County**		**Section Number**	
Village of Schaumburg	Cook		25-00156-00-MG	
Route(s) (Street/Road Name)				
714 S Plum Grove Rd				

Schedule for Multiple Bids

Combination Letter	Section Included in Combinations	Total

Schedule for Single Bid

(For complete information covering these items, see plans and specifications.)

Item Number	Items	Unit	Quantity	Unit Price	Total
1	Salt Conveyor - Rem/Rep	Lump	1	$290,772.93	$290,772.93
2	Pit, Hopper, Shed - Rem/Rep	Lump	1	$307,751.93	$307,751.93
				Bidder's Total Proposal	$ 598,524.86

1. Each pay item should have a unit price and a total price.
2. If no total price is shown or if there is a discrepancy between the product of the unit price multiplied by the quantity, the unit price shall govern.
3. If a unit price is omitted, the total price will be divided by the quantity in order to establish a unit price.
4. A bid may be declared unacceptable if neither a unit price or total price is shown.

Illinois Department of Transportation

Apprenticeship and Training Program Certification

Local Public Agency	County	Street Name/Road Name	Section Number
Village of Schaumbug	Cook	714 S Plum Grove Rd	25-00156-00-MG

All contractors are required to complete the following certification

☐ For this contract proposal or for all bidding groups in this deliver and install proposal.

☐ For the following deliver and install bidding groups in this material proposal.

Illinois Department of Transportation policy, adopted in accordance with the provisions of the Illinois Highway Code, requires this contract to be awarded to the lowest responsive and responsible bidder. The award decision is subject to approval by the Department. In addition to all other responsibility factors, this contract or deliver and install proposal requires all bidders and all bidder's subcontractors to disclose participation in apprenticeship or training programs that are (1) approved by and registered with the United States Department of Labor's Bureau of Apprenticeship and Training, and (2) applicable to the work of the above indicated proposals or groups. Therefore, all bidders are required to complete the following certification:

1. Except as provided in paragraph 4 below, the undersigned bidder certifies that it is a participant, either as an individual or as part of a group program, in an approved apprenticeship or training program applicable to each type of work or craft that the bidder will perform with its own employees.

2. The undersigned bidder further certifies, for work to be performed by subcontract, that each of its subcontractors either (A) is, at the time of such bid, participating in an approved, applicable apprenticeship or training program; or (B) will, prior to commencement of performance of work pursuant to this contract, establish participation in an approved apprenticeship or training program applicable to the work of the subcontract.

3. The undersigned bidder, by inclusion in the list in the space below, certifies the official name of each program sponsor holding the Certificate of Registration for all of the types of work or crafts in which the bidder is a participant and that will be performed with the bidder's employees. Types of work or craft that will be subcontracted shall be included and listed as subcontract work. The list shall also indicate any type of work or craft job category for which there is no applicable apprenticeship or training program available.

Installation of Concrete Salt Conveyor Pit - Kimco USA Inc Work Force Prevailing Wage, No apprenticeship or training available
Intallation of Stainless Steel Salt Conveyor - Kimco USA Inc. Work Force Prevailing Wage, No apprenticeship or training available
We are currently looking at partnering with Associated Builders and Contractors of Illinois to offer apprenticeship and training program. We haven't decided if we are using a subcontractor or our own forces to complete the concrete salt conveyor pit. If we do we will make sure they have the applicable Certificate of Registration with the USDOL

4. Except for any work identified above, if any bidder or subcontractor shall perform all or part of the work of the contract or deliver and install proposal solely by individual owners, partners or members and not by employees to whom the payment of prevailing rates of wages would be required, check the following box, and identify the owner/operator workforces and positions of ownership. ☐

The requirements of this certification and disclosure are a material part of the contract, and the contractor shall require this certification provision to be included in all approved subcontracts. The bidder is responsible for making a complete report and shall make certain that each type of work or craft job category that will be utilized on the project is accounted for and listed. The Department at any time before or afterward may require the production of a copy of each applicable Certificate of Registration issued by the United States Department of Labor evidencing such participation by the contractor and any or all of its subcontractors. In order to fulfill the participation requirement, it shall not be necessary that any applicable program sponsor be currently taking or that it will take applications for apprenticeship, training or employment during the performance of the work of this contract or deliver and install proposal.

Bidder	Signature & Date
Kimco USA Inc.	1/29/26
Title	
Vice President	

Address	City	State	Zip Code
118 E. Trefz Dr.	Marshall	IL	62441

Illinois Department of Transportation

Affidavit of Illinois Business Office

Local Public Agency	County	Street Name/Road Name	Section Number
Village of Schaumburg	Cook	714 S Plum Grove Rd	25-00156-00-MG

I, Blake D. Coffey (Name of Affiant) of Charleston (City of Affiant), Illinois (State of Affiant), being first duly sworn upon oath, state as follows:

1. That I am the Vice President & Director (Officer or Position) of Kimco USA Inc. (Bidder).
2. That I have personal knowledge of the facts herein stated.
3. That, if selected under the proposal described above, Kimco USA Inc. (Bidder), will maintain a business office in the State of Illinois, which will be located in Clark (County) County, Illinois.
4. That this business office will serve as the primary place of employment for any persons employed in the construction contemplated by this proposal.
5. That this Affidavit is given as a requirement of state law as provided in Section 30-22(8) of the Illinois Procurement Code.

Signature & Date: 1/29/2026

Print Name of Affiant: Blake D. Coffey

Notary Public

State of IL

County Edgar

Signed (or subscribed or attested) before me on 1.29.2026 (date) by Blake Coffey (name/s of person/s), authorized agent(s) of Kimco USA INC (Bidder)

LOGAN M DEWEESE
Notary Public - State of Illinois
Commission No. 977276
My Comm. Exp. 08/28/2027
(SEAL)

Notary Public Signature & Date: 1.29.26

My commission expires 8.28.27

Illinois Department of Transportation

Check Sheet for Recurring Special Provisions

Local Public Agency	County	Section Number
Village of Schaumburg	Cook	25-00156-00-MG

☐ **Check this box for lettings prior to 01/01/2026**

The Following Recurring Special Provisions Indicated By An "X" Are Applicable To This Contract And Are Included By Reference:

Recurring Special Provisions

Check Sheet #			Page No.
1	☐	Additional State Requirements for Federal-Aid Construction Contracts	87
2	☐	Subletting of Contracts (Federal-Aid Contracts)	90
3	☐	EEO	91
4	☐	Specific EEO Responsibilities Non Federal-Aid Contracts	101
5	☐	Required Provisions - State Contracts	106
6	☐	Asbestos Bearing Pad Removal	112
7	☐	Asbestos Waterproofing Membrane and Asbestos HMA Surface Removal	113
8	☐	Temporary Stream Crossings and In-Stream Work Pads	114
9	☐	Construction Layout Stakes	115
10	☐	Use of Geotextile Fabric for Railroad Crossing	118
11	☐	Subsealing of Concrete Pavements	120
12	☐	Hot-Mix Asphalt Surface Correction	124
13	☐	Pavement and Shoulder Resurfacing	126
14	☐	Patching with Hot-Mix Asphalt Overlay Removal	127
15	☐	Polymer Concrete	129
16	☐	Reserved	131
17	☐	Bicycle Racks	132
18	☐	Temporary Portable Bridge Traffic Signals	134
19	☐	Nighttime Inspection of Roadway Lighting	136
20	☐	English Substitution of Metric Bolts	137
21	☐	Calcium Chloride Accelerator for Portland Cement Concrete	138
22	☐	Quality Control of Concrete Mixtures at the Plant	139
23	☐	Quality Control/Quality Assurance of Concrete Mixtures	147
24	☐	Reserved	163
25	☐	Reserved	164
26	☐	Temporary Raised Pavement Markers	165
27	☐	Restoring Bridge Approach Pavements Using High-Density Foam	166
28	☐	Portland Cement Concrete Inlay or Overlay	169
29	☐	Portland Cement Concrete Partial Depth Hot-Mix Asphalt Patching	173
30	☐	Longitudinal Joint and Crack Patching	176
31	☐	Concrete Mix Design - Department Provided	178
32	☐	Station Numbers in Pavements or Overlays	179

Local Public Agency	County	Section Number
Village of Schaumburg	Cook	25-00156-00-MG

The Following Local Roads And Streets Recurring Special Provisions Indicated By An "X" Are Applicable To This Contract And Are Included By Reference:

Local Roads And Streets Recurring Special Provisions

Check Sheet #			Page No.
LRS 1		**Reserved**	181
LRS 2	☐	Furnished Excavation	182
LRS 3	☐	Work Zone Traffic Control Surveillance	183
LRS 4	☐	Flaggers in Work Zones	184
LRS 5	☐	Contract Claims	185
LRS 6	☒	Bidding Requirements and Conditions for Contract Proposals	186
LRS 7	☐	Bidding Requirements and Conditions for Material Proposals	192
LRS 8		**Reserved**	198
LRS 9	☐	Bituminous Surface Treatments	199
LRS 10		**Reserved**	203
LRS 11	☐	Employment Practices	204
LRS 12	☐	Wages of Employees on Public Works	206
LRS 13	☐	Selection of Labor	208
LRS 14	☐	Paving Brick and Concrete Paver Pavements and Sidewalks	209
LRS 15	☐	Partial Payments	212
LRS 16	☐	Protests on Local Lettings	213
LRS 17	☐	Substance Abuse Prevention Program	214
LRS 18	☐	Multigrade Cold Mix Asphalt	215
LRS 19	☐	Reflective Crack Control Treatment	216

Illinois Department of Transportation

Special Provisions

Local Public Agency	County	Section Number
Village of Schaumburg	Cook	25-00156-00-MG

The following Special Provision supplement the "Standard Specifications for Road and Bridge Construction", adopted January 1, 2022, the latest edition of the "Manual on Uniform Traffic Control Devices for Streets and Highways", and the "Manual of Test Procedures of Materials" in effect on the date of invitation of bids, and the Supplemental Specification and Recurring Special Provisions indicated on the Check Sheet included here in which apply to and govern the construction of the above named section, and in case of conflict with any parts, or parts of said Specifications, the said Special Provisions shall take precedence and shall govern.

SPECIAL PROVISION

SALT CONVEYOR, PIT, AND SHED REPLACEMENT

1. DESCRIPTION

This work consists of furnishing all labor, equipment, materials, and incidentals necessary to remove the existing salt conveyor system, pit, hopper, support components, and shed, and to install a complete replacement system at the locations shown in the plans. Work includes demolition, disposal, fabrication, and installation of a new conveyor, stainless steel pit hopper, drive system, pit structure, support framing, push wall, shed, and all components necessary to provide a fully functional salt-handling system.

All work shall be performed according to the Standard Specifications for Road and Bridge Construction, the contract plans, and these Special Provisions.

2. MATERIALS

All materials shall be new and shall conform to the applicable sections of the Standard Specifications unless modified herein.

Stainless steel conveyor components shall include a minimum 10-gauge stainless steel mainframe, stainless steel supports and bracing, stainless steel tail mounts, stainless steel belt wrap sections, stainless steel return idlers or UHMW rollers, stainless steel deflector plates, and a minimum 24-inch conveyor belt.

The pit hopper shall be fabricated from stainless steel plate, stainless steel angle bracing, stainless steel bars, rods, and cross members as shown in the plans and manufacturer's specifications.

The drive system shall include a 40-HP electric motor (3-phase), stainless steel NEMA 4X control panel, stainless steel head roller, tail roller, belt track roller, take-up roller, gear reducer, and an automatic lubrication system.

The pit structure, supporting steel, push wall, and shed shall be constructed using materials meeting the applicable structural steel, concrete, and reinforcement requirements of the Standard Specifications.

Electrical components shall conform to the National Electrical Code and Section 801 of the Standard Specifications.

3. CONSTRUCTION REQUIREMENTS

3.1 Demolition

The Contractor shall remove and dispose of all components of the existing conveyor system, pit, supports,

shed, electrical components, and other elements identified in the plans. Removal shall conform to Section 202 of the Standard Specifications.

3.2 Installation

The Contractor shall fabricate and install the new conveyor system, pit hopper, supports, pit structure, and shed in accordance with the plans and manufacturer's technical specifications. All stainless steel fabrication shall meet applicable ASTM standards and IDOT tolerances.

3.3 Electrical Work

All wiring, conduit, controls, and electrical connections shall be installed in accordance with the National Electrical Code and Section 801. The Contractor shall coordinate with the agency regarding available power.

3.4 Testing and Commissioning

The conveyor system shall be tested for proper alignment, belt tracking, motor and drive performance, control panel operation, material flow rate, and discharge distance. The installation will not be accepted until full operational capability is demonstrated.

4. METHOD OF MEASUREMENT

This work will be measured for payment on a lump sum basis. No separate measurement will be made for demolition, structural steel, concrete, electrical work, control panel installation, lubrication system, testing, or any incidental work necessary to complete the installation.

Everything required to provide a complete, operational conveyor system shall be included in the lump sum.

5. BASIS OF PAYMENT

This work will be paid for at the contract unit price per Lump Sum for "Salt Conveyor, Pit, and Shed Replacement."

Payment shall be full compensation for demolition, disposal, fabrication and installation of the conveyor system, pit hopper, pit structure, push wall, shed, electrical components, control panel, drive system, lubrication system, testing, commissioning, materials, labor, equipment, and all incidental work necessary to complete the installation.

No additional payment will be made for temporary supports, specialty fabrication, utility coordination, or modifications made to ensure full system functionality.

6. SUBMITTALS

The Contractor shall submit the following for approval before fabrication begins: installation drawings, shop drawings stamped by an Illinois Structural Engineer, technical data sheets for the conveyor, motor, electrical components, lubrication system, and all operation and maintenance manuals.

GENERAL NOTES

1. PROJECT LOCATION: LAKE COUNTY, IL
2. CODES AND DOCUMENTS
   A. THE FOLLOWING CODES WERE USED FOR DESIGN:
      I. INTERNATIONAL BUILDING CODE 2012
      II. AASHTO LRFD BRIDGE DESIGN SPECIFICATIONS
      III. BUILDING CODE REQUIREMENTS FOR STRUCTURAL CONCRETE, ACI 318-11
3. DESIGN CRITERIA
   A. LIVE LOADS
      I. DESIGN TRUCK WHEEL LOAD (HL-93) 16 KIPS
      II. SALT LOAD IN HOPPER 24 KIPS
4. FOUNDATIONS
   A. FOUNDATIONS HAVE BEEN DESIGNED BASED ON THE FOLLOWING DESIGN VALUES:
      I. WEIGHT OF BACKFILL 115 PCF
      II. AT-REST LATERAL SOIL COEFFICIENT 0.63
   B. THE CONTRACTOR SHALL VERIFY WITH A GEOTECHNICAL ENGINEER THAT THE FOLLOWING IS IN CONFORMANCE WITH THE RECOMMENDATIONS OUTLINED IN THE GEOTECHNICAL REPORT BY PROFESSIONAL SERVICE INDUSTRIES, INC., DATED JUNE 5, 2008:
      I. THE BEARING STRATUM AT EACH FOUNDATION IS AS ASSUMED IN THE REPORT.
      II. THE ALLOWABLE BEARING CAPACITIES MEET OR EXCEED THE RECOMMENDED VALUES.
      III. THE FILL MATERIAL IS INSTALLED PER THE REPORT RECOMMENDATIONS.
   C. PLACE FOOTINGS AND SLAB ON GRADE ON UNDISTURBED, NATURAL SUBGRADE, AS VERIFIED BY A QUALIFIED GEOTECHNICAL ENGINEER RETAINED FOR THE PROJECT. IF SUBGRADE IS DEEMED UNSUITABLE, EXTEND EXCAVATION TO SUITABLE, UNDISTURBED NATURAL SUBGRADE AND RAISE GRADE USING COMPACTED ENGINEERED FILL OR PLAIN CONCRETE, AS DETERMINED AND INSPECTED BY A QUALIFIED GEOTECHNICAL ENGINEER.
5. REINFORCEMENT
   A. REINFORCEMENT SHALL CONFORM TO THE FOLLOWING STANDARDS AND MATERIAL PROPERTIES:
      I. DEFORMED BARS: ASTM A615 GRADE 60
   B. WHERE DOWELS ARE INDICATED BUT NOT SIZED, PROVIDE DOWELS THAT MATCH SIZE AND LOCATION OF MAIN REINFORCEMENT AND LAP SPLICE WITH THE MAIN REINFORCEMENT.
   C. UNLESS OTHERWISE NOTED, USE CLASS B LAP SPLICES.
   D. REINFORCEMENT SHALL HAVE THE FOLLOWING CONCRETE PROTECTION (CLEAR COVER), UNLESS OTHERWISE NOTED:
      I. CONCRETE CAST AGAINST AND PERMANENTLY EXPOSED TO EARTH: 3"
      II. FORMED CONCRETE SURFACES TO BE EXPOSED TO EARTH OR WEATHER:
         2" (#6 BARS AND LARGER)
         1½" (#5 BARS AND SMALLER)
6. CONCRETE MATERIAL PROPERTIES
   A. CONCRETE STRENGTH SHALL MEET THE FOLLOWING 28-DAY COMPRESSIVE STRENGTHS (f'c) UNLESS OTHERWISE NOTED:
      4500 PSI, NORMAL WEIGHT CONCRETE
   B. CONCRETE TO HAVE SLUMP, AIR ENTRAINMENT, OTHER ADMIXTURES, ETC. IN ACCORDANCE WITH OWNER SPECIFICATIONS. AIR ENTRAINMENT SHALL BE BETWEEN 4.5 AND 7.5 PERCENT.
7. CAST IN PLACE CONCRETE
   A. CONCRETE WORK SHALL CONFORM TO ALL REQUIREMENTS OF ACI 301, LATEST EDITION, SPECIFICATIONS FOR STRUCTURAL CONCRETE FOR BUILDINGS, EXCEPT AS MODIFIED BY SUPPLEMENTAL REQUIREMENTS CONTAINED IN THE FOLLOWING NOTES.
   B. UNLESS OTHERWISE DETAILED OR NOTED, REINFORCING SHALL BE IN ACCORDANCE WITH "THE ACI DETAILING MANUAL, SP-66" & ACI 315 "DETAILS AND DETAILING OF CONCRETE REINFORCEMENT."
   C. CHAMFER EXPOSED CORNERS OF CONCRETE SLAB AND WALLS 3/4".
   D. ERECTION OF REINFORCED CONCRETE SHALL CONFORM TO THE LATEST EDITION OF ACI 117 "SPECIFICATION FOR CONCRETE CONSTRUCTION AND MATERIALS."
8. EMBEDDED ITEMS
   A. ALL EMBEDDED PLATES AND ANGLES SHALL BE ASTM A36 MATERIAL AND HOT DIP GALVANIZED PER ASTM A123.
   B. WELDING STUDS SHALL BE H4L HEADED CONCRETE ANCHORS AS MANUFACTURED BY NELSON STUD WELDING, INC., 1/2" DIAMETER x 4" LONG, TYP. UNLESS NOTED OTHERWISE.

DRAWING INDEX

S-1 GENERAL NOTES & DRAWING INDEX
S-2 SALT CONVEYOR PIT PLAN
S-3 SALT CONVEYOR PIT SECTIONS
S-4 SALT CONVEYOR PIT DETAILS
S-5 SALT CONVEYOR PIT DETAILS
S-6 SALT CONVEYOR PIT DETAILS
S-7 SALT CONVEYOR PIT DETAILS
S-8 SALT CONVEYOR PIT DETAILS

DRAWING NO.: S–1

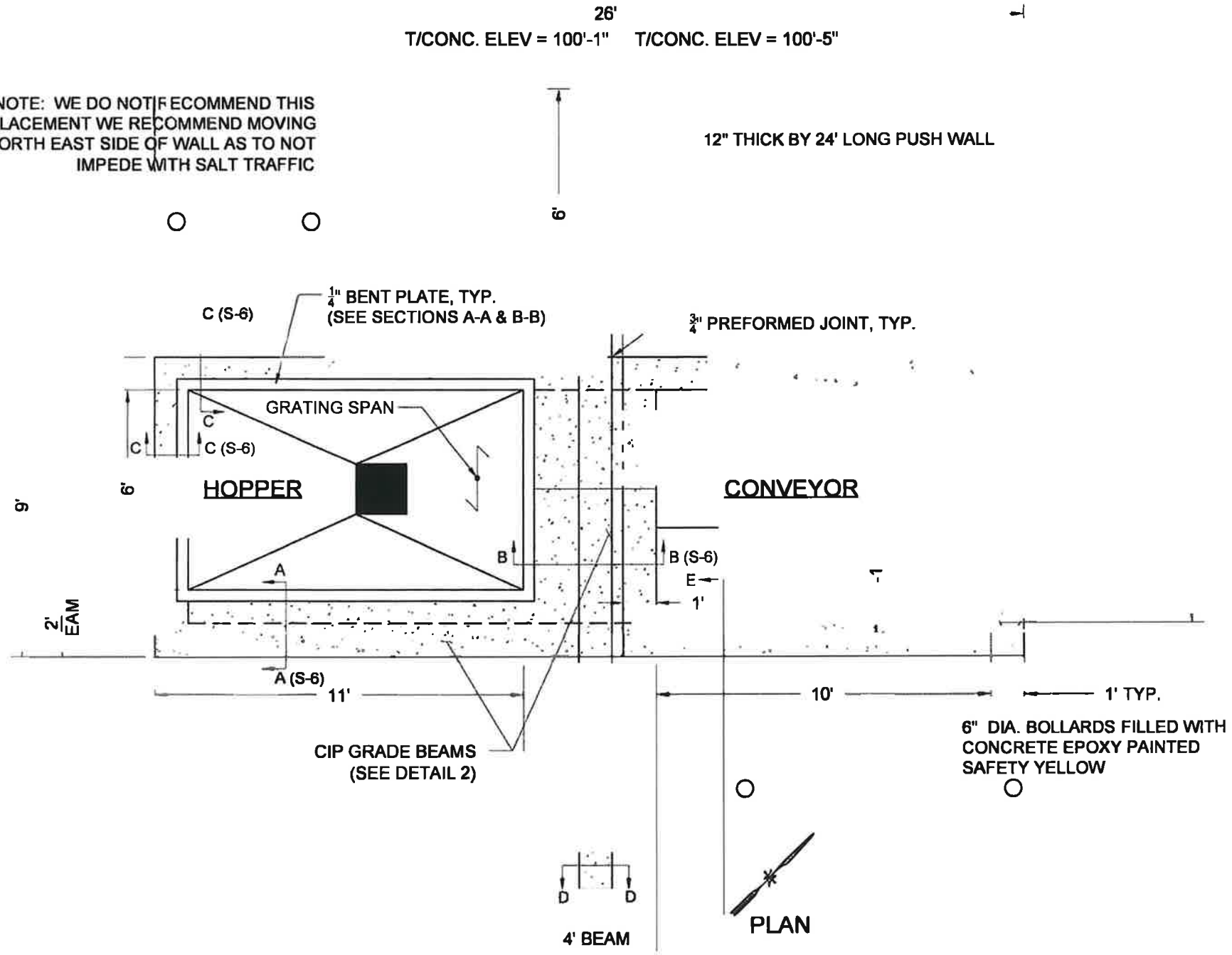

NOTES:
1. FOR GENERAL NOTES, SEE DRAWING S-1.
2. EXISTING GRADE REFERENCE ELEV. APPROX. = 100'-0"

DRAWING NO.: S–2

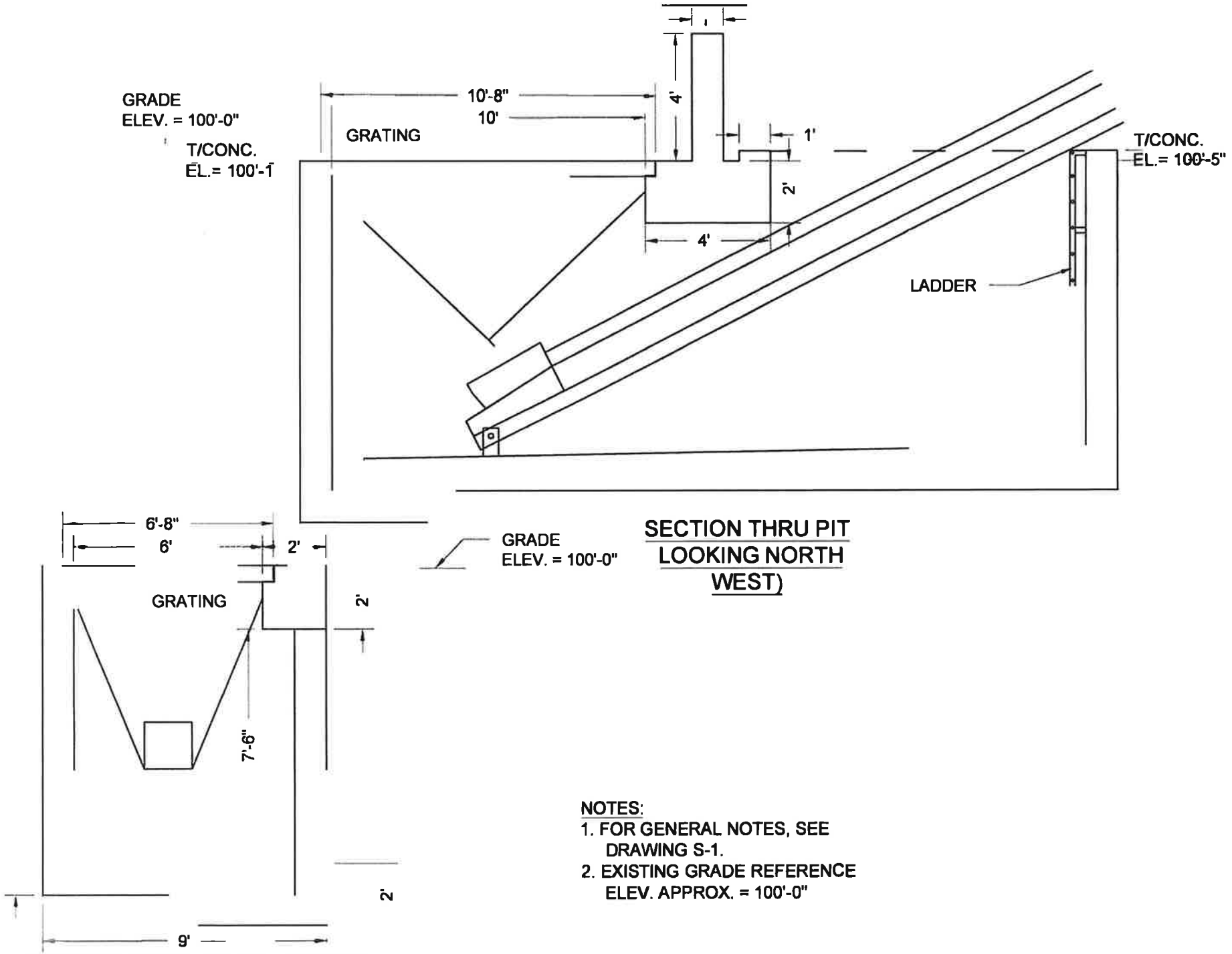

SECTION THRU PIT
LOOKING NORTH
WEST)

SECTION THRU PIT AT HOPPER
LOOKING SOUTH WEST

NOTES:
1. FOR GENERAL NOTES, SEE DRAWING S-1.
2. EXISTING GRADE REFERENCE ELEV. APPROX. = 100'-0"

DRAWING NO.: S-3

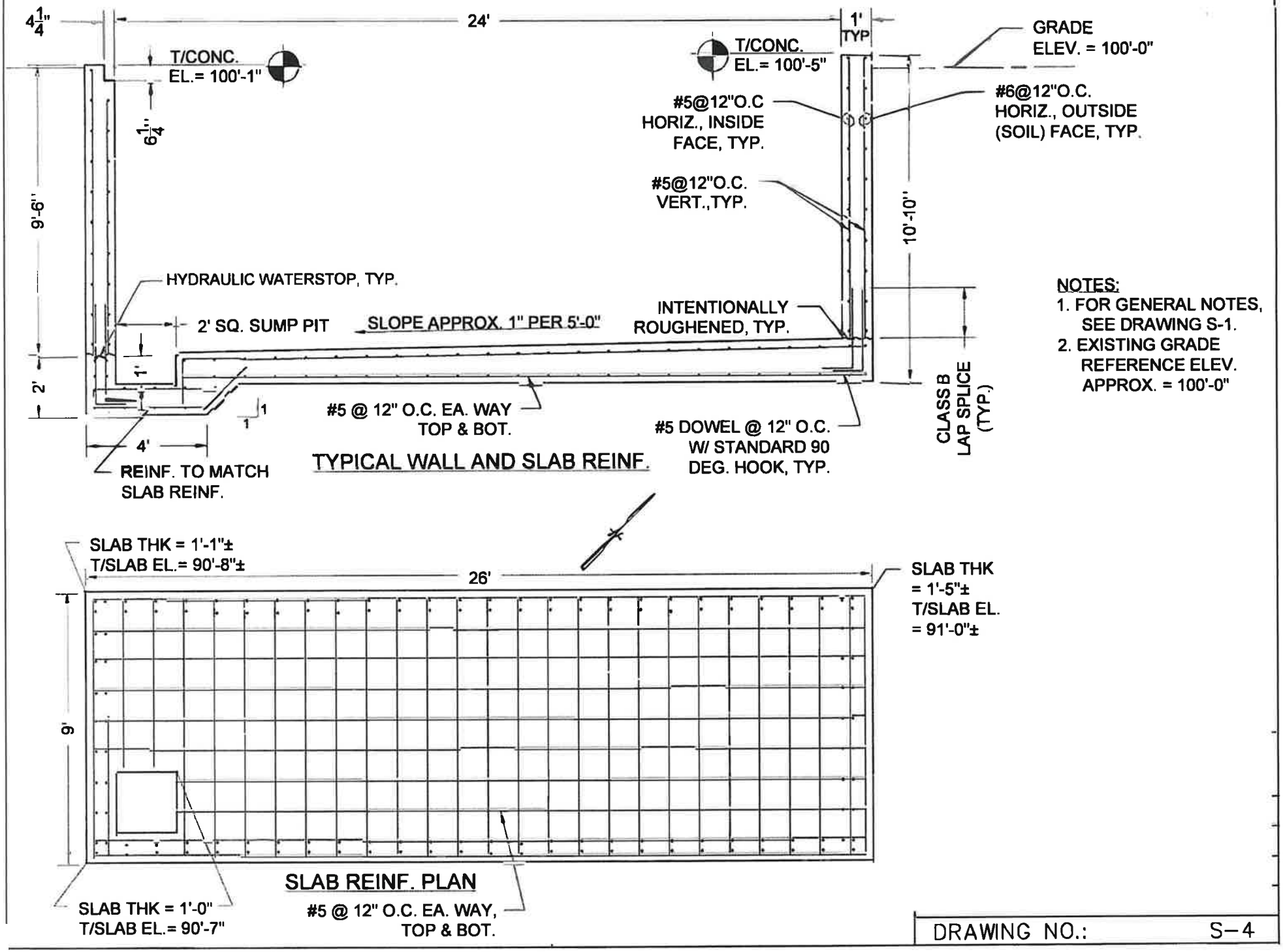

DRAWING NO.: S-4

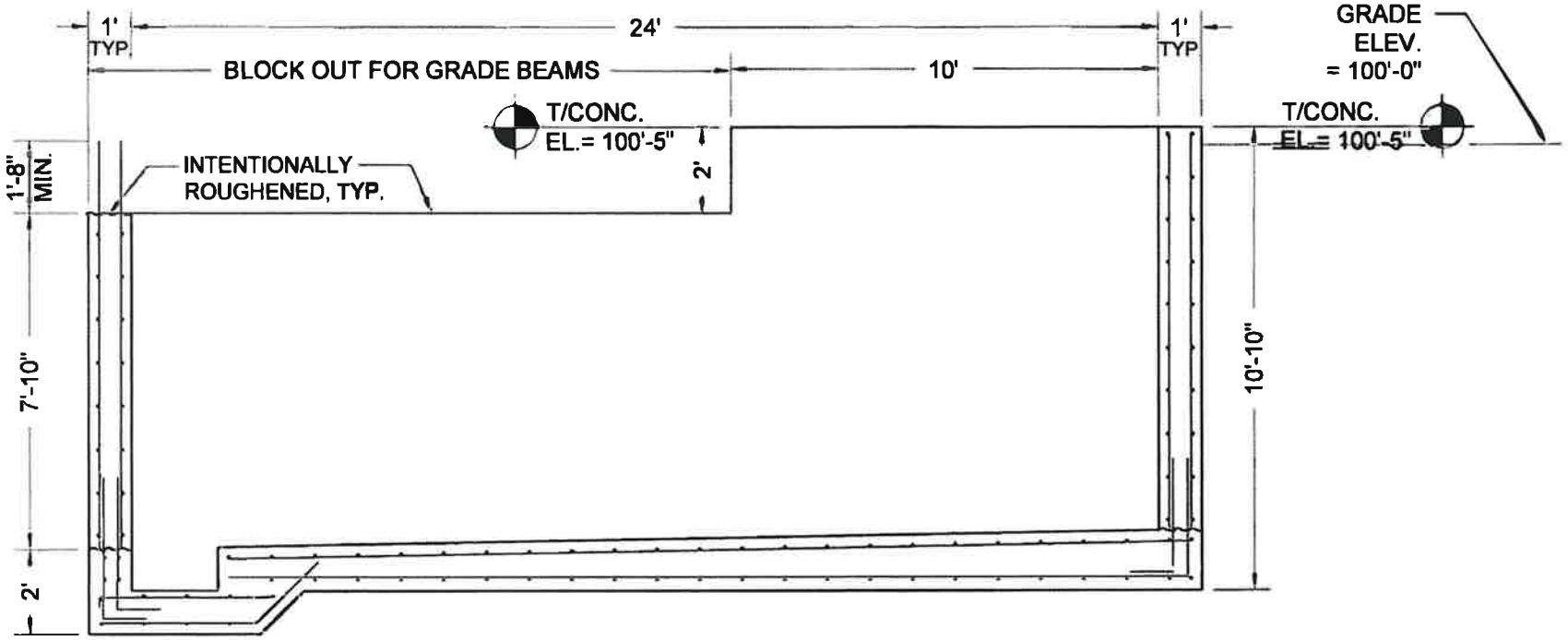

WALL BLOCKOUT FOR GRADE BEAMS

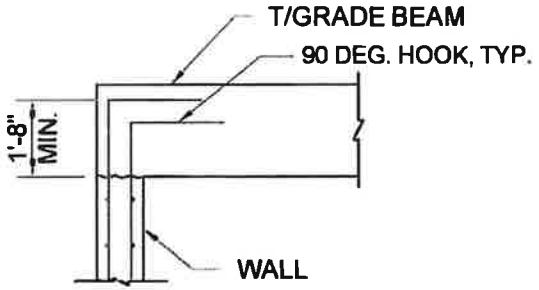

TYPICAL BAR EXTENSION DETAIL AT GRADE BEAMS

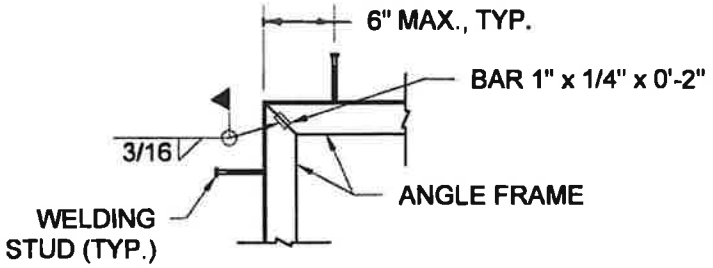

EMBEDDED PLATE TYPICAL CORNER DETAIL

NOTES:
1. FOR GENERAL NOTES, SEE DRAWING S-1.
2. EXISTING GRADE REFERENCE ELEV. APPROX. = 100'-0"

DRAWING NO.: S-5

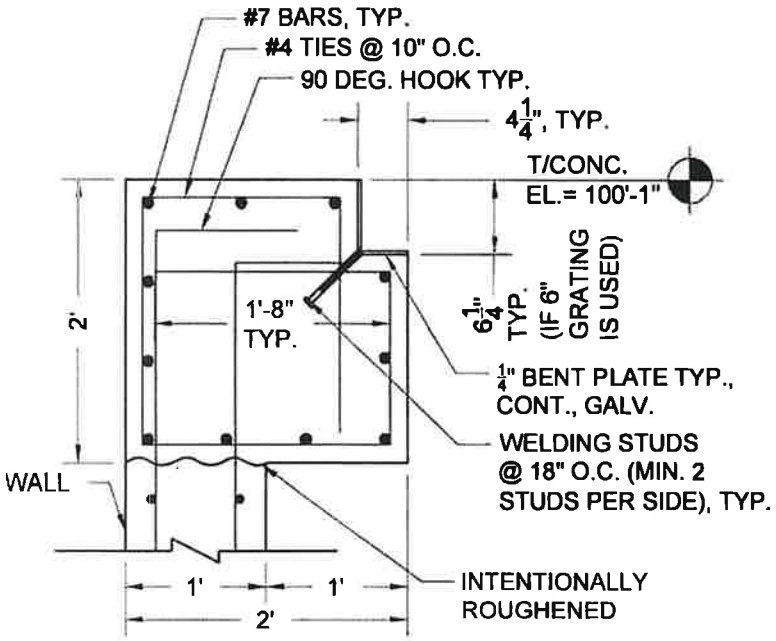

SECTION A-A: 2'X2' GRADE BEAM

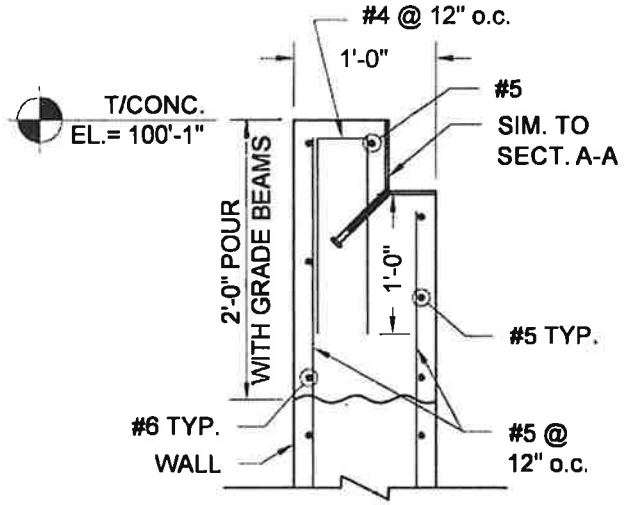

SECTION C-C

NOTES:
1. FOR GENERAL NOTES, SEE DRAWING S-1.
2. EXISTING GRADE REFERENCE ELEV. APPROX. = 100'-0"

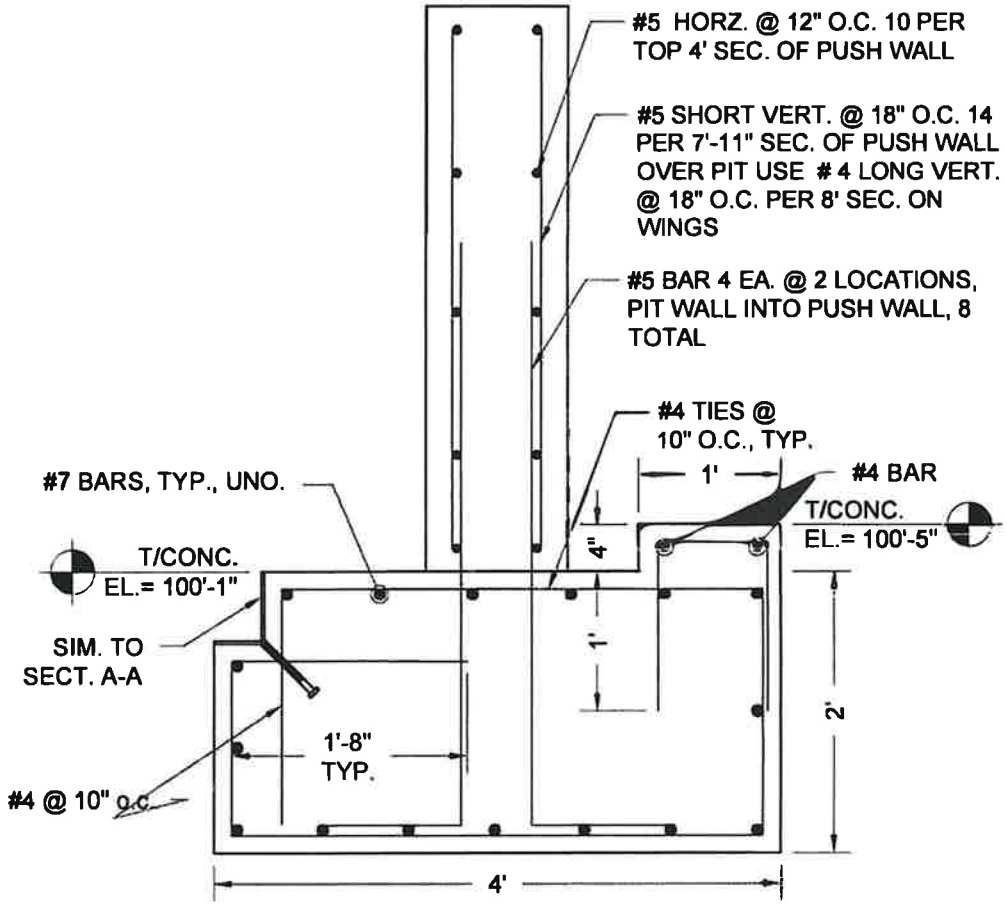

SECTION B-B: 4'X2' GRADE BEAM

DRAWING NO.: S-6

CONVEYOR SIDE HOPPER SIDE

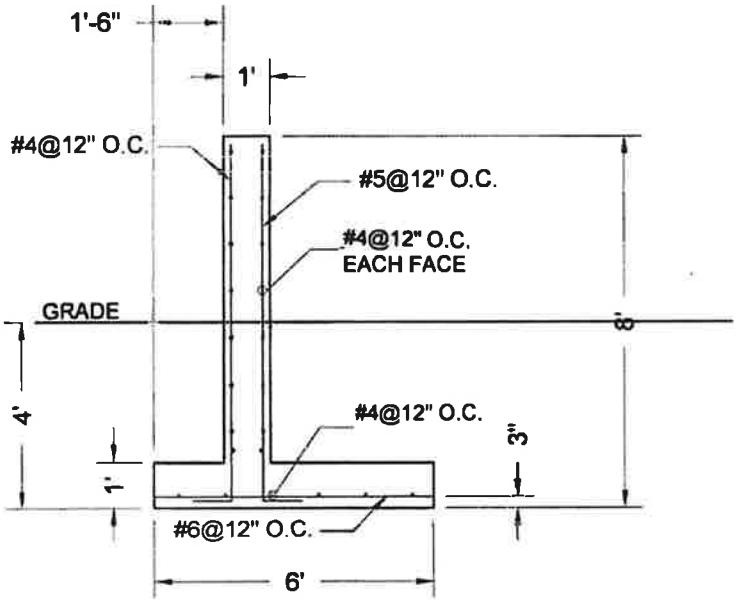

SECTION D-D

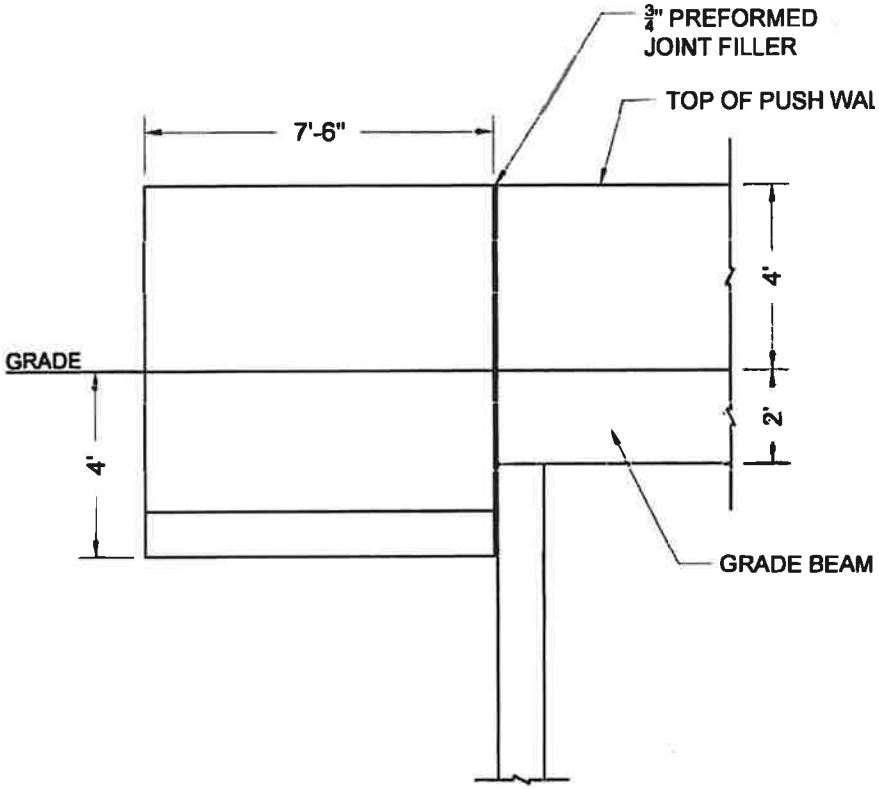

SECTION E-E

DRAWING NO.: S-7

PLAN VIEW

NOTES:
1. STANDARD 90 DEG. HOOK
   = 7½" FOR #5 BARS
   = 9" FOR #6 BARS
2. CLASS B LAP SPLICE
   = 28" FOR #5 BARS
   = 33" FOR #6 BARS
   (IF MULTIPLE BAR SIZES, USE THE LONGER LAP SPLICE)

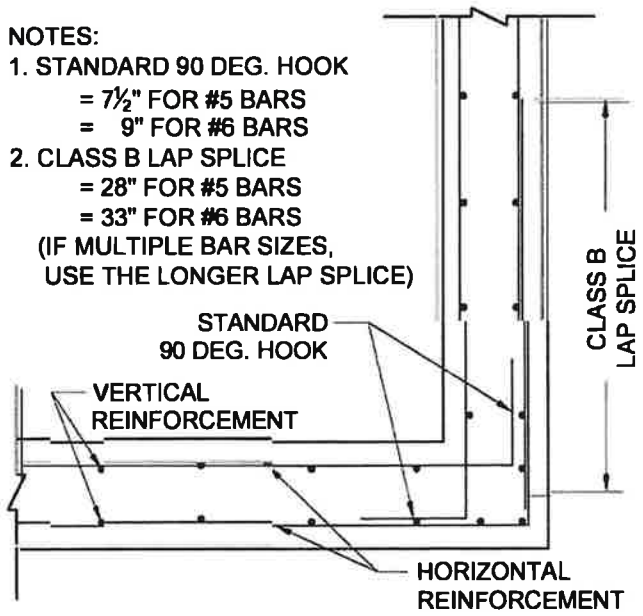

TYPICAL WALL CORNER REINFORCEMENT

(SCALE: NOT TO SCALE)

DRAWING NO.: S–8

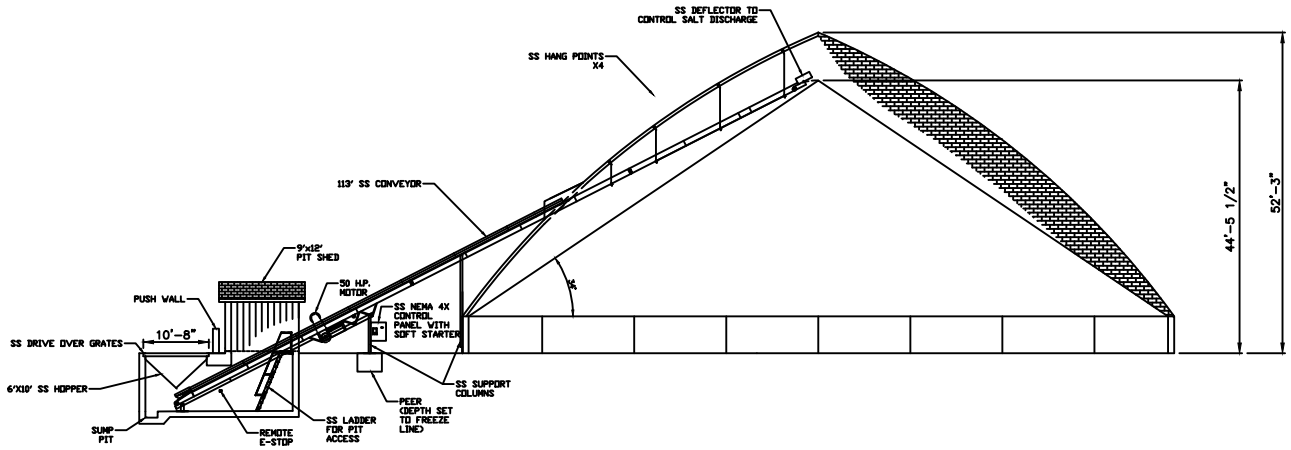

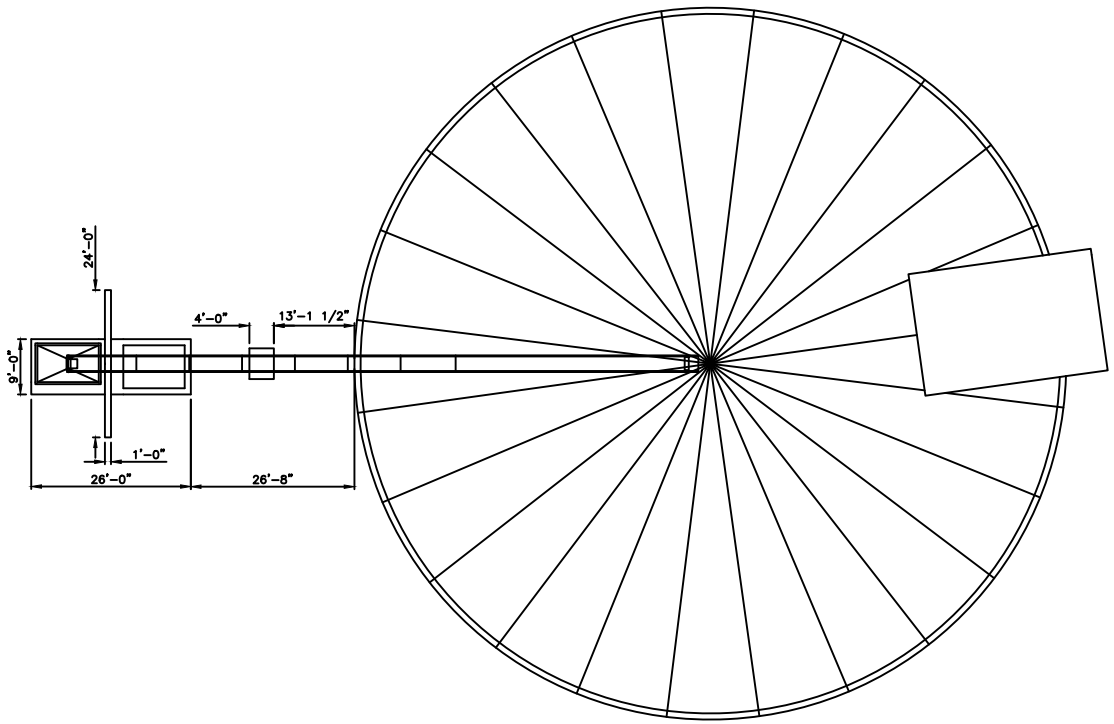

NOTES:
-SS TO DENOTE 304 STAINLESS STEEL
-EXISTING PIT TO BE DEMOLISHED
-SEE ADDITIONAL PIT DRAWING FOR STRUCTURAL ENGENDERED PLANS

GENERAL NOTES

1. PROJECT LOCATION: LAKE COUNTY, IL
2. CODES AND DOCUMENTS
   - A. THE FOLLOWING CODES WERE USED FOR DESIGN:
     - I. INTERNATIONAL BUILDING CODE 2012
     - II. AASHTO LRFD BRIDGE DESIGN SPECIFICATIONS
     - III. BUILDING CODE REQUIREMENTS FOR STRUCTURAL CONCRETE, ACI 318-11
3. DESIGN CRITERIA
   - A. LIVE LOADS
     - I. DESIGN TRUCK WHEEL LOAD (HL-93) 16 KIPS
     - II. SALT LOAD IN HOPPER 24 KIPS
4. FOUNDATIONS
   - A. FOUNDATIONS HAVE BEEN DESIGNED BASED ON THE FOLLOWING DESIGN VALUES:
     - I. WEIGHT OF BACKFILL 115 PCF
     - II. AT-REST LATERAL SOIL COEFFICIENT 0.63
   - B. THE CONTRACTOR SHALL VERIFY WITH A GEOTECHNICAL ENGINEER THAT THE FOLLOWING IS IN CONFORMANCE WITH THE RECOMMENDATIONS OUTLINED IN THE GEOTECHNICAL REPORT BY PROFESSIONAL SERVICE INDUSTRIES, INC., DATED JUNE 5, 2008:
     - I. THE BEARING STRATUM AT EACH FOUNDATION IS AS ASSUMED IN THE REPORT.
     - II. THE ALLOWABLE BEARING CAPACITIES MEET OR EXCEED THE RECOMMENDED VALUES.
     - III. THE FILL MATERIAL IS INSTALLED PER THE REPORT RECOMMENDATIONS.
   - C. PLACE FOOTINGS AND SLAB ON GRADE ON UNDISTURBED, NATURAL SUBGRADE, AS VERIFIED BY A QUALIFIED GEOTECHNICAL ENGINEER RETAINED FOR THE PROJECT. IF SUBGRADE IS DEEMED UNSUITABLE, EXTEND EXCAVATION TO SUITABLE, UNDISTURBED NATURAL SUBGRADE AND RAISE GRADE USING COMPACTED ENGINEERED FILL OR PLAIN CONCRETE, AS DETERMINED AND INSPECTED BY A QUALIFIED GEOTECHNICAL ENGINEER.
5. REINFORCEMENT
   - A. REINFORCEMENT SHALL CONFORM TO THE FOLLOWING STANDARDS AND MATERIAL PROPERTIES:
     - I. DEFORMED BARS: ASTM A615 GRADE 60
   - B. WHERE DOWELS ARE INDICATED BUT NOT SIZED, PROVIDE DOWELS THAT MATCH SIZE AND LOCATION OF MAIN REINFORCEMENT AND LAP SPLICE WITH THE MAIN REINFORCEMENT.
   - C. UNLESS OTHERWISE NOTED, USE CLASS B LAP SPLICES.
   - D. REINFORCEMENT SHALL HAVE THE FOLLOWING CONCRETE PROTECTION (CLEAR COVER), UNLESS OTHERWISE NOTED:
     - I. CONCRETE CAST AGAINST AND PERMANENTLY EXPOSED TO EARTH: 3”
     - II. FORMED CONCRETE SURFACES TO BE EXPOSED TO EARTH OR WEATHER:
       - 2” (#6 BARS AND LARGER)
       - 1½” (#5 BARS AND SMALLER)
6. CONCRETE MATERIAL PROPERTIES
   - A. CONCRETE STRENGTH SHALL MEET THE FOLLOWING 28-DAY COMPRESSIVE STRENGTHS (f’c) UNLESS OTHERWISE NOTED:
     - 4500 PSI, NORMAL WEIGHT CONCRETE
   - B. CONCRETE TO HAVE SLUMP, AIR ENTRAINMENT, OTHER ADMIXTURES, ETC. IN ACCORDANCE WITH OWNER SPECIFICATIONS. AIR ENTRAINMENT SHALL BE BETWEEN 4.5 AND 7.5 PERCENT.
7. CAST IN PLACE CONCRETE
   - A. CONCRETE WORK SHALL CONFORM TO ALL REQUIREMENTS OF ACI 301, LATEST EDITION, SPECIFICATIONS FOR STRUCTURAL CONCRETE FOR BUILDINGS, EXCEPT AS MODIFIED BY SUPPLEMENTAL REQUIREMENTS CONTAINED IN THE FOLLOWING NOTES.
   - B. UNLESS OTHERWISE DETAILED OR NOTED, REINFORCING SHALL BE IN ACCORDANCE WITH “THE ACI DETAILING MANUAL, SP-66” & ACI 315 "DETAILS AND DETAILING OF CONCRETE REINFORCEMENT."
   - C. CHAMFER EXPOSED CORNERS OF CONCRETE SLAB AND WALLS 3/4".
   - D. ERECTION OF REINFORCED CONCRETE SHALL CONFORM TO THE LATEST EDITION OF ACI 117 "SPECIFICATION FOR CONCRETE CONSTRUCTION AND MATERIALS."
8. EMBEDDED ITEMS
   - A. ALL EMBEDDED PLATES AND ANGLES SHALL BE ASTM A36 MATERIAL AND HOT DIP GALVANIZED PER ASTM A123.
   - B. WELDING STUDS SHALL BE H4L HEADED CONCRETE ANCHORS AS MANUFACTURED BY NELSON STUD WELDING, INC., 1/2" DIAMETER x 4" LONG, TYP. UNLESS NOTED OTHERWISE.

DRAWING INDEX

S-1 GENERAL NOTES & DRAWING INDEX
S-2 SALT CONVEYOR PIT PLAN
S-3 SALT CONVEYOR PIT SECTIONS
S-4 SALT CONVEYOR PIT DETAILS
S-5 SALT CONVEYOR PIT DETAILS
S-6 SALT CONVEYOR PIT DETAILS
S-7 SALT CONVEYOR PIT DETAILS
S-8 SALT CONVEYOR PIT DETAILS



DRAWING NO.: S–1

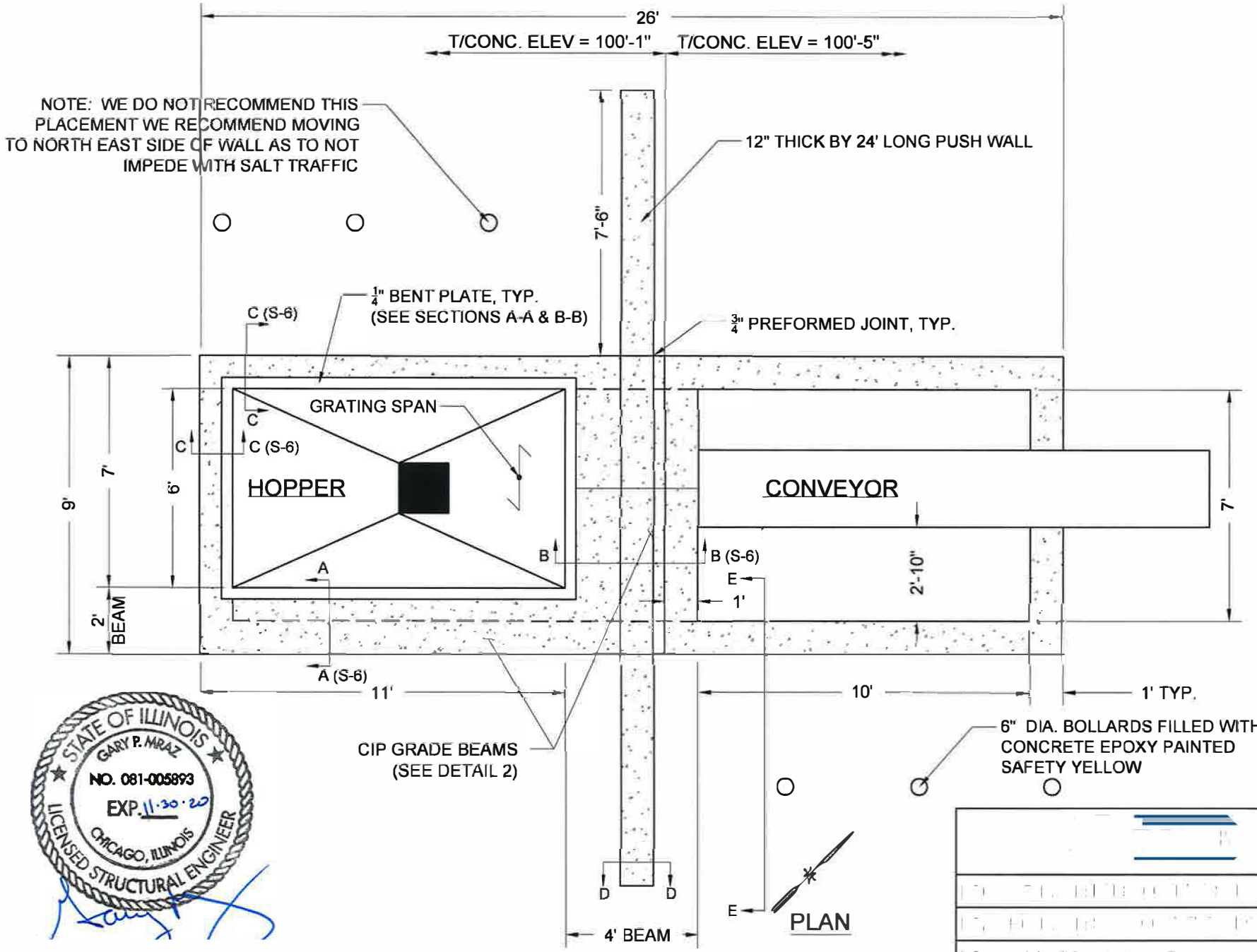

STATE OF ILLINOIS
GARY P. MRAZ
NO. 081-005893
EXP. 11-30-20
CHICAGO, ILLINOIS
LICENSED STRUCTURAL ENGINEER

NOTES:
1. FOR GENERAL NOTES, SEE DRAWING S-1.
2. EXISTING GRADE REFERENCE ELEV. APPROX. = 100'-0"

DRAWING NO.: S-2

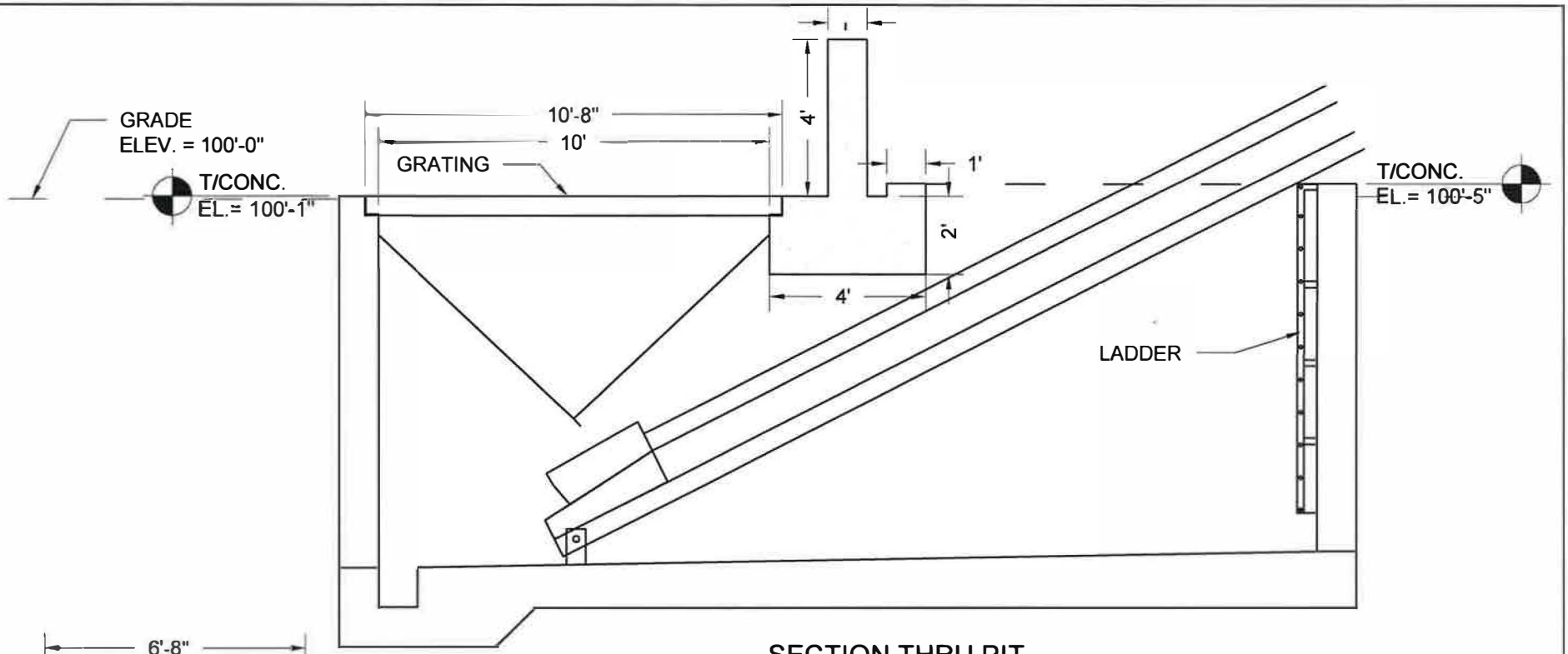

SECTION THRU PIT
(LOOKING NORTH
WEST)

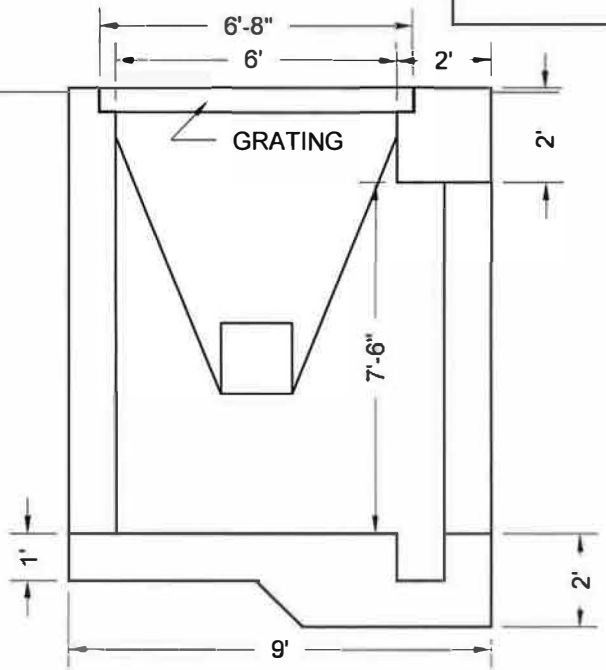

GRADE
ELEV. = 100'-0"

SECTION THRU PIT AT HOPPER
(LOOKING SOUTH WEST)



NOTES:
1. FOR GENERAL NOTES, SEE DRAWING S-1.
2. EXISTING GRADE REFERENCE ELEV. APPROX. = 100'-0"

SCALE: 1/4"=1'

DRAWING NO.: S-3

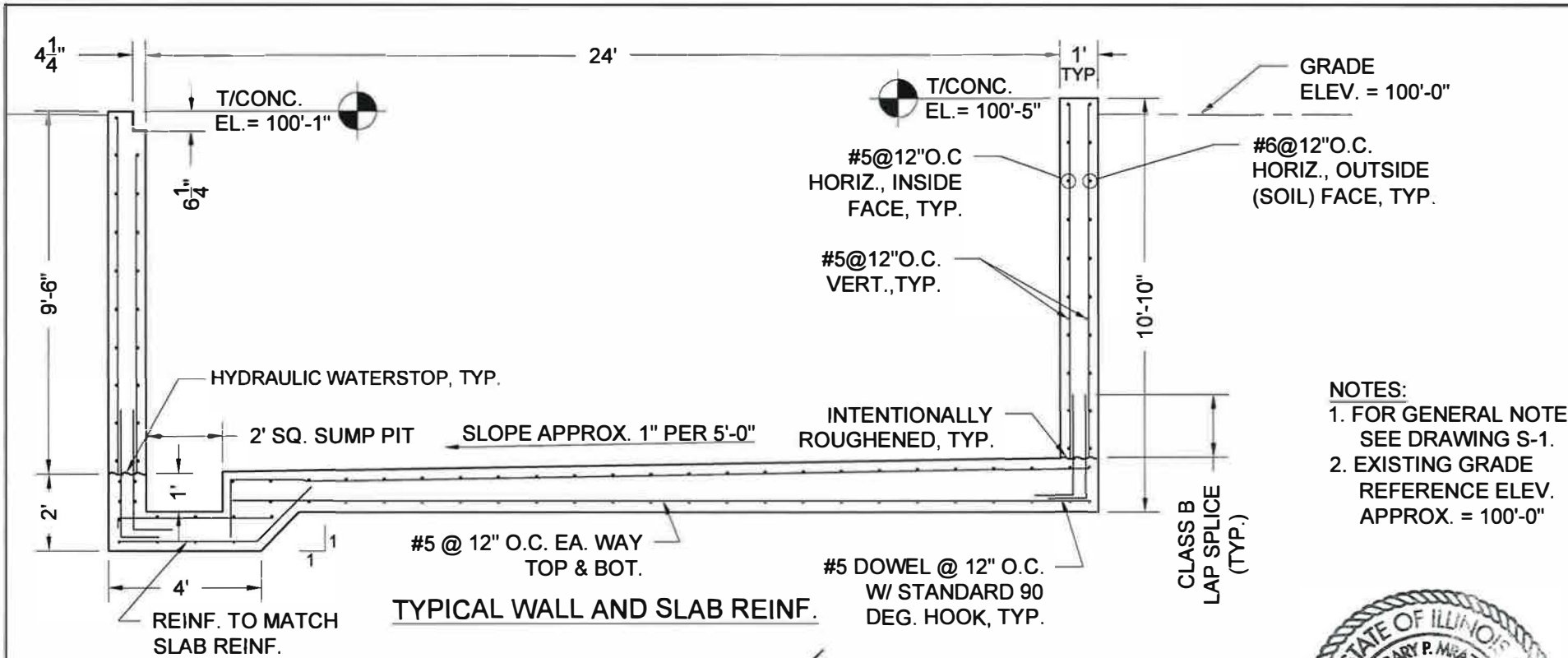

TYPICAL WALL AND SLAB REINF.

NOTES:
1. FOR GENERAL NOTES, SEE DRAWING S-1.
2. EXISTING GRADE REFERENCE ELEV. APPROX. = 100'-0"

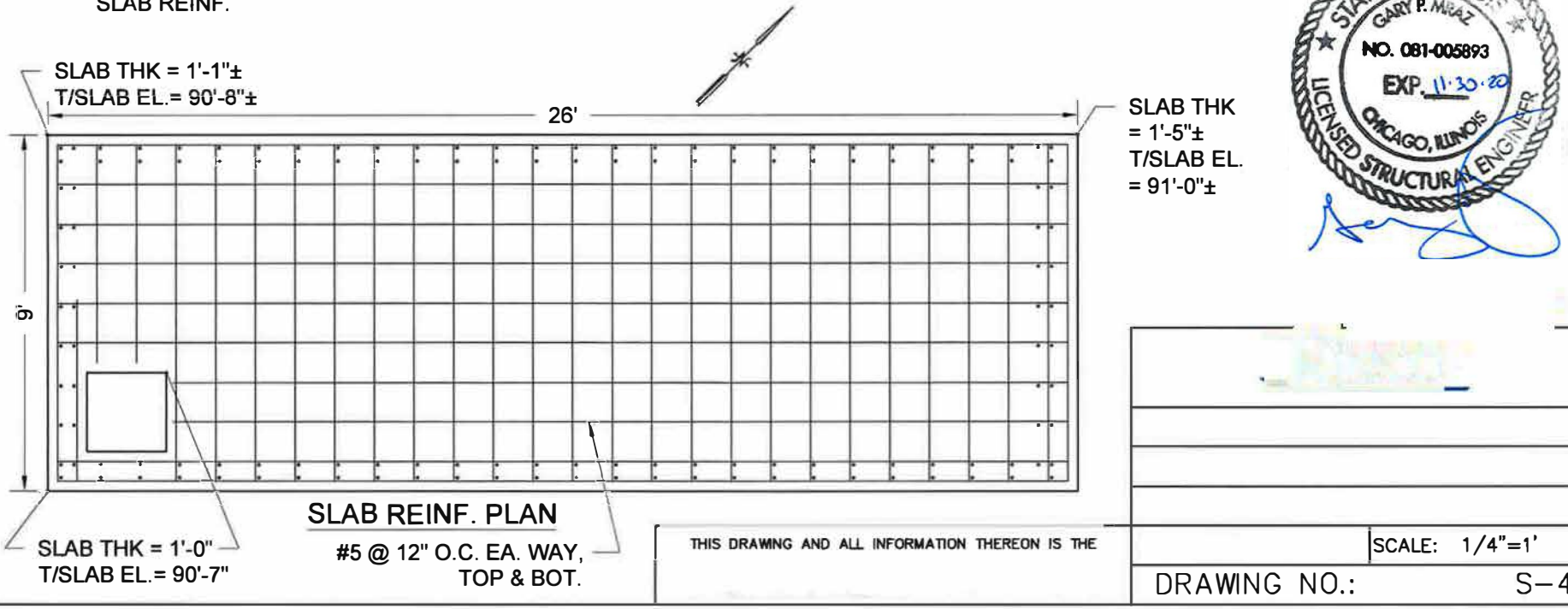

SLAB REINF. PLAN

STATE OF ILLINOIS
GARY P. MIRAZ
NO. 081-005893
EXP. 11·30·20
CHICAGO, ILLINOIS
LICENSED STRUCTURAL ENGINEER

THIS DRAWING AND ALL INFORMATION THEREON IS THE

SCALE: 1/4"=1'

DRAWING NO.: S-4

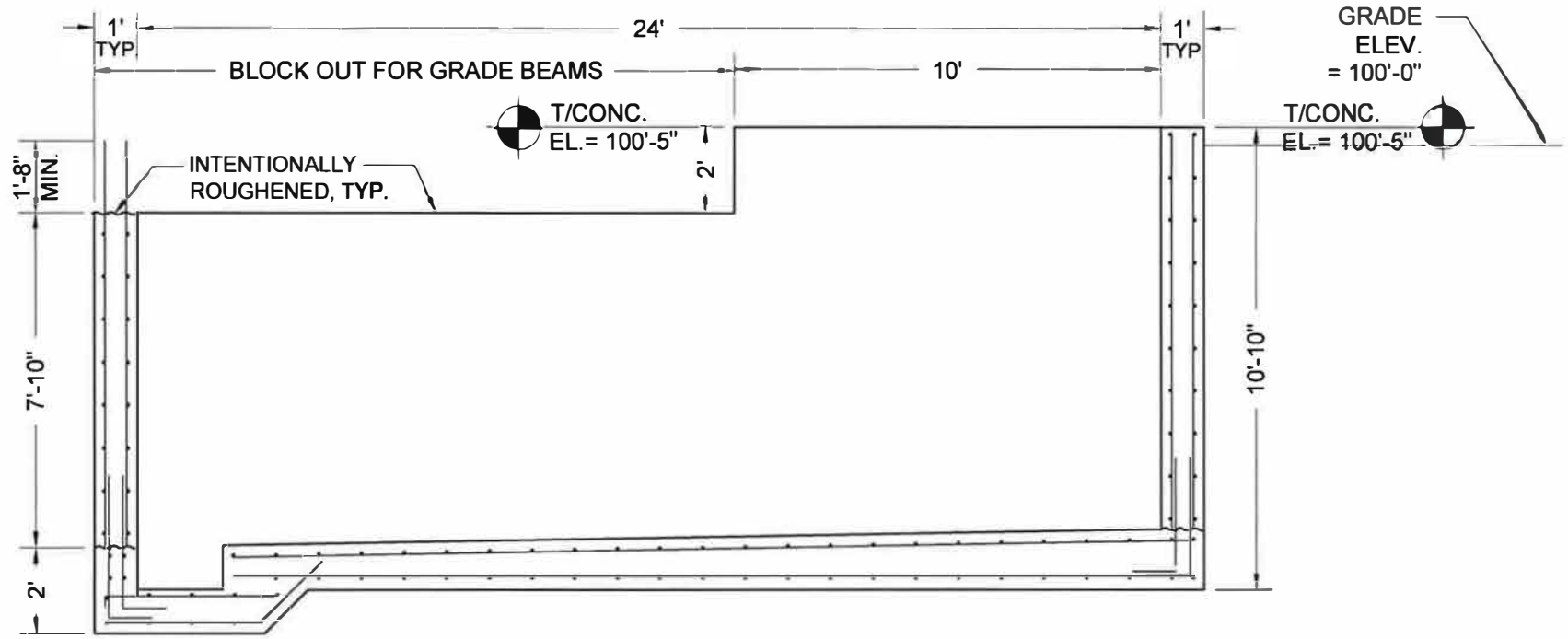

WALL BLOCKOUT FOR GRADE BEAMS

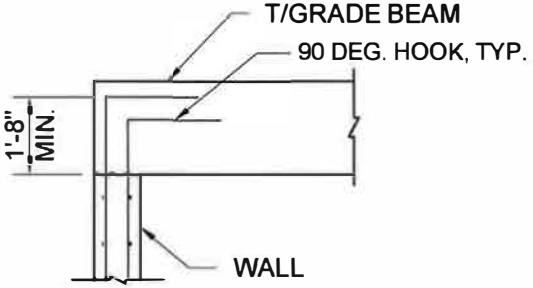

TYPICAL BAR EXTENSION DETAIL AT GRADE BEAMS

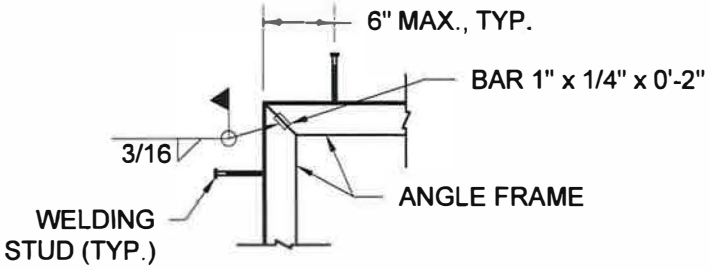

EMBEDDED PLATE TYPICAL CORNER DETAIL



NOTES:
1. FOR GENERAL NOTES, SEE DRAWING S-1.
2. EXISTING GRADE REFERENCE ELEV. APPROX. = 100'-0"

SCALE: NONE

DRAWING NO.: S-5

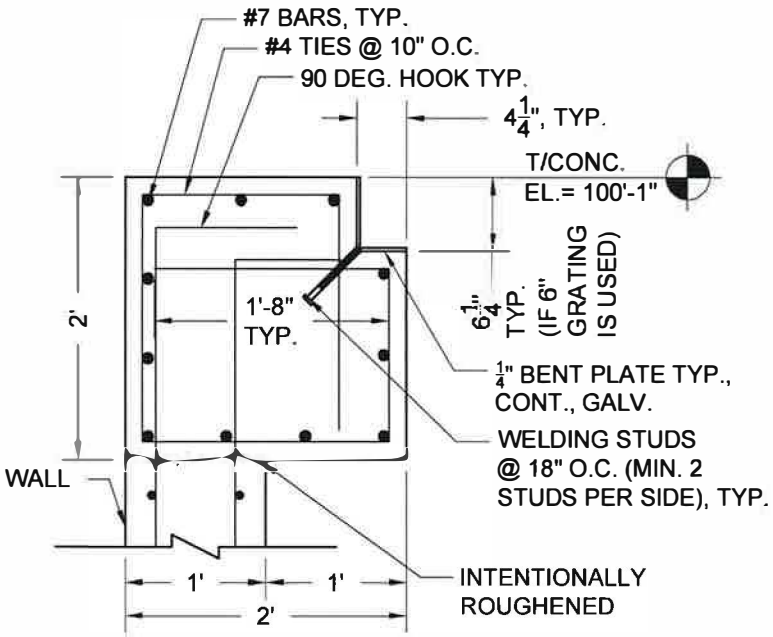

SECTION A-A: 2'X2' GRADE BEAM

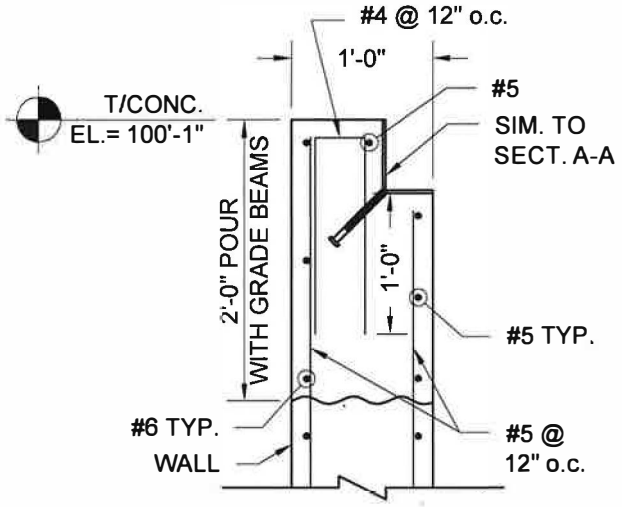

SECTION C-C

NOTES:
1. FOR GENERAL NOTES, SEE DRAWING S-1.
2. EXISTING GRADE REFERENCE ELEV. APPROX. = 100'-0"

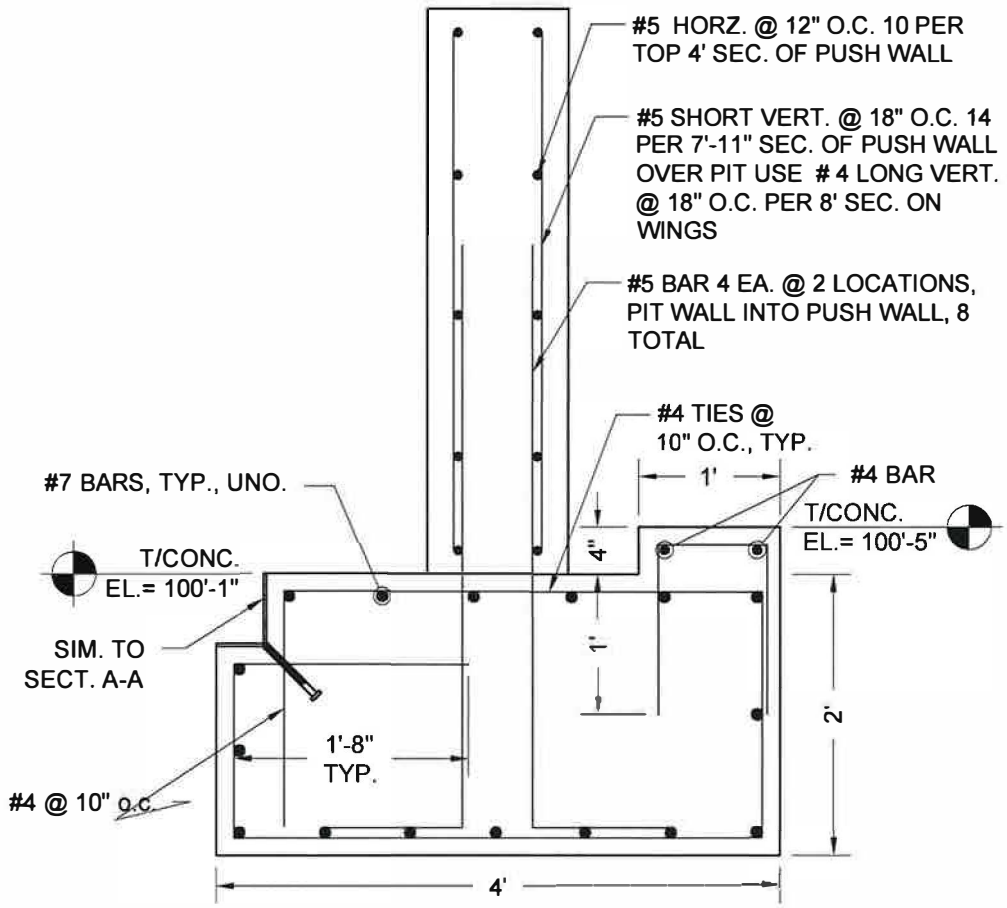

SECTION B-B: 4'X2' GRADE BEAM



SCALE: 3/4"=1'

DRAWING NO.: S-6

CONVEYOR SIDE HOPPER SIDE

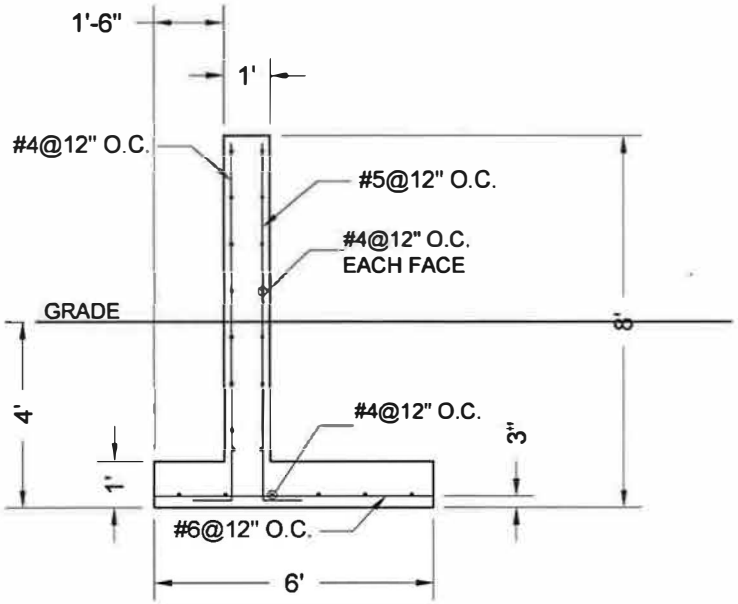

SECTION D-D

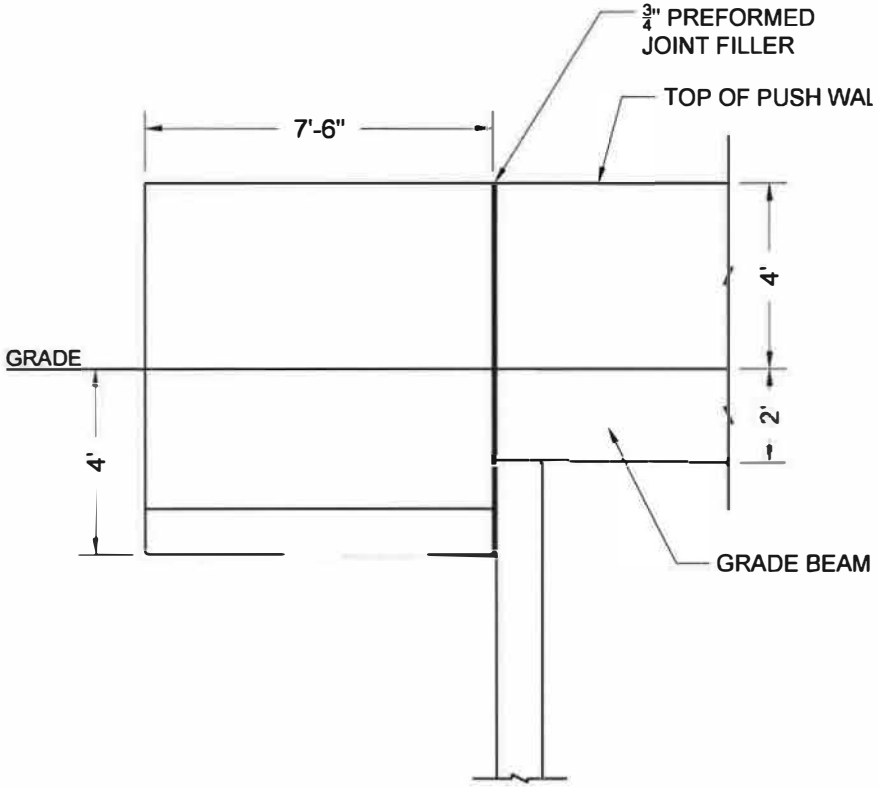

SECTION E-E



SCALE: NONE

DRAWING NO.: S-7

PLAN VIEW

NOTES:
1. STANDARD 90 DEG. HOOK
   = 7½" FOR #5 BARS
   = 9" FOR #6 BARS
2. CLASS B LAP SPLICE
   = 28" FOR #5 BARS
   = 33" FOR #6 BARS
   (IF MULTIPLE BAR SIZES, USE THE LONGER LAP SPLICE)

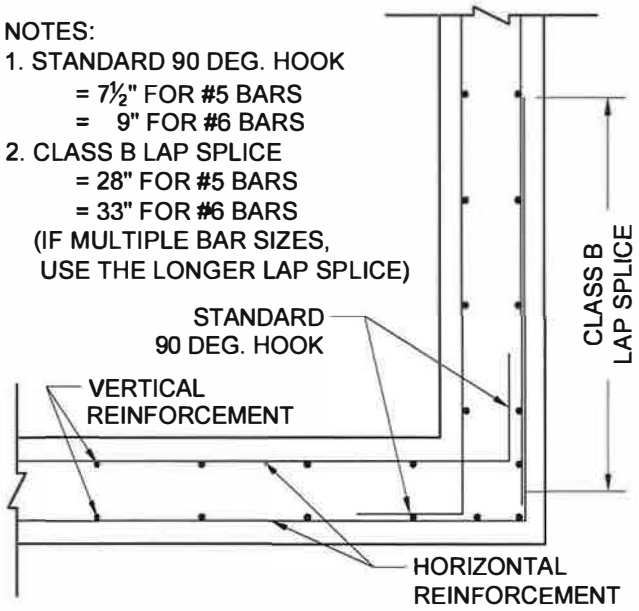

TYPICAL WALL CORNER REINFORCEMENT

(SCALE: NOT TO SCALE)

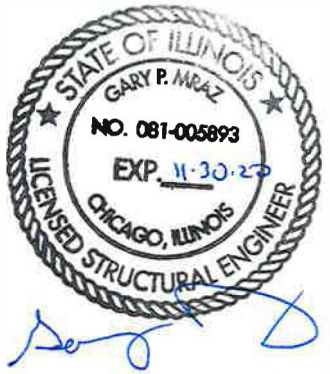

SCALE: 3/4"=1'

DRAWING NO.: S-8

VILLAGE OF SCHAUMBURG

AGENDA ITEM SUMMARY

Recommendation to Approve an Intergovernmental Agreement for the Traffic Signal Enhancements at Roselle Road and Hartford Drive with the Cook County Department of Transportation and Highways
04/14/26
Village Board

Presenter: Justin Briski, Superintendent of Field Services
Lead Department: Engineering and Public Works

Account(s):	Budget:	Expense Request:
1014020-7405	$35,167	$35,167

The budget status for this request is: On Budget

Executive Summary:

The Intergovernmental Agreement (IGA) between Cook County and the Village of Schaumburg outlines the Village's financial responsibilities for the Roselle Road and Hartford Drive Traffic Signal Replacement Project. The Village is only responsible for the aesthetic enhancements requested, including the decorative sidewalk installation and the powder-coated black traffic signal. The Village must also fund 15% of the construction engineering costs associated with these items. The total estimated cost for these components is $35,167.

The Roselle Road and Hartford Drive Traffic Signal Replacement Project will modernize the existing intersection to enhance safety, accessibility, and operational performance. Work includes replacing the full traffic signal system including poles, mast arms, signal heads, controller cabinet, wiring, pedestrian countdown signals, pedestrian pushbuttons, vehicle detection, and relocating the existing emergency vehicle preemption equipment. The project also updates pavement markings and incorporates the decorative paver sidewalk and black powder-coated colored signal equipment. These improvements address aging infrastructure, improve ADA compliance, and bring the intersection up to current standards.

Upon project completion, the Village will assume 50% of the ongoing maintenance and electrical energy costs for the new traffic signal system. In addition, the Village is fully responsible for all future repainting of the traffic signal including warranty-related work using IDOT prequalified electrical contractors, in addition to maintenance of the decorative pavers. These obligations ensure proper long-term maintenance of the shared traffic signal infrastructure and the Village-requested aesthetic improvements.

Recommended Action:

The Village Manager recommends the Engineering and Public Works Committee recommend the Village Board authorize the Village President and Village Clerk to execute an agreement for the Traffic

Signal Enhancements at Roselle Road and Hartford Drive with the Cook County Department of Transportation and Highways, and approve the required Resolution.

ATTACHMENTS:

- Resolution
- Intergovernmental Agreement
- Engineering Plans

RESOLUTION NO. R-26-_____

A RESOLUTION AUTHORIZING THE VILLAGE PRESIDENT AND VILLAGE CLERK TO EXECUTE AN AGREEMENT FOR TRAFFIC SIGNAL ENHANCEMENTS AT ROSELLE ROAD AND HARTFORD DRIVE WITH THE COOK COUNTY DEPARTMENT OF TRANSPORTATION AND HIGHWAYS

WHEREAS, the President and Board of Trustees wish to enter into an Intergovernmental Agreement for the Traffic Signal Enhancements at Roselle Road and Hartford Drive with the Cook County Department of Transportation and Highways; and

WHEREAS, the Village of Schaumburg (the "Village") is a municipality lawfully organized and existing under the Constitution and the laws of the State of Illinois; and

WHEREAS, it would be in the best interests of the citizens of Schaumburg to execute the attached Agreement, Exhibit "A".

NOW, THEREFORE, BE IT RESOLVED BY THE PRESIDENT AND BOARD OF TRUSTEES OF THE VILLAGE OF SCHAUMBURG:

SECTION ONE: That the Village President and Village Clerk be and hereby are authorized and directed to execute the attached Agreement, Exhibit "A", between the Village of Schaumburg and Cook County Department of Transportation and Highways.

SECTION TWO: That the Village President and Village Clerk be and hereby are authorized to sign any documents in furtherance of this Resolution.

SECTION THREE: That this Resolution shall be in full force and effect after passage and approval as required by law.

AYES:

NAYS:

ABSENT:

PASSED AND APPROVED this _____ day of _____, 2026.

_____
Village President

ATTEST:

_____
Village Clerk

INTERGOVERNMENTAL AGREEMENT

County of Cook

Traffic Signal Replacement (HSIP)
Package #2

Roselle Road at Hartford Drive

Village of Schaumburg

Section: 25-HSIP2-00-TL

This Intergovernmental Agreement (Agreement) is made and entered into this _____ day of _____, 2026, by and between the County of Cook, a body politic and corporate of the State of Illinois (County), acting by and through its Department of Transportation and Highways (Department), and the Village of Schaumburg, a municipal corporation of the State of Illinois (Village). The County and Village are sometimes referred to herein individually as a "Party" and collectively as the "Parties."

RECITALS

WHEREAS, in order to facilitate the free flow of traffic and ensure the safety of pedestrians, bicyclists, and the motoring public, the Parties desire to enter into an intergovernmental partnership to realize traffic signal replacement improvements at the intersection of Roselle Road and Hartford Drive (Project);

WHEREAS, the anticipated scope of work for the Project includes, but is not limited to, removal of the existing median and replacement with Portland Cement Concrete (PCC) pavement, replacement of the traffic signal infrastructure including poles, posts, mast arms, cable, conduit, traffic signal heads, cabinet controller, pedestrian pushbuttons, pedestrian signals, and vehicle detection systems, installation of uninterrupted power supply (UPS) battery back-up systems, installation of pedestrian countdown timers and accessible pedestrian signal (APS) pushbuttons at crosswalk termini, pavement marking and signing, relocation of the existing Emergency Vehicle Preemption (EVP) system, and aesthetic enhancements including a black-colored traffic signal system and decorative sidewalk;

WHEREAS, the County has secured federal funding for the Project through the Highway Safety Improvement Program (HSIP) in an amount not to exceed $719,280;

WHEREAS, the County, by virtue of its powers as set forth in the Counties Code, 55 ILCS 5/1-1 et seq., and the Illinois Highway Code, 605 ILCS 5/1-101 et seq., is authorized to enter into this Agreement;

WHEREAS, the Village, by virtue of its powers as set forth in the Illinois Municipal Code, 65 ILCS 5/1-1-1 et seq., is authorized to enter into this Agreement; and

WHEREAS, this Agreement is further authorized under Article VII, Section 10 of the Illinois Constitution and by the provisions of the Intergovernmental Cooperation Act, 5 ILCS 220/1 et seq.

NOW, THEREFORE, in consideration of the mutual covenants contained herein, and for other good and valuable consideration, the receipt of which is hereby acknowledged, the Parties agree as follows:

SECTION 1. CONSTRUCTION

A. Bid Documents

The County shall prepare bid documents for the Project, including, but not limited to, minimum contractor qualifications, plans and specifications, special provisions, and cost estimates.

B. Construction Contract

The County shall award and execute a construction contract for all labor and materials required to complete the Project. In awarding and administering the contract, the County shall comply with all applicable federal, state, and local laws and regulations.

C. Construction Engineering Services

The County shall perform, or cause to be performed, construction engineering services for the Project.

D. Lead Agency

The County shall assume overall responsibility for the Project, including securing all required permits, easements, and agreements from relevant agencies and utility owners before the start of construction.

E. Pre-Construction and Progress Meetings

The County shall provide the Village with at least 14 calendar days' written notice before the pre-construction meeting for the Project and at least 7 calendar days' notice before construction begins. A representative from the Village shall attend the pre-construction meeting and be available for all other construction progress meetings as needed.

F. Public Outreach

The County shall manage all public notification efforts regarding the scope, timing, and duration of the Project.

G. Right of Inspection

The Village and its authorized agents shall have reasonable access for inspection during Project construction, provided such access does not unreasonably interfere with or delay the contractor's work. The County shall cooperate with the Village to address any construction or engineering concerns. Disputes shall be resolved in accordance with Section 5.H. of this Agreement.

H. Final Inspection

The County shall provide the Village with at least 14 calendar days' written notice before the final Project inspection. The Village shall submit final punch list items to the County at least 7 calendar days before the date of the final inspection.

I. Village Permits

The County shall apply for all necessary access and temporary use permits from the Village. The Village shall not unreasonably withhold such permits and shall issue them within a reasonable timeframe (e.g., 30 days) and without charge to the County.

SECTION 2. FINANCIAL

A. Cost Estimate

Estimated construction and construction engineering costs for the Project are $993,799.

B. HSIP Grant Funds

The Project has been awarded federal funding through the Highway Safety Improvement Program (HSIP) in an amount not to exceed $719,280. All HSIP grant funds received shall reduce the County's net Project costs.

C. County Cost Participation

The County shall pay all actual construction and construction engineering costs for the Project, less any HSIP grant funds allocated to and received by the County, and subject to reimbursement by the Village as provided herein.

D. Village Cost Participation

The Village shall reimburse the County for the following Project costs:

i. All actual costs associated with the installation of decorative sidewalk;

ii. All actual costs associated with powder coating the new traffic signal system to achieve the black-colored aesthetic enhancement; and

iii. Related construction engineering costs for the work set forth above in this subsection 2.D., which shall be calculated as 15% of the actual construction/installation costs that are to be reimbursed to the County by the Village.

The total estimated cost to the Village under this Agreement is $35,167.

E. Village Reimbursement

The Village shall reimburse the County for the Village's share of Project costs as funds are expended by the County. The County may seek reimbursement from the Village not more frequently than on a monthly basis. The Village shall pay invoices from the County within 45 calendar days of receipt thereof.

F. Substitutions/Substitute Work

Either Party may request in writing that bid work or materials be substituted with different work or materials. Provided that the substitute work and/or materials do not unreasonably delay the Project schedule, the County shall cause said substitute work

and/or materials to be included in the Project. Each Party shall pay the costs of substitutions for their associated work items.

G. Additional Work

Either Party may request in writing that additional work be added to the Project. Provided that the additional work does not unreasonably delay the Project schedule, the County shall cause said additional work and/or materials to be included in the Project. Additional work shall be paid for by force account or agreed unit price. Each Party shall pay the costs of additional work for their associated work items.

H. Funding Breakdown

An estimated funding breakdown for the Project is incorporated into and made a part of this Agreement and attached as Exhibit A.

SECTION 3. TERM AND TERMINATION

A. Term

This Agreement shall commence as of the date of final execution by both Parties and shall continue until completion of the Project and final reimbursement to the County by the Village.

B. Termination

This Agreement may be terminated prior to the expiration of its term by mutual agreement of the Parties in a writing signed by the Department's Superintendent and an authorized representative of the Village. This Agreement may also be terminated by either Party upon 90 calendar days' written notice sent to the other Party in accordance with Section 5.T. of this Agreement. If the Village elects to terminate this Agreement prior to its expiration, the Village shall pay the County for its share of Project costs spent or incurred by the County up to the date such notice is provided to the County by the Village.

SECTION 4. POST-PROJECT MAINTENANCE

A. Definition

As used herein, the terms 'maintenance' or 'maintain' mean keeping the facility being maintained in safe, functional, and code-compliant condition, with good and sufficient structural integrity, operational performance, and aesthetic appearance. Such

maintenance includes both preventive and corrective activities and full responsibility for the construction, removal, and/or replacement of the maintained facility and associated infrastructure when needed, all in accordance with applicable standards, codes, and regulations

B. Bicycle and Pedestrian Facilities

Upon completion of the Project, the Village shall own, operate, and maintain all sidewalks and/or multi-use paths constructed or improved as part of the Project, in compliance with the Americans with Disabilities Act, Public Right-of-Way Accessibility Guidelines, and all other applicable federal and state laws and regulations. Such facilities include the decorative paver sidewalk at the intersection of Roselle Road and Hartford Drive.

The Village shall defend, indemnify, and hold harmless the County, its commissioners, officials, officers, employees, agents, and representatives from and against any and all costs, expenses, attorneys' fees, losses, damages, claims, demands, suits, actions, or proceedings of any kind arising out of or relating to the use, repair, and/or maintenance of all sidewalks and/or multi-use paths constructed or improved as part of the Project, including the decorative paver sidewalk at the intersection of Roselle Road and Hartford Drive.

C. EVP System

Upon completion of the Project, the Village shall own and be responsible for 100% of the maintenance costs for the EVP system relocated on the traffic signals at the intersection of Roselle Road and Hartford Drive. The Village acknowledges that it will not have access to or on the traffic signals at these locations. The County shall monitor the operational status of the EVP system at no cost to the Village, and the County shall inform the Village should it detect fault with the operation of the EVP system. In the event the County detects fault with the operation of any EVP system, the Village shall enter into an agreement with a contractor prequalified by the Illinois Department of Transportation (IDOT) in the Electrical category, for repair or removal and replacement of the EVP system.

D. Roadways

Upon completion of the Project, the County shall continue to own, operate, and maintain those portions of Roselle Road under its established jurisdictional authority, including, but not limited to, any existing or future County-owned traffic signals, signage, pavement markings, landscaping seed and sod, storm sewers and/or drainage facilities on the

County right-of-way, but excluding landscaping beyond seed and sod (e.g., trees and shrubs) and any Village-owned utilities on the County right-of-way (e.g., sanitary sewer and water main).

Upon completion of the Project, the Village shall continue to own, operate, and maintain those portions of Hartford Drive under its established jurisdictional authority, including, but not limited to, any existing or future Village-owned utilities, signage, pavement markings, landscaping, storm sewers and/or other drainage facilities on the Village right-of-way. The Village shall also own and maintain any landscaping beyond seed and sod (e.g., trees and shrubs) along Roselle Road and any Village-owned utilities on the County right-of-way (e.g., sanitary sewer and water main).

E. Traffic Signals

Upon completion of the Project, the County shall own, operate, energize, and maintain the traffic signals at the intersection of Roselle Road and Hartford Drive, including any interconnect system components.

The financial responsibilities of the Parties for maintenance and electrical energy costs for the operation of these traffic signals are as follows:

Party	***Maintenance***	***Electrical Energy***
Cook County	50%	50%
Village of Schaumburg	50%	50%

The Village shall pay its share of maintenance costs for the traffic signals directly to the County. The Village shall pay its share of electrical energy costs for the traffic signals directly to ComEd. Payment for the maintenance costs shall be due within 30 calendar days of receipt of the quarterly statement issued to the Village by the County.

F. Traffic Signal Painting Requirements

Village Financial Responsibilities

The Village assumes full financial responsibility (100%) for all painting-related costs for the traffic signal at Roselle Road and Hartford Drive, including:

- Initial painting/powder coating of the proposed traffic signal installation
- All future painting and maintenance of traffic signal equipment
- Warranty repair work and related claims
- Painting/powder coating of replacement traffic signal components

Contractor Requirements

For all future painting work, touch-ups, and painting-related repairs, the Village must engage contractors who are prequalified by IDOT in the Electrical category and the Village must secure a permit from CCDOTH. All new equipment must be galvanized on both interior and exterior surfaces prior to painting, in accordance with current County traffic signal specifications.

County Oversight and Standards

The County retains comprehensive oversight authority, including the right to:

- Inspect all preparation and painting processes
- Reject unsatisfactory workmanship
- Replace damaged equipment with standard County traffic signal materials
- Require of the Village repainting of any installation or component deemed necessary, or removal of the paint as determined by the County.

Response Timeline

Upon notification of required painting work, the Village has 30 calendar days to issue a work order. All work must be performed by IDOT-prequalified contractors in the Electrical category.

Equipment Specifications

- **Standard Color:** All traffic signal equipment shall be painted black
- **Exceptions:** The following components shall remain unpainted:
    - Traffic signal control cabinets
    - Traffic signal heads
    - Pedestrian signal head latching devices: If these latching devices are painted and the doors cannot be opened, or if the latching devices break off during use as a result of being painted, the Village will be responsible to hire an IDOT prequalified contractor in the Electrical category to replace any impacted piece of traffic signal equipment (e.g., cabinet, signal head, pedestrian signal head)

G. Survives Termination

The Parties' maintenance obligations described in this section shall survive termination or expiration of this Agreement.

SECTION 5. GENERAL CONDITIONS

A. Audit and Document Retention

Each Party, to the extent applicable, shall maintain adequate books, records, and supporting documentation related to this Agreement and any associated expenditures for at least 3 years after its completion. Such records shall be available for review and audit by the other Party and their respective internal or external auditors. The Parties shall cooperate fully with any audit and provide access to all relevant materials.

B. Binding Agreement

This Agreement shall bind and benefit the Parties and their permitted successors and assigns. No Party may assign its obligations under this Agreement without the prior express written consent of the other Party, which shall not be unreasonably withheld or delayed.

C. Compliance with Laws, Rules, and Regulations

Each Party shall comply with all applicable federal, state, and local laws, rules, and regulations, as amended from time to time, in performing its obligations under this Agreement.

D. Conflict with Exhibits

In the event of a conflict between the text of this Agreement and any attached exhibit, the text of the Agreement shall prevail.

E. Cooperation

The County and Village agree to cooperate fully with one another at all times in the implementation of this Agreement.

F. Counterparts

This Agreement may be executed in counterparts, each of which shall be deemed an original. All such counterparts together shall constitute one and the same instrument.

G. County Section Number

The Project is designated as County section number 25-HSIP2-00-TL. All Project-related submittals and correspondence shall reference this County section number.

H. Dispute Resolution

If a dispute, claim, or disagreement arises from the performance of this Agreement, the Parties shall consult in good faith to resolve it. If resolution cannot be reached, the decision of the Department's Superintendent shall be final and binding, unless otherwise provided by law.

I. Effective Date

The Effective Date of this Agreement shall be the date it is fully executed by authorized signatories of both Parties and approved by their respective corporate authorities.

J. Electronic or Digital Signatures

This Agreement may be executed by electronic or digital signatures, which shall have the same legal effect as handwritten signatures, pursuant to the Uniform Electronic Transactions Act (815 ILCS 333/1 et seq.) or any successor law.

K. Entire Agreement

This Agreement represents the complete understanding between the Parties regarding its subject matter and supersedes all prior agreements or understandings.

L. Force Majeure

Neither Party shall be liable for failing to fulfill any obligation under this Agreement due to events beyond their reasonable control and not caused by such their fault or negligence, including, but not limited to, acts of God, war, natural disasters, labor actions, epidemics, pandemics, or civil unrest.

M. Governing Law and Venue

This Agreement shall be governed exclusively by the laws of the State of Illinois. The Parties irrevocably submit to the exclusive jurisdiction of the Circuit Court of Cook County or the U.S. District Court for the Northern District of Illinois for any proceedings arising from this Agreement.

N. Interpretation

Headings are for reference only and do not affect the meaning of the provisions. References to exhibits or documents include any lawful amendments or supplements. References to persons or entities include successors in accordance with this Agreement.

O. Liability

Subject to Section 4.A. herein, no official, officer, employee, attorney, agent, or assign of either Party will be liable for any negligent or wrongful act chargeable to the other unless such liability is imposed by a court of competent jurisdiction. The County assumes no liability for the actions of the Village and its officials, officers, employees, attorneys, or agents under this Agreement. The Village assumes no liability for the actions of the County and its officials, officers, employees, attorneys, or agents under this Agreement. Each Party agrees to be solely responsible for liability, suits, losses, judgments, damages, or other demands imposed upon it as a result of its own actions or omissions in the performance of its obligations specified in this Agreement. In the event of a claim for any wrongful or negligent act, each Party will bear the cost of its own defense.

P. Modifications

No change or modification to this Agreement shall be valid unless made in writing and signed by the Department's Superintendent and an authorized representative of the Village.

Q. No Individual or Personal Liability

Actions and representations under this Agreement are taken in official capacities only, and no individual affiliated with either Party shall incur personal liability in connection with the Agreement.

R. No Third-Party Beneficiaries

This Agreement is solely between the Parties and does not create any rights or obligations for third parties, including agents, contractors, or consultants of either Party.

S. Notices

All notices under this Agreement shall be in writing and delivered personally, by U.S. Mail (certified, registered, or first-class) or via electronic mail to the following:

To the County:
Cook County Department of Transportation and Highways
Superintendent
Attn: Jennifer "Sis" Killen, P.E., PTOE
69 W. Washington Street, 24th Floor
Chicago, IL 60602
E-mail: jennifer.killen@cookcountyil.gov

To the Village:
Village of Schaumburg
Director of Engineering and Public Works
Attn: Mike Hall
714 S. Plum Grove Road
Schaumburg, IL 60193
E-mail: mhall@schaumburg.com

T. Recitals

The recitals at the beginning of this Agreement are incorporated herein and form an integral part of the Agreement.

U. Severability

If any provision of this Agreement is deemed invalid or unenforceable, the remainder shall remain in full force and effect, and the invalid portion shall be interpreted to best reflect the original intent of the Parties.

V. Waivers of Default

No waiver of a breach or provision shall be effective unless in writing, nor shall it be construed as a waiver of any future breach or provision.

W. Warranties and Representations

Each Party represents and warrants that it is duly authorized to execute and perform this Agreement in accordance with its terms.

(signature page to follow)

IN WITNESS WHEREOF, the Parties have executed this Agreement on the dates indicated.

EXECUTED BY COUNTY OF COOK:

_____
Toni Preckwinkle
President
Cook County Board of Commissioners

This _____ day of _____, _____

ATTEST: _____
County Clerk

EXECUTED BY VILLAGE OF SCHAUMBURG:

_____
Tom Dailly
Mayor

This _____ day of _____, _____

ATTEST: _____
Village Clerk

RECOMMENDED BY:

_____
Jennifer "Sis" Killen, P.E., PTOE
Superintendent
County of Cook
Department of Transportation and Highways

APPROVED AS TO FORM:
Eileen O'Neill Burke, State's Attorney

By: _____
Assistant State's Attorney

Exhibit A

Estimated Funding Breakdown for Roselle Rd. and Hartford Dr.

ITEM	HSIP GRANT	VILLAGE	COUNTY	TOTAL
Construction	$719,280	$30,580	$114,313	$864,173
Construction Engineering	-	$4,587	$125,039	$129,626
Total	$719,280	$35,167	$239,352	$993,799

100% SUBMITTAL
JANUARY 23, 2026

STATE OF ILLINOIS
COUNTY OF COOK
DEPARTMENT OF TRANSPORTATION AND HIGHWAYS

TRAFFIC SIGNAL REPLACEMENT (HSIP) PACKAGE #2

LAKE COOK ROAD AT OLD HICKS ROAD
ROSELLE ROAD AT HARTFORD DRIVE
ROBERTS ROAD AT 103RD STREET
VOLLMER ROAD AT RIDGELAND AVENUE
SECTION 23-HSIP2-00-TL
FEDERAL PROJECT NO.: TBD
STATE JOB NO.: TBD

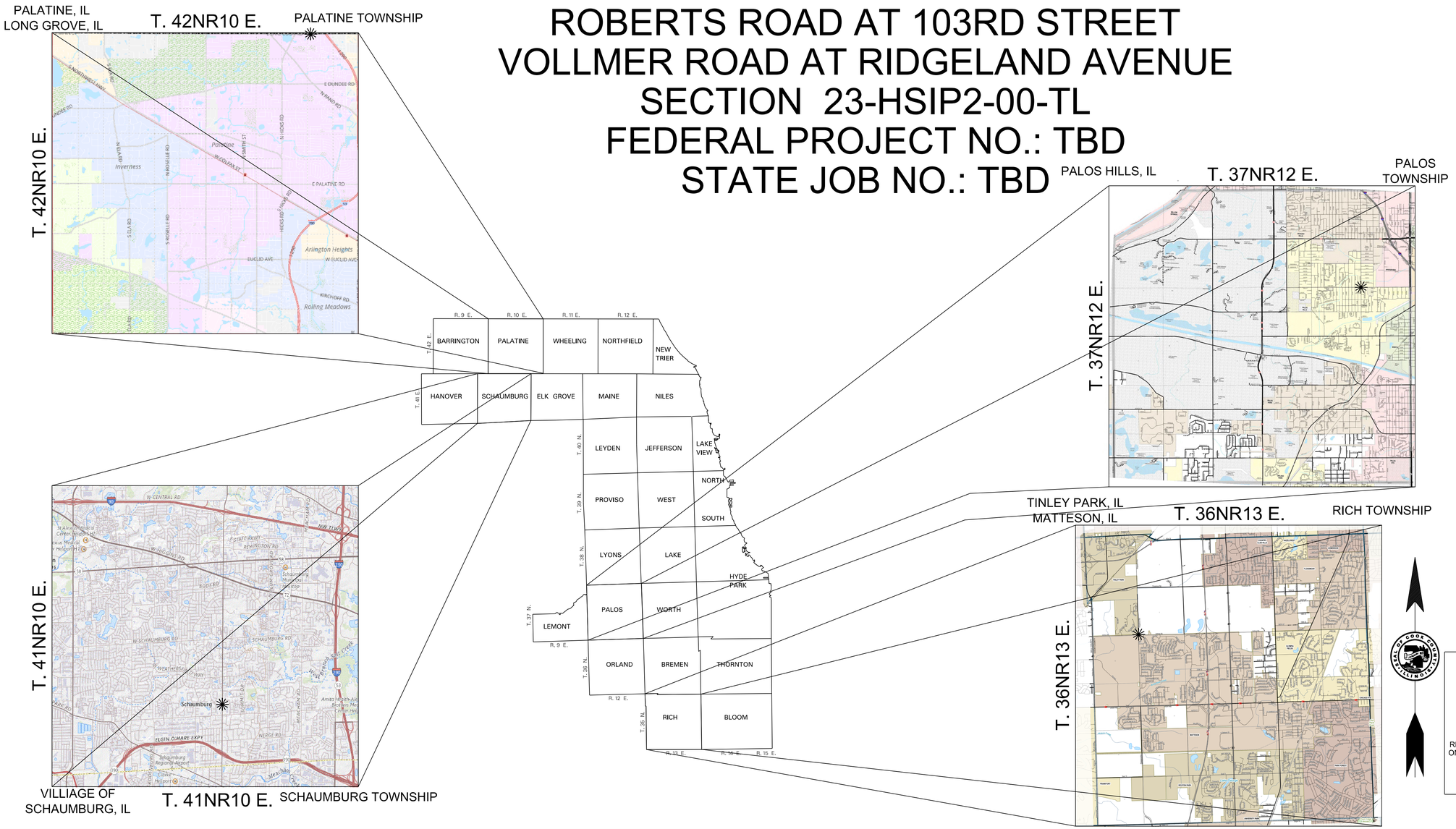

LAKE COOK RD
DESIGN DESIGNATION - SRA
ADT (2022) - 39,000 - (PORTLAND CEMENT CONCRETE)
DESIGN SPEED 45 M.P.H.
GROSS LENGTH = 2,500 FEET = 0.47 MILES
NET LENGTH = 2,214 FEET = 0.42 MILES

OLD HICKS RD
DESIGN DESIGNATION - LOCAL ROAD
ADT (2022) - 3,600 - (HOT MIX ASPHALT)
DESIGN SPEED 25 M.P.H.
GROSS LENGTH = 300 FEET = 0.06 MILES
NET LENGTH = 262 FEET = 0.05 MILES

HARTFORD DR
DESIGN DESIGNATION - MINOR ARTERIAL
ADT (2019) - 5,100 - (PORTLAND CEMENT CONCRETE)
DESIGN SPEED 25 M.P.H.
GROSS LENGTH = 640 FEET = 0.12 MILES
NET LENGTH = 640 FEET = 0.12 MILES

ROSELLE RD
DESIGN DESIGNATION - MAJOR COLLECTOR
ADT (2019) - 32,300 - (PORTLAND CEMENT CONCRETE)
DESIGN SPEED 50 M.P.H.
GROSS LENGTH = 750 FEET = 0.14 MILES
NET LENGTH = 750 FEET = 0.14 MILES

ROBERTS RD
DESIGN DESIGNATION - MINOR ARTERIAL
AADT (2019) - 23,000 - (PORTLAND CEMENT CONCRETE)
DESIGN SPEED 40 M.P.H.
GROSS LENGTH = 1,060 FEET = 0.20 MILES
NET LENGTH = 1,060 FEET = 0.20 MILES

103RD ST
DESIGN DESIGNATION - MAJOR COLLECTOR
AADT (2019) - 18,000 - (PORTLAND CEMENT CONCRETE)
DESIGN SPEED 40 M.P.H.
GROSS LENGTH = 1,415 FEET = 0.27 MILES
NET LENGTH = 1,415 FEET = 0.27 MILES

VOLLMER RD
DESIGN DESIGNATION - MINOR ARTERIAL
ADT (2019) - 10,600 - (PORTLAND CEMENT CONCRETE)
DESIGN SPEED 50 M.P.H.
GROSS LENGTH = 975 FEET = 0.18 MILES
NET LENGTH = 975 FEET = 0.18 MILES

RIDGELAND AVE
DESIGN DESIGNATION - MAJOR COLLECTOR
ADT (2019) - 4,700 - (PORTLAND CEMENT CONCRETE)
DESIGN SPEED 50 M.P.H.
GROSS LENGTH = 840 FEET = 0.16 MILES
NET LENGTH = 840 FEET = 0.16 MILES

THE CONTRACTOR'S ATTENTION IS DIRECTED
TO TELEPHONE J. U. L. I. E. AT 1-800-892-0123
FOR ALL UTILITY LOCATIONS

COUNTY OF COOK
DEPARTMENT OF TRANSPORTATION AND HIGHWAYS

APPROVED _____ 20__

_____

APPROVED _____ 20__

_____
CHIEF ENGINEER OF DESIGN

APPROVED _____ 20__

_____
SUPERINTENDENT

STATE OF ILLINOIS
DEPARTMENT OF TRANSPORTATION

PASSED _____ 20__

_____
DISTRICT ENGINEER OF LOCAL ROADS AND STREETS

RELEASED FOR BID
ON LIMITED REVIEW _____ 20__

_____
REGION 1 ENGINEER

1/16/2026

$FILE_DATE_TIME$

COUNTY HIGHWAY:	B45/W32
FISCAL YEAR:	2024
SECTION:	19-TCIDS-00-ES

COUNTY OF COOK
DEPARTMENT OF TRANSPORTATION AND HIGHWAYS

COMPUTED:
DRAWN: DB
CHECKED: CB

REVISIONS | DATE

COVER SHEET

SCALE: NTS SHEET: 1

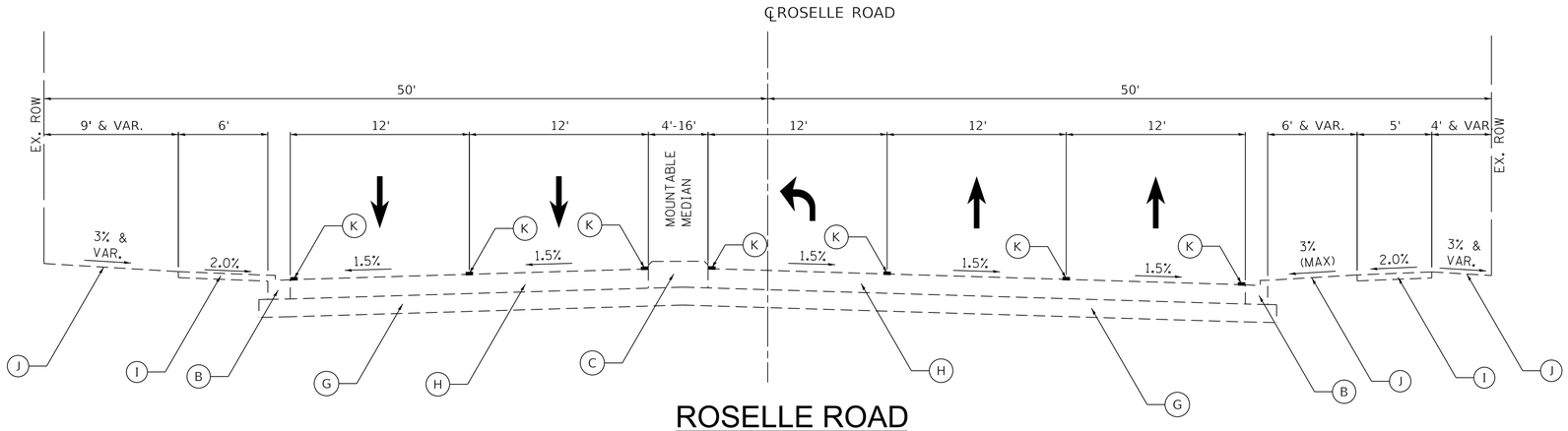

ROSELLE ROAD
EXISTING TYPICAL SECTION
STA. 22+00.20 TO STA. 29+43.58
LOOKING NORTH

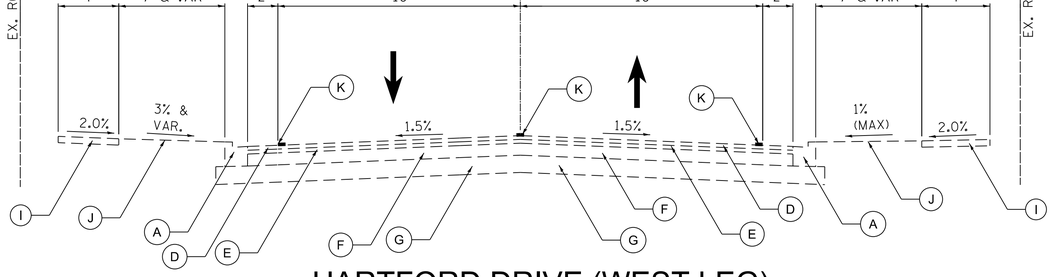

HARTFORD DRIVE (WEST LEG)
EXISTING TYPICAL SECTION
STA. 47+35.72 TO STA. 50+00.00
LOOKING EAST

EXISTING LEGEND

- (A) EXISTING CURB & GUTTER, TYPE M-2.12
- (B) EXISTING CURB & GUTTER, TYPE B-6.24
- (C) EXISTING MOUNTABLE MEDIAN
- (D) EXISTING HOT-MIX ASPHALT SURFACE COURSE, VARIES 1 1/4" TO 1 3/4"
- (E) EXISTING HOT-MIX ASPHALT SURFACE BINDER, VARIES 3/4" TO 2 3/4"
- (F) EXISTING BITUMINOUS BASE COURSE, VARIES 5.0" TO 10 3/4"
- (G) EXISTING GRANULAR SUB-BASE
- (H) EXISTING P.C.C. PAVEMENT 10.0"
- (I) EXISTING P.C.C. SIDEWALK
- (J) EXISTING LANDSCAPING
- (K) EXISTING MODIFIED URETHANE PAVEMENT MARKING
- (L) EXISTING CLASS B PATCHES, TYPE IV, 10"
- (L) EXISTING PAVEMENT JOINTINGS

PLOT DATE = 1/15/2026 PLOT TIME = 9:46:02 PM
FILE NAME = pw:\\singh-pw.bentley.comsingh-pw-01\Documents\Projects\2022-07\700_CADD\703_Sheet_Files\Roselle & Hartford\1938-17904-RH_sht-Typical01.dgn

	SCHAUMBURG, IL	COUNTY HIGHWAY:	V60	**COUNTY OF COOK** DEPARTMENT OF TRANSPORTATION AND HIGHWAYS	COMPUTED: SA DRAWN: SA CHECKED: CJ	REVISIONS:	DATE:	**ROSELLE RD AND HARTFORD DR** **TYPICAL SECTIONS**	C-20
		FISCAL YEAR:	2024						SCALE: NTS SHEET: 71
		SECTION:	23-HSIP1-00-TL						

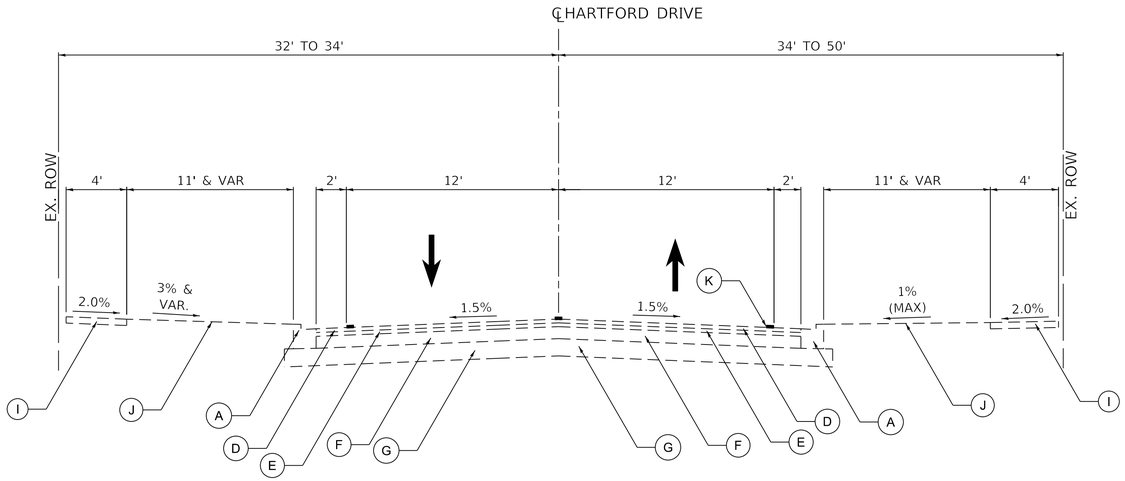

HARTFORD DRIVE (EAST LEG)
EXISTING TYPICAL SECTION
STA. 50+00.00 TO STA. 51+84.06
LOOKING EAST

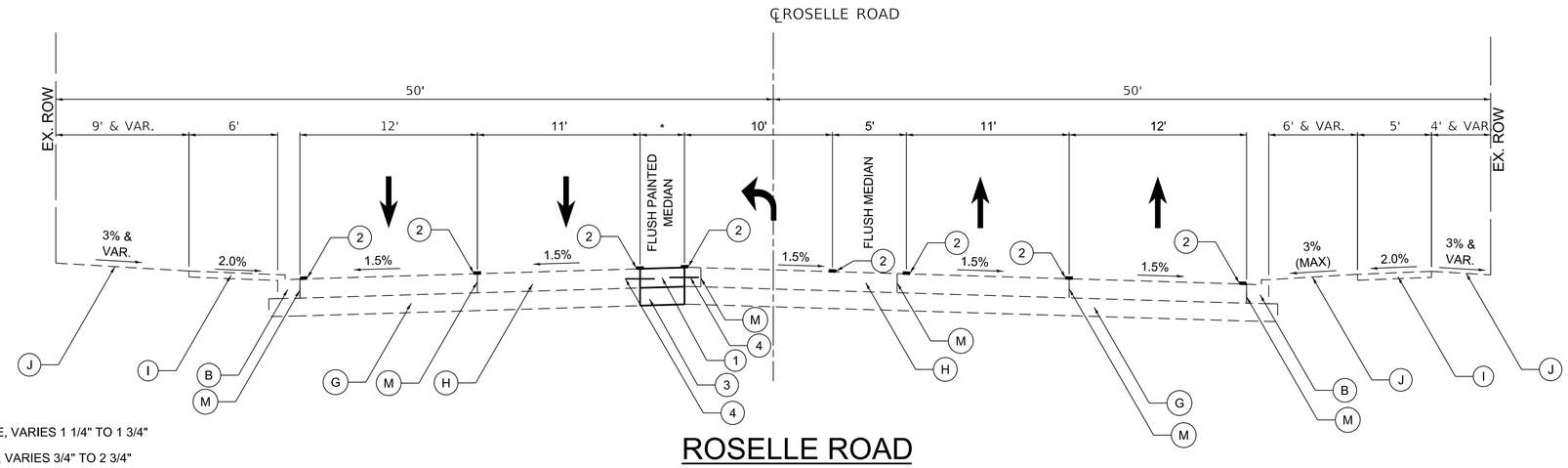

ROSELLE ROAD
PROPOSED TYPICAL SECTION
STA. 20+00.20 TO STA. 29+43.58
LOOKING NORTH

EXISTING LEGEND

- (A) EXISTING CURB & GUTTER, TYPE M-2.12
- (B) EXISTING CURB & GUTTER, TYPE B-6.24
- (C) EXISTING MOUNTABLE MEDIAN
- (D) EXISTING HOT-MIX ASPHALT SURFACE COURSE, VARIES 1 1/4" TO 1 3/4"
- (E) EXISTING HOT-MIX ASPHALT SURFACE BINDER, VARIES 3/4" TO 2 3/4"
- (F) EXISTING BITUMINOUS BASE COURSE, VARIES 5.0" TO 10 3/4"
- (G) EXISTING GRANULAR SUB-BASE
- (H) EXISTING P.C.C. PAVEMENT 10.0"
- (I) EXISTING P.C.C. SIDEWALK
- (J) EXISTING LANDSCAPING
- (K) EXISTING MODIFIED URETHANE PAVEMENT MARKING
- (L) EXISTING CLASS B PATCHES, TYPE IV, 10"
- (M) EXISTING PAVEMENT JOINTINGS

PROPOSED LEGEND

- (1) PROPOSED P.C.C. PAVEMENT, 10"
- (2) MODIFIED URETHANE PAVEMENT MARKING
- (3) PROPOSED AGGREGATE SUBGRADE IMPROVEMENT, 12"
- (4) #6 TIE BARS, 24" LONG @ 24' C-C (INCIDENTAL)

NOTE:

* - VARIES 3' TO 15.5'

PLOT DATE = 1/15/2026 PLOT TIME = 9:46:11 PM
FILE NAME = pw:\\singh-pw.bentley.com:singh-pw-01\Documents\Projects\23027-07\700_CADD\703_Sheet_Files\Roselle & Hartford\1938-17904-RH_sht-typical02.dgn

SCHAUMBURG, IL	COUNTY HIGHWAY:	V60	COUNTY OF COOK DEPARTMENT OF TRANSPORTATION AND HIGHWAYS	COMPUTED: SA DRAWN: SA CHECKED: CJ	REVISIONS:	DATE:	ROSELLE RD AND HARTFORD DR TYPICAL SECTIONS	C-21
	FISCAL YEAR:	2024						SCALE: NTS SHEET: 72
	SECTION:	23-HSIP1-00-TL						

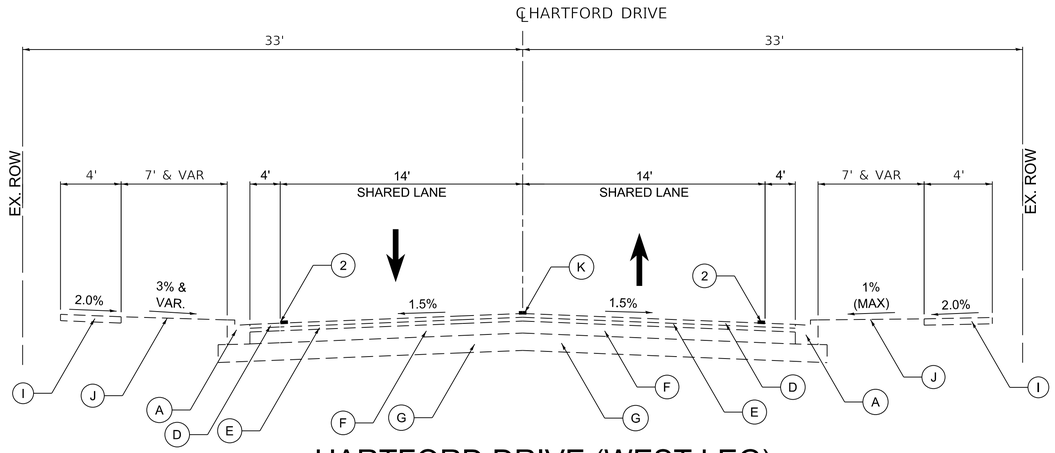

HARTFORD DRIVE (WEST LEG)
PROPOSED TYPICAL SECTION
STA. 47+35.72 TO STA. 50+00.00
LOOKING EAST

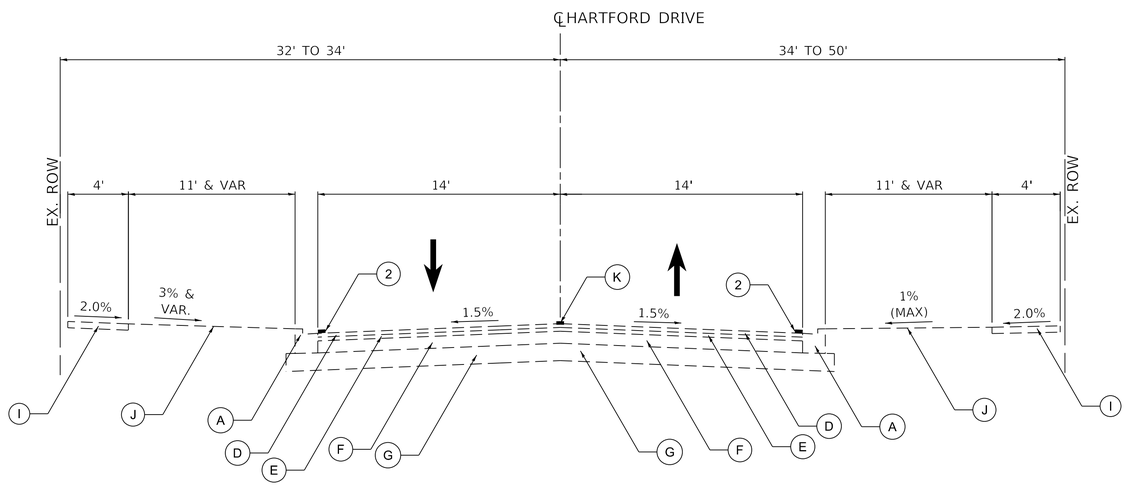

HARTFORD DRIVE (EAST LEG)
PROPOSED TYPICAL SECTION
STA. 50+00.00 TO STA. 51+84.06
LOOKING EAST

EXISTING LEGEND

- (A) EXISTING CURB & GUTTER, TYPE M-2.12
- (B) EXISTING CURB & GUTTER, TYPE B-6.24
- (C) EXISTING MOUNTABLE MEDIAN
- (D) EXISTING HOT-MIX ASPHALT SURFACE COURSE, VARIES 1 1/4" TO 1 3/4"
- (E) EXISTING HOT-MIX ASPHALT SURFACE BINDER, VARIES 3/4" TO 2 3/4"
- (F) EXISTING BITUMINOUS BASE COURSE, VARIES 5.0" TO 10 3/4"
- (G) EXISTING GRANULAR SUB-BASE
- (H) EXISTING P.C.C. PAVEMENT 10.0"
- (I) EXISTING P.C.C. SIDEWALK
- (J) EXISTING LANDSCAPING
- (K) EXISTING MODIFIED URETHANE PAVEMENT MARKING
- (L) EXISTING CLASS B PATCHES, TYPE IV, 10"
- (M) EXISTING PAVEMENT JOINTINGS

PROPOSED LEGEND

- (1) PROPOSED P.C.C. PAVEMENT, 10"
- (2) MODIFIED URETHANE PAVEMENT MARKING
- (3) PROPOSED AGGREGATE SUBGRADE IMPROVEMENT, 12"
- (4) #6 TIE BARS, 24" LONG @ 24' C-C (INCIDENTAL)

PLOT DATE = 1/15/2026 PLOT TIME = 9:48:19 PM
FILE NAME = pw:\\singh-pw.bentley.com:singh-pw-01\Documents\Projects\23027-07\700.CADD\703_Sheet_Files\Roselle & Hartford\1938-17904-RH_sht-Typical03.dgn

SCHAUMBURG, IL	COUNTY HIGHWAY:	V60	COUNTY OF COOK DEPARTMENT OF TRANSPORTATION AND HIGHWAYS	COMPUTED: SA DRAWN: SA CHECKED: CJ	REVISIONS:	DATE:	ROSELLE RD AND HARTFORD DR TYPICAL SECTIONS	C-22
	FISCAL YEAR:	2024						SCALE: NTS SHEET: 73
	SECTION:	23-HSIP1-00-TL						

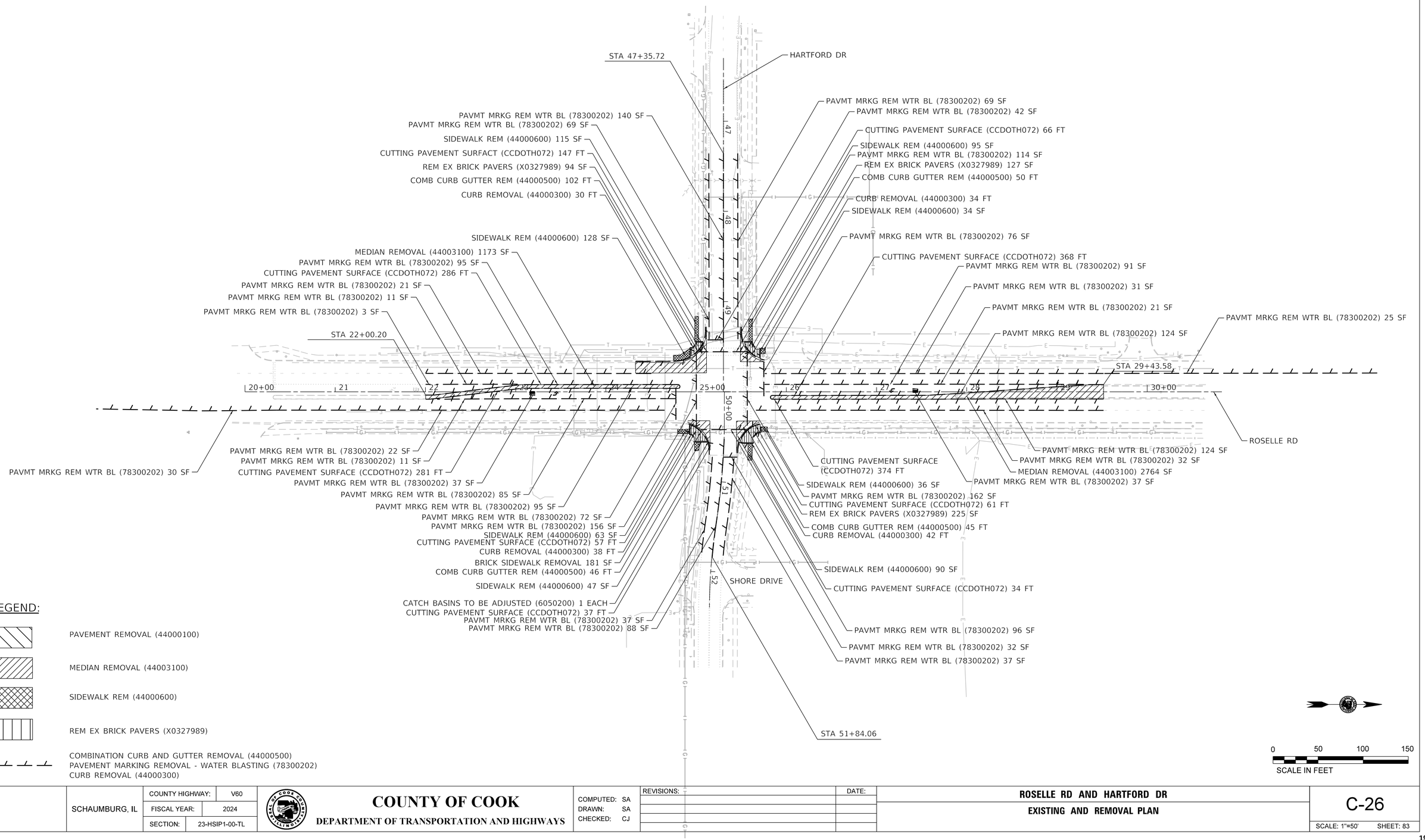

PLOT DATE = 1/15/2026 PLOT TIME = 9:48:28 PM
FILE NAME = pw:\\singh-pw.bentley.com:singh-pw-01\Documents\Projects\23027-07\700_CADD\703_Sheet_Files\Roselle & Hartford\1938-17004-RH_sht-REM01.dgn

SCHAUMBURG, IL	COUNTY HIGHWAY:	V60	**COUNTY OF COOK** DEPARTMENT OF TRANSPORTATION AND HIGHWAYS	COMPUTED: SA DRAWN: SA CHECKED: CJ	REVISIONS:	DATE:	**ROSELLE RD AND HARTFORD DR** **EXISTING AND REMOVAL PLAN**	C-26
	FISCAL YEAR:	2024						SCALE: 1"=50' SHEET: 83
	SECTION:	23-HSIP1-00-TL						

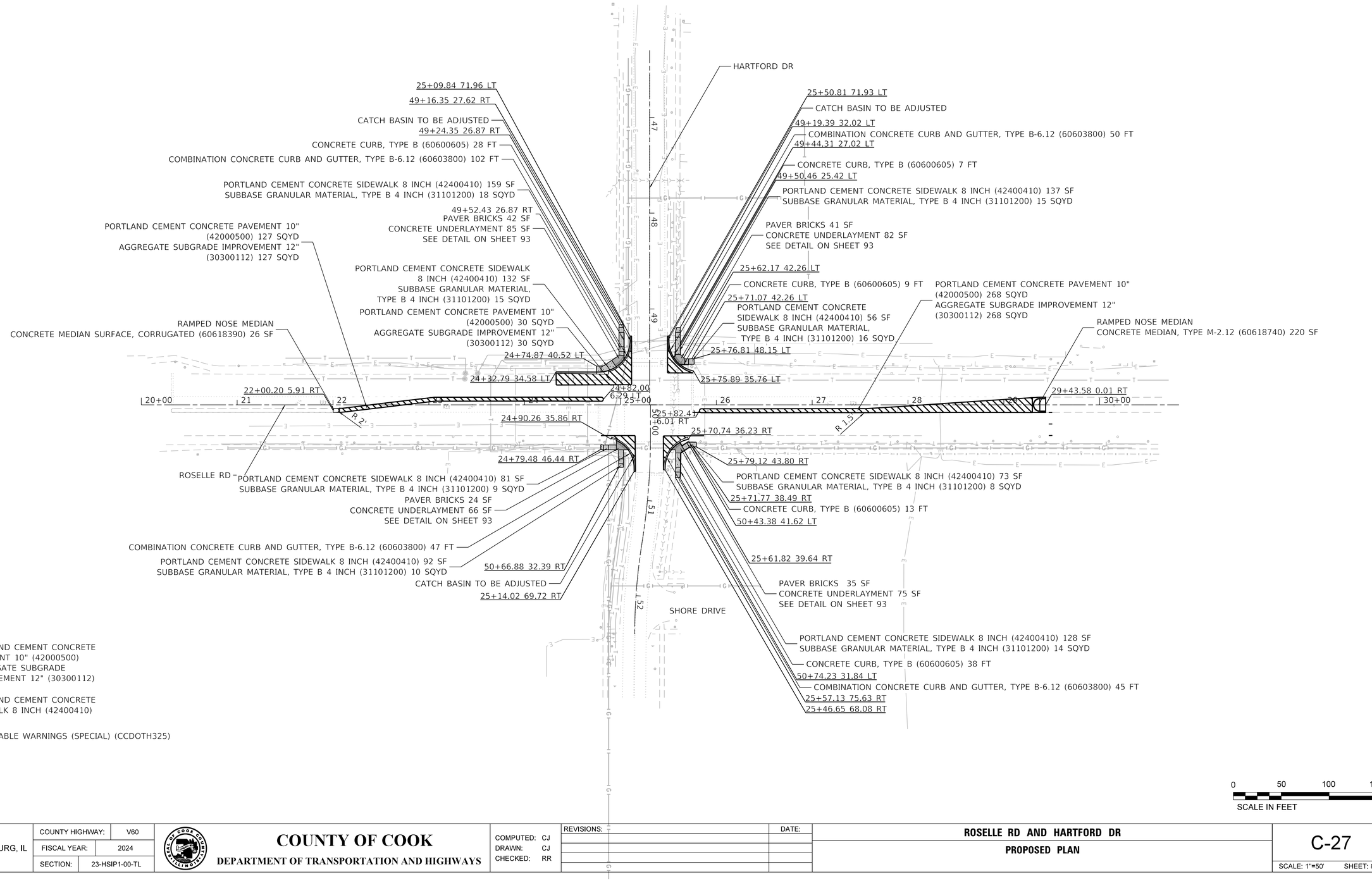

PLOT DATE = 1/16/2026 PLOT TIME = 11:49:54 AM
FILE NAME = pw:\\singh-pw.bentley.com:singh-pw-01\Documents\Projects\23027-07\700_CADD\703_Sheet_Files\Roselle & Hartford\1938-17904-RH_sht-Design01.dgn

	SCHAUMBURG, IL	COUNTY HIGHWAY:	V60	COUNTY OF COOK DEPARTMENT OF TRANSPORTATION AND HIGHWAYS	COMPUTED: CJ DRAWN: CJ CHECKED: RR	REVISIONS:	DATE:	ROSELLE RD AND HARTFORD DR PROPOSED PLAN	C-27
		FISCAL YEAR:	2024						SCALE: 1"=50' SHEET: 84
		SECTION:	23-HSIP1-00-TL						

HARTFORD DRIVE & ROSELLE ROAD

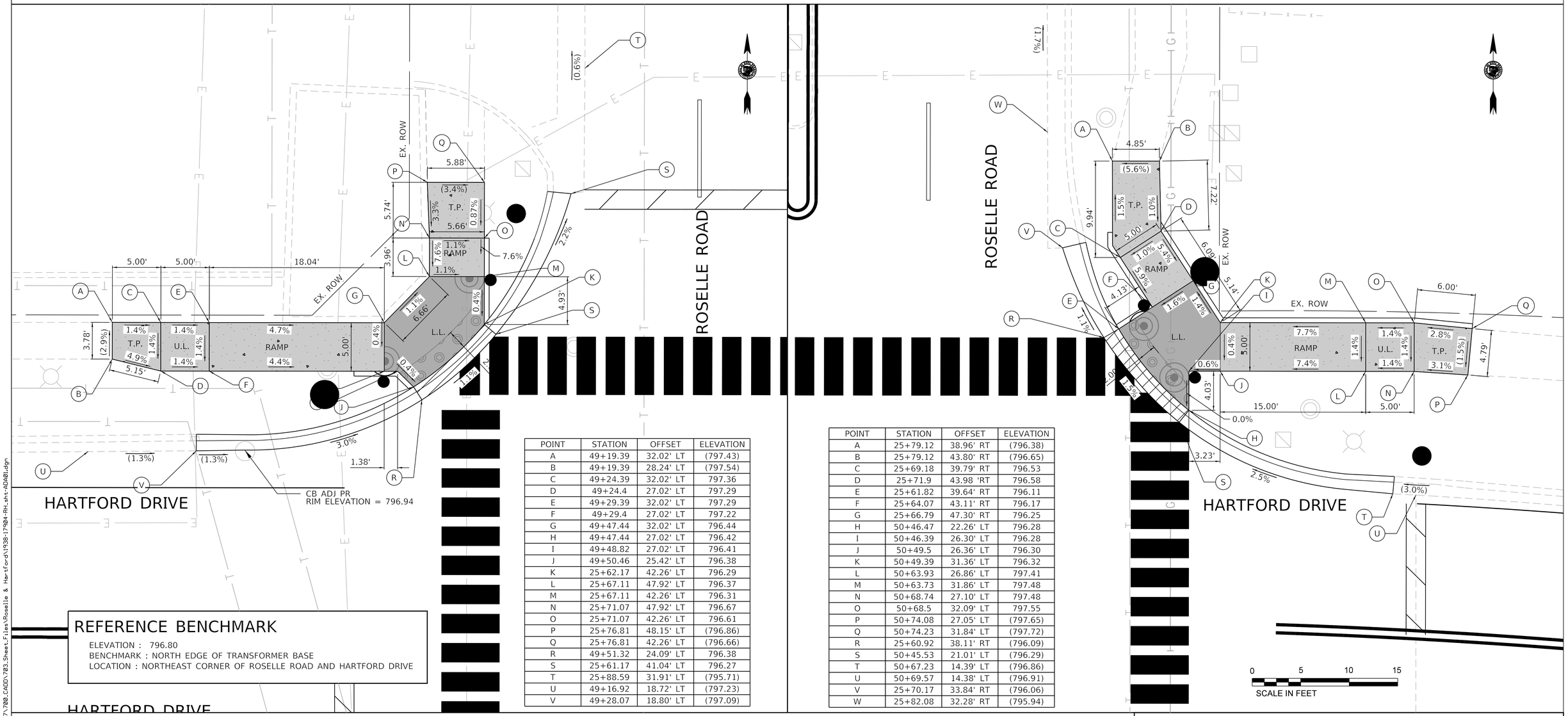

POINT	STATION	OFFSET	ELEVATION
A	49+19.39	32.02' LT	(797.43)
B	49+19.39	28.24' LT	(797.54)
C	49+24.39	32.02' LT	797.36
D	49+24.4	27.02' LT	797.29
E	49+29.39	32.02' LT	797.29
F	49+29.4	27.02' LT	797.22
G	49+47.44	32.02' LT	796.44
H	49+47.44	27.02' LT	796.42
I	49+48.82	27.02' LT	796.41
J	49+50.46	25.42' LT	796.38
K	25+62.17	42.26' LT	796.29
L	25+67.11	47.92' LT	796.37
M	25+67.11	42.26' LT	796.31
N	25+71.07	47.92' LT	796.67
O	25+71.07	42.26' LT	796.61
P	25+76.81	48.15' LT	(796.86)
Q	25+76.81	42.26' LT	(796.66)
R	49+51.32	24.09' LT	796.38
S	25+61.17	41.04' LT	796.27
T	25+88.59	31.91' LT	(795.71)
U	49+16.92	18.72' LT	(797.23)
V	49+28.07	18.80' LT	(797.09)

POINT	STATION	OFFSET	ELEVATION
A	25+79.12	38.96' RT	(796.38)
B	25+79.12	43.80' RT	(796.65)
C	25+69.18	39.79' RT	796.53
D	25+71.9	43.98 'RT	796.58
E	25+61.82	39.64' RT	796.11
F	25+64.07	43.11' RT	796.17
G	25+66.79	47.30' RT	796.25
H	50+46.47	22.26' LT	796.28
I	50+46.39	26.30' LT	796.28
J	50+49.5	26.36' LT	796.30
K	50+49.39	31.36' LT	796.32
L	50+63.93	26.86' LT	797.41
M	50+63.73	31.86' LT	797.48
N	50+68.74	27.10' LT	797.48
O	50+68.5	32.09' LT	797.55
P	50+74.08	27.05' LT	(797.65)
Q	50+74.23	31.84' LT	(797.72)
R	25+60.92	38.11' RT	(796.09)
S	50+45.53	21.01' LT	(796.29)
T	50+67.23	14.39' LT	(796.86)
U	50+69.57	14.38' LT	(796.91)
V	25+70.17	33.84' RT	(796.06)
W	25+82.08	32.28' RT	(795.94)

REFERENCE BENCHMARK

ELEVATION : 796.80
BENCHMARK : NORTH EDGE OF TRANSFORMER BASE
LOCATION : NORTHEAST CORNER OF ROSELLE ROAD AND HARTFORD DRIVE

CONSTRUCTION NOTES

1.) WHERE ADA/PROWAG REQUIREMENTS CANNOT BE MET BY MODIFYING STANDARD DESIGN ELEMENT, THE GUTTER FLAG CROSS SLOPE CAN BE MODIFIED FROM -6% (-5% ADJUSTED FOR CURB RAMP) TO -2% TO ACHIEVE A PEDESTRIAN ACCESS ROUTE CROSS SLOPE OF LESS THAN 2%. ANY FLOW SHALL BE DIRECTED AWAY FROM THE CURB RAMP OR TO AN EXISTING STRUCTURE. ELEVATIONS AT EDGE OF PAVEMENT, FLOW LINE, AND BACK OF CURB SHALL BE NOTED.

2.) WHERE THE EDGE OF PAVEMENT ELEVATION HAS CHANGED FROM RAMP MODIFICATIONS OR DUE TO POOR CONDITION, THE ADJACENT PAVEMENT SHALL BE PATCHED WITH THE SAME TYPE AND DEPTH OF PAVEMENT ALREADY EXISTING. THE PATCH SHALL BE A FULL LANE WIDTH WITH SAW CUTS AT LANE LINES AND PERPENDICULAR TO THE DIRECTION OF TRAFFIC.

3.) SIDEWALK JOINTS SHALL BE 5-FOOT ON CENTER UNLESS OTHERWISE SHOWN ON PLANS.

4.) STATION AND OFFSET CALLOUTS ARE BASED ON ROSELLE ROAD AND HARTFORD DR CENTERLINES.

5.) ALL PEDESTRIAN PUSH BUTTON LOCATIONS SHALL FOLLOW THE GUIDELINES FROM ADA/PROWAG.

6.) THE LOCATION OF THE PEDESTRIAN PUSH BUTTON MUST BE PARALLEL TO THE CROSSWALK.

7.) COORDINATION BETWEEN THE ELECTRICAL CONTRACTOR AND SIDEWALK CONTRACTOR IS REQUIRED BEFORE THE SIDEWALK CONSTRUCTION. THE CONTRACTOR SHALL CONTACT CCDOTH AT 312-603-1734.

8.) A PEDESTRIAN PUSH BUTTON EXTENSION MAY BE NEEDED FOR THE ACCESSIBILITY AND CORRECT ALIGNMENT OF PEDESTRIAN PUSH BUTTON. THE EXTENSION SHALL BE INCLUDED IN COST OF THE PAY ITEM "PEDESTRIAN PUSH BUTTON"

9.) IF PEDESTRIAN PUSH BUTTONS ARE CHANGED DUE TO ADA/PROWAG REQUIREMENTS, THE EXISTING HOLES IN THE POST AND/OR MAST ARM POLE SHALL BE PLUGGED. THIS SHALL BE INCLUDED IN COST OF THE PAY ITEM "PEDESTRIAN PUSH BUTTON".

10.) ADDITIONAL SIDEWALK BEHIND THE TRAFFIC SIGNAL POST/POLE MAY BE NEEDED.

LEGEND

- PROPOSED 8" SIDEWALK
- T.P. TRANSITION PANEL
- ( ) EXISTING ELEVATION/SLOPE
- BRICK PAVEMENT REMOVAL AND REPLACEMENT
- DETECTABLE WARNINGS (SPECIAL)
- U.L. UPPER LANDING
- L.L. LOWER LANDING
- DEPRESSED CURB & GUTTER

SCHAUMBURG, IL

COUNTY HIGHWAY:	V60
FISCAL YEAR:	2024
SECTION:	23-HSIP1-00-TL

COUNTY OF COOK
DEPARTMENT OF TRANSPORTATION AND HIGHWAYS

COMPUTED: CJ
DRAWN: SA
CHECKED: CJ

REVISIONS:	DATE:

ROSELLE RD AND HARTFORD DR
ADA DETAIL SHEET
NORTH

C-28
SCALE: 1"=5' SHEET: 85

PLOT DATE = 1/15/2026 PLOT TIME = 9:48:44 PM
FILE NAME = pw:\\singh-pw.bentley.com:singh-pw-01\Documents\Projects\23027-07\700_CADD\703_Sheet_Files\Roselle & Hartford\1938-17904-Rt-sht-ADA01.dgn

HARTFORD DRIVE & ROSELLE ROAD

POINT	STATION	OFFSET	ELEVATION
A	49+16.35	31.65' RT	(798.59)
B	49+16.35	27.63' RT	(798.64)
C	49+19.35	31.87' RT	798.51
D	49+19.35	26.87' RT	798.48
E	49+24.35	31.87' RT	798.44
F	49+24.35	26.87' RT	798.41
G	49+39.45	31.87' RT	797.39
H	49+39.45	26.87' RT	797.36
I	49+44.45	31.87' RT	797.32
J	49+44.45	26.87' RT	797.29
K	49+48.45	31.87' RT	797.12
L	49+48.45	26.87' RT	797.04
M	49+52.43	26.87' RT	796.97
N	24+90.93	46.48' LT	797.11
O	24+95.37	39.89' LT	797.09
P	24+84.91	42.42' LT	797.28
Q	24+88.87	36.54' LT	797.26
R	24+79.74	40.52' LT	797.31
S	24+79.74	34.52' LT	797.21
T	24+74.87	40.52' LT	797.35
U	24+74.84	34.45' LT	797.24
V	49+53.37	25.59' RT	797.06
W	24+96.25	38.57' LT	796.94
X	24+32.78	32.70' LT	(797.13)
Y	49+28.04	18.78' RT	(797.23)
Z	49+17.56	18.69' RT	(797.43)
A'	24+28.82	32.60' LT	(797.14)

POINT	STATION	OFFSET	ELEVATION
A	24+79.41	41.67' RT	(797.32)
B	24+79.48	46.44' RT	(797.37)
C	24+82.28	41.90' RT	797.09
D	24+82.28	46.90' RT	797.15
E	24+87.28	41.90' RT	797.02
F	24+87.28	46.90' RT	797.08
G	24+95.72	37.49' RT	796.58
H	24+95.72	41.90' RT	796.59
I	24+95.72	46.90' RT	796.61
J	50+47.37	23.46' RT	796.40
K	50+47.46	28.13' RT	796.48
L	50+47.57	33.13' RT	796.57
M	50+57.37	27.87' RT	797.14
N	50+57.55	32.87' RT	797.19
O	50+62.57	27.68' RT	797.21
P	50+62.79	32.68' RT	797.26
Q	50+66.57	27.50' RT	(797.30)
R	50+66.88	32.39' RT	(797.32)
S	24+96.35	36.04' RT	(796.56)
T	50+47.37	23.46' RT	(796.37)
U	50+70.49	14.76' RT	(797.11)
V	50+75.16	14.53' RT	(797.22)
W	24+90.74	33.77' RT	(796.64)
X	24+84.95	32.12' RT	(796.73)

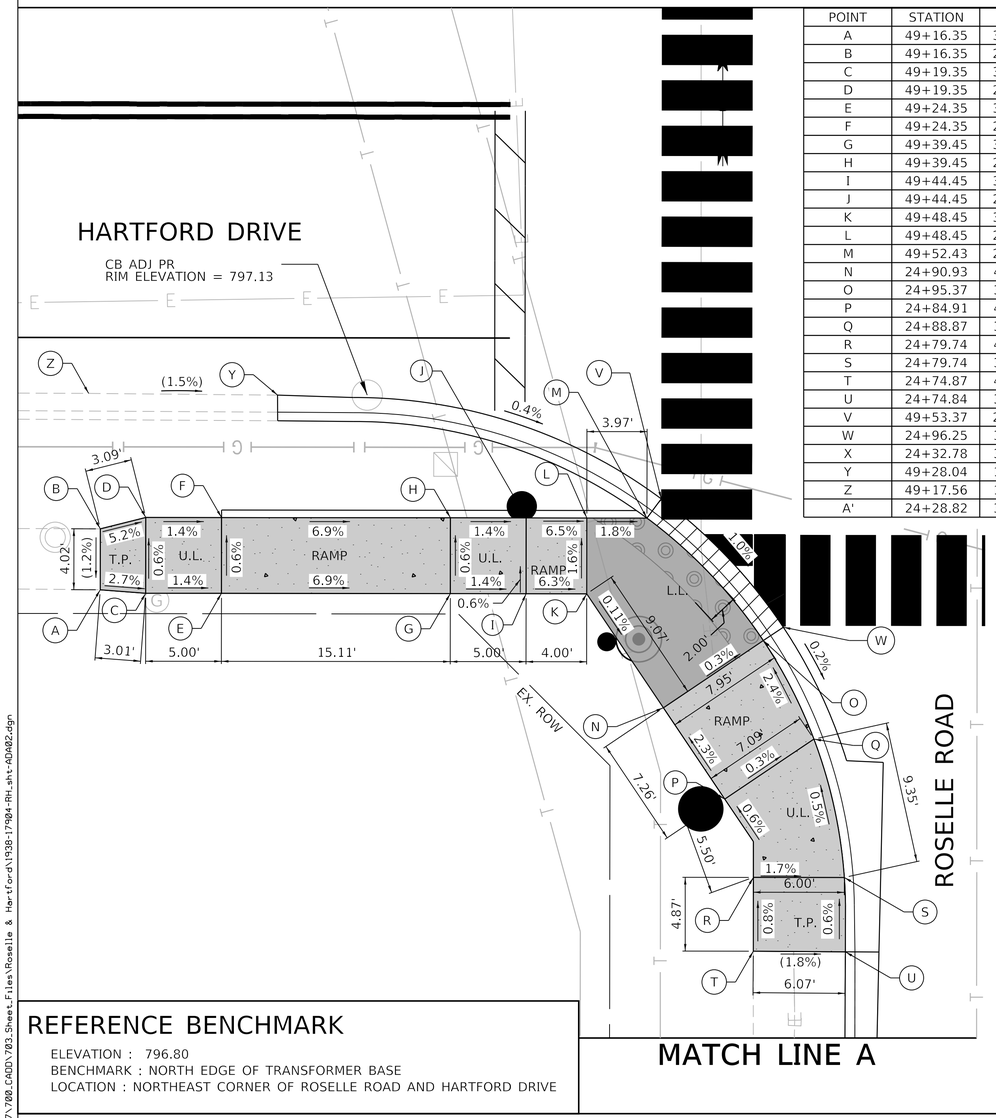

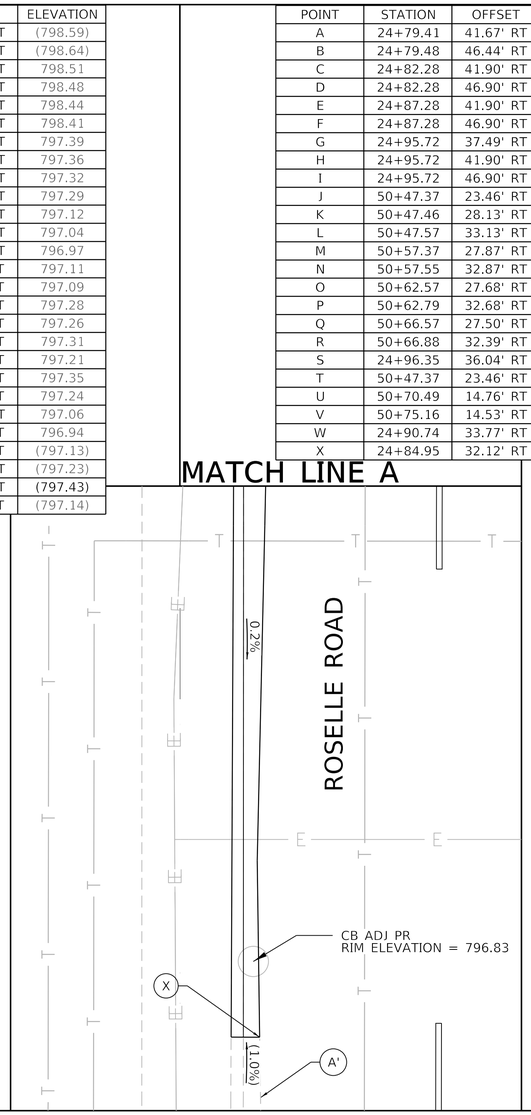

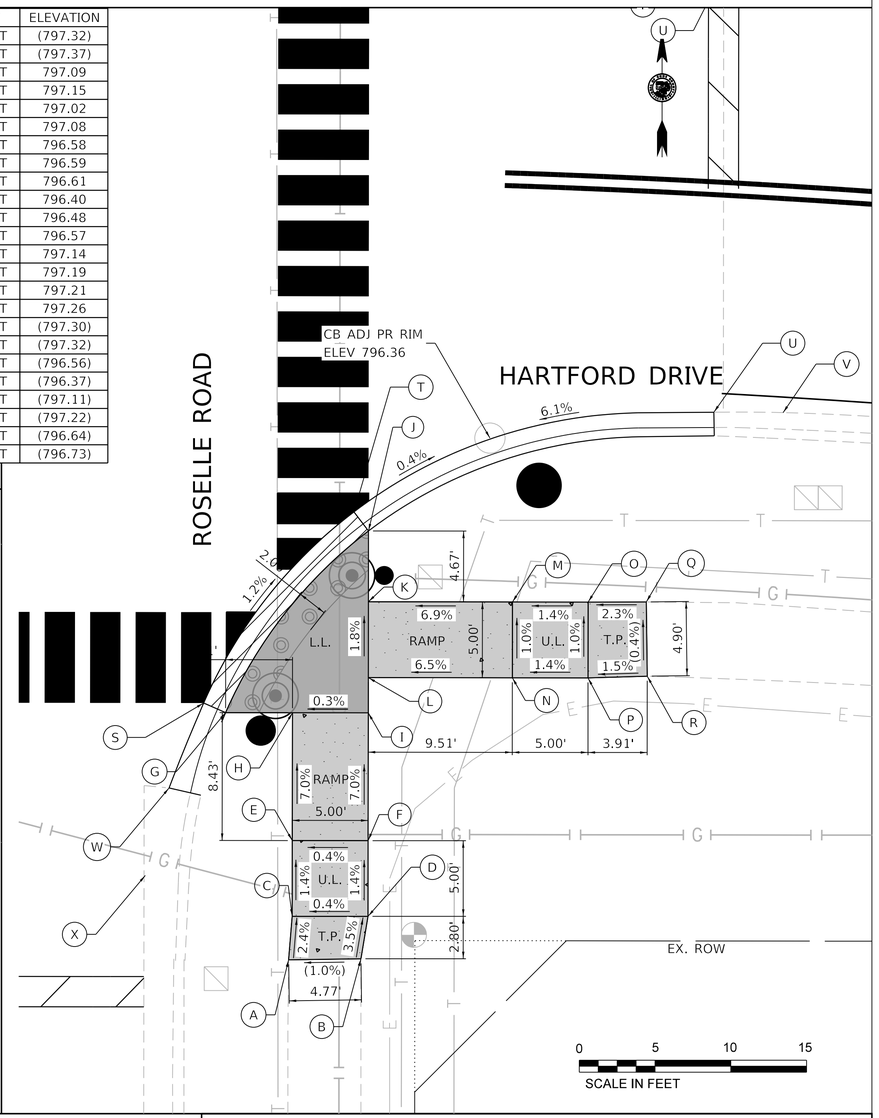

REFERENCE BENCHMARK

ELEVATION : 796.80
BENCHMARK : NORTH EDGE OF TRANSFORMER BASE
LOCATION : NORTHEAST CORNER OF ROSELLE ROAD AND HARTFORD DRIVE

CONSTRUCTION NOTES

1.) WHERE ADA/PROWAG REQUIREMENTS CANNOT BE MET BY MODIFYING STANDARD DESIGN ELEMENT, THE GUTTER FLAG CROSS SLOPE CAN BE MODIFIED FROM -6% (-5% ADJUSTED FOR CURB RAMP) TO -2% TO ACHIEVE A PEDESTRIAN ACCESS ROUTE CROSS SLOPE OF LESS THAN 2%. ANY FLOW SHALL BE DIRECTED AWAY FROM THE CURB RAMP OR TO AN EXISTING STRUCTURE. ELEVATIONS AT EDGE OF PAVEMENT, FLOW LINE, AND BACK OF CURB SHALL BE NOTED.

2.) WHERE THE EDGE OF PAVEMENT ELEVATION HAS CHANGED FROM RAMP MODIFICATIONS OR DUE TO POOR CONDITION, THE ADJACENT PAVEMENT SHALL BE PATCHED WITH THE SAME TYPE AND DEPTH OF PAVEMENT ALREADY EXISTING. THE PATCH SHALL BE A FULL LANE WIDTH WITH SAW CUTS AT LANE LINES AND PERPENDICULAR TO THE DIRECTION OF TRAFFIC.

3.) SIDEWALK JOINTS SHALL BE 5-FOOT ON CENTER UNLESS OTHERWISE SHOWN ON PLANS.

4.) STATION AND OFFSET CALLOUTS ARE BASED ON ROSELLE ROAD AND HARTFORD DRIVE CENTERLINES.

5.) ALL PEDESTRIAN PUSH BUTTON LOCATIONS SHALL FOLLOW THE GUIDELINES FROM ADA/PROWAG.

6.) THE LOCATION OF THE PEDESTRIAN PUSH BUTTON MUST BE PARALLEL TO THE CROSSWALK.

7.) COORDINATION BETWEEN THE ELECTRICAL CONTRACTOR AND SIDEWALK CONTRACTOR IS REQUIRED BEFORE THE SIDEWALK CONSTRUCTION. THE CONTRACTOR SHALL CONTACT CCDOTH AT 312-603-1734.

8.) A PEDESTRIAN PUSH BUTTON EXTENSION MAY BE NEEDED FOR THE ACCESSIBILITY AND CORRECT ALIGNMENT OF PEDESTRIAN PUSH BUTTON. THE EXTENSION SHALL BE INCLUDED IN COST OF THE PAY ITEM "PEDESTRIAN PUSH BUTTON"

9.) IF PEDESTRIAN PUSH BUTTONS ARE CHANGED DUE TO ADA/PROWAG REQUIREMENTS, THE EXISTING HOLES IN THE POST AND/OR MAST ARM POLE SHALL BE PLUGGED. THIS SHALL BE INCLUDED IN COST OF THE PAY ITEM "PEDESTRIAN PUSH BUTTON".

10.) ADDITIONAL SIDEWALK BEHIND THE TRAFFIC SIGNAL POST/POLE MAY BE NEEDED.

LEGEND

- PROPOSED 8" SIDEWALK
- T.P. TRANSITION PANEL
- ( ) EXISTING ELEVATION/SLOPE
- BRICK PAVEMENT REMOVAL AND REPLACEMENT
- DETECTABLE WARNINGS (SPECIAL)
- U.L. UPPER LANDING
- L.L. LOWER LANDING
- DEPRESSED CURB & GUTTER

PLOT DATE = 1/15/2026 PLOT TIME = 9:48:52 PM
FILE NAME = pw:\\sragh-pwbentleyuscomsragh-pw-01\Documents\Projects\23027-07\700_CADD\703_Sheet_Files\Roselle & Hartford\1938-17984-RH-sht-ADA02.dgn

SCHAUMBURG, IL	COUNTY HIGHWAY:	V60	
	FISCAL YEAR:	2024	
	SECTION:	23-HSIP1-00-TL	

COUNTY OF COOK
DEPARTMENT OF TRANSPORTATION AND HIGHWAYS

COMPUTED: CJ
DRAWN: SA
CHECKED: RR

REVISIONS:	DATE:

ROSELLE RD AND HARTFORD DR
ADA DETAIL SHEET
SOUTH

C-29
SCALE: 1"=5' SHEET: 86

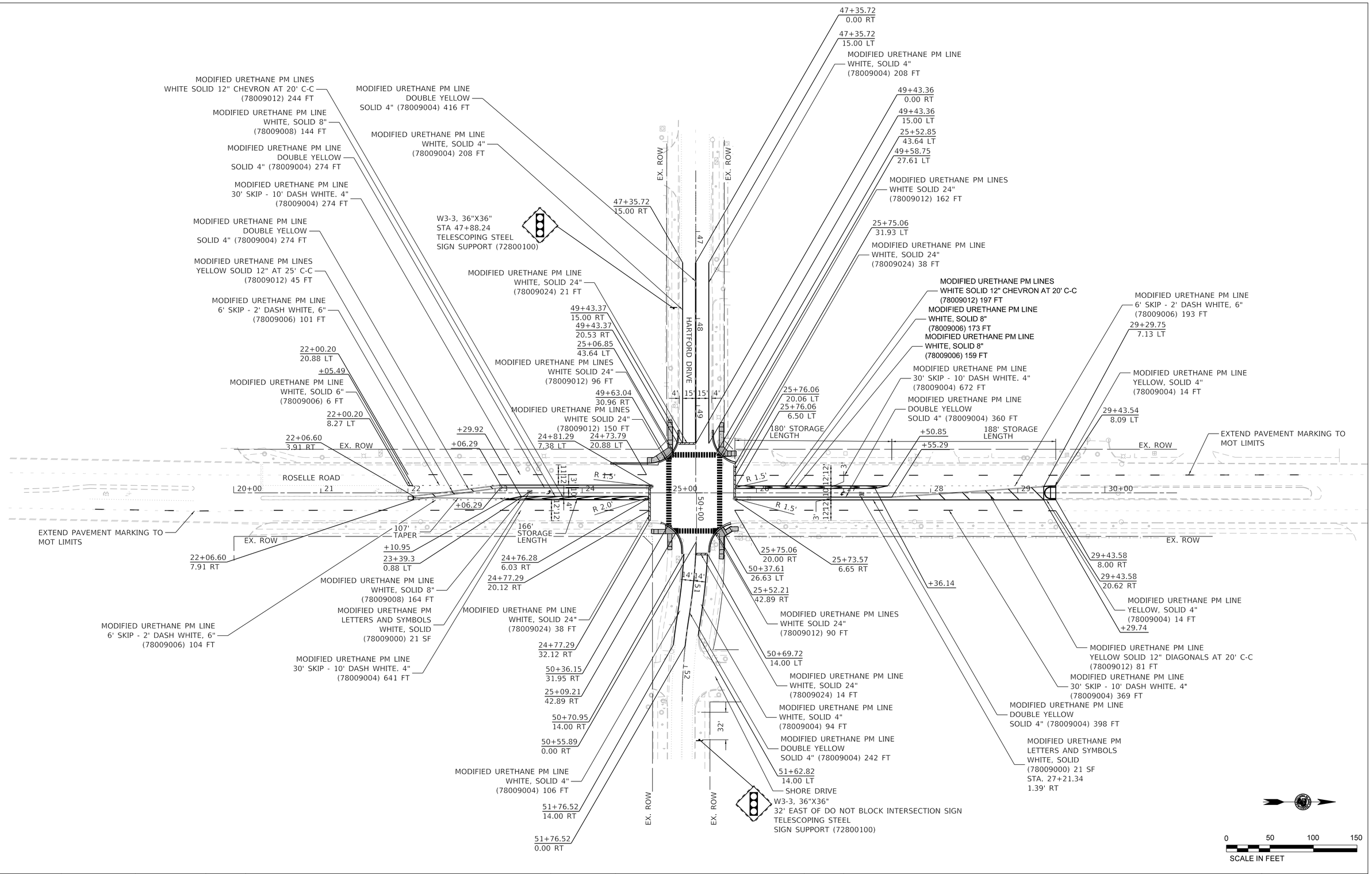

PLOT DATE = 1/15/2026 PLOT TIME = 9:51:37 PM
FILE NAME = p:\\singh-pw.bentley.com\singh-pw-01\Documents\Projects\23027-07\700_CADD\703_Sheet_Files\Roselle & Hartford\1938-17904-RH_sht-PMK01.dgn

SCHAUMBURG, IL	COUNTY HIGHWAY:	V60	**COUNTY OF COOK** DEPARTMENT OF TRANSPORTATION AND HIGHWAYS	COMPUTED: SA DRAWN: SA CHECKED: CJ	REVISIONS:	DATE:	**ROSELLE RD AND HARTFORD DR** **PAVEMENT MARKING AND SIGNAGE**	PM-3
	FISCAL YEAR:	2024						SCALE: 1"=50' SHEET: 94
	SECTION:	23-HSIP1-00-TL						

TEMPORARY TRAFFIC SIGNAL NOTES

1. ALL CONTROL EQUIPMENT INCLUDING EMERGENCY PRE-EMPTION AND COMMUNICATION DEVICES FOR THE TEMPORARY TRAFFIC SIGNAL(S) SHALL BE FURNISHED BY THE CONTRACTOR.

2. ONLY CONTROLLERS SUPPLIED BY ONE OF THE DISTRICT APPROVED CLOSED LOOP EQUIPMENT MANUFACTURERS WILL BE APPROVED FOR USE AT TEMPORARY SIGNAL LOCATIONS. ALL CONTROLLERS USED FOR TEMPORARY TRAFFIC SIGNALS SHALL BE FULLY ACTUATED NEMA MICROPROCESSOR BASED WITH RS232 DATA ENTRY PORTS COMPATIBLE WITH EXISTING MONITORING SOFTWARE APPROVED BY IDOT DISTRICT 1, INSTALLED IN A NEMA TS1 OR TS2 CABINET. ONLY ONE BRAND OF CONTROLLER WILL BE ACCEPTED FOR ANY ONE CONTRACT.

3. ALL TRAFFIC SIGNAL SECTIONS, AND PEDESTRIAN SIGNAL SECTIONS SHALL BE 12" (300MM). HEADS SHALL BE PLACED AS INDICATED ON THE TEMPORARY TRAFFIC SIGNAL PLAN OR AS DIRECTED BY THE ENGINEER. THE CONTRACTOR SHALL FURNISH ENOUGH CABLE SLACK TO RELOCATE HEADS TO ANY POSITION ON THE SPAN WIRE OR AT LOCATIONS ILLUSTRATED ON THE PLANS FOR CONSTRUCTION STAGING. THE TEMPORARY TRAFFIC SIGNAL SHALL REMAIN IN OPERATION DURING ALL SIGNAL HEAD RELOCATIONS. EACH TEMPORARY TRAFFIC SIGNAL HEAD SHALL HAVE ITS OWN CABLE FROM THE CONTROLLER CABINET TO THE SIGNAL HEAD. IF THE EXISTING INTERSECTION HAS A ILLUMINATED STREET NAME SIGNS THE CONTRACTOR SHALL FURNISH STANDARD NON-ILLUMINATED SIGNS FOR THE TEMPORARY TRAFFIC SIGNAL INSTALLATION.

4. ALL EXISTING STREET NAME AND INTERSECTION REGULATORY SIGNS SHALL BE REMOVED FROM EXISTING POLES, RELOCATED AND SECURELY FASTENED TO THE SIGNAL SPAN WIRE OR WOOD POLE AS DIRECTED BY THE ENGINEER. UPON COMPLETION OF PERMANENT TRAFFIC SIGNAL WORK, ALL STREET NAME AND INTERSECTION REGULATORY SIGNS SHALL BE REMOVED FROM THE TEMPORARY TRAFFIC SIGNAL INSTALLATION AND RELOCATED TO PERMANENT TRAFFIC SIGNAL POLES AS DIRECTED BY THE ENGINEER.

5. ANY TEMPORARY SIGNAL WITHIN AN EXISTING CLOSED LOOP TRAFFIC SIGNAL SYSTEM SHALL BE INTERCONNECTED TO THAT SYSTEM USING SIMILAR BRAND CONTROL EQUIPMENT.

6. THE TEMPORARY TRAFFIC SIGNAL SHALL HAVE THE SIGNAL HEAD DISPLAYS, SIGNAL HEAD PLACEMENTS AND CONTROLLER PHASING MATCH THE EXISTING TRAFFIC SIGNAL, AT THE TIME OF THE TURN ON IF NO TRAFFIC STAGING IS IN PLACE OR WILL NOT BE STAGED ON THE DAY OF THE TURN ON.

7. ANY TEMPORARY TRAFFIC SECTIONS NOT IN USE DURING A STAGE OF CONSTRUCTION SHALL BE BAGGED AND DEACTIVATED. ALL PERMANENT TRAFFIC SIGNAL SECTIONS SHALL BE BAGGED OR REMOVED WHILE THE TEMPORARY TRAFFIC SIGNAL IS OPERATION.

8. ALL VIDEO DETECTION ZONES ARE TO BE REDEFINED DURING EACH STAGE OF CONSTRUCTION AND ARE INCLUDED IN THE COST OF THE TEMPORARY TRAFFIC SIGNAL INSTALLATION.

9. DETECTION AT TEMPORARY TRAFFIC SIGNALS SHALL BE INCLUDED FOR ALL APPROACHES OF THE INTERSECTION UNLESS INDICATED OTHERWISE ON THE PLANS. THE DETECTION SYSTEM MUST MEET THE SPECIFICATIONS OF DISTRICT 1 AND THE CONTRACTOR SHALL PLACE THE DETECTORS INTO OPERATION THE SATISFACTION OF THE ENGINEER.

10. THE CONTRACTOR IS RESPONSIBLE FOR RELOCATING ALL SIGNAL HEADS TO AGREE WITH CONSTRUCTION STAGING AS SHOWN IN THE PLANS OR AS DIRECTED BY THE ENGINEER AND IS CONSIDERED TO BE PART OF THE PAY ITEM TEMPORARY TRAFFIC SIGNAL INSTALLATION. IF THERE IS UTILITY CONFLICT, SIGNAL HEAD CAN BE PUT HORIZONTALLY.

11. COMPLETELY REMOVE ALL EXISTING CONCRETE FOUNDATIONS FOR TRAFFIC SIGNAL POSTS, MAST ARM POLES, AND CONTROLLER CABINETS. THE GAS COMPANY SHALL BE CONTACTED BEFORE REMOVING THE EXISTING CONTROLLER FOUNDATION, AS THE GROUND ROD MAY BE IN CONTACT WITH THE GAS MAIN.

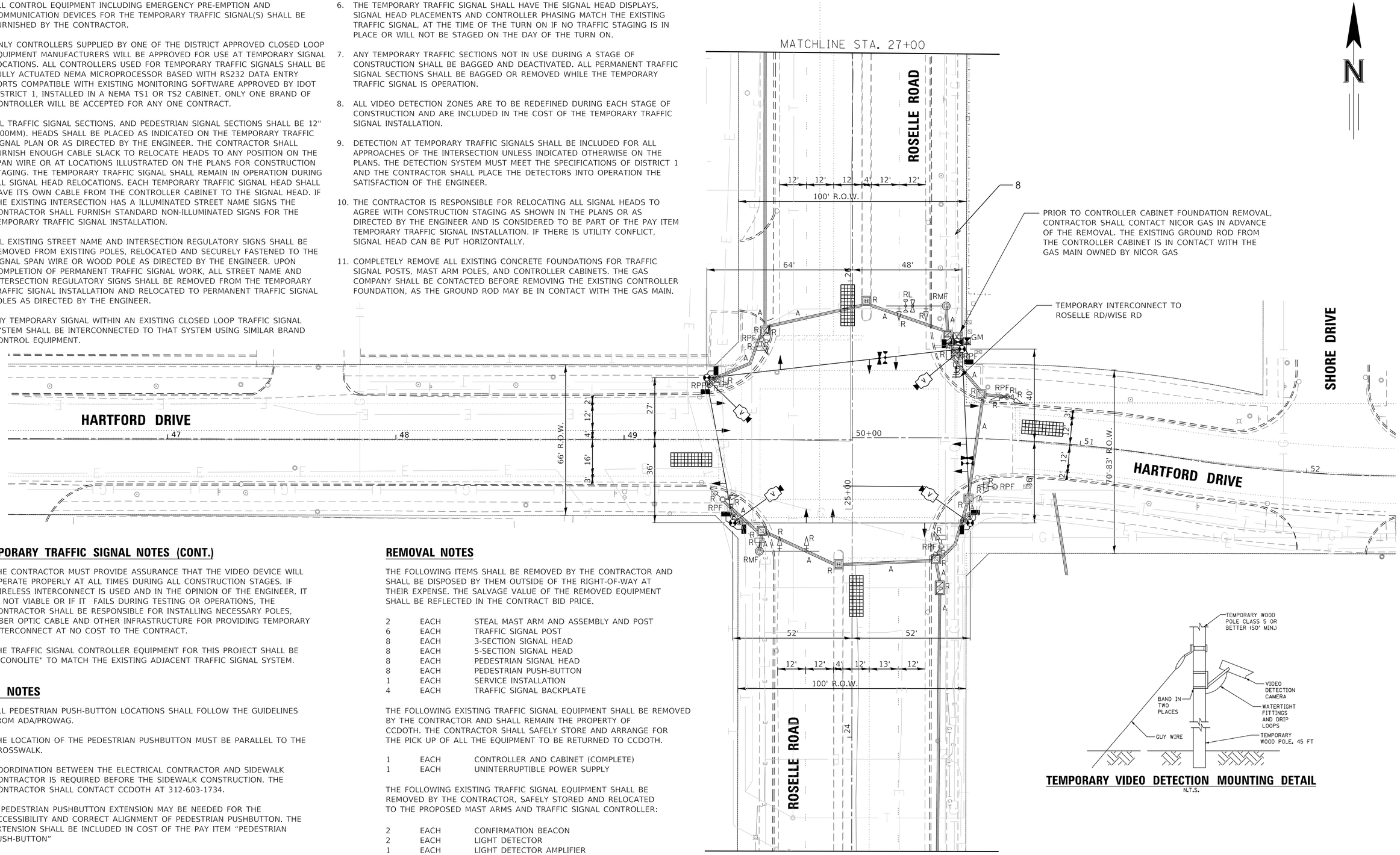

TEMPORARY TRAFFIC SIGNAL NOTES (CONT.)

12. THE CONTRACTOR MUST PROVIDE ASSURANCE THAT THE VIDEO DEVICE WILL OPERATE PROPERLY AT ALL TIMES DURING ALL CONSTRUCTION STAGES. IF WIRELESS INTERCONNECT IS USED AND IN THE OPINION OF THE ENGINEER, IT IS NOT VIABLE OR IF IT FAILS DURING TESTING OR OPERATIONS, THE CONTRACTOR SHALL BE RESPONSIBLE FOR INSTALLING NECESSARY POLES, FIBER OPTIC CABLE AND OTHER INFRASTRUCTURE FOR PROVIDING TEMPORARY INTERCONNECT AT NO COST TO THE CONTRACT.

13. THE TRAFFIC SIGNAL CONTROLLER EQUIPMENT FOR THIS PROJECT SHALL BE "ECONOLITE" TO MATCH THE EXISTING ADJACENT TRAFFIC SIGNAL SYSTEM.

ADA NOTES

1. ALL PEDESTRIAN PUSH-BUTTON LOCATIONS SHALL FOLLOW THE GUIDELINES FROM ADA/PROWAG.

2. THE LOCATION OF THE PEDESTRIAN PUSHBUTTON MUST BE PARALLEL TO THE CROSSWALK.

3. COORDINATION BETWEEN THE ELECTRICAL CONTRACTOR AND SIDEWALK CONTRACTOR IS REQUIRED BEFORE THE SIDEWALK CONSTRUCTION. THE CONTRACTOR SHALL CONTACT CCDOTH AT 312-603-1734.

4. A PEDESTRIAN PUSHBUTTON EXTENSION MAY BE NEEDED FOR THE ACCESSIBILITY AND CORRECT ALIGNMENT OF PEDESTRIAN PUSHBUTTON. THE EXTENSION SHALL BE INCLUDED IN COST OF THE PAY ITEM "PEDESTRIAN PUSH-BUTTON"

5. ADDITIONAL SIDEWALK BEHIND THE TRAFFIC SIGNAL POST/POLE MAY BE NEEDED.

REMOVAL NOTES

THE FOLLOWING ITEMS SHALL BE REMOVED BY THE CONTRACTOR AND SHALL BE DISPOSED BY THEM OUTSIDE OF THE RIGHT-OF-WAY AT THEIR EXPENSE. THE SALVAGE VALUE OF THE REMOVED EQUIPMENT SHALL BE REFLECTED IN THE CONTRACT BID PRICE.

2	EACH	STEAL MAST ARM AND ASSEMBLY AND POST
6	EACH	TRAFFIC SIGNAL POST
8	EACH	3-SECTION SIGNAL HEAD
8	EACH	5-SECTION SIGNAL HEAD
8	EACH	PEDESTRIAN SIGNAL HEAD
8	EACH	PEDESTRIAN PUSH-BUTTON
1	EACH	SERVICE INSTALLATION
4	EACH	TRAFFIC SIGNAL BACKPLATE

THE FOLLOWING EXISTING TRAFFIC SIGNAL EQUIPMENT SHALL BE REMOVED BY THE CONTRACTOR AND SHALL REMAIN THE PROPERTY OF CCDOTH. THE CONTRACTOR SHALL SAFELY STORE AND ARRANGE FOR THE PICK UP OF ALL THE EQUIPMENT TO BE RETURNED TO CCDOTH.

1	EACH	CONTROLLER AND CABINET (COMPLETE)
1	EACH	UNINTERRUPTIBLE POWER SUPPLY

THE FOLLOWING EXISTING TRAFFIC SIGNAL EQUIPMENT SHALL BE REMOVED BY THE CONTRACTOR, SAFELY STORED AND RELOCATED TO THE PROPOSED MAST ARMS AND TRAFFIC SIGNAL CONTROLLER:

2	EACH	CONFIRMATION BEACON
2	EACH	LIGHT DETECTOR
1	EACH	LIGHT DETECTOR AMPLIFIER

TEMPORARY VIDEO DETECTION MOUNTING DETAIL
N.T.S.

PLOT DATE = 1/16/2026 PLOT TIME = 12:01:31 PM
FILE NAME = pw:\\singh-pw.bentley.com:singh-pw-01\Documents\Projects\2027-07\700_CADD\703_Sheet_Files\Roselle & Hartford\1528-14472_Roselle-Hartford_sht_TS 09_Temp 01.dgn

SCHAUMBURG, IL	COUNTY HIGHWAY:	V60	
	FISCAL YEAR:	2024	
	SECTION:	23-HSIP1-00-TL	

COUNTY OF COOK
DEPARTMENT OF TRANSPORTATION AND HIGHWAYS

COMPUTED: SA
DRAWN: SA
CHECKED: GG

REVISIONS:	DATE:

ROSELLE RD AND HARTFORD DR
TEMPORARY TRAFFIC SIGNAL INSTALLATION PLAN
(1 OF 2)

TS-21
SCALE: 1"=20' SHEET: 97

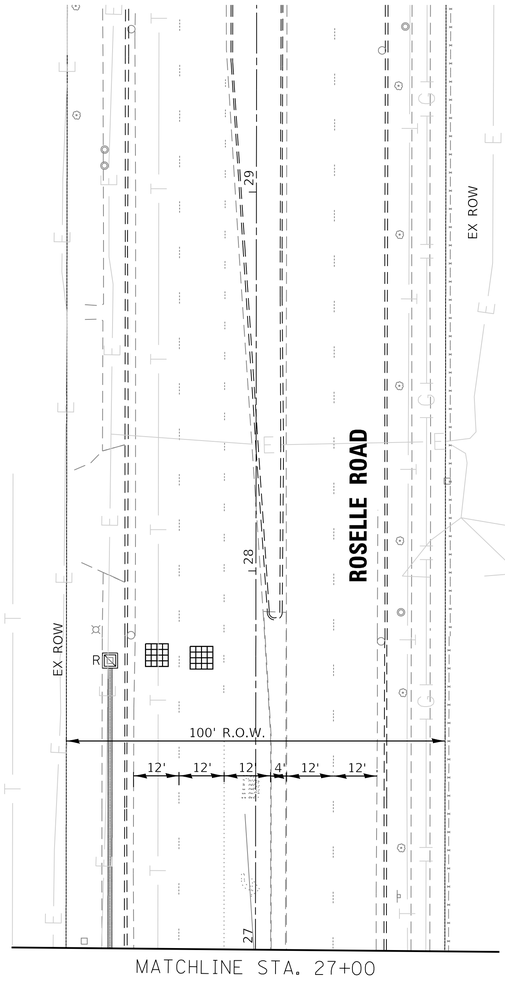

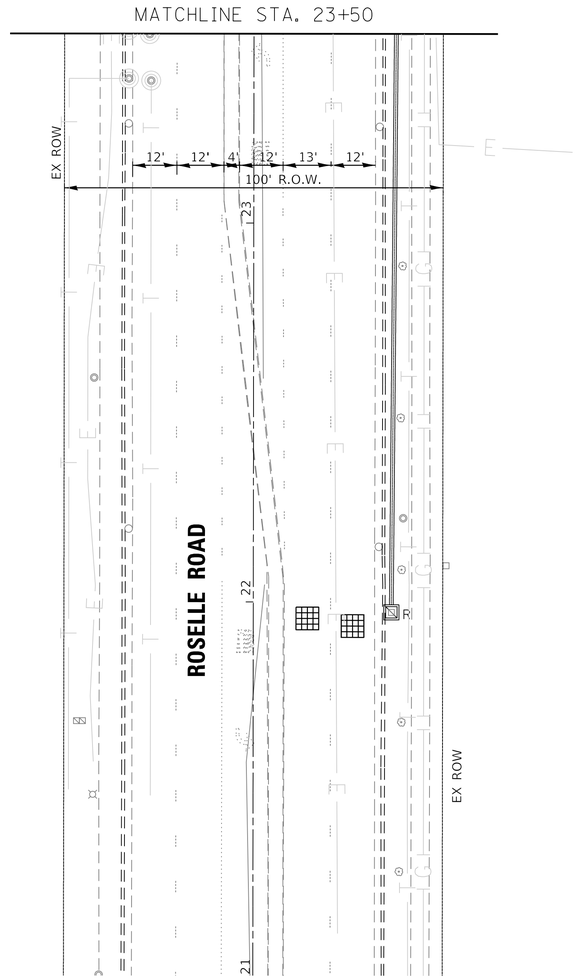



PLOT DATE = 1/16/2026 PLOT TIME = 12:01:39 PM
FILE NAME = pw:\\singh-pw.bentley.com:singh-pw-01\Documents\Projects\23027-07\700_CADD\703_Sheet_Files\Roselle & Hartford\1528-14472_Roselle-Hartford_sht_TS 10_Temp 02.dgn

SCHAUMBURG, IL	COUNTY HIGHWAY:	V60	**COUNTY OF COOK**	COMPUTED: SA	REVISIONS:	DATE:	**ROSELLE RD AND HARTFORD DR**	TS-22
	FISCAL YEAR:	2024	**DEPARTMENT OF TRANSPORTATION AND HIGHWAYS**	DRAWN: SA			**TEMPORARY TRAFFIC SIGNAL INSTALLATION PLAN (2 OF 2)**	
	SECTION:	23-HSIP1-00-TL		CHECKED: GG				SCALE: 1"=20' SHEET: 98

NOTES

1. THE CONTRACTOR SHALL INFORM THE CCDOTH DESIGN ENGINEER AT (312) 603-1734 PRIOR TO THE START OF ANY WORK ON THE CONTRACT. A MINIMUM OF FIVE (5) WORKING DAYS ADVANCED NOTICE IS REQUIRED.
2. THE CONTRACTOR SHALL MARK LOCATIONS OF LOOPS AND CONTACT CCDOTH DESIGN ENGINEER AT (312) 603-1734 FOR LOCATION APPROVAL PRIOR TO THE CUTTING OF THE LOOPS. A MINIMUM OF FIVE (5) WORKING DAYS ADVANCED NOTICE IS REQUIRED.
3. ALL MAST ARM MOUNTED SIGNAL HEADS ARE TO BE ATTACHED 2'-0" FROM THE END OF MAST ARM UNLESS OTHERWISE NOTED.
4. ALL SIGNAL POSTS SHALL BE SET BACK 4 FEET MINIMUM, AND ALL MAST ARM POLES SHALL BE SET BACK 6 FEET MINIMUM FROM THEIR CENTER TO THE BACK OF CURB UNLESS OTHERWISE NOTED. IN NON-CURBED AREAS THE MAST ARM POLE AND THE SIGNAL POST SHALL BE LOCATED A MINIMUM OF 10 FEET BEHIND THE EDGE OF PAVEMENT OR 2 FEET BEHIND THE EDGE OF THE SHOULDER, WHICHEVER DISTANCE IS GREATER.
5. THE EXACT LOCATIONS OF ALL UTILITIES SHALL BE FIELD VERIFIED BY THE CONTRACTOR BEFORE THE INSTALLATION OF ANY COMPONENTS OF THE TRAFFIC SIGNAL SYSTEM. FOR THE LOCATIONS OF THE UTILITIES, CALL JULIE TOLL FREE 1-800-892-0123.
6. ALL ELECTRICAL CABLE SHOULD HAVE POLYVINYL CHLORIDE JACKET.
7. CONDUITS UNDER ROADWAYS AND DRIVEWAYS SHOULD BE INSTALLED IN TRENCH BEFORE PAVEMENT IS PLACED.
8. THE CORNERS OF ALL NEW DETECTOR LOOPS SHALL BE CORE DRILLED INCLUDING PAVEMENT JOINTS AND CRACK.
9. ALL EXISTING LOOP DETECTORS TO BE ANALYZED AND RECUT IF NECESSARY.
10. THE CONTRACTOR SHALL MAKE SURE THAT THE NEW TRAFFIC SIGNAL POST ON AN EXISTING CONCRETE FOUNDATION SHALL BE STRAIGHT UP, IT SHALL BE INCIDENTAL TO THE CONTRACTOR.

NOTES (CONTINUED)

11. EACH DETECTOR LOOP SHALL HAVE ITS OWN 1" COILABLE NON-METALLIC CONDUIT BETWEEN THE EDGE OF PAVEMENT AND THE ADJACENT HANDHOLE AS SHOWN ON THE PLANS AND AS STATED IN THE TRAFFIC SIGNAL SPECIFICATIONS.
12. THE TRAFFIC SIGNAL CONTROLLER EQUIPMENT FOR THIS PROJECT SHALL BE "ECONOLITE" TO MATCH THE EXISTING ADJACENT TRAFFIC SIGNAL SYSTEM.

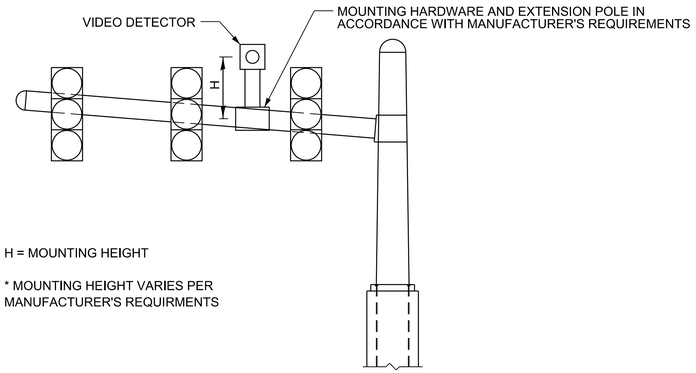

VIDEO DETECTION MOUNTING ON MAST ARM DETAIL

ADA NOTES

1. ALL PEDESTRIAN PUSH-BUTTON LOCATIONS SHALL FOLLOW THE GUIDELINES FROM ADA/PROWAG.
2. THE LOCATION OF THE PEDESTRIAN PUSHBUTTON MUST BE PARALLEL TO THE CROSSWALK.
3. COORDINATION BETWEEN THE ELECTRICAL CONTRACTOR AND SIDEWALK CONTRACTOR IS REQUIRED BEFORE THE SIDEWALK CONSTRUCTION. THE CONTRACTOR SHALL CONTACT CCDOTH AT 312-603-1734.
4. A PEDESTRIAN PUSHBUTTON EXTENSION MAY BE NEEDED FOR THE ACCESSIBILITY AND CORRECT ALIGNMENT OF PEDESTRIAN PUSHBUTTON. THE EXTENSION SHALL BE INCLUDED IN COST OF THE PAY ITEM "PEDESTRIAN PUSH-BUTTON"
5. IF PEDESTRIAN PUSH BUTTONS ARE CHANGED DUE TO ADA/PROWAG REQUIREMENTS, THE EXISTING HOLES IN THE POST AND/OR MAST ARM POLE SHALL BE PLUGGED. THIS SHALL BE INCLUDED IN COST OF THE PAY ITEM "PEDESTRIAN PUSH-BUTTON".

SCHAUMBURG, IL	COUNTY HIGHWAY:	V60	
	FISCAL YEAR:	2024	
	SECTION:	23-HSIP1-00-TL	

COUNTY OF COOK
DEPARTMENT OF TRANSPORTATION AND HIGHWAYS

COMPUTED: SA
DRAWN: SA
CHECKED: GG

REVISIONS:	DATE:

ROSELLE RD AND HARTFORD DR
TRAFFIC SIGNAL REPLACEMENT PLAN
(1 OF 2)

TS-24
SCALE: 1"=20' SHEET: 100

PLOT DATE = 1/16/2026 PLOT TIME = 12:01:50 PM
FILE NAME = pw:\\singh-pw.bentley.com:singh-pw-01\Documents\Projects\23027-07\700_CADD\703_Sheet_Files\Roselle & Hartford\528-14472_Roselle-Hartford_sht_TS 12_Prop 01.dgn

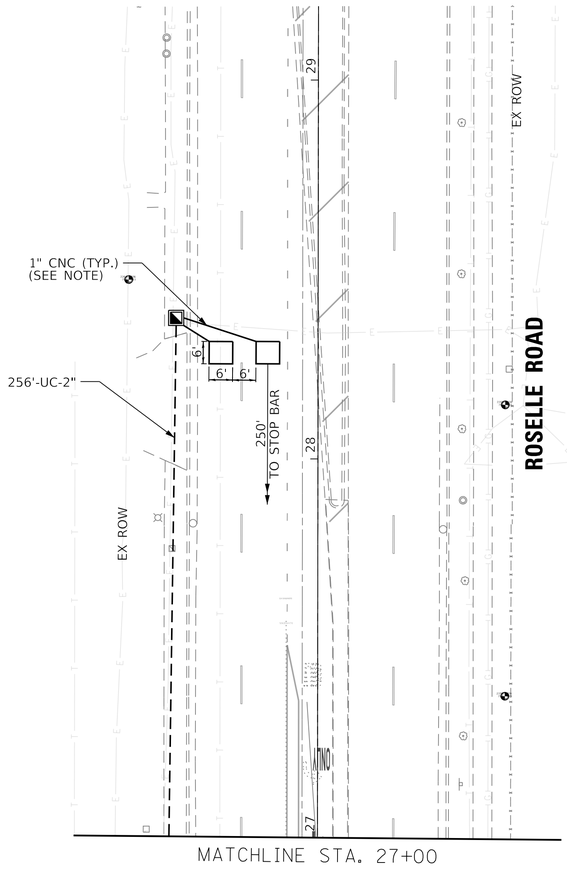

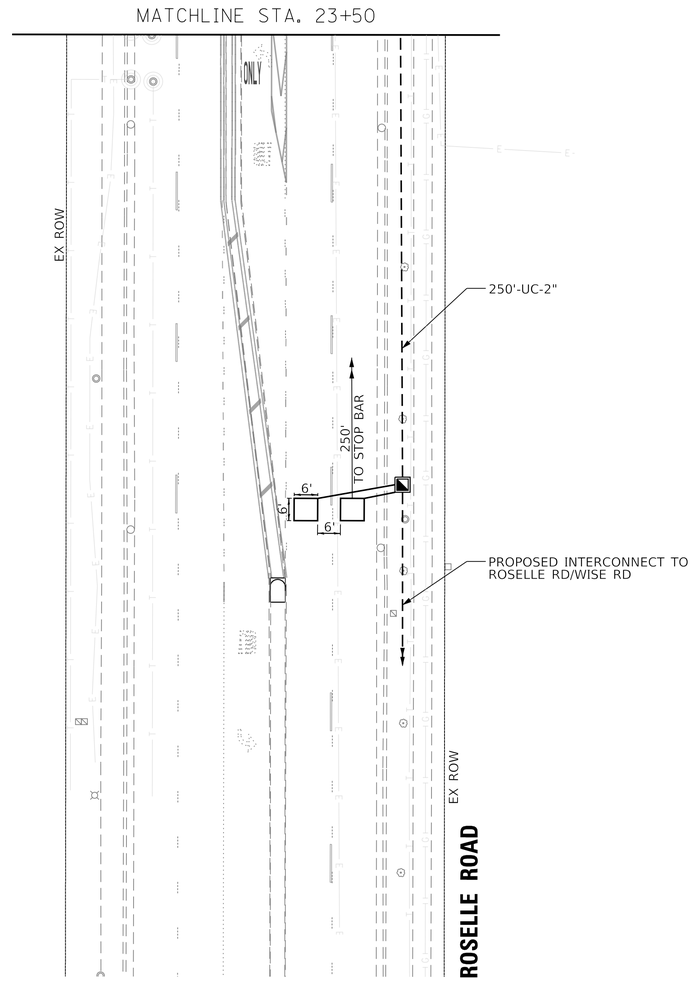

PLOT DATE = 1/16/2026 PLOT TIME = 12:01:56 PM
FILE NAME = pw:\\singh-pw.bentley.com:singh-pw-01\Documents\Projects\23027-07\700_CADD\703_Sheet_Files\Roselle & Hartford\1528-14472_Roselle-Hartford_sht_TS 13_Prop 02.dgn

SCHAUMBURG, IL	COUNTY HIGHWAY: V60	**COUNTY OF COOK**	COMPUTED: SA	REVISIONS:	DATE:	**ROSELLE RD AND HARTFORD DR**	TS-25
	FISCAL YEAR: 2024	**DEPARTMENT OF TRANSPORTATION AND HIGHWAYS**	DRAWN: SA			**TRAFFIC SIGNAL REPLACEMENT PLAN (2 OF 2)**	SCALE: 1"=20' SHEET: 101
	SECTION: 23-HSIP1-00-TL		CHECKED: GG				

VILLAGE OF SCHAUMBURG

AGENDA ITEM SUMMARY

Recommendation to Approve Utilization of Illinois Motor Fuel Tax Funds for Maintenance of Streets and Highways for FY 26/27
04/14/26
Village Board

Presenter: Justin Briski, Superintendent of Field Services
Lead Department: Engineering and Public Works

Executive Summary:

The Illinois Motor Fuel Tax (MFT) Fund is derived from a tax on the privilege of operating motor vehicles upon public highways based on the consumption of motor fuel. The Illinois Department of Transportation (IDOT) allocates these monies according to the provisions outlined in the MFT fund distribution statute, 35 ILCS 505/8, and initiates the process for distribution of motor fuel tax to the counties, townships, and municipalities.

The expenditure of MFT funds requires the approval and supervision of IDOT. The corporate authorities of the municipality must adopt an ordinance or a resolution appropriating the MFT funds. The ordinance or resolution shall state how the funds will be used and shall be submitted to the appropriate IDOT District Office for approval. Staff utilizes MFT funds for maintenance operations, salaries, benefits and equipment usage for MFT eligible tasks including inhouse paving and snow and ice operations. These adjustments offset general fund expenditures to ultimately fund the local road construction program. MFT funds are also used for various road construction projects. The estimate of municipal maintenance expenditures for FY 26/27 is $1,801,129.82.

Attached is the IDOT Resolution of Maintenance of Streets and Highways by Municipality. Under the Illinois Highway Code, the spreadsheet itemizing the recommended maintenance costs for MFT funding, and the Village Resolution.

Recommended Action:

The Village Manager recommends the Engineering and Public Works Committee recommend the Village Board approve the Resolution to Utilize Motor Fuel Tax funds in accordance with the Illinois Department of Transportation Resolution for Maintenance of Streets and Highways by Schaumburg under the Illinois Highway Code (2026-2027).

ATTACHMENTS:
- VOS Resolution
- IDOT Resolution
- Estimate of Maintenance Costs

RESOLUTION NO. R-26-_____

RESOLUTION TO UTILIZE MOTOR FUEL FUNDS IN ACCORDANCE WITH THE ILLINOIS DEPARTMENT OF TRANSPORTATION RESOLUTION FOR MAINTENANCE OF STREETS AND HIGHWAYS BY SCHAUMBURG UNDER THE ILLINOIS HIGHWAY CODE (2026-2027)

WHEREAS, The President and Board of Trustees of the Village of Schaumburg deem it necessary to appropriate the sum of $1,801,129.82 of Motor Fuel Tax Funds for the purpose of maintaining streets and highways under the applicable provisions of the Illinois Highway Code from (May 1, 2026) to (April 30, 2027) described in the attached Exhibit A; and

WHEREAS, it will be in the best interest of the citizens of Schaumburg to do said work;

NOW, THEREFORE, BE IT RESOLVED BY THE PRESIDENT AND BOARD OF TRUSTEES OF THE VILLAGE OF SCHAUMBURG:

SECTION ONE: That the above be incorporated as official findings of the Village of Schaumburg Board of Trustees.

SECTION TWO: That there is hereby appropriated/budgeted the sum of one million, eight hundred one thousand, one hundred twenty-nine and eighty-two hundredths ($1,801,129.82) for the improvement and maintenance of streets and highways and the expenditure of said amount is hereby authorized from the Village's allotment of motor fuel tax funds.

SECTION THREE: That the Village Manager and Village Clerk be and hereby are authorized to sign the IDOT Resolution, Exhibit "A", and any documents in furtherance of this Resolution.

SECTION FOUR: That the Village Clerk is hereby directed to transmit two certified copies of this Resolution to the District Office of the Department of Transportation.

SECTION FIVE: This Resolution shall be in full force and effect after passage and approval by required by law.

AYES:
NAYS:
ABSENT:

PASSED AND APPROVED this _____ day of _____, 2026.

_____
Village President

ATTEST:

_____
Village Clerk

Illinois Department of Transportation

Resolution for Maintenance Under the Illinois Highway Code

District	County	Resolution Number	Resolution Type	Section Number
1	Cook		Original	27-00000-00-GM

BE IT RESOLVED, by the President and Board of Trustees (Governing Body Type) of the Village (Local Public Agency Type) of Schaumburg (Name of Local Public Agency) Illinois that there is hereby appropriated the sum of one million, eight hundred one thousand, one hundred twenty-nine and eighty-two hundredths Dollars ($1,801,129.82) of Motor Fuel Tax funds for the purpose of maintaining streets and highways under the applicable provisions of Illinois Highway Code from 05/01/26 (Beginning Date) to 04/30/27 (Ending Date).

BE IT FURTHER RESOLVED, that only those operations as listed and described on the approved Estimate of Maintenance Costs, including supplemental or revised estimates approved in connection with this resolution, are eligible for maintenance with Motor Fuel Tax funds during the period as specified above.

BE IT FURTHER RESOLVED, that Village (Local Public Agency Type) of Schaumburg (Name of Local Public Agency) shall submit within three months after the end of the maintenance period as stated above, to the Department of Transportation, on forms available from the Department, a certified statement showing expenditures and the balances remaining in the funds authorized for expenditure by the Department under this appropriation, and

BE IT FURTHER RESOLVED, that the Clerk is hereby directed to transmit four (4) certified originals of this resolution to the district office of the Department of Transportation.

I _____ (Name of Clerk) Village (Local Public Agency Type) Clerk in and for said Village (Local Public Agency Type) of Schaumburg (Name of Local Public Agency) in the State of Illinois, and keeper of the records and files thereof, as provided by statute, do hereby certify the foregoing to be a true, perfect and complete copy of a resolution adopted by the President and Board of Trustees (Governing Body Type) of Schaumburg (Name of Local Public Agency) at a meeting held on _____ (Date).

IN TESTIMONY WHEREOF, I have hereunto set my hand and seal this _____ (Day) day of _____ (Month, Year).

(SEAL, if required by the LPA)

Clerk Signature & Date

APPROVED

Regional Engineer Signature & Date
Department of Transportation

Instructions for BLR 14220

This form shall be used when a Local Public Agency (LPA) wants to perform maintenance operations using Motor Fuel Tax (MFT) funds. Refer to Chapter 14 of the Bureau of Local Roads and Streets Manual (BLRS Manual) for more detailed information. This form is to be used by a Municipality or a County. Road Districts will use BLR 14221. For signature requirements refer to Chapter 2, Section 3.05(b) of the BLRS Manual.

When filling out this form electronically, once a field is initially completed, fields requiring the same information will be auto-populated.

Resolution Number	Insert the resolution number as assigned by the LPA, if applicable.
Resolution Type	From the drop down box, choose the type of resolution: -Original would be used when passing a resolution for the first time for this project. -Supplemental would be used when passing a resolution increasing appropriation above previously passed resolutions. -Amended would be used when a previously passed resolution is being amended.
Section Number	Insert the section number of the improvement covered by the resolution.
Governing Body Type	From the drop down box choose the type of administrative body. Choose Board for County; Council or President and Board of Trustees for a City, Village or Town.
LPA Type	From the drop down box choose the LPA body type; County, City, Town or Village.
Name of LPA	Insert the name of the LPA.
Resolution Amount	Insert the dollar value of the resolution for maintenance to be paid for with MFT funds in words, followed by the same amount in numerical format in the ().
Beginning Date	Insert the beginning date of the maintenance period. Maintenance periods must be a 12 or 24 month consecutive period.
Ending Date	Insert the ending date of the maintenance period.
LPA Type	From the drop down box choose the LPA body type; County, City, Town or Village.
Name of LPA	Insert the name of the LPA.
Name of Clerk	Insert the name of the LPA Clerk.
LPA Type	From the drop down box choose the LPA body type; County, City, Town or Village.
LPA Type	From the drop down box choose the LPA body type; County, City, Town or Village.
Name of LPA	Insert the name of the LPA.
Governing Body Type	From the drop down box choose the type of administrative body. Choose Board for County; Council or President and Board of Trustees for a City, Village or Town.
Name of LPA	Insert the name of the LPA.
Date	Insert the date of the meeting.
Day	Insert the day the Clerk signed the document.
Month, Year	Insert the month and year of the clerk's signature.
Clerk Signature	Clerk shall sign here.
Seal	The Clerk shall seal the document here, if required. If a seal is required, electronic signatures should not be used.
Approved	The Department of Transportation representative shall sign and date here upon approval.

A minimum of three (3) certified signed originals must be submitted to the Regional Engineer's District office OR email PDF completed form with electronic signatures to your local District LRS office.

Following IDOT's approval, distribution will be as follows:

Local Public Agency Clerk
Engineer (Municipal, Consultant or County)

Illinois Department of Transportation

Local Public Agency General Maintenance

Estimate of Maintenance Costs

Submittal Type: Original

District	Estimate of Cost For
1	Municipality

Local Public Agency	County	Section Number	Maintenance Period Beginning	Ending
Village of Schaumburg	Cook	27-00000-00-GM	05/01/26	04/30/27

Maintenance Items

Maintenance Operation	Maint Eng Category	Insp. Req.	Material Categories/ Point of Delivery or Work Performed by an Outside Contractor	Unit	Quantity	Unit Cost	Cost	Total Maintenance Operation Cost
Snow Removal - Bulk Salt - Dupage	I	No	Point of Delivery	Tons	6,054	$74.33	$449,993.82	$449,993.82
Energy - Street Lights and Signals	I	No	Point of Delivery	LS		$206,636.00	$0.00	$206,636.00
Snow and Ice Removal - LPA Labor	IIA	No	LPA Labor	HR		$600,000.00	$0.00	$600,000.00
Street Sign Maintenance - LPA Labor	IIA	No	LPA Labor	HR		$66,000.00	$0.00	$66,000.00
Street Maintenance - Pavement Work - LPA Labor	IIA	No	LPA Labor	HR		$140,000.00	$0.00	$140,000.00
Street Sweeping - LPA Labor	IIA	No	LPA Labor	HR		$3,500.00	$0.00	$3,500.00
Lights and Signals - LPA Labor	IIA	No	LPA Labor	HR		$35,000.00	$0.00	$35,000.00
Snow and Ice Removal - LPA Equipment	IIA	No	LPA Equipment	LS		$75,000.00	$0.00	$75,000.00
Street Sign Maintenance - LPA Equipment	IIA	No	LPA Equipment	LS		$45,000.00	$0.00	$45,000.00
Street Maintenance - Pavement Work - LPA Equipment	IIA	No	LPA Equipment	LS		$150,000.00	$0.00	$150,000.00
Street Sweeping - LPA Equipment	IIA	No	LPA Equipment	LS		$5,000.00	$0.00	$5,000.00
Lights and Signals - LPA Equipment	IIA	No	LPA Equipment	LS		$25,000.00	$0.00	$25,000.00
							Total Operation Cost	$1,801,129.82

Estimate of Maintenance Costs

Submittal Type: Original

Local Public Agency	County	Section	Maintenance Period Beginning	Ending
Village of Schaumburg	Cook	27-00000-00-GM	05/01/26	04/30/27

Estimate of Maintenance Costs Summary

Maintenance	MFT Funds	RBI Funds	Other Funds	Estimated Costs
Local Public Agency Labor	$844,500.00			$844,500.00
Local Public Agency Equipment	$300,000.00			$300,000.00
Materials/Contracts(Non Bid Items)	$206,636.00			$206,636.00
Materials/Deliver & Install/Materials Quotations (Bid Items)	$449,993.82			$449,993.82
Formal Contract (Bid Items)	$0.00			$0.00
Maintenance Total	$1,801,129.82			$1,801,129.82

Estimated Maintenance Eng Costs Summary

Maintenance Engineering	MFT Funds	RBI Funds	Other Funds	Total Est Costs
Preliminary Engineering				
Engineering Inspection				
Material Testing				
Advertising				
Bridge Inspection Engineering				
Maintenance Engineering Total				
Total Estimated Maintenance	$1,801,129.82			$1,801,129.82

Remarks

SUBMITTED

Local Public Agency Official Signature & Date

Title

County Engineer/Superintendent of Highways Signature & Date

APPROVED

Regional Engineer Signature & Date
Department of Transportation

IDOT Department Use Only

Received Location | Received Date | Additional Location? ☐

WMFT Entry By | Entry Date

NOTE: Form instructions should not be included when the form is submitted

This form is used by all Local Public Agencies (LPAs) to submit their maintenance program and also submit their maintenance expenditure statements. A resolution (BLR 14220) must be submitted and approved by the Illinois Department of Transportation (IDOT) prior to incurring any expenditures. For items required to be bid the estimate of cost must be submitted prior to submittal of required bidding documents. Authorizations will be made based on the resolution and/or the approved contract/acceptance/material quotations documents.

The maintenance expenditure statement must be submitted within 3 months of the end of the maintenance period. Maintenance resolutions and estimates submitted for future maintenance periods after that date will not be processed until the delinquent maintenance expenditure statement has been submitted. Only one form needs to be completed per maintenance period, combine all operations on one form.

For additional information refer to the Bureau of Local Roads Manual (BLRS), Chapter 14. For signature requirements refer to Chapter 2, section 3.05(b) of the BLRS Manual.

For items being completed for the estimate all materials, equipment, labor and contract amounts are considered estimates. For estimates where LPA equipment is completed, an Equipment Rental Schedule (BLR 12110) must also be submitted for approval. When completing the form for the Maintenance Expenditure all items must be actual amounts spent.

Maintenance — From the drop down choose which type of document is being submitted. Choose Estimate of Cost if an estimate is being submitted, choose Maintenance Expenditure Statement if a maintenance expenditure statement is being submitted

Submittal — Choose the type of submittal, if this is the first submittal choose original, if revising a previous submittal choose, revised. If adding to a previous submittal choose supplemental.

Estimate of Cost For — Select the type of LPA submitting this form from the drop down. Types to choose are County, Municipality, or Road District/Township.

Local Public Agency — Insert the name of the Local Public Agency.

County — Insert the County in which the Local Public Agency is located.

Maintenance Period

Beginning — Insert the beginning date of the maintenance period.

Ending — Insert the ending date of the maintenance period.

Section — Insert the section number assigned to this project. The letters at the end of the section number will always be a "GM".

Maintenance Operations — List each maintenance operation separately

Maintenance Eng. Category — From the drop down choose the maintenance engineering category as it applies to the operation listed to the left. The definitions of the categories can be found in the BLRS Manual Chapter 14, section 14-2.04

Maintenance Engineering Categories are:

Category I — Services purchased without a proposal such as electric energy or materials purchased from Central Management Services' Joint Purchasing Program or another joint purchasing program that has been approved by the District BLRS or CBLRS.

Category II-A — Maintenance items that are not included in Maintenance Engineering Category I or do not require competitive sealed bids according to Section 12-1.02(a) or a local ordinance/resolution.

Category II-B — Routine maintenance items that require competitive sealed bids according to Section12-1.02(a) or a local ordinance/ resolution. Routine maintenance includes all items in the following work categories: snow removal, street sweeping, lighting and traffic signal maintenance, cleaning ditches or drainage structures, tree trimming or removal, mowing, crack sealing, pavement marking, shoulder maintenance limited amounts of concrete curb and gutter repair, scour mitigation, pavement patching, and minor drainage repairs.

Category III — Maintenance items that are not covered by Maintenance Engineering Category I or Category II-B and require competitive bidding with a material proposal, a deliver and install proposal or material quotation.

Category IV — Maintenance items that are not covered by Maintenance Engineering Category I or Category II-B and require competitive bidding with a formal contract proposal.

The instructions listed below only apply to the maintenance estimate of cost. For LPA's using Local Public Agency Labor and/or Local Public Agency Equipment Rental, the estimated amounts are only listed on those specific lines and are not to be included with each operation on the estimate of cost.

Insp Req — From the drop down choose No or Yes as it applies to the maintenance operation listed to the left. Items requiring no engineering inspection should be no.

Material Categories/Point of Delivery or Work Performed by an Outside Contractor — List the items for each operation on a separate line, grouping items for the same operation together, for the operation listed to the left. If work being done as a contract list work by contractor.

Unit — Insert the unit of measure for the material listed to the left, if applicable.

Quantity — Insert the quantity for the material listed to the left, if applicable.

Unit Cost — Insert the unit cost of the material listed to the left, if applicable.

Cost — No entry necessary, this is a calculated field. This is the quantity times the unit cost.

Total Maintenance Operation Cost — Insert the total of the Maintenance Operation Cost, for items done by a contract insert the estimated contract amount.

Maintenance

Estimate of Maintenance Costs Summary — Under each item listed below, list the amount of estimated MFT funds, Rebuild Illinois (RBI) funds and local funds to be expended, if applicable. The total Estimated cost is a calculated field.

Local Public Agency Labor — Insert the estimated amount for LPA labor for all maintenance operations, if applicable.

Local Public Agency Equipment Rental — Insert the estimated amount for LPA equipment rental for all maintenance operations, if applicable.

Materials/Contracts (Non Bid Items) — Insert the estimated amount for materials and/or contracts for items the LPA is not required to bid, if applicable.

Materials/Deliver & Install, Material Quotations — For the operation listed to the left insert the estimate amount to be expended using a bidding process for material/deliver & install proposal and/or material quotations, if applicable.

Formal Contracts — Insert the total amount estimated to be expended on formal contracts. This will be for items required to be bid.

Total Estimated Cost — This is a calculated field and will be automatically filled in for each type. This is the sum of all funding for the item.

Total Maintenance Operation Cost — This is a calculated field, no entry is necessary. This is the sum of all items estimated to be expended on this operation.

Total Maintenance Cost — This is a calculated field, no entry is necessary. This is the sum of all maintenance operation costs.

Maintenance Engineering Cost Summary — For each item listed below, list under the funding type what the estimated amount to be expended for each item.

Preliminary Engineering Fee — Insert the amount of funds estimated to be expended for Preliminary Engineering, if applicable.

Engineering Inspection Fee — Insert the amount of funds estimated to be expended for Engineering Inspection, if applicable.

Material Testing Costs — Insert the dollar amount of funds estimated to be expended on material testing costs, if applicable.

Advertising Costs — Insert the amount of funds estimated to be expended on advertising costs, if applicable.

Bridge Inspection Costs — Insert the amount of funds estimated to be expended on bridge inspection costs, if applicable.

Total Maintenance Engineering — This is a calculated field, no entry is necessary. This is the sum of all maintenance engineering costs listed above.

Totals — This is a calculated field. It is the total of the estimated maintenance cost plus the estimated maintenance engineering cost.

These instructions apply to the Maintenance Expenditure Statement.

Maintenance Operation — Type in the name of the maintenance operation for which the amounts to the right will be completed. For a form that was completed as an Estimate of Cost and is now being changed to a Maintenance Expenditure Statement, this field will be completed from the estimate.

Maint Eng Category — From the drop down select the Maintenance Engineering Category that applies to the operation listed to the left.

LPA Labor — For the operation listed to the left insert the amount expended for LPA labor, if applicable.

LPA Equipment Rental — For the operation listed to the left insert the amount expended on LPA equipment rental if applicable.

Materials/Contracts (Non-Bid) — For the operation listed to the left insert the amount expended for materials and/or contracts that was not required to be bid, if applicable.

Materials/Deliver & Install/Material Quotations (Bid Items) — Insert the total amount expended on Materials Proposals, Deliver and Install proposals, Materials Quotations (Bid Items). This will be for items that were required to be bid.

Formal Contract — For the operation listed to the left insert the amount expended for items bid using the formal contract process, if applicable.

Total Operation Cost — This is a calculated field, it will sum the amounts expended for the operation listed to the left.

Operation Engineering Inspection Fee — For the operation listed to the left insert the amount of engineering inspection charged for this operation, if applicable.

Total Maintenance — This is a calculated field, no entry necessary. It is the sum of all maintenance operations.

Maintenance Engineering Cost Summary Preliminary Engineering Fee — Insert the dollar amount of funds spent on preliminary engineering for this maintenance section.

Engineering Inspection Fee — Insert the amount of funds expended for Engineering Inspection, if applicable.

Material Testing Costs — Insert the dollar amount of funds spent on material testing costs, if applicable.

Advertising Costs — Insert the dollar amount of funds spent on advertising costs, if applicable.

Bridge Inspection Costs — Insert the dollar amount of funds spent on bridge inspection costs, if applicable.

Total Maintenance Engineering — This is a calculated field, no entry is necessary. This is the sum of all maintenance engineering costs listed above.

Total Maintenance Program Costs — Insert the total cost of the Maintenance and Maint. Engineering. The maintenance amount will be the amount from the Total Cost from the Maintenance Items table. The Maint. Eng will be the Maintenance Engineering Total from above.

Contributions, Refunds, Paid with Other Funds — Enter the dollar amount of contributions, refunds or amounts paid with other funds for this maintenance section, if applicable, for both maintenance and maintenance engineering.

Total Motor Fuel Tax/Rebuild Illinois Portion — These are calculated fields, no entry is necessary. This is the sum of the total cost minus the amount paid with local funds.

Motor Fuel Tax Portion — Insert the amount of the total cost that was paid for with Motor Fuel Tax funds for Maintenance and Maint. Engineering, as applicable.

Motor Fuel Tax Funds Authorized — Insert the net amount of Motor Fuel Tax Funds authorized for each type.

Motor Fuel Tax Surplus/Deficit — These are calculated fields, no entry is necessary. This is the sum of the Total Motor Fuel Tax funds expended minus the amount of Motor Fuel Tax funds authorized. A positive number will result in a credit to the unobligated fund of the Motor Fuel Tax fund. A negative number means more funds were spent than authorized. If the negative number has a resolution to cover the overage, the item(s) that resulted in the overage have been approved by IDOT, and are covered in the overrun policy, this amount will be authorized. If these conditions are not met you must contact your District office for guidance.

Rebuild Illinois Portion — Insert the amount of the total cost that was paid for with Rebuild Illinois funds for Maintenance and Maint. Engineering, as applicable.

Rebuild Illinois Funds Authorized — Insert the net amount of Rebuild Illinois Funds authorized for each type.

Rebuild Illinois Surplus/Deficit — These are calculated fields, no entry is necessary. This is the sum of the Total Rebuild Illinois funds expended minus the amount of Rebuild Illinois funds authorized. A positive number will result in a credit to the unobligated fund of the Motor Fuel Tax fund. A negative number means more funds were spent than authorized. If the negative number has a resolution to cover the overage, the item(s) that resulted in the overage have been approved by IDOT, and are covered in the overrun policy, this amount will be authorized. If these conditions are not met you must contact your District office for guidance.

Difference — No entry necessary, this field is automatically calculated. It is the difference between Total Motor Fuel Tax/Rebuild Illinois Portion for Maintenance and Maint. Engineering. The fields must equal zero; if not, review the amounts inserted under Motor Fuel Tax and Rebuild Illinois need to be corrected.

Remarks — Enter remarks as applicable covering the items entered.

Certification — Upon submittal of this form as the maintenance expenditure statement the LPA official shall check this box as certification.

End of instructions for Maintenance Expenditure Statement

Submitted

Local Public Agency Official — The proper official shall sign, insert their title and date here. For Estimates of Cost covering a Township/Road District the road commissioner shall sign and date as Local Public Agency Official. For Municipalities the municipal official shall sign and date here.

County Engineer/Superintendent of Highways — For County project and/or Township/Road District projects the county engineer/superintendent of highways shall sign here.

Approved — Upon approval the Regional Engineer shall sign and date here. This approval is subject to change based upon a documentation review by the Department.

When submitting the form via USPS mail, submit a minimum of three (3) signed original must be submitted to the Regional Engineer's District office. This form may be submitted electronically with electronic signatures.
Following the Regional Engineer's approval, distribution will be as follows:

Local Public Agency Clerk
Engineer (Consultant or County Engineer)
District File

IDOT Department Use Only The Following fields are for IDOT use only.

Received

Location Enter the location received from the drop down.

Date Enter the date the document was received.

WMFT Entry

By Enter the name of the person entering the information into the WMFT system.

Date Enter the date on which the information was entered.

VILLAGE OF SCHAUMBURG

AGENDA ITEM SUMMARY

Recommendation to Approve an Agreement for the Twelfth Year of Metropolitan Water Reclamation District of Greater Chicago Infiltration/Inflow Control Program - Phases I, II, and III with RJN Group, Inc.
04/14/26
Village Board

Presenter: Brent R. McQueen, Engineering Division Manager
Lead Department: Engineering and Public Works

Account(s):	Budget:	Expense Request:
SEE ATTACHED BUDGET TABLE		

The budget status for this request is: Under Budget

Amount Under Budget: $2,428

Executive Summary:

The Metropolitan Water Reclamation District of Greater Chicago (MWRD) is responsible for the reclamation and treatment of wastewater and flood abatement within Cook County. Federal regulations related to the Clean Water Act require water authorities that collect, convey, and/or treat wastewater to develop a plan to minimize rain-derived inflow and infiltration from entering the wastewater collection system. Excess stormwater within a sanitary sewer collection system can lead to Sanitary Sewer Overflows (SSOs) and private property Basement Backups (BBs), both of which are considered unpermitted environmental releases.

In 2015, the MWRD began implementing a new program, the Infiltration/Inflow Control Program (IICP). The IICP, comprised of a short-term and long-term plan, required MWRD satellite municipalities, those within Cook County but outside of the City of Chicago, to investigate their sanitary sewer system, identify the source of I/I, and rehabilitate the defects allowing excess rainwater to enter the sanitary sewer collection system.

In April of 2024, staff released a Request for Proposals (RFP) to qualified professional engineering firms to assist the Village with the required tasks and reporting. In June of 2024, the Village Board approved an agreement with RJN Group, Inc., of Downers Grove, Illinois (RJN), to perform IICP tasks for the Village for a period of three years. The agreement is renewable in the second and third year based upon approval from both parties.

RJN has submitted a proposal to complete reporting, design, and construction administration tasks associated with the IICP program in FY 26/27. The proposed scope of work includes annual compliance reporting, assessment of the Bode and Walnut Basins, design of the Cedarcrest and Walnut & Kessel manhole rehabilitation projects, construction observation of the small Asbestos Cement Pipe lining, and post rehabilitation flow monitoring in the North Braintree Basin.

The Village's operating budget and the FY 26/27 Capital Improvement Program (CIP) include funds in the Utility Fund for the ongoing IICP program. RJN has submitted a proposal in the amount of $406,572 to complete the tasks listed above in FY 26/27. RJN's pricing for design and construction administration equates to less than 10% of the expected construction cost for each project. Based on staff's review of comparable engineering service contracts for similar services, the fee percentage is competitive and provides good value for the Village. As shown in the attached budget table, RJN's proposal is within budget.

Recommended Action:

The Village Manager recommends that the Engineering and Public Works Committee recommend the Village Board authorize the Village Manager and Village Clerk to execute an agreement for the Twelfth Year of Metropolitan Water Reclamation District of Greater Chicago Infiltration/Inflow Control Program for Phases I, II, and III with RJN Group, Inc. of Wheaton, IL, in the amount of $406,572, and approve the required Resolution.

ATTACHMENTS:

- Budget Table
- Proposal
- Resolution
- PSA

FY 26/27 - Improvement and Budget Information					
IMPROVEMENT	**ACCOUNT**	**AVAILABLE BUDGET**	**EXPENSE REQUEST**	**AMOUNT REMAINING**	**PHASE**
Compliance Reporting for the MWRD IICP Program	5724070-7223	$14,000	$14,000	$0	Reporting
Bode Subbasin 04 Area Sewer System Evaluation Survey, Recommendation and Summary Report	5729020-7455 (25024-10-100)	$50,000	$50,000	$0	Study
Walnut Lane Subbasin 05 Area Sewer System Evaluation Survey, Recommendations and Summary Report	5729020-7455 (27020-10-100)	$40,000	$39,353	$647	Study
Rehabilitation Design of Cedarcrest (Bode 5, 6, 8, 9) HP Manhole Rehabilitation	5729020-7455 (26039-10-140)	$45,000	$45,000	$0	Phase II
Rehabilitation Design of Walnut and Kessel Basin HP Manhole Rehabilitation	5729020-7455 (27019-10-140)	$70,000	$68,503	$1,497	Phase II
Construction Management of Small ACP HP Lining	5729020-7455 (23035-20-220)	$145,000	$144,916	$84	Phase III
Flow Monitoring - Investigation Installation in North Braintree Basin	5729020-7455 (19043-10-100)	$45,000	$44,800	$200	Study
	TOTAL:	**$409,000**	**$406,572**	**$2,428**	

March 13, 2026

Mr. Brent McQueen, P.E., CFM, CPESC
Engineering Division Manager, Engineering & Public Works
Village of Schaumburg
714 South Plum Grove Road
Schaumburg, Illinois 60193-4329

Subject: Proposal for Fiscal Year 2026-27 MWRD IICP Services – Annual Reporting, SSES, Design, Construction Management

Dear Mr. McQueen:

RJN Group, Inc. (RJN) is pleased to submit this proposal to provide Professional Engineering and Specialty Field Services to assist the Village of Schaumburg (Village) in meeting the Long-Term Program requirements of the Metropolitan Water Reclamation District of Greater Chicago (MWRD) Infiltration / Inflow Control Program (IICP).

This proposal outlines the eleventh year of work for the MWRD IICP. The following table provides a summary of the work completed in each of the previous years. Although the fiscal year 2014/15 is included in the summary, it primarily served as a planning and preparation year.

2014/15	- Flow Meter Purchase and Kickoff
2015/16	- Flow Meter Planning and Coordination - Walnut Basin Flow Monitoring - Replace Flow Meter Equipment Purchase
2016/17	- MWRD IICP Annual Reporting - Kessel/Braintree Basins Flow Monitoring - Walnut Basin SSES - GIS Collection of Rim Elevations and Locations - Walnut Lane Lift Station Study
2017/18	- MWRD IICP Annual Reporting - Walnut Lift Station Downstream Capacity Flow Monitoring - Kessel Park Basin SSSES - Walnut and Kessel Basin Rehab Design - Walnut Basin Construction Management/Observation
2018/19	- MWRD IICP Annual Reporting, Private Sector Program, and Long-Term Plan - Braintree Basin Flow Monitoring - North Braintree Basin SSES - North Braintree Basin Rehab Design - Walnut and Kessel Basins Construction Management/Observation
2019/20	- MWRD IICP Annual Reporting, Private Sector Program, and Long-Term Plan

2019/20	- Bode Rd LS and Cedarcrest Basins Flow Monitoring - Bode Rd LS Basin SSES and Survey - Bode Rd LS Basin Rehab Design - North Braintree Basin Rehab Construction Management/Observation - Walnut Basin Rehab Construction Management/Observation
2020/21	- MWRD IICP Annual Reporting - Downstream Walnut Basin Flow Monitoring - South Braintree Basin SSES - South Braintree Basin Rehab Design - Bode Rd LS Basin Rehab Construction Management/Observation
2021/22	- MWRD IICP Annual Reporting - South Braintree Basin Rehab Design - South Braintree Basin Point Repair Construction Management/Observation - East Schaumburg Flow Monitoring (Partial) - Braintree Basin Hydraulic Model - Jeffrey Ln and Illinois Ave CMP Assessment and Preliminary Design - Bode Rd Lift Station Force Main Assessment
2022/23	- MWRD IICP Annual Reporting - South Braintree Basin Rehab Design - South Braintree Basin Construction Management/Observation - ACP CCTV Assessment and Preliminary Design (over 10") - ACP (over 10") Point Repair Design - East Schaumburg Flow Monitoring Installs
2023/24	- MWRD IICP Annual Reporting - Downstream Walnut Basins 7 & 9 – MHI, Smoke Testing, and Dye Testing - ACP CCTV Assessment and Preliminary Design (10" and under) - South Braintree High Priority Lining Design - ACP (over 10") High Priority Lining Design - South Braintree Lining Construction Management/Observation - ACP Point Repair Construction Management/Observation - East Schaumburg Flow Monitoring (continued)
2024/25	- MWRD IICP Annual Reporting - Downstream Walnut Basins 7 & 9 – CCTV - ACP (10" and Under) Point Repair Design - ACP (over 10") High Priority Lining Construction Management/Observation - South Braintree High Priority Lining Construction Management/Observation
2025/26	- MWRD IICP Annual Reporting - SSES of Select Cedarcrest Area - ACP(10" and under) HP Lining, N Braintree and Bode LS Areas HP Manhole Rehab Design - ACP (10" and under) Point Repair, N Braintree and Bode LS Areas Manhole Rehab Construction Management/Observation - Flow Monitoring Post High Priority Rehab (Meter Installs)

As a reference, a map exhibit is attached in Exhibit D to show the work completed in previous years and the work proposed for the upcoming fiscal year as discussed with the Village.

The services to be provided under the MWRD IICP for Fiscal Year 2026/27 are as follows:

- MWRD IICP Annual Reporting
- SSES: High Peaking Factor areas in parts of Bode and Walnut Lane
    - Bode-04
    - WL-05
- Design: Select High Priority Defect Manhole Rehabilitation
    - Portions of Cedarcrest, Walnut, and Kessel areas
- Construction Management and Observation:
    - ACP (10" and under) High Priority Lining
- Flow Monitoring:
    - North Braintree Post High Priority Rehabilitation Benchmarking (continued)

MWRD Annual Reporting

As a reminder, MWRD reviewed the Village's Long-Term Operations and Maintenance Plan (LTOMP) and Private Sector Plan (PSP), and it was approved on March 22, 2021.

The annual paperwork for the MWRD IICP will be completed with assistance from Village staff. Now that the short-term program is complete, these services shift to the long-term program, with the seventh submittal due on March 1, 2027.

SSES For Select Bode and Walnut Lane Areas

The Village has completed SSES in all three high priority areas under the short-term program (Walnut, Kessel, and North Braintree). The MWRD's long-term requirements include continuing SSES at 2% of the system per year. This has been progressing with the SSES of the Bode Road Lift Station Areas in 2019/20, South Braintree basins in 2020/21, the Downstream Walnut Basins in 2023-2025, and Bode Basins in 2025/26. To date, the long-term requirements are being met, with the select high peaking factor meters basins next on the list for SSES. The chosen basins are BODE-04 and WL-05, which have 9.63 and 28.8 peaking factors, respectively, based on the full Village flow monitoring efforts and corresponding I/I analysis.

Per the Village GIS, basins BODE-04 and WL-05 include 26,020 linear feet of sanitary sewer and 119 sanitary manholes. The SSES work includes smoke testing, dye flooding, manhole inspection, and CCTV review with recommendations. See Exhibit A for the detailed scope of services as they relate to the SSES activities. As with previous studies, the Village will be providing the sewer televising services, SewerAI (via RJN's partnership agreement) will be utilized to PACP code the CCTV, and RJN will be responsible for QC and analysis of the footage.

Design and Bidding Engineering Services

The engineering services for 2026/27 will be manhole rehabilitation design and bidding services for previously inspected manholes. The basins for manhole rehabilitation design and bidding services include:

- Bode-00, 01, 02, and 03 (inspected in 2019)
- SCHMWL-01, 02, 03, and 04 (inspected in 2016)
- Kessel-01 (inspected in 2021)

The design associated in this proposal includes rehabilitation of High Priority defects identified from manhole inspection activities ranging back to 2016. It is imperative that these efforts are completed in order to maintain good standing with the MWRD IICP and the requirements to fix High Priority defects within 3 years. While the time constraints for rehabilitation have not been met up to this point, due to budget limitations, MWRD has been satisfied with the efforts put forth in fixing the immediate needs of the mainline sewers and laterals. The high priority manhole rehabilitation will be designed and bid in accordance with the construction budget that was approved by the Village. It is expected to include manhole lining, replacement, grading, and other rehabilitation techniques. The design and bidding will be completed near the end of fiscal year 2026/27 in order to complete construction in the 2027/28 fiscal year.

Following this design, the oldest remaining manhole inspections in need of rehabilitation will be from 2020, and the Village will be in a good position for design and construction for those identified high priority defects in subsequent years.

Construction Engineering Services

The construction services will be Construction Management and Observation of the Small ACP (10" and under) High Priority Lining, for which the design was completed in 2025/26. The scope of construction is anticipated to include services for the following work: approximately 16,130 LF of sewer cleaning, televising, and lining (6" - 10" diameter), one (1) point repair, cutting eleven (11) protruding taps, dye testing of eleven (11) existing service connections, reinstatement of two-hundred fourteen (214) laterals, grouting of one-hundred twenty-six (126) laterals, cleaning and televising of ninety (90) laterals, lining of eighty-eight laterals (88), traffic control and protection, restoration and other related and incidental work. The rehabilitation shall be performed by private contractors, chosen through bidding, while being managed and supervised by RJN construction staff.

Flow Monitoring Services

Flow Monitors were installed in 2025/26 in order to capture data from the higher precipitation season in the areas that have had all high priority defects addressed. These basins include Brain-01, 02, 03, 04, 05, and 06 (referred to as North Braintree). Four months of the monitoring period and the analysis will be part of this project. The intention of the monitoring period is to assess the progress of the I/I remediation efforts that the Village has been implementing and benchmark these new I/I levels for these basins.

Program Management & Clarity™

Overall management and planning of the sanitary program to meet MWRD requirements will also be provided. Hours for project management will be allocated in each task described hereinabove.

RJN will provide access to its online data hosting platform **Clarity™**, that includes status of data collection, access to data collected, and all field collected media.

Assuring Quality and Safety

RJN is committed to providing **quality** deliverables. The data collected as a part of this project will be critical in evaluating the Village's sanitary system. RJN's internal quality control (QC) tools within our in-house data management software, as well as our corporate training and QC processes in place will ensure that the project will provide value for the Village.

As an employee-owned firm, RJN's commitment to the **safety** of our employees, Village employees, and the public is paramount. That commitment to safety is demonstrated in our internally developed and audited safety program where our goal is to have all field staff, engineers, and project managers "RJN Safety Certified." Included in the certification is confined-space entry training, temporary traffic control, OSHA 10-hour, fall protection, and many more. Every project follows an RJN Health and Safety Plan (HASP) when completing any field work.

Price and Schedule Summary

This project will be invoiced on a Time and Material and Unit Price basis for a total not-to-exceed fee of **$406,572** (budgetary) as described in the following table and in detail in Exhibit B:

Task Description	FY2026/27 Cost
MWRD Annual Reporting	$14,000
SSES – Bode-04, WL-05	$89,353
Rehabilitation Design and Bidding – Manhole	$113,503
Construction Management – Small ACP HP Lining	$144,916
Flow Monitoring – North Braintree	$44,800
TOTAL	**$406,572**

The project is expected to be completed by April 30, 2027 based on a Notice to Proceed by May 31, 2026. Complete Scope of Services, Pricing, Schedules, and Maps are provided in the following exhibits:

- Exhibit A – Scope of Services
- Exhibit B – Pricing
- Exhibit C – Schedule
- Exhibit D – Project Maps

We are looking forward to the opportunity to continue work with the Village of Schaumburg on this important project. It is our pleasure to submit this proposal to you. Please feel free to contact Tom at 224.587.7366 if you would like to discuss this proposal or have any questions.

Sincerely,



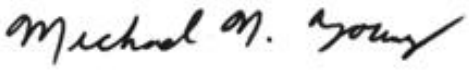

Thomas Romza, PE
Regional Manager

Michael Young, PE
Senior Vice President

EXHIBIT A
SCOPE OF SERVICES

RJN is proposing the following scope of services to conduct the Fiscal Year 2026/27 MWRD IICP Services for the Village of Schaumburg.

A. Project Kickoff

1. Conduct an in-person kickoff meeting with Village staff to discuss the project.
2. Prepare agenda, meeting minutes, and anticipated schedule.
3. Discuss logistics of details within each task of the project.

B. MWRD Annual Reporting

1. Work with the Village to compile the annual submittal to MWRD for Article 8. RJN will complete the following forms;
    a. Long-Term Requirement Annual Summary Report;
    b. High Priority Deficiency Form;
    c. Summary of rehabilitation plan, including a Capital Improvement Program (CIP) as applicable; and
    d. Prioritization/Activity Map Update.
2. Submit completed MWRD forms.
3. Provide overall management of the MWRD program.

C. Cedarcrest Area SSES of basins Bode-04 and WL-05

1. Smoke Testing
    a. Prepare a draft resident smoke testing notification letter for the RJN to send to the affected residents and business owners. The letters will include RJN contact information for use during the smoke testing. If desired, these letters can be formatted as a public service announcement, billing insert, and/or used as a Reverse 911 message sent by the Village. If necessary, provide bilingual letter in Spanish.
    b. Prepare smoke testing door hangers to be hung by RJN staff at each address less than one week prior to smoke testing. The door hangers will also include RJN contact information and can be bilingual if necessary.
    c. Notify the Village and the local fire and police departments of planned smoke testing activities, including daily updates.
    d. Provide equipment, personnel, and smoke as necessary for smoke testing.
    e. During smoke testing, erect smoke testing signs near the testing area and answer resident and Village questions on-site as well as through phone calls.
    f. Use handheld electronic data collection equipment for collecting smoke testing data.
    g. Smoke test the sanitary sewers as outlined, approximately **26,020** linear feet.
    h. GPS locate each identified defect and take a minimum of one digital photograph of each defect.

i. Upload and provide access to smoke testing data and photos on the web viewer Clarity®.

2. Dyed Water Flooding
    a. Provide equipment, personnel, and dye as necessary for dyed water flooding. Water to be provided by Village.
    b. Work with Village-provided televising staff or subcontractor to perform televising during dyed water flooding setups. **Subconsultant services are not included in this proposal, only coordination.**
    c. Set up and complete dyed water flooding as outlined, for up to **2 setups**. Document results with digital photographs of the dye test setup and if possible dyed water entering the sewer (where applicable).
    d. Locate each identified defect relative to segment manholes and take at least one digital photograph or video of each defect (where applicable).
    e. Upload and provide access to dyed water flooding data on the web viewer Clarity®.
3. Manhole Inspection
    a. Provide equipment and personnel as necessary for manhole inspections, up to **119** manholes.
    b. Use handheld electronic data collection equipment for collecting manhole inspection data.
    c. Complete surface manhole inspections for manholes as outlined. Collect the following attribute data, as it can be determined:
        i. Manhole diameter and material;
        ii. Connecting sewer diameters, invert measurements, and flow direction;
        iii. GPS data of the manhole x, y, and z coordinates.
    d. Identify and document manhole condition, including:
        i. Direct evidence of I/I;
        ii. Open pickholes in lid;
        iii. Cover, frame, adjusting ring, and seal condition, including needed adjustments;
        iv. Cone condition and defects;
        v. Wall condition and defects;
        vi. Trough and bench condition and defects; and
    e. Take a minimum of 3 digital photographs at each manhole structure
        i. Surrounding area;
        ii. Manhole cover; and
        iii. Topside - looking down;
    f. Take a 360-degree video at each structure using a remote camera to provide a 360-degree view of the entire structure.
    g. Upload and provide access to manhole inspection data and media on the web viewer Clarity®.
    h. Use data collected through field services to provide updates needed to the Village GIS database. Mapping updates may include:

i. Addition of structures located during field investigations;
ii. Updating of structure location;
iii. Removal of structures confirmed to not exist;
iv. Updating connectivity and flow direction.

i. Provide updates to Village GIS geodatabase in a data transfer with Village staff.
j. Coordinate with Village GIS staff for "check-in/check-out" procedures.
k. Assist the Village with incorporation of changes and information into Village GIS infrastructure and coordinate with other Village consultants on incorporation of GIS data.

4. CCTV Review
   a. Provide autocoding software and coordination for Village CCTV, up to **26,020** linear feet.
   b. Upload and provide access to CCTV data and videos on the web viewer Clarity®.
   c. Provide coordination with the Village's televising crew for areas to be televised and obtaining televising videos.
   d. Provide equipment and personnel as necessary for televising video QC.
   e. Review and QC the CCTV using PACP-certified personnel and PACP coding standards and edit as necessary.
5. Analysis and Report
   a. Provide data analysis as follows:
      i. Compile field data and develop complete list of defects.
      ii. Map results in GIS.
      iii. Assign an estimated flow to each defect; and
      iv. Determine a level of severity and/or preliminary rehabilitation method for each manhole, pipe, or identified defect;
      v. Create a summary of estimate cost.
      vi. Development of a detailed rehabilitation schedule is not included in the scope but can be added if requested by the Village.
   b. Organize data from individual field services into a comprehensive summary report.
   c. Provide the following information for the summary report:
      i. Summary of work completed;
      ii. Map(s) of inspections, defects, and SSES findings.
      iii. Summary of deficiencies observed, and preliminary recommendations developed.
      iv. List(s) and map(s) of preliminary rehabilitation recommended.
      v. Recommendations for follow-up SSES work.
   d. Provide digital copies of data, GIS geodatabases, and photographs.

D. Design and Bidding Engineering Services

1. Bode-00, 01, 02, and 03, SCHMWL-01, 02, 03, and 04, Kessel-01 High Priority Manhole Rehabilitation Design and Bidding:

a. Identify high priority manhole repairs, manholes assessed for rehabilitation from 2016, 2019, and 2021 inspections. Review recommended rehabilitation methods with Village to confirm use of the most effective approach, based on cost, location, I/I reduction, structural improvement, and Village standards.
b. Provide the following field checks:
    i. Identify surface restoration requirements (as applicable);
    ii. Identify potential traffic control needs during construction; and
    iii. QA/QC manhole recommendations
c. Prepare detailed schedules and bid tab for recommended manhole rehabilitation.
d. Prepare manhole rehabilitation exhibits to be included in the Bid Package, including the following:
    i. Manhole rehabilitation location exhibits; and
    ii. Project and Village specific Details & General Notes (if needed).
e. Prepare bid package with plans, schedules, Village front end bid documents, and detailed specifications. Prepare draft bidding documents for Village review.
f. Prepare an opinion of probable construction cost.
g. Bidding Assistance:
    i. Send advertisement to expected bidders;
    ii. Prepare Addenda;
    iii. Respond to Contractors' questions; and
    iv. Prepare letter of recommendation for award.

E. Construction Engineering Services

1. <u>Small ACP (10" and under) Sanitary Sewer High Priority Lining Construction Management and Observation:</u>
    a. Pre-Construction Assistance:
        i. Prepare Contract Documents for execution by Village and Contractor. Review Contractor's insurance documents.
        ii. Coordinate and attend preconstruction meeting. Prepare and distribute meeting minutes.
        iii. Review Contractor's shop drawings and other construction submittals, traffic control plans, pre-construction surface videos and construction phasing.
    b. Ensure contractor provides notification to the residents of impacts to sewer service and access to driveways.
    c. Provide a combination of full and part-time construction observation for the duration of the project. RJN proposes to be on-site full time when the point repairs are completed. Part-time observation will be provided for restoration, manhole rehab, and lining. Part-time supervision will be approximately four hours per day, when the Contractor is onsite and working. This proposal is

based on providing a total of 340 hours of full and part-time construction observation services.

d. Provide daily documentation of the construction activities when on-site, including maintaining a daily project journal, taking digital photographs of all phases of the project, and taking measurements for all quantities installed. RJN will provide access of daily reports to the Village for review via Clarity®, the RJN online platform.
e. Provide periodic inspection of traffic control measures to ensure roadways remain open and driveways/sidewalks are not blocked for extended periods. Identify potential traffic control and surface rehabilitation needs during construction, observe construction phase J.U.L.I.E. locates and identify potential utility conflicts for locations requiring excavation.
f. Alert the Contractor if equipment or materials are being installed prior to material submittal approval or if the wrong materials are being used. Provide field checks of materials and equipment, including enforcement of material testing.
g. Inspect each manhole and surrounding area during and after construction, to ensure no damage has occurred. This includes the final walk through, preparation of punch list, and final inspection.
h. Provide observation services during construction testing where applicable. Review testing documentation submittals for compliance with plans and specifications. Prepare a preliminary and final punchlist. Submit to the Village for review and incorporate Village's comments. Submit to Contractor for completion.
i. Provide personnel as necessary for pre/post rehab televising video review. Review sewer televising videos using PACP-certified personnel. Identify work completed that is in compliance with the Contract Documents and any deficiencies in the final work product.
j. Provide general project management and coordinate meetings with Village and Contractor as agreed upon at preconstruction meeting. Coordinate project with the Village, and Contractor, including updates on progress. Provide contract management, including review of Contractor's payment requests, preparation of change orders, coordination of contract closeout and preparation of a final acceptance letter.
k. Obtain as-built documents from the Contractor and prepare for the Village a set of final construction documents in original AutoCAD or GIS formats. Obtain project specific rehabilitation changes to the Village's collection system and provide to the Village for inclusion in their GIS. Prepare a GIS layer update of the rehabilitation work and rehabilitation locations.
l. Prepare and provide record drawings from the contractor's as-built plans.

F. North Braintree Post High Priority Rehabilitation Flow Monitoring

Six (6) Village owned flow monitors and two (2) RJN rain gauges were installed in fiscal year 2025/26. The data collection and analysis of the flow monitoring is part of this project and is outlined as follows:

1. Provide meter and rain gauge maintenance as necessary to keep equipment in proper operation for the duration of the monitoring period.
2. Perform a total of five calibration measurements during the flow monitoring period.
3. Procure spare parts and replacement equipment, such as batteries, and desiccants, as needed to keep meters and rain gauges working and within operating standards. Meter and sensor replacement is not included for Village-owned meters.
4. Perform final calibration measurements at each site and remove the flow meters and rain gauges. Clean and return Village-owner flow meter equipment.
5. Upload and provide access to flow monitoring data and photos on the web viewer Clarity®
6. Process the collected raw data. Analyze the processed data for wet- and dry-weather flow patterns. Create hydrographs for each meter and determine wet-weather peaking factors at standard storm recurrence and durations for each basin.
7. Perform an inflow and infiltration analysis, including:
    a. Inflow peaking factors
    b. Regression analysis for peaking factor prediction
    c. Scattergraphs and hydrographs
    d. Capacity analysis including downstream control and surcharging assessment
    e. Post rehabilitation I/I mitigation assessment
8. Provide the following information for the summary report:
    a. Details on each meter and rain gauge location
    b. Summary of the flow and rainfall data collected
    c. Conclusions from the flow metering, including evidence of downstream control, hydraulic bottlenecks, levels of infiltration and inflow (I/I), and a comparison to historical I/I analysis.
    d. Adequacy of the existing system to handle existing flows
    e. Recommendations for the next appropriate steps including reduction in I/I
9. Provide digital copies of data, GIS geodatabases, and photographs.

Items Requested from the Village

1. Access to structures for inspection. Assistance locating or opening seized/buried manholes as required. Assist RJN to access backyards when necessary.
2. Assistance with traffic control in high traffic areas, as necessary.
3. Sewer televising for CCTV review and during Dyed Water Flooding inspections and submittal of videos and reports
4. Water for Dyed Water Flooding inspections.
5. Upload into autocoding software “usable” CCTV of sanitary sewers.

6. Tree removals, as necessary, prior to the point repair work.
7. Help coordinating and communicating with all project stakeholders and residents.
8. Provide GIS data as necessary.
9. Review and comment on prepared bidding documents including any project specific modifications for this project.
10. Publish construction bid using the Village's standard procurement procedures.
11. Coordination with RJN in answering bid-related questions in formal addenda.

EXHIBIT B
PRICING

Pricing for the FY 2026/2027 IICP Services project is as follows.

Pricing Terms for Invoicing: Time and Materials, Unit Price

Not-To-Exceed Total Cost: $406,572

Task #	Task Description			Hours	Cost
1000	MWRD IICP Annual Reporting			85	$ 14,000.00
1001	Long-term requirements annual summary report			22	$ 3,310.00
1002	High priority deficiency form			11	$ 1,820.00
1003	CIP Planning			14	$ 2,278.00
1004	Prioritization/activity map updates			13	$ 1,861.00
1005	2025/26 program management services			25	$ 4,731.00
2000	SSES of Meter Basins Bode-04 and WL-05			543	$ 89,353.00
2001	Smoke Testing (26,020 linear feet) and Recommendations			245	$ 31,877.00
2002	Dyed Water Flooding and Recommendations (2 setups)			40	$ 5,335.00
2003	Manhole Inspection (119 manholes), Survey, and Recommendations			141	$ 18,540.00
2004	CCTV Autocode/QC and Recommendations (26,020 linear feet)			46	$ 16,583.00
2005	Final Analysis and Draft/Final Report			71	$ 11,416.00
2006	Direct Costs (Equipment, Mailings, Mileage, Etc…)			-	$ 5,602.00
3000	Rehabilitation Design - Manholes			688	$ 113,503.00
3001	Bode-00, 01, 02, 03			262	$ 42,964.00
3002	SCHWL-01, 02, 03, 04			262	$ 42,964.00
3003	Kessel-01			126	$ 20,703.00
3004	Manhole Rehab Bidding Services			38	$ 6,872.00
4000	Construction Management and Observation			801	$ 144,916.00
4001	ACP (10" and Under) HP Lining			801	$ 141,074.00
4002	Direct Costs (mileage)			-	$ 3,842.00
			TOTAL T&M	**2117**	**$361,772.00**
5000	Flow Monitoring	Units	Quantity	Cost/Unit	$ 44,800.00
5001	Meter/RG Cals, Maint, and Data Review (4-months)	Me-Mo	24	$ 1,050.00	$ 25,200.00
5002	Meter Removal and Return, Finalization	Meter	6	$ 1,350.00	$ 8,100.00
5003	Analysis and Reporting	LS	1	$11,500.00	$ 11,500.00
				TOTAL UNIT PRICE	**$ 44,800.00**
				TOTAL CONTRACT AMOUNT	**$ 406,572.00**

Hourly Rate Schedule

	Classification	2026 Rates*
PD	Project Director	$270.00
SPM	Senior Project Manager	$240.00
PM	Project Manager	$205.00
SCM	Sr. Construction Manager	$185.00
CM	Construction Manager	$170.00
CO	Construction Observer	$150.00
SPE	Senior Project Engineer	$175.00
PE	Project Engineer	$160.00
EI	Engineer I	$145.00
GSS	GIS Specialist	$140.00
GIS	GIS Analyst	$120.00
SDA	Senior Data Analyst	$140.00
DA	Data Analyst	$120.00
FM	Field Manager	$125.00
FS	Field Supervisor	$115.00
FT	Field Technician	$105.00
AS	Administrative Support	$115.00
	**Rates valid through 12/31/2026 and are subject to an annual increase.*	

Notes

- The Hourly Rate Schedule is valid until April 30, 2027. Following that date, rates may be subject to an annual increase.

Contract Option

This contract can be amended to include additional work upon joint approval by the Village and RJN.

EXHIBIT C
PROPOSED SCHEDULE

RJN is prepared to start work immediately upon an Agreement. The schedule for this project is summarized as follows:

Task	Timeline
MWRD Annual Reporting	Submit draft of MWRD submittal by February 17, 2027, with submittal to MWRD by **March 1, 2027** deadline.
SSES of BODE-04 and WL-05	Planning will begin upon NTP, with all SSES activities and reporting expected to be complete by **February 2027**.
Rehabilitation Design and Bidding	Design shall be completed by **March 2027 while** Bidding will start in **April of 2027**.
Construction Management and Observation	Pending plan review by the Village, construction is expected to begin in **June of 2026**.
Flow Monitoring North Braintree	Flow monitors are installed and reporting is expected by **October 2026**

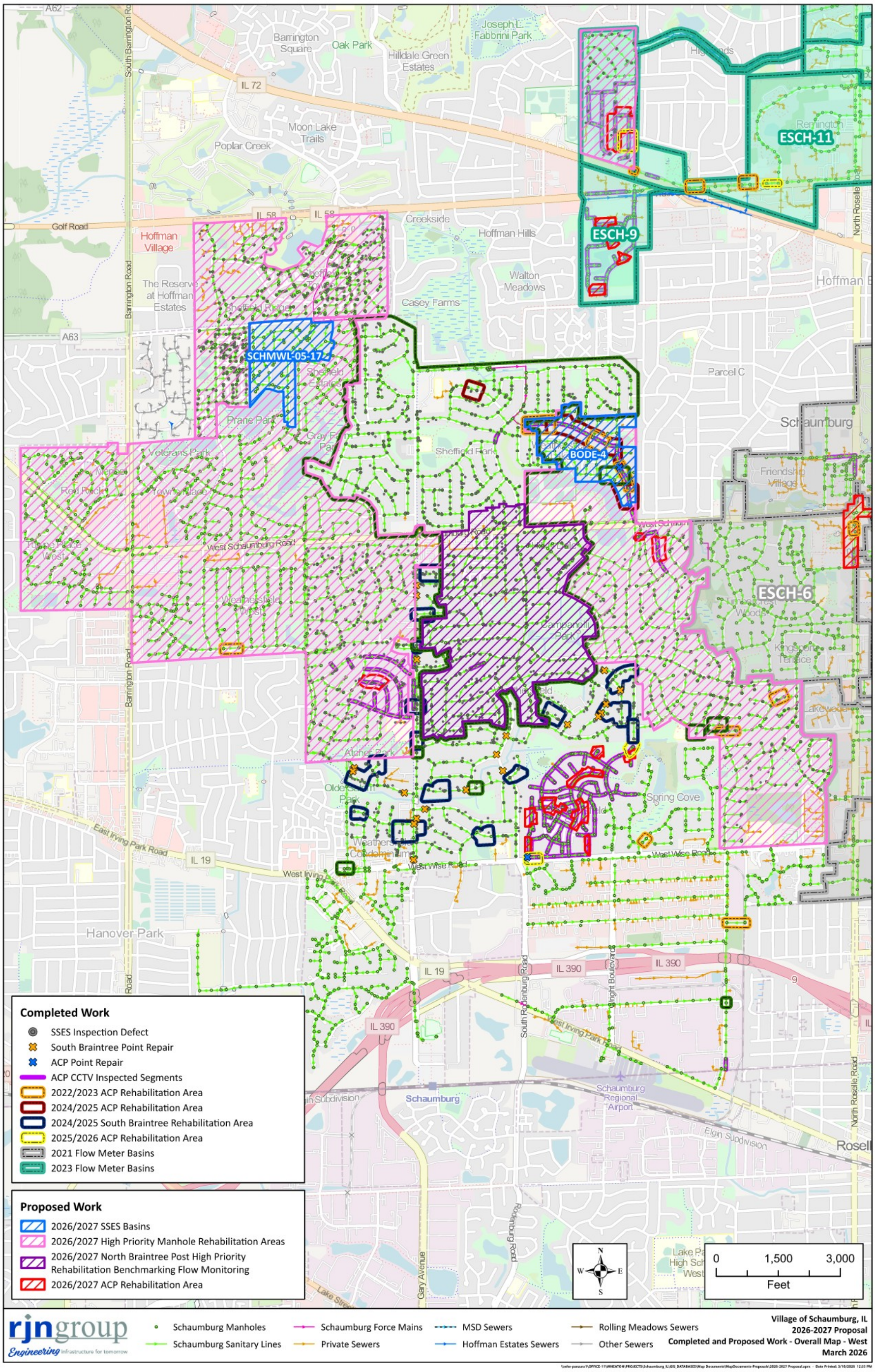
ESCH-11
ESCH-9
ESCH-6
SCHMWL-05-17
BODE-4
Completed Work
SSES Inspection Defect
South Braintree Point Repair
ACP Point Repair
ACP CCTV Inspected Segments
2022/2023 ACP Rehabilitation Area
2024/2025 ACP Rehabilitation Area
2024/2025 South Braintree Rehabilitation Area
2025/2026 ACP Rehabilitation Area
2021 Flow Meter Basins
2023 Flow Meter Basins
Proposed Work
2026/2027 SSES Basins
2026/2027 High Priority Manhole Rehabilitation Areas
2026/2027 North Braintree Post High Priority Rehabilitation Benchmarking Flow Monitoring
2026/2027 ACP Rehabilitation Area
Schaumburg Manholes
Schaumburg Sanitary Lines
Schaumburg Force Mains
Private Sewers
MSD Sewers
Hoffman Estates Sewers
Rolling Meadows Sewers
Other Sewers
0
1,500
3,000
Feet
Village of Schaumburg, IL
2026-2027 Proposal
Completed and Proposed Work - Overall Map - West
March 2026

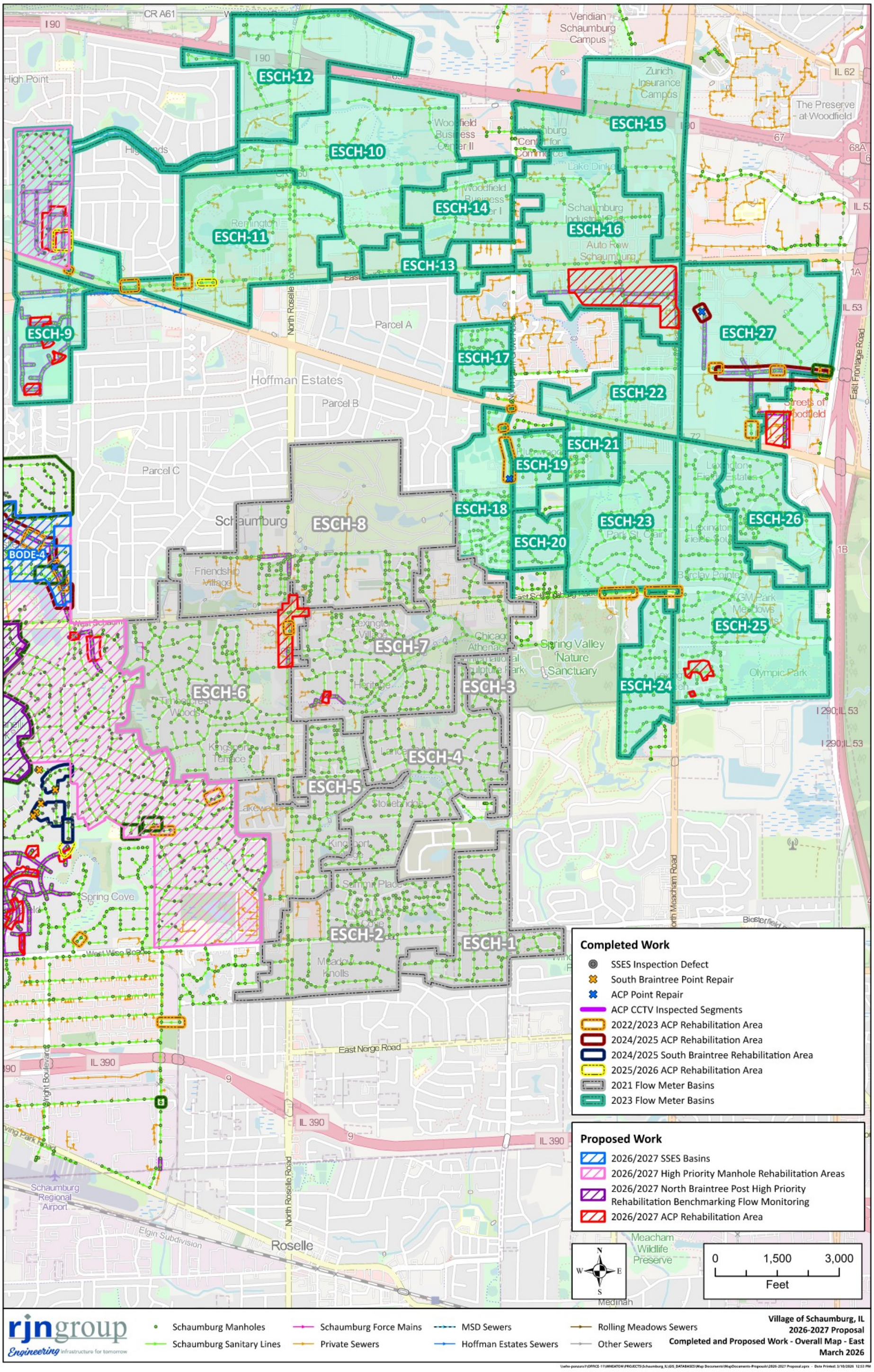
ESCH-12
ESCH-10
ESCH-15
ESCH-14
ESCH-11
ESCH-16
ESCH-13
ESCH-9
ESCH-27
ESCH-17
ESCH-22
ESCH-21
ESCH-19
ESCH-18
ESCH-23
ESCH-26
ESCH-8
BODE-4
ESCH-20
ESCH-25
ESCH-7
ESCH-3
ESCH-6
ESCH-24
ESCH-4
ESCH-5
ESCH-2
ESCH-1
I 90
IL 62
IL 53
IL 390
I 290;IL 53
Veridian Schaumburg Campus
Zurich Insurance Campus
The Preserve at Woodfield
Parcel A
Parcel B
Parcel C
Hoffman Estates
Schaumburg
Roselle
North Roselle Road
East Nerge Road
Spring Valley Nature Sanctuary
Schaumburg Regional Airport
Meacham Wildlife Preserve
Completed Work
SSES Inspection Defect
South Braintree Point Repair
ACP Point Repair
ACP CCTV Inspected Segments
2022/2023 ACP Rehabilitation Area
2024/2025 ACP Rehabilitation Area
2024/2025 South Braintree Rehabilitation Area
2025/2026 ACP Rehabilitation Area
2021 Flow Meter Basins
2023 Flow Meter Basins
Proposed Work
2026/2027 SSES Basins
2026/2027 High Priority Manhole Rehabilitation Areas
2026/2027 North Braintree Post High Priority Rehabilitation Benchmarking Flow Monitoring
2026/2027 ACP Rehabilitation Area
0
1,500
3,000
Feet
rjn group
Engineering infrastructure for tomorrow
Schaumburg Manholes
Schaumburg Sanitary Lines
Schaumburg Force Mains
Private Sewers
MSD Sewers
Hoffman Estates Sewers
Rolling Meadows Sewers
Other Sewers
Village of Schaumburg, IL
2026-2027 Proposal
Completed and Proposed Work - Overall Map - East
March 2026

RESOLUTION NO. R-26-____

A RESOLUTION AUTHORIZING THE VILLAGE MANAGER AND VILLAGE CLERK TO EXECUTE AN AGREEMENT FOR THE TWELFTH YEAR OF METROPOLITAN WATER RECLAMATION DISTRICT OF GREATER CHICAGO INFILTRATION/INFLOW CONTROL PROGRAM – PHASES I, II, AND III WITH RJN GROUP, INC.

WHEREAS, the President and Board of Trustees wish to execute an agreement with RJN Group, Inc. of Wheaton, IL for the Twelfth Year of Metropolitan Water Reclamation District of Greater Chicago Infiltration/Inflow Control Program – Phases I, II, and III; and

WHEREAS, it would be in the best interests of the citizens of Schaumburg to execute the attached Agreement, Exhibit "A".

NOW, THEREFORE, BE IT RESOLVED BY THE PRESIDENT AND BOARD OF TRUSTEES OF THE VILLAGE OF SCHAUMBURG:

SECTION ONE: That the Village Manager and Village Clerk be and hereby are authorized and directed to execute the attached Agreement, Exhibit "A", between the Village of Schaumburg and RJN Group, Inc. of Wheaton, IL**.**

SECTION TWO: That the Village Manager and Village Clerk be and hereby are authorized to sign any documents in furtherance of this Resolution.

SECTION THREE: That this Resolution shall be in full force and effect after passage and approval as required by law.

AYES:

NAYS:

ABSENT:

PASSED AND APPROVED this _____ day of _____, 2026.

_____
Village President

ATTEST:

_____
Village Clerk

VILLAGE OF SCHAUMBURG
PROFESSIONAL SERVICES AGREEMENT FOR
FISCAL YEAR 2026-27 MWRD IICP SERVICES SSES
REHABILITATION DESIGN AND CONSTRUCTION SERVICES

THIS AGREEMENT is dated as of the ___day of _____, 20_ ***("Agreement")*** and is by and between the **VILLAGE OF SCHAUMBURG,** an Illinois municipal corporation ***("Village")*** and the Consultant identified in Subsection 1A below.

IN CONSIDERATION OF the recitals and the mutual covenants and agreements set forth in the Agreement, and pursuant to the Village's statutory powers, the parties agree as follows:

SECTION 1. CONSULTANT.

A. Engagement of Consultant. The Village desires to engage the Consultant identified below to provide all necessary professional consulting services and to perform the work in connection with the project identified below:

Consultant Firm Name: RJN:Group
Street Address: 2655 Warrenville Road, Suite 225
City, State, Zip: Downers Grove, IL 60515
Telephone: 630-682-4700
Email: myoung@lrjnmail.com

B. Project Description.
Provide professional engineering and specialty field services to assist the Village in meeting the long-term program requirements of MWRD Infiltration/Inflow Control Program (IICP). Services related to flow monitoring, pipe assessment, design of sanitary sewer rehabilitation, and construction observation of sanitary sewer rehabilitation.

C. Representations of Consultant. The Consultant has submitted to the Village a description of the services to be provided by the Consultant, a copy of which is attached as Exhibit 1 to this Agreement ***("Services")*** The Consultant represents that it is financially solvent, has the necessary financial resources, and is sufficiently experienced and competent to perform and complete the professional consulting services set forth in Exhibit 1 in a manner consistent with the standards of professional practice by recognized consulting firms providing services of a similar nature.

D. Agreement Amount. The total amount billed by the Consultant for the Services under this Agreement shall not exceed $406,572 as outlined in Exhibit 1, including reimbursable expenses as identified in Exhibit 1, unless amended pursuant to Subsection 8A of this Agreement.

SECTION 2. SCOPE OF SERVICES.

A. Retention of the Consultant. The Village retains the Consultant to perform, and the Consultant agrees to perform, the Services.

B. Services. The Consultant shall provide the Services pursuant to the terms and conditions of this Agreement.

C. Commencement; Time of Performance. The Consultant shall commence the Services immediately upon receipt of written notice from the Village that this Agreement has been fully executed by the Parties or on the date specified in Exhibit 1 (the ***"Commencement Date"***). The Consultant shall diligently and continuously prosecute the Services until the completion of the Services, but in no event later than 365 days after the date of the execution of this Agreement (**"Time *of Performance"*).**

D. Reporting. The Consultant shall regularly report to the Village, regarding the progress of the Services during the term of this Agreement.

SECTION 3. COMPENSATION AND METHOD OF PAYMENT.

A. Agreement Amount. The total amount billed for the Proposal during the term of this Agreement shall not exceed the amount identified as the Agreement Amount in Subsection 1D of this Agreement, without the prior express written authorization of the Village.

B. Invoices and Payment. The Consultant shall be paid as provided in Exhibit 1. The Consultant shall submit invoices to the Village in an approved format for those portions of the Services performed and completed by the Consultant. The amount billed in any such invoice shall be based on the method of payment set forth in Exhibit 1. The Village shall pay to the Consultant the amount billed within 30 days after its receipt and approval of such an invoice.

C. Records. The Consultant shall maintain records showing actual time devoted and costs incurred, and shall permit the authorized representative of the Village to inspect and audit all data and records of the Consultant for work done under the Agreement. The records shall be made available to the Village at reasonable times during the Agreement period, and for three years after the termination of the Agreement.

D. Claim In Addition To Agreement Amount. If the Consultant wishes to make a claim for additional compensation as a result of action taken by the Village, the Consultant shall provide written notice to the Village of such claim within 7 days after occurrence of such action as provided by Subsection 8D of this Agreement, and no claim for additional compensation shall be valid unless made in accordance with this Subsection. Any changes in the Agreement Amount shall be valid only upon written amendment pursuant to Subsection 8A of this Agreement. Regardless of the decision of the Village relative to a claim submitted by the Consultant, the Consultant shall proceed with all of the Services required to complete the Services under this Agreement as determined by the Village without interruption.

E. Taxes, Benefits and Royalties. The Agreement Amount includes all applicable federal, state, and local taxes of every kind and nature applicable to the Services as well as all taxes, contributions, and premiums for unemployment insurance, old age or retirement benefits, pensions, annuities, or similar benefits and all costs, royalties and fees arising from the use on, or the incorporation into, the Services, of patented or copyrighted equipment, materials, supplies, tools, appliances, devices, processes, or inventions. All claim or right to claim additional compensation by reason of the payment of any such tax, contribution, premium, costs, royalties, or fees is hereby waived and released by Consultant.

F. Final Acceptance. The Services, or, if the Services are to be performed in separate phases, each phase of the Services, shall be considered complete on the date of final written acceptance by the Village of the Services or each phase of the Services, as the case may be, which acceptance shall not be unreasonably withheld or delayed.

SECTION 4. PERSONNEL; SUBCONTRACTORS.

A. **Key Project Personnel.** The Key Project Personnel identified in Exhibit 1 shall be primarily responsible for carrying out the Services on behalf of the Consultant. The Key Project Personnel shall not be changed without the Village's prior written approval.

B. **Availability of Personnel.** The Consultant shall provide all personnel necessary to complete the Services including, without limitation, any Key Project Personnel identified in this Agreement. The Consultant shall notify the Village as soon as practicable prior to terminating the employment of, reassigning, or receiving notice of the resignation of, any Key Project Personnel. The Consultant shall have no claim for damages and shall not bill the Village for additional time and materials charges as the result of any portion of the Services which must be duplicated or redone due to such termination or for any delay or extension of the Time of Performance as a result of any such termination, reassigning, or resignation.

C. **Approval and Use of Subcontractors.** The Consultant shall perform the Services with its own personnel and under the management, supervision, and control of its own organization unless otherwise approved by the Village in writing. All subcontractors and subcontracts used by the Consultant shall be acceptable to, and approved in advance by, the Village. The Village's approval of any subcontractor or subcontract shall not relieve the Consultant of full responsibility and liability for the provision, performance, and completion of the Services as required by the Agreement. All Services performed under any subcontract shall be subject to all of the provisions of this Agreement in the same manner as if performed by employees of the Consultant. For purposes of this Agreement, the term "Consultant" shall be deemed also lo refer to all subcontractors of the Consultant, and every subcontract shall include a provision binding the subcontractor to all provisions of this Agreement.

D. **Removal of Personnel and Subcontractors.** If any personnel or subcontractor fails to perform the Services in a manner satisfactory to the Village, the Consultant shall immediately upon notice from the Village remove and replace such personnel or subcontractor. The Consultant shall have no claim for damages, for compensation in excess of the amount contained in this Agreement or for a delay or extension of the Time of Performance as a result of any such removal or replacement.

SECTION 5. CONFIDENTIAL INFORMATION.

A. **Confidential Information.** The term ***"Confidential Information"*** shall mean information designated as "Confidential" in the possession or under the control of the Village relating lo the technical, business or corporate affairs of the Village; Village property; user information, including, without limitation, any information pertaining to usage of the Village's computer system, including and without limitation, any information obtained from server logs or other records of electronic or machine readable form; and the existence of, and terms and conditions of, this Agreement. Village Confidential Information shall not include information that can be demonstrated: (i) to have been rightfully in the possession of the Consultant from a source other than the Village prior to the lime of disclosure of said information lo the Consultant under this Agreement ***("Time of Disclosure");*** (ii) to have been in the public domain prior to the Time of Disclosure; (iii) to have become part of the public domain after the Time of Disclosure by a publication or by any other means except an unauthorized act or omission or breach of this Agreement on the part of the Consultant or the Village; or (iv) to have been supplied to the Consultant after the Time of Disclosure without restriction by a third party who is under no obligation to the Village to maintain such information in confidence.

B. No Disclosure of Confidential Information by the Consultant. The Consultant acknowledges that it shall, in performing the Services for the Village under this Agreement, have access to or be directly or indirectly exposed to Confidential Information. The Consultant shall hold confidential all Confidential Information and shall not disclose or use such Confidential Information without express prior written consent of the Village unless required to perform the Services set forth in this Agreement. The Consultant shall be permitted to disclose Confidential Information as necessary to its subcontractors to fulfill the obligations required by this Agreement. The Consultant shall use reasonable measures at least as strict as those the Consultant uses to protect its own confidential information. Such measures shall include, without limitation, requiring subcontractors of the Consultant to execute a non-disclosure agreement before obtaining access to Confidential Information.

SECTION 6. STANDARD OF CARE: INDEMNIFICATION: INSURANCE.

A. Standard of Care. The Consultant warrants that the Services shall be performed in accordance with the standards of professional practice, care, and dillgence practiced by recognized consulting firms in performing services of a similar nature in the same locale in existence at the time of performance of this Agreement. The standard of care expressed shall be in addition to any other representations expressed in the Agreement, or expressed or implied by law, which are hereby reserved unto the Village.

B. Indemnification. The Consultant shall, without regard to the availability or unavailability of any insurance either of the Village or the Consultant, indemnify and save harmless, the Village, its officials, and its employees, against any and all damages, liabilities, losses, and expenses, including reasonable attorneys' fees and administrative expenses recoverable under applicable law, to the extent arising, out of or caused by, the Consultant's negligent or wrongful acts or omissions in the performance of, or failure to perform, the Services or any part thereof, except to the extent caused by the negligence of the Village.

C. Insurance. Contemporaneous with the Consultant's execution of this Agreement, the Consultant shall provide certificates of insurance and upon request, policies of insurance, all with coverages and limits acceptable to the Village, and evidencing at least the minimum insurance coverages and limits as set forth in Exhibit 2 to this Agreement. But in no event shall any work begin without an insurance certificate or policy having been provided and approved by the Village. Such certificates shall be from companies with a general rating of A and a financial size category of Class X or better, in Best's Insurance Guide. Such certificates of insurance shall provide that no insurer change, modification in, or cancellation of any insurance shall become effective until the expiration of 30 days after written notice thereof shall have been given to the Village. The Consultant shall, at all times during the term of this Agreement, maintain and keep in force, at the Consultant's expense, the insurance coverages provided above, including without limitation at all times to meet the Standard of Care requirements of Subsection 6(A) of this section.

D. No Personal Liability. No elected or appointed official or employee of the Village shall be personally liable, in law or in contract, to the Consultant as the result of the execution of this Agreement. Likewise, no claims or suits shall be made against the employees of the Consultant as a result of the execution of this Agreement.

SECTION 7. CONSULTANT AGREEMENT GENERAL PROVISIONS.

A. Relationship of the Parties. The Consultant shall act as an independent contractor in providing and performing the Services. Nothing, in or done pursuant to this Agreement, shall be construed (i) to create the relationship of principal and agent, employer and employee, partners, or joint venturers between the Village and Consultant; or (ii) to create any relationship between the Village and any subcontractor of the Consultant.

B. Conflict of Interest. The Consultant represents and certifies that, to the best of its knowledge, (1) no Village employee or agent is interested in the business of the Consultant or this Agreement; (2) as of the date of this Agreement neither the Consultant nor any person employed or associated with the Consultant has any interest that would conflict in any manner or degree with the performance of the obligations under this Agreement; and (3) neither the Consultant nor any person employed by or associated with the Consultant shall at any time during the term of this Agreement obtain or acquire any interest that would conflict in any manner or degree with the performance of the obligations under this Agreement.

C. No Collusion. The Consultant represents and certifies that the Consultant is not barred from contracting with a unit of state or local government as a result of (i) a delinquency in the payment of any tax administered by the Illinois Department of Revenue unless the Consultant is contesting, in accordance with the procedures established by the appropriate revenue act, its liability for the tax or the amount of the tax, as set forth in Section 11-42.1-1 *et seq.* of the Illinois Municipal Code, 65 ILCS 5/11-42.1-1 *et seq.;* or (ii) a violation of either Section 33E-3 or Section 33E-4 of Article 33E of the Criminal Code, 720 ILCS 5/33E-1 *et* seq. The Consultant represents that the only persons, firms, or corporations interested in this Agreement as principals are those disclosed to the Village prior to the execution of this Agreement, and that this Agreement is made without collusion with any other person, firm, or corporation. If at any time it shall be found that the Consultant has, in procuring this Agreement, colluded with any other person, firm, or corporation, then the Consultant shall be liable to the Village for all loss or damage that the Village may suffer, and this Agreement shall, at the Village's option, be null and void.

D. Sexual Harassment Policy. The Consultant certifies that it has a written sexual harassment policy in full compliance with Section 2-105(A) (4) of the Illinois Human Rights Act, 775 ILCS 5/2-105(A) (4).

E. Patriot Act Compliance. The Consultant represents and warrants to the *Village* that neither it nor any of its principals, shareholders, members, partners, or affiliates, as applicable, is a person or entity named as a Specially Designated National and Blocked Person (as defined in Presidential Executive Order 13224) and that it is not acting, directly or indirectly, for or on behalf of a Specially Designated National and Blocked Person. The Consultant further represents and warrants to the Village that the Consultant and its principals, shareholders, members, partners, or affiliates, as applicable, are not, directly or indirectly, engaged in, and are not facilitating, the transactions contemplated by this Agreement on behalf of any person or entity named as a Specially Designated National and Blocked Person. The Consultant hereby agrees to defend, indemnify and hold harmless the Village, its corporate authorities, and all Village elected or appointed officials, officers, employees, agents, representatives, engineers, and attorneys, from and against any and all claims, damages, losses, risks, liabilities, and expenses (including reasonable attorneys' fees and costs) arising from or related to any breach of the representations and warranties in this subsection.

F. **Termination.** Notwithstanding any other provision hereof, the Village may terminate this Agreement at any time upon 15 days prior written notice to the Consultant. In the event that this Agreement is so terminated, the Consultant shall be paid for Services actually performed and reimbursable expenses actually incurred, if any, prior to termination, not exceeding the value of the Services completed as determined as provided in Exhibit 1. The Consultant may also terminate the Agreement in the event the Village fails to make payment for services rendered, but only after the Consultant has provided written notice to the Village of the lack of payment and allowed the Village 30 days to make payment or contest the payment or amount.

G. **Term.** The time of performance of this Agreement, unless terminated pursuant to the terms of this Agreement, shall expire on the date the Village determines that all of the Services under this Agreement are completed or upon final payment to Consultant. A determination of completion shall not constitute a waiver of any rights or claims which the Village may have or thereafter acquire with respect to any breach hereof by the Consultant or any right of indemnification of the Village by the Consultant.

H. **Compliance with Laws and Grants.** Consultant shall give all notices, pay all fees, and take all other action that may be necessary to ensure that the Services are provided, performed, and completed in accordance with all required governmental permits, licenses, or other approvals and authorizations that may be required in connection with providing, performing, and completing the Services, and with all applicable building and zoning statutes, ordinances, rules, and regulations, and the Fair Labor Standards Act; any statutes regarding qualification to do business; any statutes prohibiting discrimination because of, or requiring affirmative action based on, race, creed, color, national origin, age, sex, or other prohibited classification, including, without limitation, the Americans with Disabilities Act of 1990, 42 U.S.C. §§ 12101 *et seq.*, and the Illinois Human Rights Act, 775 ILCS 5/1-101 *et seq.* Consultant shall also comply with all conditions of any federal, state, or local grant received by Village and made known to the Consultant with respect to this Agreement or the Services.

Consultant shall be solely liable for any fines or civil penalties that are imposed by any governmental or quasi-governmental agency or body that may arise, or be alleged to have arisen, out of or in connection with Consultant's, or its subcontractors', performance of, or failure to perform, the Services or any part thereof.

I. **Default.** If it should appear at any time that the Consultant has failed or refused to prosecute, or has delayed in the prosecution of, the Services with diligence at a rate that permits completion of the Services in full compliance with the requirements of this Agreement, or has otherwise failed, refused, or delayed to perform or satisfy the Services or any other material requirement of this Agreement (***"Event of Default"),*** and fails to cure any such Event of Default within ten business days after the Consultant's receipt of written notice of such Event of Default from the Village, then the Village shall have the right, without prejudice to any other remedies provided by law or equity, to pursue any one or more of the following remedies:

1. **Cure by Consultant.** The Village may require the Consultant, within a reasonable lime, to complete or correct all or any part of the Services that are the subject of the Event of Default; and to take any or all other action necessary to bring the Consultant and the Services into compliance with this Agreement.

2. **Termination of Agreement by Village.** The Village may terminate this Agreement without liability for further payment of amounts due or to become due under this Agreement.

3. **Withholding of Payment by Village.** The Village may withhold from any payment, whether or not previously approved, or may recover from the Consultant, any and all costs, including attorneys' fees and administrative expenses, incurred by the Village as the result of any Event of Default by the Consultant or as a result of reasonable actions taken by the Village in response to any Event of Default by the Consultant.

J. **No Additional Obligation.** The Parties acknowledge and agree that the Village is under no obligation under this Agreement or otherwise to negotiate or enter into any other or additional contracts or agreements with the Consultant or with any vendor solicited or recommended by the Consultant.

K. **Village Board Authority.** Notwithstanding any provision of this Agreement, any negotiations or agreements with, or representations by the Consultant to vendors shall be subject to the approval of the Village Board of Trustees. The Village shall not be liable to any vendor or other third party for any agreements made by the Consultant, purportedly on behalf of the Village, without the knowledge and approval of the Village Trustees.

L. **Mutual Cooperation.** The Village agrees to cooperate with the Consultant in the performance of the Services, including meeting with the Consultant and providing the Consultant with such non-confidential information that the Village may have that may be relevant and helpful to the Consultant's performance of the Services. The Consultant agrees to cooperate with the Village in the performance of the Services to complete the work and with any other consultants engaged by the Village.

M. **News Releases.** The Consultant shall not issue any news releases or other public statements regarding the Services without prior approval from the Village

N. **Ownership.** Designs, drawings, plans, specifications, photos, reports, information, observations, calculations, notes, and any other documents, data, or information, in any form, prepared, collected, or received by the Consultant in connection with any or all of the Services to be performed under this Agreement **("Documents'1** shall be and remain the exclusive property of the Village. At the Village's request, or upon termination of this Agreement, the Consultant shall cause the Documents to be promptly delivered to the Village upon payment of all sums due and owing Consultant under the Agreement. Any reuse of Documents other than for the purposes of this Agreement shall be at Village risk and Consultant shall not be liable for any reuse of the Documents.

0. **GIS Data.** ***[NOTE:*** **Use *this only if applicable]*** The Village has developed digital map information through Geographic Information Systems Technology ***("GIS Data')*** concerning the real property located within the Village. If requested to do so by the Consultant, the Village agrees to supply the Consultant with a digital copy of the GIS Data, subject to the following conditions:

1. **Limited Access to GIS Data.** The GIS Data provided by the Village shall be limited to the scope of the Services that the Consultant is to provide for the Village;

2. **Purpose of GIS Data.** The Consultant shall limit its use of the GIS Data to its intended purpose of furtherance of the Services; and

3. **Agreement with Respect to GIS Data.** The Consultant does hereby acknowledge and agree that:

a. **Trade Secrets of the Village.** The GIS Data constitutes proprietary materials and trade secrets of the Village and, shall remain the property of the Village;

b. **Consent of Village Required.** The Consultant will not provide or make available the GIS Data in any form to anyone without the prior written consent of the Village;

c. **Supply to Village.** At the request of the Village, the Consultant shall supply the Village with any and all information that may have been developed by the Consultant based on the GIS Data;

d. **No Guarantee of Accuracy.** The Village makes no guarantee as to the accuracy, completeness, or suitability of the GIS Data in regard to the Consultant's intended use thereof; and

e. **Discontinuation of Use.** At such time as the Services have been completed to the satisfaction of the Village, the Consultant shall cease its use of the GIS Data for any purpose whatsoever; and, upon request, an authorized representative of the Village shall be afforded sufficient access to the Consultant's premises and data processing equipment to verify that all use of the GIS Data has been discontinued.

SECTION 8. GENERAL PROVISIONS.

A. Amendment. No amendment or modification to this Agreement shall be effective unless and until such amendment or modification is in writing, properly approved in accordance with applicable procedures, and executed.

B. Assignment. This Agreement may not be assigned by the Village or by the Consultant without the prior written consent of the other party.

C. Binding Effect. The terms of this Agreement shall bind and inure to the benefit of the Parties hereto and their agents, successors, and assigns.

D. Notice. Any notice or communication required or permitted to be given under this Agreement shall be in writing and shall be delivered (i) personally, (ii) by a reputable overnight courier, (iii) by certified mail, return receipt requested, and deposited in the U.S. Mail, postage prepaid, (iv) by facsimile, or (v) by electronic internet mail ("e-mail"). Facsimile notices shall be deemed valid only to the extent that they are (a) actually received by the individual to whom addressed and (b) followed by delivery of actual notice in the manner described in either (i), (ii), or (iii) above within three business days thereafter at the appropriate address set forth below. E-mail notices shall be deemed valid and received by the addressee thereof when delivered by e-mail and (a) opened by the recipient on a business day at the address set forth below, and (b) followed by delivery of actual notice in the manner described in either (i), (ii) or (iii) above within three business days thereafter at the appropriate address set forth below. Unless otherwise expressly provided in this Agreement, notices shall be deemed received upon the earlier of (a) actual receipt; (b) one business day after deposit with an overnight courier as evidenced by a receipt of deposit; or (c) three business days following deposit in the U.S. mail, as evidenced by a return receipt. By notice complying with the requirements of this Subsection, each Party shall have the right to change the address or the addressee, or both, for all future notices and communications to such party, but no notice of a change of addressee or address shall be effective until actually received.

Notices and communications to the Village shall be addressed to, and delivered at, the following address:

Village of Schaumburg
714 S. Plum Grove Road
Schaumburg, Illinois 60193
Attention : Brent McQueen
E-mail: bmcqueen@schaumburg.com

Notices and communications to the Consultant shall be addressed to, and delivered at, the following address:

Consultant Firm Name: RJN GROUP
Street Address: 2655 Warrenville Road, Suite 225
City, State, Zip: Downers Grove, IL 60515
Attention: Michael Young
Facsimile: 630-682-4754
Email: myoung@rjnmail.com

E. **Third Party Beneficiary.** No claim as a third party beneficiary under this Agreement by any person, firm, or corporation other than the Consultant shall be made or be valid against the Village.

F. **Provisions Severable.** If any term, covenant, condition, or provision of this Agreement is held by a court of competent jurisdiction to be invalid, void, or unenforceable, the remainder of the provisions shall remain in full force and effect and shall in no way be affected, impaired or invalidated.

G. **Time.** Time is of the essence in the performance of this Agreement.

H. **Governing Laws.** This Agreement shall be interpreted according to the laws of the State of Illinois.

I. **Entire Agreement.** This Agreement constitutes the entire agreement between the parties and supersedes any and all previous or contemporaneous oral or written agreements and negotiations between the Village and the Consultant with respect to the Proposal and the Services.

J. **Waiver.** No waiver of any provision of this Agreement shall be deemed to or constitute a waiver of any other provision of this Agreement (whether or not similar) nor shall any such waiver be deemed to or constitute a continuing waiver unless otherwise expressly provided in this Agreement.

K. **Exhibit.** Exhibits 1 and 2, are attached hereto, and by this reference incorporated in and made a part of this Agreement. In the event of a conflict between the Exhibit and the text of this Agreement, the text of this Agreement shall control.

L. **Rights Cumulative.** Unless expressly provided to the contrary in this Agreement, each and every one of the rights, remedies, and benefits provided by this Agreement shall be cumulative and shall not be exclusive of any other such rights, remedies, and benefits allowed by law.

M. Counterpart Execution. This Agreement may be executed in several counterparts, each of which, when executed, shall be deemed to be an original, but all of which together shall constitute one and the same instrument.

[SIGNATURES FOLLOW]

VILLAGE OF SCHAUMBURG

By: _____
Village Manager

ATTEST:

By: _____
Village Clerk

CONSULTANT

By: Michael A. Young

TITLE: Senior Vice President

ATTEST:

By: Thomas Ronge

TITLE: REGIONAL MANAGER

EXHIBIT 1

SCOPE OF SERVICES

AGREEMENT AMOUNT

[TO BE PREPARED BY CONSULTANT AND ACCEPTABLE TO VILLAGE]

[INCLUDE HOURLY RATES, LUMP SUM AMOUNTS, REIMBURSABLE COSTS, SCHEDULE FOR LUMP SUM OR INSTALLMENT PAYMENTS, INVOICE FORMAT, ETC.]

[

March 13, 2026

Mr. Brent McQueen, P.E., CFM, CPESC
Engineering Division Manager, Engineering & Public Works
Village of Schaumburg
714 South Plum Grove Road
Schaumburg, Illinois 60193-4329

Subject: Proposal for Fiscal Year 2026-27 MWRD IICP Services – Annual Reporting, SSES, Design, Construction Management

Dear Mr. McQueen:

RJN Group, Inc. (RJN) is pleased to submit this proposal to provide Professional Engineering and Specialty Field Services to assist the Village of Schaumburg (Village) in meeting the Long-Term Program requirements of the Metropolitan Water Reclamation District of Greater Chicago (MWRD) Infiltration / Inflow Control Program (IICP).

This proposal outlines the eleventh year of work for the MWRD IICP. The following table provides a summary of the work completed in each of the previous years. Although the fiscal year 2014/15 is included in the summary, it primarily served as a planning and preparation year.

2014/15	- Flow Meter Purchase and Kickoff
2015/16	- Flow Meter Planning and Coordination - Walnut Basin Flow Monitoring - Replace Flow Meter Equipment Purchase
2016/17	- MWRD IICP Annual Reporting - Kessel/Braintree Basins Flow Monitoring - Walnut Basin SSES - GIS Collection of Rim Elevations and Locations - Walnut Lane Lift Station Study
2017/18	- MWRD IICP Annual Reporting - Walnut Lift Station Downstream Capacity Flow Monitoring - Kessel Park Basin SSSES - Walnut and Kessel Basin Rehab Design - Walnut Basin Construction Management/Observation
2018/19	- MWRD IICP Annual Reporting, Private Sector Program, and Long-Term Plan - Braintree Basin Flow Monitoring - North Braintree Basin SSES - North Braintree Basin Rehab Design - Walnut and Kessel Basins Construction Management/Observation
2019/20	- MWRD IICP Annual Reporting, Private Sector Program, and Long-Term Plan

2019/20	- Bode Rd LS and Cedarcrest Basins Flow Monitoring - Bode Rd LS Basin SSES and Survey - Bode Rd LS Basin Rehab Design - North Braintree Basin Rehab Construction Management/Observation - Walnut Basin Rehab Construction Management/Observation
2020/21	- MWRD IICP Annual Reporting - Downstream Walnut Basin Flow Monitoring - South Braintree Basin SSES - South Braintree Basin Rehab Design - Bode Rd LS Basin Rehab Construction Management/Observation
2021/22	- MWRD IICP Annual Reporting - South Braintree Basin Rehab Design - South Braintree Basin Point Repair Construction Management/Observation - East Schaumburg Flow Monitoring (Partial) - Braintree Basin Hydraulic Model - Jeffrey Ln and Illinois Ave CMP Assessment and Preliminary Design - Bode Rd Lift Station Force Main Assessment
2022/23	- MWRD IICP Annual Reporting - South Braintree Basin Rehab Design - South Braintree Basin Construction Management/Observation - ACP CCTV Assessment and Preliminary Design (over 10") - ACP (over 10") Point Repair Design - East Schaumburg Flow Monitoring Installs
2023/24	- MWRD IICP Annual Reporting - Downstream Walnut Basins 7 & 9 – MHI, Smoke Testing, and Dye Testing - ACP CCTV Assessment and Preliminary Design (10" and under) - South Braintree High Priority Lining Design - ACP (over 10") High Priority Lining Design - South Braintree Lining Construction Management/Observation - ACP Point Repair Construction Management/Observation - East Schaumburg Flow Monitoring (continued)
2024/25	- MWRD IICP Annual Reporting - Downstream Walnut Basins 7 & 9 – CCTV - ACP (10" and Under) Point Repair Design - ACP (over 10") High Priority Lining Construction Management/Observation - South Braintree High Priority Lining Construction Management/Observation
2025/26	- MWRD IICP Annual Reporting - SSES of Select Cedarcrest Area - ACP(10" and under) HP Lining, N Braintree and Bode LS Areas HP Manhole Rehab Design - ACP (10" and under) Point Repair, N Braintree and Bode LS Areas Manhole Rehab Construction Management/Observation - Flow Monitoring Post High Priority Rehab (Meter Installs)

As a reference, a map exhibit is attached in Exhibit D to show the work completed in previous years and the work proposed for the upcoming fiscal year as discussed with the Village.

The services to be provided under the MWRD IICP for Fiscal Year 2026/27 are as follows:

- MWRD IICP Annual Reporting
- SSES: High Peaking Factor areas in parts of Bode and Walnut Lane
    - Bode-04
    - WL-05
- Design: Select High Priority Defect Manhole Rehabilitation
    - Portions of Cedarcrest, Walnut, and Kessel areas
- Construction Management and Observation:
    - ACP (10" and under) High Priority Lining
- Flow Monitoring:
    - North Braintree Post High Priority Rehabilitation Benchmarking (continued)

MWRD Annual Reporting

As a reminder, MWRD reviewed the Village's Long-Term Operations and Maintenance Plan (LTOMP) and Private Sector Plan (PSP), and it was approved on March 22, 2021.

The annual paperwork for the MWRD IICP will be completed with assistance from Village staff. Now that the short-term program is complete, these services shift to the long-term program, with the seventh submittal due on March 1, 2027.

SSES For Select Bode and Walnut Lane Areas

The Village has completed SSES in all three high priority areas under the short-term program (Walnut, Kessel, and North Braintree). The MWRD's long-term requirements include continuing SSES at 2% of the system per year. This has been progressing with the SSES of the Bode Road Lift Station Areas in 2019/20, South Braintree basins in 2020/21, the Downstream Walnut Basins in 2023-2025, and Bode Basins in 2025/26. To date, the long-term requirements are being met, with the select high peaking factor meters basins next on the list for SSES. The chosen basins are BODE-04 and WL-05, which have 9.63 and 28.8 peaking factors, respectively, based on the full Village flow monitoring efforts and corresponding I/I analysis.

Per the Village GIS, basins BODE-04 and WL-05 include 26,020 linear feet of sanitary sewer and 119 sanitary manholes. The SSES work includes smoke testing, dye flooding, manhole inspection, and CCTV review with recommendations. See Exhibit A for the detailed scope of services as they relate to the SSES activities. As with previous studies, the Village will be providing the sewer televising services, SewerAI (via RJN's partnership agreement) will be utilized to PACP code the CCTV, and RJN will be responsible for QC and analysis of the footage.

Design and Bidding Engineering Services

The engineering services for 2026/27 will be manhole rehabilitation design and bidding services for previously inspected manholes. The basins for manhole rehabilitation design and bidding services include:

- Bode-00, 01, 02, and 03 (inspected in 2019)
- SCHMWL-01, 02, 03, and 04 (inspected in 2016)
- Kessel-01 (inspected in 2021)

The design associated in this proposal includes rehabilitation of High Priority defects identified from manhole inspection activities ranging back to 2016. It is imperative that these efforts are completed in order to maintain good standing with the MWRD IICP and the requirements to fix High Priority defects within 3 years. While the time constraints for rehabilitation have not been met up to this point, due to budget limitations, MWRD has been satisfied with the efforts put forth in fixing the immediate needs of the mainline sewers and laterals. The high priority manhole rehabilitation will be designed and bid in accordance with the construction budget that was approved by the Village. It is expected to include manhole lining, replacement, grading, and other rehabilitation techniques. The design and bidding will be completed near the end of fiscal year 2026/27 in order to complete construction in the 2027/28 fiscal year.

Following this design, the oldest remaining manhole inspections in need of rehabilitation will be from 2020, and the Village will be in a good position for design and construction for those identified high priority defects in subsequent years.

Construction Engineering Services

The construction services will be Construction Management and Observation of the Small ACP (10" and under) High Priority Lining, for which the design was completed in 2025/26. The scope of construction is anticipated to include services for the following work: approximately 16,130 LF of sewer cleaning, televising, and lining (6" - 10" diameter), one (1) point repair, cutting eleven (11) protruding taps, dye testing of eleven (11) existing service connections, reinstatement of two-hundred fourteen (214) laterals, grouting of one-hundred twenty-six (126) laterals, cleaning and televising of ninety (90) laterals, lining of eighty-eight laterals (88), traffic control and protection, restoration and other related and incidental work. The rehabilitation shall be performed by private contractors, chosen through bidding, while being managed and supervised by RJN construction staff.

Flow Monitoring Services

Flow Monitors were installed in 2025/26 in order to capture data from the higher precipitation season in the areas that have had all high priority defects addressed. These basins include Brain-01, 02, 03, 04, 05, and 06 (referred to as North Braintree). Four months of the monitoring period and the analysis will be part of this project. The intention of the monitoring period is to assess the progress of the I/I remediation efforts that the Village has been implementing and benchmark these new I/I levels for these basins.

Program Management & Clarity™

Overall management and planning of the sanitary program to meet MWRD requirements will also be provided. Hours for project management will be allocated in each task described hereinabove.

RJN will provide access to its online data hosting platform **Clarity™**, that includes status of data collection, access to data collected, and all field collected media.

Assuring Quality and Safety

RJN is committed to providing **quality** deliverables. The data collected as a part of this project will be critical in evaluating the Village's sanitary system. RJN's internal quality control (QC) tools within our in-house data management software, as well as our corporate training and QC processes in place will ensure that the project will provide value for the Village.

As an employee-owned firm, RJN's commitment to the **safety** of our employees, Village employees, and the public is paramount. That commitment to safety is demonstrated in our internally developed and audited safety program where our goal is to have all field staff, engineers, and project managers "RJN Safety Certified." Included in the certification is confined-space entry training, temporary traffic control, OSHA 10-hour, fall protection, and many more. Every project follows an RJN Health and Safety Plan (HASP) when completing any field work.

Price and Schedule Summary

This project will be invoiced on a Time and Material and Unit Price basis for a total not-to-exceed fee of **$406,572** (budgetary) as described in the following table and in detail in Exhibit B:

Task Description	FY2026/27 Cost
MWRD Annual Reporting	$14,000
SSES – Bode-04, WL-05	$89,353
Rehabilitation Design and Bidding – Manhole	$113,503
Construction Management – Small ACP HP Lining	$144,916
Flow Monitoring – North Braintree	$44,800
TOTAL	**$406,572**

The project is expected to be completed by April 30, 2027 based on a Notice to Proceed by May 31, 2026. Complete Scope of Services, Pricing, Schedules, and Maps are provided in the following exhibits:

- Exhibit A – Scope of Services
- Exhibit B – Pricing
- Exhibit C – Schedule
- Exhibit D – Project Maps

We are looking forward to the opportunity to continue work with the Village of Schaumburg on this important project. It is our pleasure to submit this proposal to you. Please feel free to contact Tom at 224.587.7366 if you would like to discuss this proposal or have any questions.

Sincerely,

Thomas Romza, PE
Regional Manager

Michael Young, PE
Senior Vice President

EXHIBIT A
SCOPE OF SERVICES

RJN is proposing the following scope of services to conduct the Fiscal Year 2026/27 MWRD IICP Services for the Village of Schaumburg.

A. Project Kickoff

1. Conduct an in-person kickoff meeting with Village staff to discuss the project.
2. Prepare agenda, meeting minutes, and anticipated schedule.
3. Discuss logistics of details within each task of the project.

B. MWRD Annual Reporting

1. Work with the Village to compile the annual submittal to MWRD for Article 8. RJN will complete the following forms;
    a. Long-Term Requirement Annual Summary Report;
    b. High Priority Deficiency Form;
    c. Summary of rehabilitation plan, including a Capital Improvement Program (CIP) as applicable; and
    d. Prioritization/Activity Map Update.
2. Submit completed MWRD forms.
3. Provide overall management of the MWRD program.

C. Cedarcrest Area SSES of basins Bode-04 and WL-05

1. Smoke Testing
    a. Prepare a draft resident smoke testing notification letter for the RJN to send to the affected residents and business owners. The letters will include RJN contact information for use during the smoke testing. If desired, these letters can be formatted as a public service announcement, billing insert, and/or used as a Reverse 911 message sent by the Village. If necessary, provide bilingual letter in Spanish.
    b. Prepare smoke testing door hangers to be hung by RJN staff at each address less than one week prior to smoke testing. The door hangers will also include RJN contact information and can be bilingual if necessary.
    c. Notify the Village and the local fire and police departments of planned smoke testing activities, including daily updates.
    d. Provide equipment, personnel, and smoke as necessary for smoke testing.
    e. During smoke testing, erect smoke testing signs near the testing area and answer resident and Village questions on-site as well as through phone calls.
    f. Use handheld electronic data collection equipment for collecting smoke testing data.
    g. Smoke test the sanitary sewers as outlined, approximately **26,020** linear feet.
    h. GPS locate each identified defect and take a minimum of one digital photograph of each defect.

i. Upload and provide access to smoke testing data and photos on the web viewer Clarity®.

2. Dyed Water Flooding
   a. Provide equipment, personnel, and dye as necessary for dyed water flooding. Water to be provided by Village.
   b. Work with Village-provided televising staff or subcontractor to perform televising during dyed water flooding setups. **Subconsultant services are not included in this proposal, only coordination.**
   c. Set up and complete dyed water flooding as outlined, for up to **2 setups**. Document results with digital photographs of the dye test setup and if possible dyed water entering the sewer (where applicable).
   d. Locate each identified defect relative to segment manholes and take at least one digital photograph or video of each defect (where applicable).
   e. Upload and provide access to dyed water flooding data on the web viewer Clarity®.
3. Manhole Inspection
   a. Provide equipment and personnel as necessary for manhole inspections, up to **119** manholes.
   b. Use handheld electronic data collection equipment for collecting manhole inspection data.
   c. Complete surface manhole inspections for manholes as outlined. Collect the following attribute data, as it can be determined:
      i. Manhole diameter and material;
      ii. Connecting sewer diameters, invert measurements, and flow direction;
      iii. GPS data of the manhole x, y, and z coordinates.
   d. Identify and document manhole condition, including:
      i. Direct evidence of I/I;
      ii. Open pickholes in lid;
      iii. Cover, frame, adjusting ring, and seal condition, including needed adjustments;
      iv. Cone condition and defects;
      v. Wall condition and defects;
      vi. Trough and bench condition and defects; and
   e. Take a minimum of 3 digital photographs at each manhole structure
      i. Surrounding area;
      ii. Manhole cover; and
      iii. Topside - looking down;
   f. Take a 360-degree video at each structure using a remote camera to provide a 360-degree view of the entire structure.
   g. Upload and provide access to manhole inspection data and media on the web viewer Clarity®.
   h. Use data collected through field services to provide updates needed to the Village GIS database. Mapping updates may include:

i. Addition of structures located during field investigations;
ii. Updating of structure location;
iii. Removal of structures confirmed to not exist;
iv. Updating connectivity and flow direction.

i. Provide updates to Village GIS geodatabase in a data transfer with Village staff.
j. Coordinate with Village GIS staff for "check-in/check-out" procedures.
k. Assist the Village with incorporation of changes and information into Village GIS infrastructure and coordinate with other Village consultants on incorporation of GIS data.

4. CCTV Review
   a. Provide autocoding software and coordination for Village CCTV, up to **26,020** linear feet.
   b. Upload and provide access to CCTV data and videos on the web viewer Clarity®.
   c. Provide coordination with the Village's televising crew for areas to be televised and obtaining televising videos.
   d. Provide equipment and personnel as necessary for televising video QC.
   e. Review and QC the CCTV using PACP-certified personnel and PACP coding standards and edit as necessary.
5. Analysis and Report
   a. Provide data analysis as follows:
      i. Compile field data and develop complete list of defects.
      ii. Map results in GIS.
      iii. Assign an estimated flow to each defect; and
      iv. Determine a level of severity and/or preliminary rehabilitation method for each manhole, pipe, or identified defect;
      v. Create a summary of estimate cost.
      vi. Development of a detailed rehabilitation schedule is not included in the scope but can be added if requested by the Village.
   b. Organize data from individual field services into a comprehensive summary report.
   c. Provide the following information for the summary report:
      i. Summary of work completed;
      ii. Map(s) of inspections, defects, and SSES findings.
      iii. Summary of deficiencies observed, and preliminary recommendations developed.
      iv. List(s) and map(s) of preliminary rehabilitation recommended.
      v. Recommendations for follow-up SSES work.
   d. Provide digital copies of data, GIS geodatabases, and photographs.

D. Design and Bidding Engineering Services

1. Bode-00, 01, 02, and 03, SCHMWL-01, 02, 03, and 04, Kessel-01 High Priority Manhole Rehabilitation Design and Bidding:

a. Identify high priority manhole repairs, manholes assessed for rehabilitation from 2016, 2019, and 2021 inspections. Review recommended rehabilitation methods with Village to confirm use of the most effective approach, based on cost, location, I/I reduction, structural improvement, and Village standards.
b. Provide the following field checks:
    i. Identify surface restoration requirements (as applicable);
    ii. Identify potential traffic control needs during construction; and
    iii. QA/QC manhole recommendations
c. Prepare detailed schedules and bid tab for recommended manhole rehabilitation.
d. Prepare manhole rehabilitation exhibits to be included in the Bid Package, including the following:
    i. Manhole rehabilitation location exhibits; and
    ii. Project and Village specific Details & General Notes (if needed).
e. Prepare bid package with plans, schedules, Village front end bid documents, and detailed specifications. Prepare draft bidding documents for Village review.
f. Prepare an opinion of probable construction cost.
g. Bidding Assistance:
    i. Send advertisement to expected bidders;
    ii. Prepare Addenda;
    iii. Respond to Contractors' questions; and
    iv. Prepare letter of recommendation for award.

E. Construction Engineering Services

1. Small ACP (10" and under) Sanitary Sewer High Priority Lining Construction Management and Observation:
    a. Pre-Construction Assistance:
        i. Prepare Contract Documents for execution by Village and Contractor. Review Contractor's insurance documents.
        ii. Coordinate and attend preconstruction meeting. Prepare and distribute meeting minutes.
        iii. Review Contractor's shop drawings and other construction submittals, traffic control plans, pre-construction surface videos and construction phasing.
    b. Ensure contractor provides notification to the residents of impacts to sewer service and access to driveways.
    c. Provide a combination of full and part-time construction observation for the duration of the project. RJN proposes to be on-site full time when the point repairs are completed. Part-time observation will be provided for restoration, manhole rehab, and lining. Part-time supervision will be approximately four hours per day, when the Contractor is onsite and working. This proposal is

based on providing a total of 340 hours of full and part-time construction observation services.

d. Provide daily documentation of the construction activities when on-site, including maintaining a daily project journal, taking digital photographs of all phases of the project, and taking measurements for all quantities installed. RJN will provide access of daily reports to the Village for review via Clarity®, the RJN online platform.
e. Provide periodic inspection of traffic control measures to ensure roadways remain open and driveways/sidewalks are not blocked for extended periods. Identify potential traffic control and surface rehabilitation needs during construction, observe construction phase J.U.L.I.E. locates and identify potential utility conflicts for locations requiring excavation.
f. Alert the Contractor if equipment or materials are being installed prior to material submittal approval or if the wrong materials are being used. Provide field checks of materials and equipment, including enforcement of material testing.
g. Inspect each manhole and surrounding area during and after construction, to ensure no damage has occurred. This includes the final walk through, preparation of punch list, and final inspection.
h. Provide observation services during construction testing where applicable. Review testing documentation submittals for compliance with plans and specifications. Prepare a preliminary and final punchlist. Submit to the Village for review and incorporate Village's comments. Submit to Contractor for completion.
i. Provide personnel as necessary for pre/post rehab televising video review. Review sewer televising videos using PACP-certified personnel. Identify work completed that is in compliance with the Contract Documents and any deficiencies in the final work product.
j. Provide general project management and coordinate meetings with Village and Contractor as agreed upon at preconstruction meeting. Coordinate project with the Village, and Contractor, including updates on progress. Provide contract management, including review of Contractor's payment requests, preparation of change orders, coordination of contract closeout and preparation of a final acceptance letter.
k. Obtain as-built documents from the Contractor and prepare for the Village a set of final construction documents in original AutoCAD or GIS formats. Obtain project specific rehabilitation changes to the Village's collection system and provide to the Village for inclusion in their GIS. Prepare a GIS layer update of the rehabilitation work and rehabilitation locations.
l. Prepare and provide record drawings from the contractor's as-built plans.

F. **North Braintree Post High Priority Rehabilitation Flow Monitoring**

Six (6) Village owned flow monitors and two (2) RJN rain gauges were installed in fiscal year 2025/26. The data collection and analysis of the flow monitoring is part of this project and is outlined as follows:

1. Provide meter and rain gauge maintenance as necessary to keep equipment in proper operation for the duration of the monitoring period.
2. Perform a total of five calibration measurements during the flow monitoring period.
3. Procure spare parts and replacement equipment, such as batteries, and desiccants, as needed to keep meters and rain gauges working and within operating standards. Meter and sensor replacement is not included for Village-owned meters.
4. Perform final calibration measurements at each site and remove the flow meters and rain gauges. Clean and return Village-owner flow meter equipment.
5. Upload and provide access to flow monitoring data and photos on the web viewer Clarity®
6. Process the collected raw data. Analyze the processed data for wet- and dry-weather flow patterns. Create hydrographs for each meter and determine wet-weather peaking factors at standard storm recurrence and durations for each basin.
7. Perform an inflow and infiltration analysis, including:
    a. Inflow peaking factors
    b. Regression analysis for peaking factor prediction
    c. Scattergraphs and hydrographs
    d. Capacity analysis including downstream control and surcharging assessment
    e. Post rehabilitation I/I mitigation assessment
8. Provide the following information for the summary report:
    a. Details on each meter and rain gauge location
    b. Summary of the flow and rainfall data collected
    c. Conclusions from the flow metering, including evidence of downstream control, hydraulic bottlenecks, levels of infiltration and inflow (I/I), and a comparison to historical I/I analysis.
    d. Adequacy of the existing system to handle existing flows
    e. Recommendations for the next appropriate steps including reduction in I/I
9. Provide digital copies of data, GIS geodatabases, and photographs.

Items Requested from the Village

1. Access to structures for inspection. Assistance locating or opening seized/buried manholes as required. Assist RJN to access backyards when necessary.
2. Assistance with traffic control in high traffic areas, as necessary.
3. Sewer televising for CCTV review and during Dyed Water Flooding inspections and submittal of videos and reports
4. Water for Dyed Water Flooding inspections.
5. Upload into autocoding software "usable" CCTV of sanitary sewers.

6. Tree removals, as necessary, prior to the point repair work.
7. Help coordinating and communicating with all project stakeholders and residents.
8. Provide GIS data as necessary.
9. Review and comment on prepared bidding documents including any project specific modifications for this project.
10. Publish construction bid using the Village's standard procurement procedures.
11. Coordination with RJN in answering bid-related questions in formal addenda.

EXHIBIT B
PRICING

Pricing for the FY 2026/2027 IICP Services project is as follows.

Pricing Terms for Invoicing: Time and Materials, Unit Price

Not-To-Exceed Total Cost: $406,572

Task #	Task Description	Units	Quantity	Hours / Cost/Unit	Cost
1000	MWRD IICP Annual Reporting			85	$ 14,000.00
1001	Long-term requirements annual summary report			22	$ 3,310.00
1002	High priority deficiency form			11	$ 1,820.00
1003	CIP Planning			14	$ 2,278.00
1004	Prioritization/activity map updates			13	$ 1,861.00
1005	2025/26 program management services			25	$ 4,731.00
2000	SSES of Meter Basins Bode-04 and WL-05			543	$ 89,353.00
2001	Smoke Testing (26,020 linear feet) and Recommendations			245	$ 31,877.00
2002	Dyed Water Flooding and Recommendations (2 setups)			40	$ 5,335.00
2003	Manhole Inspection (119 manholes), Survey, and Recommendations			141	$ 18,540.00
2004	CCTV Autocode/QC and Recommendations (26,020 linear feet)			46	$ 16,583.00
2005	Final Analysis and Draft/Final Report			71	$ 11,416.00
2006	Direct Costs (Equipment, Mailings, Mileage, Etc...)			-	$ 5,602.00
3000	Rehabilitation Design - Manholes			688	$ 113,503.00
3001	Bode-00, 01, 02, 03			262	$ 42,964.00
3002	SCHWL-01, 02, 03, 04			262	$ 42,964.00
3003	Kessel-01			126	$ 20,703.00
3004	Manhole Rehab Bidding Services			38	$ 6,872.00
4000	Construction Management and Observation			801	$ 144,916.00
4001	ACP (10" and Under) HP Lining			801	$ 141,074.00
4002	Direct Costs (mileage)			-	$ 3,842.00
	TOTAL T&M			**2117**	**$ 361,772.00**
5000	Flow Monitoring	Units	Quantity	Cost/Unit	$ 44,800.00
5001	Meter/RG Cals, Maint, and Data Review (4-months)	Me-Mo	24	$ 1,050.00	$ 25,200.00
5002	Meter Removal and Return, Finalization	Meter	6	$ 1,350.00	$ 8,100.00
5003	Analysis and Reporting	LS	1	$11,500.00	$ 11,500.00
	TOTAL UNIT PRICE				**$ 44,800.00**
	TOTAL CONTRACT AMOUNT				**$ 406,572.00**

Hourly Rate Schedule

	Classification	2026 Rates*
PD	Project Director	$270.00
SPM	Senior Project Manager	$240.00
PM	Project Manager	$205.00
SCM	Sr. Construction Manager	$185.00
CM	Construction Manager	$170.00
CO	Construction Observer	$150.00
SPE	Senior Project Engineer	$175.00
PE	Project Engineer	$160.00
EI	Engineer I	$145.00
GSS	GIS Specialist	$140.00
GIS	GIS Analyst	$120.00
SDA	Senior Data Analyst	$140.00
DA	Data Analyst	$120.00
FM	Field Manager	$125.00
FS	Field Supervisor	$115.00
FT	Field Technician	$105.00
AS	Administrative Support	$115.00
	**Rates valid through 12/31/2026 and are subject to an annual increase.*	

Notes

- The Hourly Rate Schedule is valid until April 30, 2027. Following that date, rates may be subject to an annual increase.

Contract Option

This contract can be amended to include additional work upon joint approval by the Village and RJN.

EXHIBIT C
PROPOSED SCHEDULE

RJN is prepared to start work immediately upon an Agreement. The schedule for this project is summarized as follows:

Task	Timeline
MWRD Annual Reporting	Submit draft of MWRD submittal by February 17, 2027, with submittal to MWRD by **March 1, 2027** deadline.
SSES of BODE-04 and WL-05	Planning will begin upon NTP, with all SSES activities and reporting expected to be complete by **February 2027**.
Rehabilitation Design and Bidding	Design shall be completed by **March 2027 while** Bidding will start in **April of 2027**.
Construction Management and Observation	Pending plan review by the Village, construction is expected to begin in **June of 2026**.
Flow Monitoring North Braintree	Flow monitors are installed and reporting is expected by **October 2026**

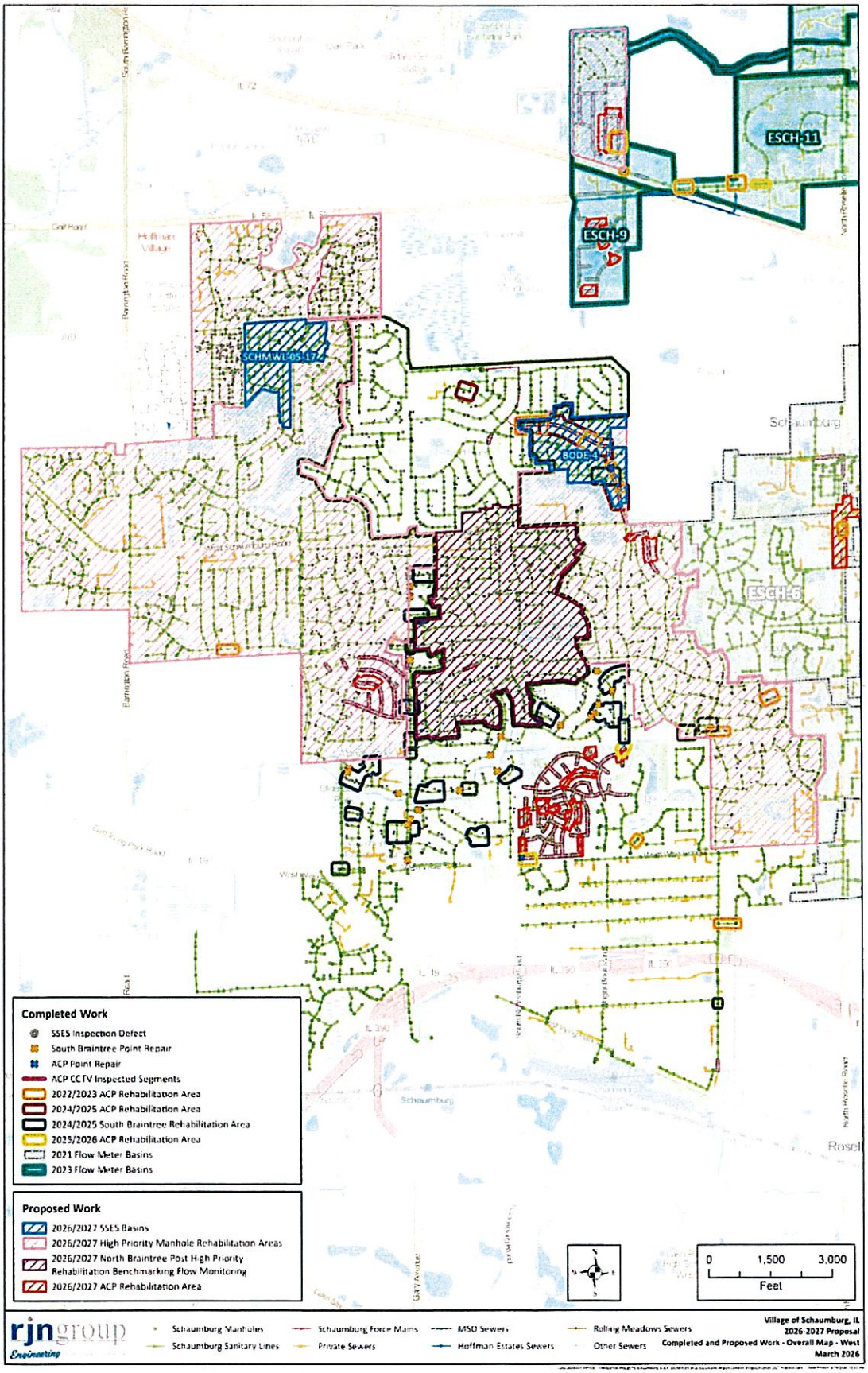
ESCH-11
ESCH-9
SCHMWL05-17A
BODE-4
ESCH-6
Completed Work
SSES Inspection Defect
South Braintree Point Repair
ACP Point Repair
ACP CCTV Inspected Segments
2022/2023 ACP Rehabilitation Area
2024/2025 ACP Rehabilitation Area
2024/2025 South Braintree Rehabilitation Area
2025/2026 ACP Rehabilitation Area
2021 Flow Meter Basins
2023 Flow Meter Basins
Proposed Work
2026/2027 SSES Basins
2026/2027 High Priority Manhole Rehabilitation Areas
2026/2027 North Braintree Post High Priority Rehabilitation Benchmarking Flow Monitoring
2026/2027 ACP Rehabilitation Area
0
1,500
3,000
Feet
rjngroup Engineering
Schaumburg Manholes
Schaumburg Sanitary Lines
Schaumburg Force Mains
Private Sewers
MSD Sewers
Hoffman Estates Sewers
Rolling Meadows Sewers
Other Sewers
Village of Schaumburg, IL
2026-2027 Proposal
Completed and Proposed Work - Overall Map - West
March 2026

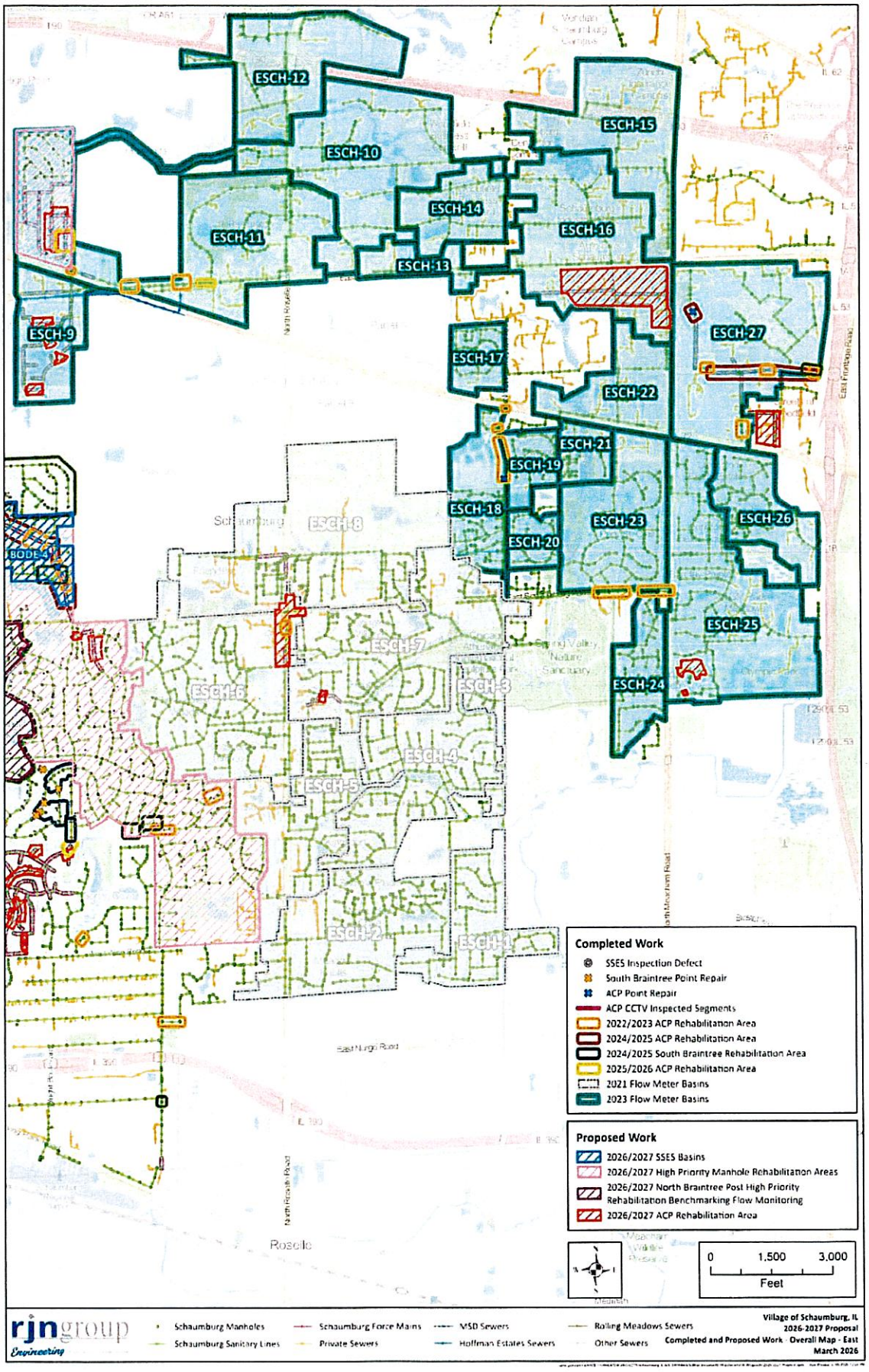
ESCH-12
ESCH-10
ESCH-11
ESCH-14
ESCH-13
ESCH-15
ESCH-16
ESCH-9
ESCH-17
ESCH-27
ESCH-22
ESCH-21
ESCH-19
ESCH-18
ESCH-23
ESCH-26
ESCH-20
ESCH-25
ESCH-24
ESCH-8
ESCH-7
ESCH-6
ESCH-3
ESCH-4
ESCH-5
ESCH-2
ESCH-1
BODE-1
Schaumburg
Roselle
East Nuge Road
North Roselle Road
North Meacham Road
East Frontage Road
Spring Valley Nature Sanctuary
Completed Work
SSES Inspection Defect
South Braintree Point Repair
ACP Point Repair
ACP CCTV Inspected Segments
2022/2023 ACP Rehabilitation Area
2024/2025 ACP Rehabilitation Area
2024/2025 South Braintree Rehabilitation Area
2025/2026 ACP Rehabilitation Area
2021 Flow Meter Basins
2023 Flow Meter Basins
Proposed Work
2026/2027 SSES Basins
2026/2027 High Priority Manhole Rehabilitation Areas
2026/2027 North Braintree Post High Priority Rehabilitation Benchmarking Flow Monitoring
2026/2027 ACP Rehabilitation Area
0
1,500
3,000
Feet
rjngroup Engineering
Schaumburg Manholes
Schaumburg Sanitary Lines
Schaumburg Force Mains
Private Sewers
MSD Sewers
Hoffman Estates Sewers
Rolling Meadows Sewers
Other Sewers
Village of Schaumburg, IL
2026-2027 Proposal
Completed and Proposed Work - Overall Map - East
March 2026

EXHIBIT2

INSURANCE COVERAGES

A. Worker's Compensation and Employer's Liability with limits not less than:

(1) Worker's Compensation: Statutory;

(2) Employer's Liability:

$500,000 injury-per occurrence

$500,000 disease-per employee

$500,000 disease-policy limit

Such insurance shall evidence that coverage applies in the State of Illinois.

B. Comprehensive Motor Vehicle Liability with a combined single limit of liability for bodily injury and property damage of not less than $1,000,000 for vehicles owned, non-owned, borrowed or rented.

All employees shall be included as insureds.

C. Comprehensive General Liability with coverage written on an "occurrence" basis and with limits no less than:

$1,000,000 Bodily Injury and Property Damage $2,000,000 Aggregate

Coverages shall include:

Broad Form Property Damage Endorsement

Broad Form Contractual Liability (must expressly cover the indemnity provisions of the Contract)

D. Umbrella Policy or Excess liability Insurance with a limit of liability of not less than $2,000,000.

The required coverages may be in any combination of primary, excess, and umbrella policies. Any excess or umbrella policy must provide excess coverage over underlying insurance, except professional liability, on a following-form basis such that when any loss covered by the primary policy exceeds the limits under the primary policy, the excess or umbrella policy becomes effective to cover such loss.

E. Professional Liability Insurance. With a limit of liability of not less than $1,000,000 per claim/$2,000,000 in the aggregate and covering Consultant against all sums that Consultant may be obligated to pay on account of any liability arising out deviation from the professional standard of care set forth in the Agreement. If the policy is a claims made policy, it shall remain in effect for 5 years after the work has been completed.

F. Village as Additional Insured. Village shall be named as an Additional Insured on all policies except for:

Worker's Compensation

Professional Liability

Each such additional Insured endorsement shall identify Village as follows: Village of Schaumburg, including its Board members and elected and appointed officials, its officers, and employees.

G. Other Parties as Additional Insureds. In addition to Village, the following parties shall be named as additional insured on the following policies:

Additional Insured	Policy or Policies
_____	_____
_____	_____

The Consultant will provide certificates of insurance evidencing the types and limits of insurance specified. The certificates of insurance will specifically address each of the requirements noted. All insurance noted is primary and in no event will be considered contributory to any insurance purchased by the Village.

The same full insurance coverage provided to the named insured, whether it is the Consultant or a sub-contractor, shall be provided to the Village without any limitations or endorsements that might limit or exclude coverage.

Any and all deductibles or other forms of retention are the responsibility of the Consultant. All deductibles or other forms of retention are subject to the approval of the Village. Consultant will disclose to the Village in writing the amounts of any deductible or self-insured retentions on the insurance required under this contract.

Consultant waives any right of subrogation it may have or later acquire against the Village.

The Consultant shall not allow any subcontractor to commence work on their subcontract until the same insurance has been obtained by the subcontractor. The Consultant and their subcontractor(s) shall maintain all insurance required for not less than one (1) year after completion of this contract except professional liability which shall be for 5 years.

VILLAGE OF SCHAUMBURG

AGENDA ITEM SUMMARY

Recommendation to Approve an Agreement for the 90 North TIF Management Services with Michael Baker International
04/14/26
Village Board

Presenter: Brent R. McQueen, Engineering Division Manager
Lead Department: Engineering and Public Works

Account(s):	Budget:	Expense Request:
4369010-7454 (18008-30-300)	$550,000	$447,684

The budget status for this request is: Under Budget

Amount Under Budget: $102,316

Executive Summary:

The Village of Schaumburg issued a Request for Proposal (RFP) seeking qualified professional engineering and project management firms to provide contractual project support services for capital improvement and development projects within the 90 North Tax Increment Financing (TIF) District. Because the majority of the projects associated with the TIF occur within a limited timeframe, staff determined that a contract position, rather than a full-time staff person, would be the best option to assist with the increased project workload.

The selected TIF Project Manager will act as an extension of Village staff and provide project management services for Capital Improvement Projects (CIP) projects within the TIF District boundaries. The scope of the services provided by this position will vary based on projects budgeted in the TIF each year.

For the past three fiscal years, Chastain & Associates has provided project management support and engineering oversight services within the TIF District, in lieu of adding full-time staff. That agreement will conclude on April 30, 2026. Accordingly, the Village solicited proposals from qualified firms to provide these services for FY 26/27, with the option to extend the agreement for up to two additional one-year terms.

During FY 26/27, the TIF Project Manager is anticipated to assist with oversight of the following major projects:

- 90 North Park – Stage II
- 90 North Park – Stage III
- 90 North Pedestrian Bridge
- Hammond & Algonquin Intersection Improvements
- North Meacham Road Corridor Streetscape – Stage II
- Thoreau Drive Realignment

- Walden Subdivision Water and Sanitary Sewer Improvements

On February 20, 2026, staff released an RFP for the 90 North TIF Management Services. Five proposals were received. Engineering and Public Works staff reviewed and evaluated the submittals in accordance with the Village's consultant selection policy.

Based on the evaluation process, staff determined that Michael Baker International of Chicago, Illinois (Michael Baker), is the most qualified firm to provide the TIF Management Services. Michael Baker's personnel, including David Lawry and Scott Shirley, have demonstrated experience completing similar projects and maintain a strong working relationship with Village staff. The consultant will serve the Village as both the Program Manager and Project Manager.

The Village has included Project Management of 90 North TIF projects within its Capital Improvement Plan (CIP). The Village has budgeted $550,000 in the North Schaumburg TIF fund to pay for these services. Michael Baker submitted a proposal in the amount of $447,684 to perform project management services for the projects listed, which is under the budgeted amount.

Recommended Action:

The Village Manager recommends the Engineering and Public Works Committee recommend the Village Board authorize the Village Manager and Village Clerk to execute an agreement for the 90 North TIF Management Services with Michael Baker International of Chicago, IL, in the amount of $447,684, and approve the required Resolution.

ATTACHMENTS:
- Qualifications Table
- Proposal
- Resolution
- PSA

Qualifications Table
90 North TIF Project Management

AVERAGE RATINGS		BLA, Inc.		HLR, Inc.		Michael Baker International		Chastain & Associates, LLC		Procon Consulting	
Criteria	*Weight*	*Rating (0-100)*	*Total*	*Rating (0-100)*	*Total*	*Rating (0-100)*	*Total*	*Rating (0-100)*	*Total*	*Rating (0-100)*	*Total*
Technical Qualifications and Approach	20%	80.0	16.0	83.3	16.7	90.0	18.0	90.0	18.0	76.7	15.3
Project Team/Capabilities	30%	85.0	25.5	81.7	24.5	90.0	27.0	90.0	27.0	66.7	20.0
Municipal Experience	20%	83.3	16.7	83.3	16.7	90.0	18.0	90.0	18.0	63.3	12.7
Value	15%	83.3	12.5	83.3	12.5	88.3	13.3	85.0	12.8	60.0	9.0
Availability and Responsiveness	15%	90.0	13.5	88.3	13.3	90.0	13.5	90.0	13.5	70.0	10.5
Total		**84.2**		**83.6**		**89.8**		**89.3**		**67.5**	

PROPOSAL FOR

PROJECT MANAGEMENT FOR NORTH SCHAUMBURG TIF INFRASTRUCTURE / 2026-RFP-006

MARCH 6, 2026







Michael Baker INTERNATIONAL

SUBMITTED BY:
MICHAEL BAKER INTERNATIONAL, INC.

SUBMITTED TO:
VILLAGE OF SCHAUMBURG
ENGINEERING AND PUBLIC WORKS

Ogar Somo, P.E., CFM
Senior Civil Engineer
Village of Schaumburg
Department of Engineering and Public Works
714 S. Plum Grove Road
Schaumburg, IL 60193

Michael Baker INTERNATIONAL

RE: Project Management for North Schaumburg TIF Infrastructure (2026-RFP-006)

Dear Mr. Somo,

The North Schaumburg TIF District represents a major component of the Village of Schaumburg's (the Village) long-term economic development strategy and a central element of Schaumburg's multi-year capital planning efforts. With approximately $95.5 million in improvements anticipated over the next five years, the Village requires a project management partner who can provide the stability, structure, and experience necessary to oversee these investments and maintain momentum across an increasingly interconnected program.

The Village can maintain uninterrupted progress and protect its investments by partnering with a team that already understands the TIF program's operations, priorities, and challenges. Building on years of direct support to Schaumburg's TIF and EPW programs, Michael Baker International, Inc. (Michael Baker) offers immediate continuity with no onboarding, no loss of institutional knowledge, and no delay in execution. Our team of Illinois-licensed municipal engineering leaders, Dave Lawry, Scott Shirley, and Jeffrey Maczko, have been embedded in Schaumburg's project environment for years. With Scott transitioning to Michael Baker upon award and dedicated full-time to the TIF program, the Village receives consistent daily presence, rapid response, and seamless coordination with Village staff.

The Village can advance a complex, interdependent capital program with confidence by leveraging proven program-level management systems built for public-sector infrastructure delivery. Our national project controls, risk identification tools, and consultant management processes allow us to operate as an extension of Village staff, providing disciplined reporting, transparent budget tracking, and decision-ready information for the Engineering Division Manager and Village leadership. These systems support predictable scheduling, faster issue resolution, and proactive communication, key priorities for a program of this scale.

The Village can accelerate project delivery through immediate access to a multidisciplinary bench that strengthens in-house capacity without adding administrative burden. Our Chicago office provides roadway, drainage, construction management, traffic and signal, structural, and planning specialists who can quickly verify consultant deliverables, troubleshoot technical issues, and maintain momentum across all phases of the TIF program. This ready-to-deploy expertise allows the Village to address challenges in real time and reduces downstream risk during design, permitting, and construction.

Together, this combination of continuity, disciplined program management, and technical depth positions Michael Baker to guide the North Schaumburg TIF Infrastructure Program with stability, responsiveness, and strong alignment to Village priorities. We are committed to serving as a long-term partner dedicated to protecting the Village's investment and advancing its vision.

We appreciate your consideration and welcome the opportunity to continue supporting the Village. Should you have any questions or require additional information, please contact Dave Lawry at 847-417-4180 or david.lawry@mbakerintl.com. We acknowledge receipt of Addendum No. 1 and this proposal remains valid for 90 days from bid opening.

Sincerely,
MICHAEL BAKER INTERNATIONAL, INC.

Scott Rodseth, PE
Vice President / Office Executive
224-828-2911
scott.rodseth@mbakerintl.com

David Lawry, PE
Public Works / Municipal Technical Consultant
847-417-4180
david.lawry@mbakerintl.com

FIRM BACKGROUND

Michael Baker is a leading provider of engineering and consulting services with practices that encompass all facets of infrastructure, including design, civil engineering, planning, architecture, environmental, construction, and program management. For more than 85 years, the company has been a trusted partner to municipal governments, providing comprehensive services and solutions. The firm's more than 6,000 employees across nearly 100 locations are committed to *Making a Difference* for clients and communities through a culture of innovation, collaboration, and technological advancement.

Michael Baker's Chicago office opened in 1977 and currently has over 80 specialized staff, including municipal support engineers, technical managers, professional engineers, structural engineers, certified floodplain managers, and construction inspectors in-house. Below is a summary of our general firm background and experience.

Michael Baker
INTERNATIONAL

Chicago Office Expertise:

- Roadway Planning and Design
- Bridge Planning and Design
- Bridge Inspection and Load Rating
- Construction Services
- Traffic Engineering
- Traffic Signals
- Street Lighting
- Stormwater Planning and Design
- Permitting
- Green Infrastructure
- Wetlands
- Environmental Planning/NEPA
- Design-Build

MUNICIPAL ENGINEERING SERVICES

PROGRAM MANAGEMENT

Michael Baker delivers comprehensive program management services that help municipalities plan, coordinate, and implement complex, multi-year capital programs with clarity, discipline, and predictability. Our team integrates directly with local agencies to provide owner's-representative leadership, aligning scopes, schedules, budgets, and stakeholder expectations across dozens of interdependent projects.

We bring structured program controls, clear communication pathways, and transparent reporting practices that enable public agencies to make informed decisions quickly and confidently. From establishing program frameworks and developing procurement strategies to orchestrating consultant teams, maintaining interdepartmental alignment, and tracking progress in real time, our approach ensures that each project within the program advances in a coordinated, efficient, and fiscally responsible manner.

Our management services emphasize continuity, accountability, and risk-informed execution. We embed disciplined processes, such as integrated master scheduling, portfolio-level budget management, quality review procedures, action-item tracking, and structured issue escalation, to identify challenges early and maintain momentum across all phases of work. These capabilities are strengthened by our multidisciplinary in-house bench of engineers, planners, construction specialists, and technical reviewers who support rapid problem-solving without the delays of additional procurements.

Whether coordinating design and construction efforts, overseeing land acquisition dependencies, managing developer interfaces, or delivering complete, audit-ready documentation, Michael Baker provides the steady leadership and technical rigor required to help communities deliver high-impact capital programs on schedule, within budget, and aligned with long-term strategic goals.

TRANSPORTATION

Michael Baker works closely with local municipalities and state agencies in Illinois to enhance and maintain roadways, ensuring they serve all modes of transportation efficiently and safely. Our services encompass comprehensive highway planning, design, and construction, covering every phase from conceptual and preliminary engineering studies to final design and implementation. Our highway design projects are diverse and tailored to meet the unique needs of each community.

We specialize in developing new roadway corridors to improve connectivity and reduce congestion, offering integrated design and construction services for streamlined project delivery, and collaborating with private entities to fund and execute large-scale infrastructure projects. We also design intricate urban interchanges to enhance traffic flow and safety, address the specific needs of both rural and urban environments to ensure safe and efficient travel, and enhance intersections to reduce accidents and improve traffic movement.

Additionally, we promote alternative transportation modes by designing safe and accessible bike paths and pedestrian crossings, and create aesthetically pleasing and functional streetscapes that enhance the urban environment.

VILLAGE OF SCHAUMBURG
WALNUT LANE STP RESURFACING IMPROVEMENTS AND MULTI-USE PATH, PHASE I/PHASE II



STORM WATER/PERMITTING

As our population and metropolitan areas grow, the efficient storage and conveyance of clean, secure water, and the transport and disposal of residual wastes are vital to our well-being

Major rain events and natural disasters, such as hurricanes and floods, tax our nation's storm water and wastewater infrastructure. We understand the critical importance of our aging infrastructure, and we make it a priority to assist clients in continually improving these systems for future generations.

Our water professionals provide innovative consulting, planning, and engineering solutions for the entire spectrum of the water cycle. Protection and management of water resources starts at the watershed level and follows the movement of water through urban and agricultural areas, streams, lakes and reservoirs, water distribution systems, wastewater collection systems, and water/wastewater treatment plants. Our storm water team is experienced in storm water modeling, planning, designing, detention basins, culverts, flood control/ management, and watershed planning.

CONSTRUCTION ENGINEERING

Michael Baker provides innovative and cost-effective solutions to meet every modern construction project need. By partnering with our clients through all phases of construction, beginning with pre-design all the way through closeout, we are able to meet aggressive schedules safely and on budget. We provide qualified construction managers, inspectors, constructibility reviewers, schedulers, and estimators dedicated to adding value and driving efficiency for projects of all sizes.

As technologies evolve, we deliver creative ideas and advanced techniques to maintain and deliver even the most complex construction projects. We utilize e-Construction to provide electronic construction administration, management, and collaboration software and devices to strengthen workflow, increase transparency, improve safety, enhance quality, and save time and money.

We also use 4D Building Information Modeling (BIM) to maintain construction schedules and minimize conflicts and delays, which assists in the management and administration of complex construction projects.

Finally, we utilize sUAS drones to monitor construction progress and perform regular flights of project sites.

Elk Grove Village

Wellington Ave. and Leicester Rd. Over Lake Cosman Culvert Replacements



TRAFFIC ENGINEERING/SIGNALS

In today's world of rapidly growing travel demand and tighter social and financial constraints on new highway construction, traffic engineering is increasingly critical to the success of our transportation systems. We know that society can no longer simply build its way out of traffic congestion, and that creative traffic engineering is the key to operating existing highways more efficiently. At Michael Baker, we take traffic engineering seriously because we are keenly aware of the tremendous impact traffic has on our daily lives.

Traffic Analysis

Michael Baker has completed traffic studies and systems analysis to improve mobility for all users from small, suburban communities to large urban settings. Our team leverages VISSIM, CORSIM and SYNCHRO modeling to support these analysis. We've utilized modeling and 3D schematic design, to create visualizations/renderings to feature in the public and stakeholder involvements. Our traffic analysis can also include predictive safety analysis related to accident reduction and safety improvements.

Traffic Signals and Design

Michael Baker has provided engineering and design services for Traffic Signal Modernization projects with coordinated signal timing, PS&E design and system integration services for upgrades to city signals. Our team is dedicated to safety for all modal users by applying proven solutions including curb extensions, countdown pedestrian signals, reflectorized backplates, and APS push buttons.

STRUCTURAL PLANNING & DESIGN

Michael Baker addresses bridge design, construction, and preservation challenges with innovative and sustainable solutions. Leveraging our depth and versatility, we have partnered with clients on a full spectrum of bridge types – from conventional-grade separations to major, complex river crossings including trusses, arches, box girders, and cable-stayed bridges. Our expertise also extends to the design of culverts and pedestrian bridges, ensuring safe and efficient crossings for both vehicles and pedestrians.

Michael Baker as a firm consistently ranks as an ENR Top 5 Bridge Design firm and remains at the forefront of bridge innovation, demonstrating continued leadership by applying the latest advancements in bridge design, construction, and inspection to our projects. Our bridge teams collaborate nationwide to design and build innovative structures that serve as the backbone of our nation's infrastructure for the millions of people who safely travel across them each day.

IDOT

Cedar Street Extension Phases I & II Engineering Services

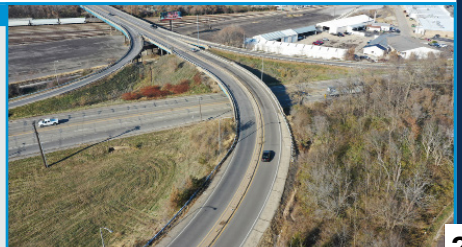

UNDERSTANDING OF THE SCOPE OF SERVICES

Schaumburg's North TIF is not a collection of stand-alone projects; it is a single, interdependent program whose success depends on disciplined coordination across transportation, utilities, parks, land acquisition, private development, and procurement timelines. The Village reinforces this by asking the TIF Project Manager to act as the Village's owner's representative for all aspects of the program, managing Village-hired consultants, integrating schedules and budgets, and reporting directly to the Engineering Division Manager over a multi-year term with an on site presence at EPW.

We understand that the Village's most immediate need is continuity and stability in program stewardship. As multiple North TIF projects advance in parallel, personalized attention and historical knowledge of the Village are necessary for program success. The emphasis on a single, accountable TIF Project Manager, available as needed, with a dedicated work area and a defined weekly cap, signals the Village's intent to restore predictability, visibility, and ownership across the portfolio without adding management workload to already engaged Village staff.

The program's near-term work plan illustrates how tightly these projects are linked. 90 North Park continues with Stage II construction support and Stage III design, high-visibility work that must be sequenced around the broader 90 North streets and development frontages to preserve access, coordinate public space features, and manage construction communications. At the same time, the 90 North Pedestrian Bridge is progressing from concept toward engineering with targeted federal funding (CMAQ) and required land acquisition, timelines that must be reconciled with development pacing on both sides of Meacham Road and with corridor streetscape decisions, so the bridge integrates cleanly into future site plans.



Conceptual rendering of the Meacham Road Pedestrian Bridge, a key 90 North TIF project providing a safe and seamless connection across Meacham Road.

On the roadway side, the Hammond Drive & Algonquin Road intersection requires ROW/easements, federal compliance, and staging that affects adjacent lighting and access; schedule shifts here can ripple into pedestrian accommodations and signal work if not managed proactively.

The North Meacham Road Corridor Stage II streetscape must be phased to maintain multimodal access while coordinating with development frontages, another place where developer schedules and municipal priorities must be synchronized to avoid rework. The Thoreau Drive Realignment is a program linchpin: straightening geometry, signals, utilities, drainage, and bicycle/pedestrian facilities to unlock development parcels and ensure operations at the Convention Center remain functional during construction. Decisions taken here directly affect staging windows and the order in which other projects proceed. It is understood certain development phases may allow aspects of the realignment efforts to be completed in concert with adjacent development activity by the developer, reducing the project management effort but

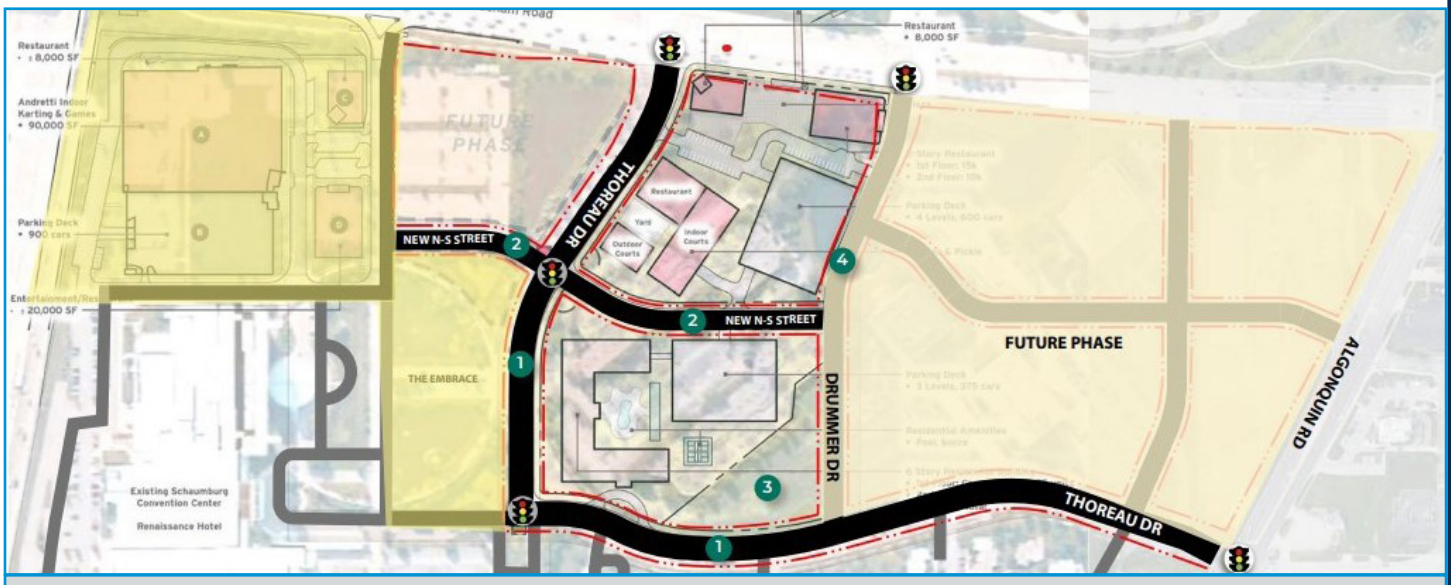

Conceptual layout of the proposed Thoreau Drive realignment within the North Schaumburg TIF District.

requiring greater coordination by the Program Manager of more possible developer-driven projects.

Underground systems create a second layer of interdependence. The Walden Subdivision Water and Sanitary Sewer improvements convert private systems to public and pair rehabilitation with new construction, easements, and coordination with roadway work. Sequencing must minimize service interruptions, match the realignment and streetscape staging, and anticipate development tie-ins so that pavement is opened only once and long-lead materials are procured on a schedule that protects TIF cash flow.

The Village has also defined a management standard for the TIF Project Manager that clarifies how performance will be measured. The role is expected to manage the TIF CIP budget and deliver a monthly budget status report; to issue a CIP Monthly Project Status Update using the Village's dashboard; to run monthly progress meetings with formal minutes and an Outstanding Action Item Log; to qualify and coordinate additional professional services through the Village's procurement process; to oversee design and construction phase responsibilities including preconstruction meetings and public-facing communications; to manage land acquisition activities; to review bids, changes, and pay applications; and to lead Lessons Learned at closeout–all while remaining independent from pursuing work on projects inside the TIF during the engagement. These requirements codify the Village's expectations for transparency, consistency, and compliance across the entire portfolio.

We recognize the pain points the Village wants solved:

- The burden of coordinating multiple consultants whose deliverables depend on one another
- The need to align Engineering and Public Works, Transportation, Community Development, Economic Development, Finance, and the Village Manager's Office around a single, shared schedule and budget
- The reality that internal staff capacity is focused on the broader CIP and cannot absorb a growing TIF portfolio without a dedicated, highly responsive program manager who reduces the Village's workload, not adds to it

In short, our understanding is that Schaumburg is seeking continuity of people and process, program-level integration across interdependent projects, disciplined budget and schedule controls, and a reliable communication engine that keeps decisions moving. The North TIF's success hinges on early identification of cross-project risks (ROW, utilities, federal coordination, development interfaces), integration of the CIP dashboard with a live dependency map, and a cadence that turns complex moving parts into clear, decision-ready information for leadership. That is precisely the role the Village has defined for the TIF Project Manager, and the role we are prepared to fulfill from day one.

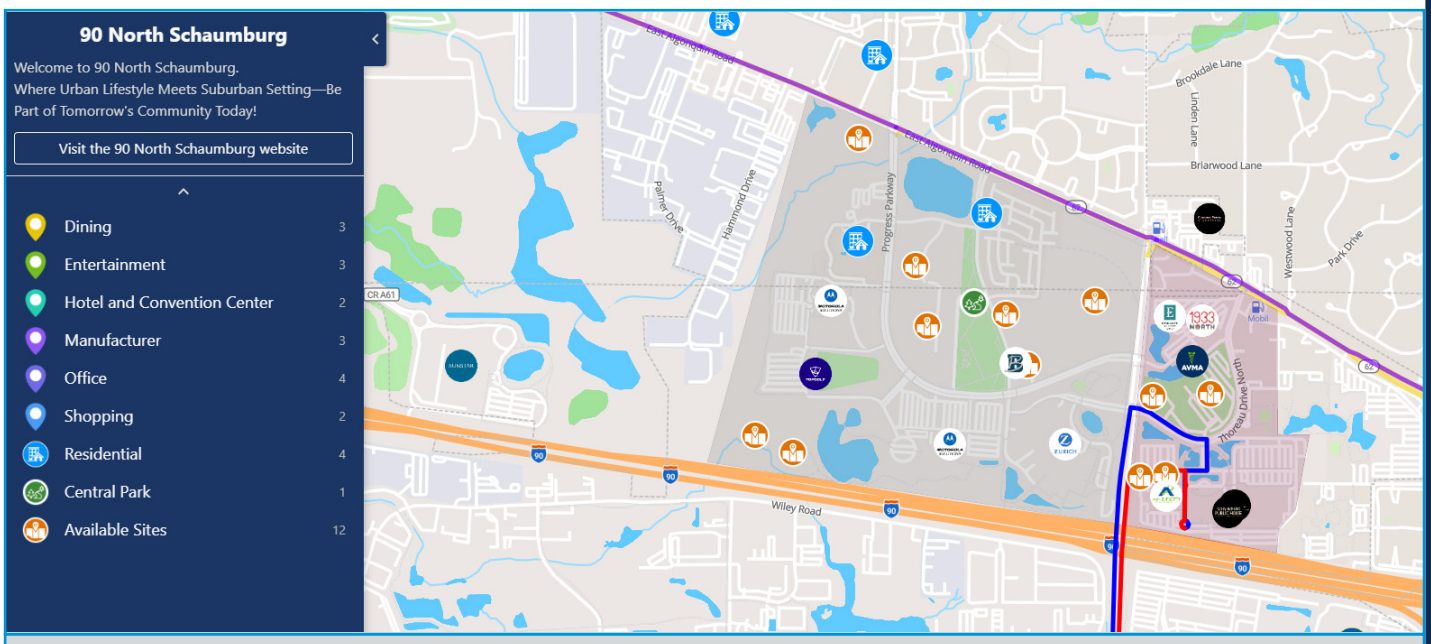

90 North TIF District Map with key features identified.

PROJECT APPROACH

The North Schaumburg TIF District is entering a pivotal phase of coordinated capital delivery and private development. To sustain momentum and protect the Village's investment, Schaumburg needs a program manager who provides stability, continuity, and disciplined oversight, someone who integrates interdependent projects, aligns consultants, and delivers clear, decision ready information to leadership. **Michael Baker offers exactly that: a management focused team that already understands the Village's systems, priorities, and stakeholders, now formalized under a structured program approach tailored to Schaumburg's needs**. The following project approach describes how we will deliver program level leadership, transparent controls, and seamless coordination across the entire TIF portfolio while operating as an extension of Village staff.

FIRM DESCRIPTION AND MUNICIPAL PROGRAM EMPHASIS

Michael Baker is a municipal focused program and project management partner. Our Chicago team manages multi-year local agency capital programs and complex, development adjacent infrastructure, emphasizing owner's representative services, consultant orchestration, and transparent reporting tailored for municipal decision making. For Schaumburg, we will lead the North TIF as an integrated program, coordinating Village needs and development projects while managing Village hired consultants and reporting directly to the Engineering Division Manager.

DEDICATED TEAM AND TRUE CONTINUITY OF SERVICE

Continuity in the Project Manager role is the Village's highest priority, and our staffing model delivers it. Dave Lawry will serve as Program Manager, offering senior oversight, executive liaison support, and risk escalation. Upon award, Scott Shirley will serve full-time as the Village's TIF Project Manager, providing daily leadership, coordination, and rapid responsiveness. Jeffrey Maczko will provide surge project management capacity when workload increases or when added municipal interface is needed. This preserves institutional knowledge and eliminates learning curves, while adding the depth, stability, and multidisciplinary support of Michael Baker's Chicago office. We will maintain an onsite presence within EPW, be available as needed, and manage hours consistent with the Village's expectations for the role, including the onsite work area and the 40-hour weekly upper limit without the Engineering Division Manager's consent.

Additionally, Dave has maintained relationships with three past TIF PMs including Joe Evers, Scott Kasper and Fred Mullard. While not members of the team, each has committed to respond to periodic questions for added continuity and to ensure final project closeouts.

MANAGEMENT PHILOSOPHY: OPERATING AS AN EXTENSION OF STAFF

Village staff are delivering a broad CIP; our responsibility is to reduce their coordination burden. We will function as the Village's owner's representative, integrating schedules, budgets, risks, and interdependencies across all TIF projects and private developments. Our cadence includes weekly working sessions to drive tasks, budgets, and schedule commitments; monthly executive reviews to confirm priorities and surface risks; and standing coordination with design teams, construction managers, developers, utilities, and permitting agencies. Communications will follow a defined workflow so decisions are made once, clearly documented, and tracked to completion.

COMMUNICATION WORKFLOW

All communications center on a single point of accountability, the TIF Project Manager, who routes information among Village leadership, EPW/Engineering, other departments, consultants, and developers. Inputs (field issues, submittals, schedule updates, budget changes) flow to the PM, are assessed for scope/schedule/cost impacts, and are summarized into decision-ready options for the Engineering Division Manager. Outputs (decisions, directives, action items) are logged, assigned, and time-boxed, with status reported at weekly work sessions and monthly executive reviews. Meeting minutes and an Outstanding Action Item Log will be issued after progress meetings to maintain a single source of truth.

PROGRAM CONTROLS, REPORTING, AND TRANSPARENCY

From mobilization, we will implement a scheduling matrix that maps interdependencies across the portfolio and reports out information to the Village's CIP dashboard and CIP Monthly Project Status Update format. This framework surfaces scope changes, schedule pressures, and cost trends early, and it standardizes reporting so leadership receives consistent, comparable information each month. We will manage the TIF CIP budget, including construction, professional services, and other expenses, and submit a monthly budget status report. Required meeting documentation (agenda, minutes, action logs) will be issued after each progress meeting to sustain predictability and accountability across teams.

QUALITY MANAGEMENT FOR SUBCONSULTANTS AND ENGINEERS

Michael Baker will prepare scopes and procurement documents, conduct technical evaluations, and provide award recommendations. Throughout this effort, **Michael Baker will apply a defined quality management (QM) process to all Village-hired consultants:**

- **Plan:** Confirm scope, deliverable standards, and review milestones at kickoff
- **Review:** Perform structured reviews for completeness,

code/standard conformance, and coordination with adjacent work
- **Resolve:** Issue consolidated comments, track reconciliation, and verify corrections at the next submittal
- **Validate:** Check readiness for procurement or construction and alignment with TIF budget and schedule.

This QM loop is embedded in our meeting cadence and deliverable tracker and is reinforced during preconstruction meetings and construction phase oversight. We will oversee design phase and construction phase PM responsibilities, including preconstruction meetings, public facing communications requirements, construction coordination, and documentation quality control.

BUDGET AND SCHEDULE ISSUE MANAGEMENT (EARLY WARNING → MITIGATION → DECISION)

Our Project Managers and Program Manager will review and validate cost estimates for future project budget requests and fiscal planning. **When a variance is detected, we will:**

- **Flag Early:** Record the issue in the risk register with quantified cost/schedule exposure
- **Stabilize:** Direct immediate containment steps (scope clarification, design adjustment, staging change, utility coordination)
- **Develop Options:** Provide the Engineering Division Manager with two to three decision alternatives including budget and schedule impacts
- **Decide and Communicate:** Document the selected path, update the matrix, and push directives through the action log
- **Monitor:** Track residual risk until closed

This is the same discipline we will use for change management (review, written recommendation, and, if directed, negotiation of change orders for Village approval) and payment reviews, both progress and final. We will coordinate final inspections for substantial completion and lead lessons learned meetings with documented summaries.

STAKEHOLDER ENGAGEMENT AND PUBLIC INTERFACE

Public meetings are typically led by Village staff; however, developer and inter-agency coordination often requires focused facilitation. We will plan and run stakeholder sessions with developers, utilities, and permitting agencies, ensuring agendas are outcome-oriented and decisions are recorded in the action log. We will also integrate private development timelines into the program matrix, so frontage expectations, access, and streetscape obligations align with Village priorities and construction windows.

MANAGING CROSS PROJECT INTERDEPENDENCIES

The North TIF is an ecosystem of linked efforts, pedestrian, roadway, utilities, park, and development interfaces. We will explicitly map and manage those linkages: e.g., land acquisition and grant programming for the 90 North Pedestrian Bridge; ROW/easement, federal compliance reviews, and staging for Hammond and Algonquin; multimodal access continuity for North Meacham Corridor – Stage II; utility relocations, signalization, drainage, and operations for the Thoreau Drive Realignment; and sequencing of Walden Subdivision Water and Sanitary improvements with roadway work to avoid rework and service interruptions. The matrix will make these dependencies visible, so risks are resolved before they affect cost or schedule.

AVAILABILITY, PROXIMITY, AND RESPONSIVENESS

Key team members live adjacent to Schaumburg and can be onsite at short notice for unscheduled meetings, developer issues, utility conflicts, or field conditions. We will use the onsite EPW work area, align availability with the Village's "as needed" expectation, and scale hours during high activity periods only with the Engineering Division Manager's consent. This model mirrors the responsiveness of internal staff and sustains the personalized attention the Village expects.

IN-HOUSE TECHNICAL BENCH–ANCILLARY, ON-CALL SUPPORT

Technical specialties are ancillary and engaged only as needed to keep projects moving. When design or construction questions arise, our Chicago-based specialists, roadway design, construction management, drainage and stormwater design, traffic and traffic signal design, street lighting, structural review, and certified planning, are available for rapid consultation. This allows the TIF Project Manager to validate consultant submittals quickly and maintain schedule momentum without separate procurements or delays.

COMPLIANCE AND INDEPENDENCE

To preserve independence and avoid conflicts, the TIF Project Manager engaged by the Village will not submit a proposal or enter into an agreement for services on any project located within the TIF District during the engagement. We will fully comply while coordinating, overseeing, and holding Village-hired consultants accountable to scope, schedule, budget, and quality requirements.

MOBILIZATION AND SEAMLESS TRANSITION

Because the Village is retaining the same trusted leaders it knows today, mobilization is swift: within days, we will confirm protocols, finalize onsite logistics, assimilate current files/budgets/schedules, and publish an initial integrated schedule with near-term milestones and critical path items. There is no onboarding delay, no relearning of history, and no disruption to active work, only an immediate extension of staff supported by disciplined program controls.

VALUE TO THE VILLAGE

This approach restores the continuity, structure, and high touch attention that the Village values most, while providing the transparency and accountability expected of a best practice municipal program. The result is fewer surprises, faster decisions, and a predictable cadence that keeps the North Schaumburg TIF program aligned with your objectives throughout the engagement.

STATEMENT OF AVAILABILITY

CAPACITY AND CAPABILITY TO PERFORM THE OUTLINED SCOPE IN A TIMELY MANNER

Michael Baker affirms that our proposed team has the time, capacity, and resources required to fully support the Village of Schaumburg throughout this engagement. **Upon award, Scott Shirley will join Michael Baker full-time and will serve as the Village's dedicated, on-site TIF Project Manager, with no competing assignments.** This will allow consistent daily presence, immediate responsiveness, and a project manager whose full professional focus is the North Schaumburg TIF program.

To provide structured leadership and continuity, Dave Lawry will serve as Program Manager, assumed at approximately 25% of his time (10 hours per week). Dave will oversee program controls, risk identification, cross-department coordination, and executive-level guidance. This planned allocation ensures the Village receives consistent senior direction while maintaining flexibility to increase involvement during periods of heightened activity. **Dave is available up to 100% of his time to devote to the Village if desired as he also has no other competing assignments.**

Jeffrey Maczko will supplement Scott's efforts as schedules demand or project needs expand, providing the Village with dependable surge capacity during overlapping construction, consultant procurement cycles, or accelerated development coordination. All three individuals reside adjacent to Schaumburg and can be on site within minutes, meeting the Village's requirements for short-notice availability and rapid response.

Beyond these core staff, Michael Baker's Chicago-based multidisciplinary bench remains available on an as-needed basis to support schedule-critical technical issues. These resources allow us to validate consultant deliverables quickly and resolve technical questions without delay or new procurement. Our internal workload planning has already reserved the necessary capacity to support this engagement, ensuring the Village receives dependable and uninterrupted coverage from award through completion.

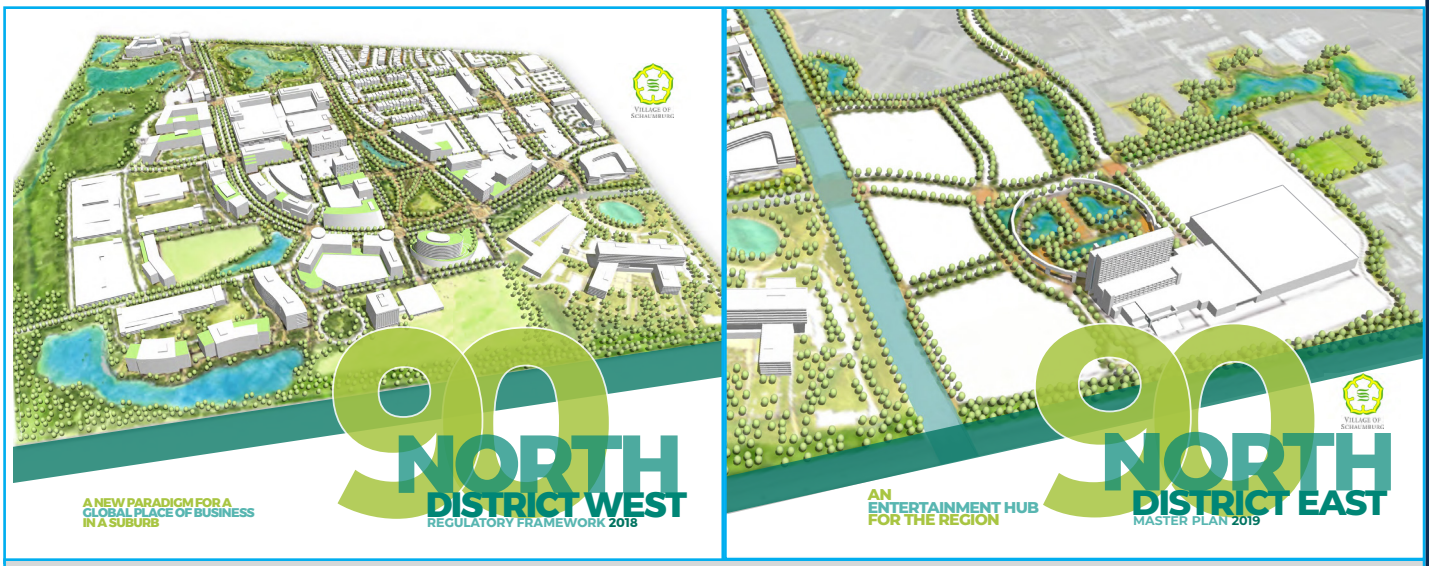

90 North District east and west concept renderings.

PROJECT REFERENCES

The Village can have full confidence in our ability to manage and deliver the North Schaumburg TIF Program, supported by project experience that stands unrivaled in scope and relevance. Our team has repeatedly delivered complex municipal, transportation, and infrastructure programs for communities across the region, demonstrating the same qualities Schaumburg identifies as essential: strong program leadership, schedule discipline, budget stewardship, responsiveness, and seamless coordination across departments and agencies.

Our references highlight more than technical expertise; they illustrate a proven record of solving the exact challenges the Village faces today. From multi-year capital improvement programs to high-impact roadway and utility upgrades, our work has consistently shown that we understand how municipalities operate. Each project demonstrates how we have delivered measurable improvements, strengthened community infrastructure, and supported municipal staff as a true extension of their team.

PROJECT NAME/ CLIENT	**Engineering & Public Works Support Services** Village of Schaumburg, Illinois
SCOPE OF WORK	Providing the Village of Schaumburg with comprehensive supplemental engineering and project management support to stabilize operations and maintain continuity across the EPW, Community Development, and Transportation Departments since 2021. Responsibilities include managing capital improvement projects, providing utility permit review, supporting construction oversight, and delivering technical expertise needed to sustain a growing and increasingly complex Capital Improvement Program. As part of this engagement, staff serve in key operational roles, including interim leadership within the Engineering Division, ensuring uninterrupted oversight of design, permitting, and project delivery functions. Staff has managed a wide range of Village infrastructure initiatives, such as roadway resurfacing programs, storm sewer and drainage upgrades, sanitary sewer basin rehabilitation under MWRD mandates, and multi use path and bicycle facility improvements–helping the Village advance high priority CIP projects.
PROJECT TEAM	Dave Lawry, PE / Scott Shirley, PE
PROJECT REFERENCE CONTACT INFORMATION	Brent McQueen, Engineering Manager 847-923-6628; bmcqueen@schaumburg.com

PROJECT NAME/ CLIENT	**90 North TIF District Support Services** Village of Schaumburg, Illinois
SCOPE OF WORK	Since 2019, providing comprehensive project and program management services for the Village of Schaumburg's 90 North TIF District, one of the Village's largest and most active redevelopment areas. The role includes overseeing the implementation of the TIF Capital Improvement Plan (CIP) and supporting the planning and programming of future infrastructure projects. Responsibilities include managing day-to-day project delivery, coordinating with Village leadership, staff, regulatory agencies, and private developers, and representing the Village's interests across all TIF initiatives. The work also supports strategic redevelopment goals, promotes inter-agency coordination, and ensures projects align with the Village's long-term vision for 90 North. Additional duties include construction oversight and field inspection for major capital projects such as the Meacham/Algonquin Road intersection improvements, 90 North Park (Phases 1–3), irrigation systems, the Shared Street Project, Thoreau Drive realignment, Meacham Road streetscape improvements, and the Walden Subdivision water and sanitary study. This work supports contractor coordination, project documentation, and quality assurance. The scope also includes utility coordination and development review, ensuring private development within the TIF complies with Village standards. This flexible, scalable service model provides the Village with consistent technical leadership and continuity throughout the TIF's redevelopment lifecycle.
PROJECT TEAM	Dave Lawry, PE / Scott Shirley, PE
PROJECT REFERENCE CONTACT INFORMATION	Brent McQueen, Engineering Manager 847-923-6628; bmcqueen@schaumburg.com

PROJECT NAME/ CLIENT	**Walnut Lane STP Resurfacing Improvements and Multi-Use Path, Phase I/ II** Village of Schaumburg, Illinois
SCOPE OF WORK	This project includes a concurrent Phase I and Phase II engineering designs for the resurfacing of Walnut Lane from Schaumburg Road to Bode Road in the Village of Schaumburg. Improvements included resurfacing, pavement patching, the addition of an off-road concrete multi-use path, ADA improvements, signage, and pavement striping improvements in a residential corridor. Michael Baker is conducting topographic survey, geotechnical investigation, preliminary site assessment, wetland assessments, utility coordination, traffic analysis, crash analysis, public information meetings, and completion of a Project Development Report to obtain Phase I approval from IDOT District 1. Phase II engineering includes preparation of geometric plans, project specifications, construction estimates, and coordination with outside agencies including IDOT District 1 BLRS, Cook County, and utility companies. Funding for the design engineering of this project is with local Village funds.
PROJECT TEAM	Scott Rodseth, PE / Jeffrey Maczko, PE / Adam Woods, PE / Joseph Hunn, PE
PROJECT REFERENCE CONTACT INFORMATION	Brent McQueen, Engineering Manager 847-923-6628; bmcqueen@schaumburg.com

PROJECT NAME/ CLIENT	**2018-2025 Annual Street Program** Village of Schaumburg, Illinois
SCOPE OF WORK	Provided Phase II design and Phase III construction engineering services for the Village's annual Street program since 2018. The program provides capital improvements and preventative maintenance to 210 miles of industrial and residential streets, parking lots, airport pavements, bike paths, and enhanced pedestrian crosswalks. In addition to the street improvements, the program has included over 20,000 feet of water main and storm sewer improvements, requiring coordination between separate water main and pavement contractors. Scope includes construction layout, observation, documentation, and closeout for all improvements, as well as planning, survey, design, and bid document preparation for the following year. Our designs utilize various pavement rehabilitation treatments, including preventative rejuvenators, traditional mill and overlay, structural overlays, and modified and full reconstructions of the roadways. The scope also includes robust community outreach management, including residential mailings and daily responses to Customer Service Requests. During 2022, the project completed 5.46 miles of street improvements, 23.7 miles of preventative surface treatments, and 9,674 feet of water main replacement. The original construction contract value was $8,734,124. The final construction cost was $7,977,093, 9% less than the awarded contract price. The Annual Street Program is funded locally.
PROJECT TEAM	Dave Lawry, PE
PROJECT REFERENCE CONTACT INFORMATION	Brent McQueen, Engineering Manager 847-923-6628; bmcqueen@schaumburg.com

PROJECT NAME/ CLIENT	**Mohawk Terrace Subdivision Redevelopment** Village of Bensenville Public Works
SCOPE OF WORK	In addition to overseeing the Village of Bensenville's Annual Capital Improvement Program prior to joining Michael Baker, Jeffrey was responsible for Private Development engineering review and stormwater certification for the Village. One of the major redefining projects for the Village included a 60+ acre redevelopment which razed nearly 100 homes to build four large buildings totaling 1.2 million square feet. Unique aspects included vacating Village rights-of-way and easements, evaluating the Village water system to provide domestic water supply, 13+ acre feet of stormwater storage in underground detention vaults, relocations of Village utilities, and coordination with IDOT and Cook County for highway permits. Additionally, Jeff oversaw erosion and sediment control inspections, provided help with IEPA water and sanitary permits, and took part in weekly progress meetings to maintain project schedule with the developers, their engineers, and the various contractors. This development was funded entirely by the Developer at a construction cost of over $18M, not including the buildings themselves.
PROJECT TEAM	Jeffrey Maczko, PE
PROJECT REFERENCE CONTACT INFORMATION	Mr. Kurtis Pozsgay, AICP, Director of Community & Economic Development 630-350-3396; kpozsgay@bensenville.il.us

PROJECT COSTS

The following Cost Proposal outlines our recommended staffing structure, proposed hourly rates, and optional support staff classifications to successfully manage and advance the North Schaumburg TIF Program. Our approach is tailored to provide the Village with flexible, scalable, and cost-efficient support that aligns with the scope of services and the anticipated project needs. While this proposal is intended to focus on costs associated with the listed projects, Program Manager efforts and cost may span all projects currently underway and included in the 5-year CIP, and past projects still requiring closeout efforts including the Meacham/Algonquin Intersection improvement and the Meacham Streetscape Stage I.

This section details the dedicated Program Manager and Project Manager roles, the availability of additional management support as needed, and the suite of technical, construction, and administrative resources that can be deployed to meet project-specific demands. It also includes our anticipated effort across the individual projects included in the TIF Capital Improvement Program, ensuring clear visibility into the staffing levels, responsibilities, and cost expectations required to deliver consistent, high-quality program management for the Village.

These rates includes any vehicle use expenses and we will bill the Village monthly for services rendered. We commit to these rates for May 1, 2026 to April 30, 2027 to remain in alignment with the Village's fiscal year and contract period for this work.

PRIMARY LEADERSHIP TEAM

Program Manager – Dave Lawry, PE, MPA | $206/hr
Responsible for executive-level oversight of the TIF program, coordination with Village leadership, strategic planning, and highlevel issue resolution.

TIF Project Manager – Scott Shirley, PE | $202/hr
Serves as daily point of contact and primary manager for TIF CIP execution, schedules, budgets, consultant coordination, and reporting.

Alternate Project Manager – Jeffrey Maczko, PE, CFM | $202/hr
Provides project management support as needed, including leading subprojects, representing the Village in meetings, and backfilling PM duties during periods of peak workload or absence.

The anticipated labor effort and program costs are estimated on the following page.

SUPPORT PERSONNEL – AS REQUIRED

To complement our program management team, we have assembled a flexible bench of technical, engineering, and administrative support personnel whose services can be deployed as project needs evolve. These professionals provide targeted expertise in areas such as design review, construction oversight, utility coordination, CADD/GIS support, and project administration, ensuring that the Village receives the right level of support at the right time. The following proposed rates for support personnel reflect the range of skills and disciplines available to supplement the TIF management team and maintain continuity and efficiency across all assigned projects.

▪ **Civil Associate**	$115 to $125/hour
▪ **Civil Engineer I / II**	$140 to $175/hour
▪ **Construction Inspector / Resident Engineer**	$135 to $175/hour
▪ **Traffic/Transportation Engineer**	$140 to $175/hour
▪ **CADD Designer / Technician**	$135 to $165/hour
▪ **GIS Technician**	$145 to $175/hour

The specific need, scope, and utilization of any support personnel will be coordinated in advance with, and subject to approval by, the Village's Engineering Division Manager to ensure alignment with project priorities and budget expectations. No support staff will be engaged without prior Village authorization and resumes and qualifications for proposed personnel can be provided at any time at the Village's request to confirm technical fit, experience, and availability.

PROPOSED HOURLY RATES

VILLAGE OF SCHAUMBURG - ASSUMED LABOR SCHEDULE FOR TIF MANAGEMENT SERVICES FY26/27 (Hrs/Month)															
		2026								2027					
PROJECT DESCRIPTION	**PROPOSED MANAGER**	**MAY**	**JUN**	**JUL**	**AUG**	**SEP**	**OCT**	**NOV**	**DEC**	**JAN**	**FEB**	**MAR**	**APR**	**TOTAL HOURS**	**HOURLY RATE**	**COST**
Program Management	David Lawry	**60**	**60**	**60**	**60**	**60**	**60**	**60**	**60**	**60**	**60**	**60**	**60**	720	$206	$148,320
90N Park Stage II - Construction Engineering	Scott Shirley	**30**	**20**	**20**	**4**	**4**	**4**	**4**	**4**	**0**	**0**	**0**	**0**	90	$202	$18,180
90N Park Stage III - Design Engineering	Scott Shirley	**10**	**10**	**10**	**10**	**20**	**20**	**20**	**20**	**20**	**24**	**24**	**24**	212	$202	$42,824
90N Pedestrian Bridge - Design Engineering	Scott Shirley	**10**	**10**	**10**	**10**	**10**	**20**	**20**	**20**	**20**	**20**	**30**	**30**	210	$202	$42,420
Hammond and Algonquin Intersection Improvements - Construction Engineering	Scott Shirley	**10**	**10**	**10**	**20**	**20**	**20**	**20**	**20**	**20**	**20**	**20**	**20**	210	$202	$42,420
North Meacham Road Streetscape Stage II - Design Engineering	Scott Shirley	**10**	**10**	**10**	**10**	**10**	**10**	**20**	**20**	**20**	**10**	**10**	**10**	150	$202	$30,300
90 North District Roadway Re-Alignment Thoreau Drive - Design Engineering	Scott Shirley	**4**	**10**	**10**	**20**	**20**	**20**	**20**	**20**	**40**	**40**	**20**	**20**	244	$202	$49,288
Walden Subdivision Water and Sanitary Study - Design Engineering	Scott Shirley	**10**	**10**	**20**	**20**	**20**	**40**	**40**	**20**	**30**	**30**	**20**	**20**	280	$202	$56,560
Meacham/Algonquin Intersection Improvement	Scott Shirley	**4**	**4**	**4**	**4**	**4**	**4**	**0**	**0**	**0**	**0**	**0**	**0**	24	$202	$4,848
Meacham Streetscape Stage I	Scott Shirley	**20**	**20**	**10**	**4**	**4**	**4**	**0**	**0**	**0**	**0**	**0**	**0**	62	$202	$12,524
	TOTAL	148	144	154	158	168	198	204	184	210	204	184	184	2202		$447,684

We look forward to meeting with Village staff upon selection to confirm that our staffing allocations, availability assumptions, and anticipated level of effort align precisely with the Village's needs and preferences. Our team is fully prepared to adjust involvement to match the Village's expectations for service levels, presence, and responsiveness.

RESOLUTION NO. R-26-____

A RESOLUTION AUTHORIZING THE VILLAGE MANAGER AND VILLAGE CLERK TO EXECUTE AN AGREEMENT FOR 90 NORTH TIF MANAGEMENT SERVICES WITH MICHAEL BAKER INTERNATIONAL

WHEREAS, the President and Board of Trustees wish to execute an agreement with Michael Baker International. of Chicago, IL for the 90 North TIF Management Services; and

WHEREAS, it would be in the best interests of the citizens of Schaumburg to execute the attached Agreement, Exhibit "A".

NOW, THEREFORE, BE IT RESOLVED BY THE PRESIDENT AND BOARD OF TRUSTEES OF THE VILLAGE OF SCHAUMBURG:

SECTION ONE: That the Village Manager and Village Clerk be and hereby are authorized and directed to execute the attached Agreement, Exhibit "A", between the Village of Schaumburg and Michael Baker International. of Chicago, IL**.**

SECTION TWO: That the Village Manager and Village Clerk be and hereby are authorized to sign any documents in furtherance of this Resolution.

SECTION THREE: That this Resolution shall be in full force and effect after passage and approval as required by law.

AYES:

NAYS:

ABSENT:

PASSED AND APPROVED this _____ day of _____, 2026.

_____
Village President

ATTEST:

_____
Village Clerk

VILLAGE OF SCHAUMBURG
PROFESSIONAL SERVICES AGREEMENT FOR
90 North TIF Management Services

THIS AGREEMENT is dated as of the ____ day of _____, 20__ (***"Agreement"***) and is by and between the **VILLAGE OF SCHAUMBURG**, an Illinois municipal corporation (***"Village"***) and the Consultant identified in Subsection 1A below.

IN CONSIDERATION OF the recitals and the mutual covenants and agreements set forth in the Agreement, and pursuant to the Village's statutory powers, the parties agree as follows:

SECTION 1. CONSULTANT.

A. Engagement of Consultant. The Village desires to engage the Consultant identified below to provide all necessary professional consulting services and to perform the work in connection with the project identified below:

Consultant Firm Name: Michael Baker International
Street Address: 200 W Adams Street
City, State, Zip: Chicago, IL, 60606
Telephone: 847-417-4180
Email: david.lawry@mbakerintl.com

B. Project Description.
TIF Project Management Services for the Village of Schaumburg North TIF District. Detailed Scope of Services included in the Request for Proposals for the TIF Manager, a copy of which is attached as Exhibit RFP to this Agreement.

C. Representations of Consultant. The Consultant has submitted to the Village a description of the services to be provided by the Consultant, a copy of which is attached as Exhibit 1 to this Agreement (***"Services"***). The Consultant represents that it is financially solvent, has the necessary financial resources, and is sufficiently experienced and competent to perform and complete the professional consulting services set forth in Exhibit 1 in a manner consistent with the standards of professional practice by recognized consulting firms providing services of a similar nature.

D. Agreement Amount. The total amount billed by the Consultant for the Services under this Agreement shall not exceed $447,684.00, as outlined in Exhibit 1, including reimbursable expenses as identified in Exhibit 1, unless amended pursuant to Subsection 8A of this Agreement.

SECTION 2. SCOPE OF SERVICES.

A. Retention of the Consultant. The Village retains the Consultant to perform, and the Consultant agrees to perform, the Services.

B. Services. The Consultant shall provide the Services pursuant to the terms and conditions of this Agreement.

C. Commencement; Time of Performance. The Consultant shall commence the Services immediately upon receipt of written notice from the Village that this Agreement has been fully executed by the Parties or on the date specified in Exhibit 1 (the ***"Commencement Date"***). The Consultant shall diligently and continuously prosecute the Services until the completion of the Services, but in no event later than 365 days after the date of the execution of this Agreement (***"Time of Performance"***).

D. Reporting. The Consultant shall regularly report to the Village, regarding the progress of the Services during the term of this Agreement.

SECTION 3. COMPENSATION AND METHOD OF PAYMENT.

A. Agreement Amount. The total amount billed for the Proposal during the term of this Agreement shall not exceed the amount identified as the Agreement Amount in Subsection 1D of this Agreement, without the prior express written authorization of the Village.

B. Invoices and Payment. The Consultant shall be paid as provided in Exhibit 1. The Consultant shall submit invoices to the Village in an approved format for those portions of the Services performed and completed by the Consultant. The amount billed in any such invoice shall be based on the method of payment set forth in Exhibit 1. The Village shall pay to the Consultant the amount billed within 30 days after its receipt and approval of such an invoice.

C. Records. The Consultant shall maintain records showing actual time devoted and costs incurred, and shall permit the authorized representative of the Village to inspect and audit all data and records of the Consultant for work done under the Agreement. The records shall be made available to the Village at reasonable times during the Agreement period, and for three years after the termination of the Agreement.

D. Claim In Addition To Agreement Amount. If the Consultant wishes to make a claim for additional compensation as a result of action taken by the Village, the Consultant shall provide written notice to the Village of such claim within 7 days after occurrence of such action as provided by Subsection 8D of this Agreement, and no claim for additional compensation shall be valid unless made in accordance with this Subsection. Any changes in the Agreement Amount shall be valid only upon written amendment pursuant to Subsection 8A of this Agreement. Regardless of the decision of the Village relative to a claim submitted by the Consultant, the Consultant shall proceed with all of the Services required to complete the Services under this Agreement as determined by the Village without interruption.

E. Taxes, Benefits and Royalties. The Agreement Amount includes all applicable federal, state, and local taxes of every kind and nature applicable to the Services as well as all taxes, contributions, and premiums for unemployment insurance, old age or retirement benefits, pensions, annuities, or similar benefits and all costs, royalties and fees arising from the use on, or the incorporation into, the Services, of patented or copyrighted equipment, materials, supplies, tools, appliances, devices, processes, or inventions. All claim or right to claim additional compensation by reason of the payment of any such tax, contribution, premium, costs, royalties, or fees is hereby waived and released by Consultant.

F. Final Acceptance. The Services, or, if the Services are to be performed in separate phases, each phase of the Services, shall be considered complete on the date of final written acceptance by the Village of the Services or each phase of the Services, as the case may be, which acceptance shall not be unreasonably withheld or delayed.

SECTION 4. PERSONNEL; SUBCONTRACTORS.

A. Key Project Personnel. The Key Project Personnel identified in Exhibit 1 shall be primarily responsible for carrying out the Services on behalf of the Consultant. The Key Project Personnel shall not be changed without the Village's prior written approval.

B. Availability of Personnel. The Consultant shall provide all personnel necessary to complete the Services including, without limitation, any Key Project Personnel identified in this Agreement. The Consultant shall notify the Village as soon as practicable prior to terminating the employment of, reassigning, or receiving notice of the resignation of, any Key Project Personnel. The Consultant shall have no claim for damages and shall not bill the Village for additional time and materials charges as the result of any portion of the Services which must be duplicated or redone due to such termination or for any delay or extension of the Time of Performance as a result of any such termination, reassigning, or resignation.

C. Approval and Use of Subcontractors. The Consultant shall perform the Services with its own personnel and under the management, supervision, and control of its own organization unless otherwise approved by the Village in writing. All subcontractors and subcontracts used by the Consultant shall be acceptable to, and approved in advance by, the Village. The Village's approval of any subcontractor or subcontract shall not relieve the Consultant of full responsibility and liability for the provision, performance, and completion of the Services as required by the Agreement. All Services performed under any subcontract shall be subject to all of the provisions of this Agreement in the same manner as if performed by employees of the Consultant. For purposes of this Agreement, the term "Consultant" shall be deemed also to refer to all subcontractors of the Consultant, and every subcontract shall include a provision binding the subcontractor to all provisions of this Agreement.

D. Removal of Personnel and Subcontractors. If any personnel or subcontractor fails to perform the Services in a manner satisfactory to the Village, the Consultant shall immediately upon notice from the Village remove and replace such personnel or subcontractor. The Consultant shall have no claim for damages, for compensation in excess of the amount contained in this Agreement or for a delay or extension of the Time of Performance as a result of any such removal or replacement.

SECTION 5. CONFIDENTIAL INFORMATION.

A. Confidential Information. The term ***"Confidential Information"*** shall mean information designated as "Confidential" in the possession or under the control of the Village relating to the technical, business or corporate affairs of the Village; Village property; user information, including, without limitation, any information pertaining to usage of the Village's computer system, including and without limitation, any information obtained from server logs or other records of electronic or machine readable form; and the existence of, and terms and conditions of, this Agreement. Village Confidential Information shall not include information that can be demonstrated: (i) to have been rightfully in the possession of the Consultant from a source other than the Village prior to the time of disclosure of said information to the Consultant under this Agreement (***"Time of Disclosure"***); (ii) to have been in the public domain prior to the Time of Disclosure; (iii) to have become part of the public domain after the Time of Disclosure by a publication or by any other means except an unauthorized act or omission or breach of this Agreement on the part of the Consultant or the Village; or (iv) to have been supplied to the Consultant after the Time of Disclosure without restriction by a third party who is under no obligation to the Village to maintain such information in confidence.

B. No Disclosure of Confidential Information by the Consultant. The Consultant acknowledges that it shall, in performing the Services for the Village under this Agreement, have access to or be directly or indirectly exposed to Confidential Information. The Consultant shall hold confidential all Confidential Information and shall not disclose or use such Confidential Information without express prior written consent of the Village unless required to perform the Services set forth in this Agreement. The Consultant shall be permitted to disclose Confidential Information as necessary to its subcontractors to fulfill the obligations required by this Agreement. The Consultant shall use reasonable measures at least as strict as those the Consultant uses to protect its own confidential information. Such measures shall include, without limitation, requiring subcontractors of the Consultant to execute a non-disclosure agreement before obtaining access to Confidential Information.

SECTION 6. STANDARD OF CARE; INDEMNIFICATION; INSURANCE.

A. Standard of Care. The Consultant warrants that the Services shall be performed in accordance with the standards of professional practice, care, and diligence practiced by recognized consulting firms in performing services of a similar nature in the same locale in existence at the time of performance of this Agreement. The standard of care expressed shall be in addition to any other representations expressed in the Agreement, or expressed or implied by law, which are hereby reserved unto the Village.

B. Indemnification. The Consultant shall, without regard to the availability or unavailability of any insurance either of the Village or the Consultant, indemnify and save harmless, the Village, its officials, and its employees, against any and all damages, liabilities, losses, and expenses, including reasonable attorneys' fees and administrative expenses recoverable under applicable law, to the extent arising, out of or caused by, the Consultant's negligent or wrongful acts or omissions in the performance of, or failure to perform, the Services or any part thereof, except to the extent caused by the negligence of the Village.

C. Insurance. Contemporaneous with the Consultant's execution of this Agreement, the Consultant shall provide certificates of insurance and upon request, policies of insurance, all with coverages and limits acceptable to the Village, and evidencing at least the minimum insurance coverages and limits as set forth in Exhibit 2 to this Agreement. But in no event shall any work begin without an insurance certificate or policy having been provided and approved by the Village. Such certificates shall be from companies with a general rating of A and a financial size category of Class X or better, in Best's Insurance Guide. Such certificates of insurance shall provide that no insurer change, modification in, or cancellation of any insurance shall become effective until the expiration of 30 days after written notice thereof shall have been given to the Village. The Consultant shall, at all times during the term of this Agreement, maintain and keep in force, at the Consultant's expense, the insurance coverages provided above, including without limitation at all times to meet the Standard of Care requirements of Subsection 6(A) of this section.

D. No Personal Liability. No elected or appointed official or employee of the Village shall be personally liable, in law or in contract, to the Consultant as the result of the execution of this Agreement. Likewise, no claims or suits shall be made against the employees of the Consultant as a result of the execution of this Agreement.

SECTION 7. CONSULTANT AGREEMENT GENERAL PROVISIONS.

A. Relationship of the Parties. The Consultant shall act as an independent contractor in providing and performing the Services. Nothing, in or done pursuant to this Agreement, shall be construed (i) to create the relationship of principal and agent, employer and employee, partners, or joint venturers between the Village and Consultant; or (ii) to create any relationship between the Village and any subcontractor of the Consultant.

B. Conflict of Interest. The Consultant represents and certifies that, to the best of its knowledge, (1) no Village employee or agent is interested in the business of the Consultant or this Agreement; (2) as of the date of this Agreement neither the Consultant nor any person employed or associated with the Consultant has any interest that would conflict in any manner or degree with the performance of the obligations under this Agreement; and (3) neither the Consultant nor any person employed by or associated with the Consultant shall at any time during the term of this Agreement obtain or acquire any interest that would conflict in any manner or degree with the performance of the obligations under this Agreement.

C. No Collusion. The Consultant represents and certifies that the Consultant is not barred from contracting with a unit of state or local government as a result of (i) a delinquency in the payment of any tax administered by the Illinois Department of Revenue unless the Consultant is contesting, in accordance with the procedures established by the appropriate revenue act, its liability for the tax or the amount of the tax, as set forth in Section 11-42.1-1 *et seq.* of the Illinois Municipal Code, 65 ILCS 5/11-42.1-1 *et seq.*; or (ii) a violation of either Section 33E-3 or Section 33E-4 of Article 33E of the Criminal Code, 720 ILCS 5/33E-1 *et seq.* The Consultant represents that the only persons, firms, or corporations interested in this Agreement as principals are those disclosed to the Village prior to the execution of this Agreement, and that this Agreement is made without collusion with any other person, firm, or corporation. If at any time it shall be found that the Consultant has, in procuring this Agreement, colluded with any other person, firm, or corporation, then the Consultant shall be liable to the Village for all loss or damage that the Village may suffer, and this Agreement shall, at the Village's option, be null and void.

D. Sexual Harassment Policy. The Consultant certifies that it has a written sexual harassment policy in full compliance with Section 2-105(A) (4) of the Illinois Human Rights Act, 775 ILCS 5/2-105(A) (4).

E. Patriot Act Compliance. The Consultant represents and warrants to the *Village* that neither it nor any of its principals, shareholders, members, partners, or affiliates, as applicable, is a person or entity named as a Specially Designated National and Blocked Person (as defined in Presidential Executive Order 13224) and that it is not acting, directly or indirectly, for or on behalf of a Specially Designated National and Blocked Person. The Consultant further represents and warrants to the Village that the Consultant and its principals, shareholders, members, partners, or affiliates, as applicable, are not, directly or indirectly, engaged in, and are not facilitating, the transactions contemplated by this Agreement on behalf of any person or entity named as a Specially Designated National and Blocked Person. The Consultant hereby agrees to defend, indemnify and hold harmless the Village, its corporate authorities, and all Village elected or appointed officials, officers, employees, agents, representatives, engineers, and attorneys, from and against any and all claims, damages, losses, risks, liabilities, and expenses (including reasonable attorneys' fees and costs) arising from or related to any breach of the representations and warranties in this subsection.

F. Termination. Notwithstanding any other provision hereof, the Village may terminate this Agreement at any time upon 15 days prior written notice to the Consultant. In the event that this Agreement is so terminated, the Consultant shall be paid for Services actually performed and reimbursable expenses actually incurred, if any, prior to termination, not exceeding the value of the Services completed as determined as provided in Exhibit 1. The Consultant may also terminate the Agreement in the event the Village fails to make payment for services rendered, but only after the Consultant has provided written notice to the Village of the lack of payment and allowed the Village 30 days to make payment or contest the payment or amount.

G. Term. The time of performance of this Agreement, unless terminated pursuant to the terms of this Agreement, shall expire on the date the Village determines that all of the Services under this Agreement are completed or upon final payment to Consultant. A determination of completion shall not constitute a waiver of any rights or claims which the Village may have or thereafter acquire with respect to any breach hereof by the Consultant or any right of indemnification of the Village by the Consultant.

H. Compliance with Laws and Grants. Consultant shall give all notices, pay all fees, and take all other action that may be necessary to ensure that the Services are provided, performed, and completed in accordance with all required governmental permits, licenses, or other approvals and authorizations that may be required in connection with providing, performing, and completing the Services, and with all applicable building and zoning statutes, ordinances, rules, and regulations, and the Fair Labor Standards Act; any statutes regarding qualification to do business; any statutes prohibiting discrimination because of, or requiring affirmative action based on, race, creed, color, national origin, age, sex, or other prohibited classification, including, without limitation, the Americans with Disabilities Act of 1990, 42 U.S.C. §§ 12101 *et seq.*, and the Illinois Human Rights Act, 775 ILCS 5/1-101 *et seq.* Consultant shall also comply with all conditions of any federal, state, or local grant received by Village and made known to the Consultant with respect to this Agreement or the Services.

Consultant shall be solely liable for any fines or civil penalties that are imposed by any governmental or quasi-governmental agency or body that may arise, or be alleged to have arisen, out of or in connection with Consultant's, or its subcontractors', performance of, or failure to perform, the Services or any part thereof.

I. Default. If it should appear at any time that the Consultant has failed or refused to prosecute, or has delayed in the prosecution of, the Services with diligence at a rate that permits completion of the Services in full compliance with the requirements of this Agreement, or has otherwise failed, refused, or delayed to perform or satisfy the Services or any other material requirement of this Agreement (***"Event of Default"***), and fails to cure any such Event of Default within ten business days after the Consultant's receipt of written notice of such Event of Default from the Village, then the Village shall have the right, without prejudice to any other remedies provided by law or equity, to pursue any one or more of the following remedies:

1. Cure by Consultant. The Village may require the Consultant, within a reasonable time, to complete or correct all or any part of the Services that are the subject of the Event of Default; and to take any or all other action necessary to bring the Consultant and the Services into compliance with this Agreement.

2. Termination of Agreement by Village. The Village may terminate this Agreement without liability for further payment of amounts due or to become due under this Agreement.

3. **Withholding of Payment by Village.** The Village may withhold from any payment, whether or not previously approved, or may recover from the Consultant, any and all costs, including attorneys' fees and administrative expenses, incurred by the Village as the result of any Event of Default by the Consultant or as a result of reasonable actions taken by the Village in response to any Event of Default by the Consultant.

J. No Additional Obligation. The Parties acknowledge and agree that the Village is under no obligation under this Agreement or otherwise to negotiate or enter into any other or additional contracts or agreements with the Consultant or with any vendor solicited or recommended by the Consultant.

K. Village Board Authority. Notwithstanding any provision of this Agreement, any negotiations or agreements with, or representations by the Consultant to vendors shall be subject to the approval of the Village Board of Trustees. The Village shall not be liable to any vendor or other third party for any agreements made by the Consultant, purportedly on behalf of the Village, without the knowledge and approval of the Village Trustees.

L. Mutual Cooperation. The Village agrees to cooperate with the Consultant in the performance of the Services, including meeting with the Consultant and providing the Consultant with such non-confidential information that the Village may have that may be relevant and helpful to the Consultant's performance of the Services. The Consultant agrees to cooperate with the Village in the performance of the Services to complete the work and with any other consultants engaged by the Village.

M. News Releases. The Consultant shall not issue any news releases or other public statements regarding the Services without prior approval from the Village

N. Ownership. Designs, drawings, plans, specifications, photos, reports, information, observations, calculations, notes, and any other documents, data, or information, in any form, prepared, collected, or received by the Consultant in connection with any or all of the Services to be performed under this Agreement (***"Documents"***) shall be and remain the exclusive property of the Village. At the Village's request, or upon termination of this Agreement, the Consultant shall cause the Documents to be promptly delivered to the Village upon payment of all sums due and owing Consultant under the Agreement. Any reuse of Documents other than for the purposes of this Agreement shall be at Village risk and Consultant shall not be liable for any reuse of the Documents.

O. GIS Data. ***[NOTE: Use this only if applicable]*** The Village has developed digital map information through Geographic Information Systems Technology (***"GIS Data"***) concerning the real property located within the Village. If requested to do so by the Consultant, the Village agrees to supply the Consultant with a digital copy of the GIS Data, subject to the following conditions:

1. **Limited Access to GIS Data.** The GIS Data provided by the Village shall be limited to the scope of the Services that the Consultant is to provide for the Village;

2. **Purpose of GIS Data.** The Consultant shall limit its use of the GIS Data to its intended purpose of furtherance of the Services; and

3. **Agreement with Respect to GIS Data.** The Consultant does hereby acknowledge and agree that:

a. **Trade Secrets of the Village.** The GIS Data constitutes proprietary materials and trade secrets of the Village and, shall remain the property of the Village;

b. **Consent of Village Required.** The Consultant will not provide or make available the GIS Data in any form to anyone without the prior written consent of the Village;

c. **Supply to Village.** At the request of the Village, the Consultant shall supply the Village with any and all information that may have been developed by the Consultant based on the GIS Data;

d. **No Guarantee of Accuracy.** The Village makes no guarantee as to the accuracy, completeness, or suitability of the GIS Data in regard to the Consultant's intended use thereof; and

e. **Discontinuation of Use.** At such time as the Services have been completed to the satisfaction of the Village, the Consultant shall cease its use of the GIS Data for any purpose whatsoever; and, upon request, an authorized representative of the Village shall be afforded sufficient access to the Consultant's premises and data processing equipment to verify that all use of the GIS Data has been discontinued.

SECTION 8. GENERAL PROVISIONS.

A. Amendment. No amendment or modification to this Agreement shall be effective unless and until such amendment or modification is in writing, properly approved in accordance with applicable procedures, and executed.

B. Assignment. This Agreement may not be assigned by the Village or by the Consultant without the prior written consent of the other party.

C. Binding Effect. The terms of this Agreement shall bind and inure to the benefit of the Parties hereto and their agents, successors, and assigns.

D. Notice. Any notice or communication required or permitted to be given under this Agreement shall be in writing and shall be delivered (i) personally, (ii) by a reputable overnight courier, (iii) by certified mail, return receipt requested, and deposited in the U.S. Mail, postage prepaid, (iv) by facsimile, or (v) by electronic internet mail ("e-mail"). Facsimile notices shall be deemed valid only to the extent that they are (a) actually received by the individual to whom addressed and (b) followed by delivery of actual notice in the manner described in either (i), (ii), or (iii) above within three business days thereafter at the appropriate address set forth below. E-mail notices shall be deemed valid and received by the addressee thereof when delivered by e-mail and (a) opened by the recipient on a business day at the address set forth below, and (b) followed by delivery of actual notice in the manner described in either (i), (ii) or (iii) above within three business days thereafter at the appropriate address set forth below. Unless otherwise expressly provided in this Agreement, notices shall be deemed received upon the earlier of (a) actual receipt; (b) one business day after deposit with an overnight courier as evidenced by a receipt of deposit; or (c) three business days following deposit in the U.S. mail, as evidenced by a return receipt. By notice complying with the requirements of this Subsection, each Party shall have the right to change the address or the addressee, or both, for all future notices and communications to such party, but no notice of a change of addressee or address shall be effective until actually received.

Notices and communications to the Village shall be addressed to, and delivered at, the following address:

Village of Schaumburg 714 S. Plum Grove Road
Schaumburg, Illinois 60193
Attention: Ogar Somo,P.E.,CFM
E-mail: osomo@schaumburg.com

Notices and communications to the Consultant shall be addressed to, and delivered at, the following address:

Consultant Firm Name: Michael Baker International
Street Address: 200 W Adams Street
City, State, Zip: Chicago, IL, 60606
Attention: David Lawry
Facsimile: _____
Email: david.lawry@mbakerintl.com

E. Third Party Beneficiary. No claim as a third party beneficiary under this Agreement by any person, firm, or corporation other than the Consultant shall be made or be valid against the Village.

F. Provisions Severable. If any term, covenant, condition, or provision of this Agreement is held by a court of competent jurisdiction to be invalid, void, or unenforceable, the remainder of the provisions shall remain in full force and effect and shall in no way be affected, impaired or invalidated.

G. Time. Time is of the essence in the performance of this Agreement.

H. Governing Laws. This Agreement shall be interpreted according to the laws of the State of Illinois.

I. Entire Agreement. This Agreement constitutes the entire agreement between the parties and supersedes any and all previous or contemporaneous oral or written agreements and negotiations between the Village and the Consultant with respect to the Proposal and the Services.

J. Waiver. No waiver of any provision of this Agreement shall be deemed to or constitute a waiver of any other provision of this Agreement (whether or not similar) nor shall any such waiver be deemed to or constitute a continuing waiver unless otherwise expressly provided in this Agreement.

K. Exhibit. Exhibits 1 and 2, are attached hereto, and by this reference incorporated in and made a part of this Agreement. In the event of a conflict between the Exhibit and the text of this Agreement, the text of this Agreement shall control.

L. Rights Cumulative. Unless expressly provided to the contrary in this Agreement, each and every one of the rights, remedies, and benefits provided by this Agreement shall be cumulative and shall not be exclusive of any other such rights, remedies, and benefits allowed by law.

M. Counterpart Execution. This Agreement may be executed in several counterparts, each of which, when executed, shall be deemed to be an original, but all of which together shall constitute one and the same instrument.

[SIGNATURES FOLLOW]

VILLAGE OF SCHAUMBURG

By: _____
Village Manager

ATTEST:

By: _____
Village Clerk

CONSULTANT

By: _____

TITLE: Vice President

ATTEST:

By: _____

TITLE: Project Manager

EXHIBIT 1

SCOPE OF SERVICES

AGREEMENT AMOUNT

[TO BE PREPARED BY CONSULTANT AND ACCEPTABLE TO VILLAGE]

[INCLUDE HOURLY RATES, LUMP SUM AMOUNTS, REIMBURSABLE COSTS, SCHEDULE FOR LUMP SUM OR INSTALLMENT PAYMENTS, INVOICE FORMAT, ETC.]

[SHALL INCLUDE SCHEDULE]

EXHIBIT 2

INSURANCE COVERAGES

A. Worker's Compensation and Employer's Liability with limits not less than:

(1) Worker's Compensation: Statutory;

(2) Employer's Liability:

$500,000 injury-per occurrence

$500,000 disease-per employee

$500,000 disease-policy limit

Such insurance shall evidence that coverage applies in the State of Illinois.

B. Comprehensive Motor Vehicle Liability with a combined single limit of liability for bodily injury and property damage of not less than $1,000,000 for vehicles owned, non-owned, borrowed or rented.

All employees shall be included as insureds.

C. Comprehensive General Liability with coverage written on an "occurrence" basis and with limits no less than:

$1,000,000 Bodily Injury and Property Damage $2,000,000 Aggregate

Coverages shall include:

- Broad Form Property Damage Endorsement
- Broad Form Contractual Liability (must expressly cover the indemnity provisions of the Contract)

D. Umbrella Policy or Excess liability Insurance with a limit of liability of not less than $2,000,000.

The required coverages may be in any combination of primary, excess, and umbrella policies. Any excess or umbrella policy must provide excess coverage over underlying insurance, except professional liability, on a following-form basis such that when any loss covered by the primary policy exceeds the limits under the primary policy, the excess or umbrella policy becomes effective to cover such loss.

E. Professional Liability Insurance. With a limit of liability of not less than $1,000,000 per claim/$2,000,000 in the aggregate and covering Consultant against all sums that Consultant may be obligated to pay on account of any liability arising out deviation from the professional standard of care set forth in the Agreement. If the policy is a claims made policy, it shall remain in effect for 5 years after the work has been completed.

F. Village as Additional Insured. Village shall be named as an Additional Insured on all policies except for:

Worker's Compensation

Professional Liability

Each such additional Insured endorsement shall identify Village as follows: Village of Schaumburg, including its Board members and elected and appointed officials, its officers, and employees.

G. Other Parties as Additional Insureds. In addition to Village, the following parties shall be named as additional insured on the following policies:

Additional Insured	Policy or Policies
_____	_____
_____	_____

The Consultant will provide certificates of insurance evidencing the types and limits of insurance specified. The certificates of insurance will specifically address each of the requirements noted. All insurance noted is primary and in no event will be considered contributory to any insurance purchased by the Village.

The same full insurance coverage provided to the named insured, whether it is the Consultant or a sub-contractor, shall be provided to the Village without any limitations or endorsements that might limit or exclude coverage.

Any and all deductibles or other forms of retention are the responsibility of the Consultant. All deductibles or other forms of retention are subject to the approval of the Village. Consultant will disclose to the Village in writing the amounts of any deductible or self-insured retentions on the insurance required under this contract.

Consultant waives any right of subrogation it may have or later acquire against the Village.

The Consultant shall not allow any subcontractor to commence work on their subcontract until the same insurance has been obtained by the subcontractor. The Consultant and their subcontractor(s) shall maintain all insurance required for not less than one (1) year after completion of this contract except professional liability which shall be for 5 years.

VILLAGE OF SCHAUMBURG

AGENDA ITEM SUMMARY

Recommendation to Approve a Resolution for Eliminating the Need for Surety Bond Requirements for Permit Work to be Performed on State Maintained Right-of-Way
04/14/26
Village Board

Presenter: Brent R. McQueen, Engineering Division Manager
Lead Department: Engineering and Public Works

Executive Summary:

Chapter 605 of the Illinois Compiled Statutes (605 ILCS 5/4-101 et seq.) requires that any person, firm, or company wishing to perform work on state-maintained right-of-way must first obtain a written permit from the Illinois Department of Transportation (IDOT). This requirement applies to emergency work on broken water mains, sewers, or other Village owned infrastructures.

To ensure compliance with state specifications and proper restoration of the right-of-way, a surety bond must accompany each permit application. However, if the permit work is to be carried out by employees of a municipality or contractors acting on the municipality's behalf, a certified Resolution may be submitted in place of the required surety bond.

By obtaining this Resolution, Village employees can perform work on state-maintained right-of-way without undergoing a lengthy permit application process; it will also grant the same privilege to contractors hired by the Village to perform work in state-maintained right-of-way. This Resolution is intended for normal restoration of emergency work on Village infrastructure. Any new improvements to be installed within state right-of-way will still require a state permit and surety bond for the new work if performed by a hired contractor. The resolution covers a duration of two years (2026-2027) and a new Resolution will be needed for each subsequent two-year period.

Resolution No. R-23-093 pertaining to this matter expired at the end of 2025.

Recommended Action:

The Village Manager recommends that the Engineering and Public Works Committee recommend the Village Board approve a Resolution eliminating the need for a surety bond requirement for permit work to be performed by the Village of Schaumburg on state maintained right-of-way.

ATTACHMENTS:
- Resolution

RESOLUTION NO R-26-_____

A RESOLUTION ELIMINATING THE NEED FOR A SURETY BOND REQUIREMENT FOR PERMIT WORK TO BE PERFORMED BY THE VILLAGE OF SCHAUMBURG ON STATE MAINTAINED RIGHT-OF-WAY

WHEREAS, the Village of Schaumburg, located in the counties of Cook and DuPage, State of Illinois, desire to undertake, in the years 2026 and 2027, the location, construction, operation, and maintenance of driveways and street returns, water mains, sanitary, and storm sewers, street lights, traffic signals, sidewalks, landscaping, etc., on State highways, within said Village, which by law and/or agreement come under the jurisdiction and control of the Department of Transportation of the State of Illinois hereinafter referred to as Department; and

WHEREAS, an individual working permit must be obtained from the Department prior to any of the aforesaid installations being constructed by either the Village of Schaumburg or by a private person or firm under contract and supervision of the Village of Schaumburg.

NOW, THEREFORE, BE IT RESOLVED BY THE PRESIDENT AND BOARD OF TRUSTEES OF THE VILLAGE OF SCHAUMBURG:

SECTION ONE: That the Village of Schaumburg hereby pledges its good faith and guarantees that all work shall be performed in accordance with conditions of the permit to be granted by the Department, and to hold the State of Illinois harmless during the prosecution of such work, and assume all liability for damages to person or property due to accidents or otherwise by reason of the work which is to be performed under the provisions of said permit.

SECTION TWO: That all authorized officials of the Village of Schaumburg are hereby instructed and authorized to sign said working permit on behalf of the Village of Schaumburg.

SECTION THREE: That the Village Clerk certify a copy of this Resolution and forward it to the Illinois Department of Transportation, Region One Engineer.

SECTION FOUR: That this Resolution shall be in full force and effect after passage and approval as required by law.

AYES:

NAYS:

ABSENT:

PASSED AND APPROVED this _____ day of _____, 2026.

_____
Village President

ATTEST:

_____
Village Clerk

VILLAGE OF SCHAUMBURG

AGENDA ITEM SUMMARY

Recommendation to Award Bid for the 2026 Street Improvement Program – Contract No. 1 to Builders Paving LLC
04/14/26
Village Board

Presenter: Joe Velna, Engineering Inspector
Lead Department: Engineering and Public Works

Account(s):	Budget:	Expense Request:
4409010-7454 (23029-20-230)	$3,533,555.12	$3,026,485.45
2149010-7454 (27007-20-230)	$150,000.00	$167,322.55

Executive Summary:

The 2026 Residential Street Improvement Program includes:

- 18.45 miles of Preventive Maintenance
- 3.52 miles of Corrective Resurfacing
- 3.18 miles of Modified Reconstruction
- 1.03 Miles of Reconstruction
- Parking Lot Rehabilitation
- Bike Path Improvements Program
- Concrete Pavement Patching (where required)

Similar to previous years, staff organized the 2026 Street Improvement Program improvements to be bid as two separate contracts, Contract No. 1 and Contract No. 2. This split allows more efficient management and enables the Village to bid them in a fiscally efficient manner. The FY 26/27 Street Improvement Program Contract No. 1 consists of 1.92 miles of Reconstruction/Modified Reconstruction and 2.26 miles of Corrective Resurfacing. Attachment lists the streets included in the 2026 Street Improvement Program – Contract No.1.

Bids for Contract No. 1 were opened on March 6, 2026, with two contractors submitting bids. The Illinois Municipal Code requires the Village to award the projects to the lowest responsible bidder. The low bid for this project was submitted by Builders Paving, LLC (Builders) of Hillside, IL, in the amount of $3,193,808. Builders has successfully completed approximately $12.4 Million in Village of Schaumburg Street Improvement Program contracts over the past two fiscal years. Builders maintains a current Illinois Department of Transportation (IDOT) Prequalification for Hot-Mix Asphalt paving and meets all the Village of Schaumburg qualifications outlined in the project specifications. Builders will provide a Certificate of Insurance and a Performance Bond as part of the award process.

The Village's Capital Improvement Program (CIP) includes funds to cover the Village's Street Improvement Program. The Village has budgeted approximately $3.5 million in the Capital

Improvement Fund and $150,000 in the Community Development Block Grant (CDBG) Fund in FY 26/27 for construction of the improvements. Builders' proposal is under budget overall, but the proposal is slightly over budget with respect to the CDBG improvements. Staff will process a mid-year amendment to address the shortfall in CDBG funds.

Recommended Action:

The Village Manager recommends the Engineering and Public Works Committee recommend the Village Board award the bid for the 2026 Street Improvement Program – Contract No. 1 to the lowest responsible bidder, Builders Paving LLC of Hillside, IL, in the amount of $3,193,808.

ATTACHMENTS:

- Street List
- Bid Tab
- Bid Submittal
- Plote - Protest Letter

2026 Street Program - Contract 1		
Consultant- Engineering Enterprises Inc.		
Contractor - Builders Paving, LLC		
STREET	**FROM**	**TO**
AIMTREE PLACE	SALEM DRIVE	ALDEN LANE
AIMTREE PLACE	TRURO COURT	BRAINTREE DRIVE
ALLISON LANE	BRAINTREE DRIVE	IVERSON LANE
ARLEEN COURT	WALNUT LANE	EAST END
BARCLIFFE LANE	SAGAMORE DRIVE	NORTH END
BERRY COURT	WEST END	WALNUT LANE
BRISTOL LANE	PARKER DRIVE	SOUTH END
CHALFONT DRIVE	IVERSON LANE	SELKIRK DRIVE
COLWYN DRIVE	SPRINGINSGUTH ROAD	BRAINTREE DRIVE
COVEHILL COURT	NORTH END	SAGAMORE DRIVE
ELMHURST LANE	IVERSON LANE	SELKIRK DRIVE
HYANNIS COURT	SALEM DRIVE	EAST END
IVERSON LANE	COLWYN DRIVE	ELMHURST LANE
IVY COURT	LINSEY AVENUE	EAST END
LINSEY AVENUE	LAWSON ROAD	N WALNUT LANE
LEEDS PASS	CHALFONT DRIVE	BRAINTREE DRIVE
MELODY COURT	LINSEY AVENUE	EAST END
MILTON LANE	BRISTOL LANE	VILLAGE LIMITS
*ODLUM COURT	NORTH END	ODLUM DRIVE
OSAGE LANE	SALEM DRIVE	VILLAGE LIMITS
PARKER DRIVE	SALEM DRIVE	BRISTOL LANE
PATUXET COURT	NORTH END	PERTH DRIVE
QUANSET COURT	SAGAMORE DRIVE	EAST END
QUANSET COURT	WEST END	SAGAMORE DRIVE
ROCKNE COURT	WALNUT LANE	SOUTH END
ROSE COURT	LESLIE LANE	EAST END
ROMM COURT	WALNUT LANE	EAST END
SANTUIT COURT	WEST END	SALEM DRIVE
SELKIRK DRIVE	CHALFONT DRIVE	ALLISON LANE
SHATTUCK COURT	NORTH END	SHATTUCK LANE
SKYVUE LANE	HITCHING POST LANE	WALNUT LANE
STOUGHTON COURT	WEST END	SAGAMORE DRIVE
TOBEY COURT	WEST END	SAGAMORE DRIVE
TRURO COURT	NORTH END	AIMTREE PLACE
VIOLA COURT	WALNUT LANE	SOUTH END
WAPOOS COURT	NORTH END	SAGAMORE DRIVE
WHIDAH COURT	NORTH END	SAGAMORE DRIVE
*WINFIELD COURT	HEATHERWOOD DRIVE	SOUTH END

*fully funded by CDBG funds

				Builders Paving, LLC		Plote Construction Inc.	
Line Item	Description	Quantity	Unit of Measure	Unit Cost	Total	Unit Cost	Total
20201200	REMOVAL AND DISPOSAL OF UNSUITABLE MATERIAL	269	CU YD	$40.00	$10,760.00	$5.00	$1,345.00
20700420	POROUS GRANULAR EMBANKMENT, SUBGRADE	269	CU YD	$40.00	$10,760.00	$5.00	$1,345.00
21001000	GEOTECHNICAL FABRIC FOR GROUND STABILIZATION	2269	SQ YD	$1.50	$3,403.50	$.60	$1,361.40
31101600	SUBBASE GRANULAR MATERIAL, TYPE B 6"	2269	SQ YD	$19.00	$43,111.00	$8.00	$18,152.00
VS311016	SUBBASE PREPARATION	2269	SQ YD	$2.00	$4,538.00	$.25	$567.25
VOS440034	BITUMINOUS MATERIALS – TRACKLESS TACK COAT	68230	POUND	$.01	$682.30	$.01	$682.30
VOS440030	IL-9.5FG C N30 SCHAUMBURG LEVELING BINDER COURSE (MACHINE METHOD)	7129	TON	$70.00	$499,030.00	$86.00	$613,094.00
VSXXXX1	IL-9.5FG C N30 SCHAUMBURG SURFACE COURSE (MACHINE METHOD)	195	TON	$80.00	$15,600.00	$87.00	$16,965.00
40603080	HOT-MIX ASPHALT BINDER COURSE, IL-19.0, N50	1733	TON	$83.00	$143,839.00	$85.00	$147,305.00
VOS440032	IL-4.75 SCHAUMBURG SURFACE FRICTION COURSE	5267	TON	$86.00	$452,962.00	$110.00	$579,370.00
42300100	PORTLAND CEMENT CONCRETE DRIVEWAY PAVEMENT, 5 INCH	1186	SQ YD	$70.00	$83,020.00	$75.00	$88,950.00
X0327611	REMOVE AND REINSTALL BRICK PAVERS	30	SQ FT	$16.00	$480.00	$30.00	$900.00
42400200	PORTLAND CEMENT CONCRETE SIDEWALK, 5 INCH	34879	SQ FT	$8.00	$279,032.00	$10.00	$348,790.00
42400800	DETECTABLE WARNINGS	690	SQ FT	$2.50	$1,725.00	$35.00	$24,150.00
44000100	PAVEMENT REMOVAL	10000	SQ YD	$7.50	$75,000.00	$11.00	$110,000.00
VOS440042	HOT-MIX ASPHALT SURFACE REMOVAL, VARIABLE DEPTH (0"-3")	60811	SQ YD	$4.00	$243,244.00	$4.25	$258,446.75
44000200	DRIVEWAY PAVEMENT REMOVAL	1286	SQ YD	$12.00	$15,432.00	$11.00	$14,146.00
44000500	COMBINATION CURB AND GUTTER REMOVAL	11208	FOOT	$4.00	$44,832.00	$4.50	$50,436.00
44000600	SIDEWALK REMOVAL	34879	SQ FT	$1.00	$34,879.00	$1.50	$52,318.50
44201717	CLASS D PATCHES, TYPE II, 6 INCH	829	SQ YD	$37.00	$30,673.00	$10.00	$8,290.00
44201721	CLASS D PATCHES, TYPE III, 6 INCH	1241	SQ YD	$32.50	$40,332.50	$10.00	$12,410.00
44201723	CLASS D PATCHES, TYPE IV, 6 INCH	2055	SQ YD	$28.00	$57,540.00	$10.00	$20,550.00
VS442000	CLASS D PATCHES, 3 INCH (SPECIAL)	8	SQ YD	$360.00	$2,880.00	$99.00	$792.00
60207505	CATCH BASINS, TYPE C, 2'-DIAMETER, TYPE 6 FRAME AND GRATE	1	EACH	$2,630.00	$2,630.00	$2,700.00	$2,700.00
60200105	CATCH BASINS, TYPE A, 4'-DIAMETER, TYPE 1 FRAME AND GRATE, OPEN LID	11	EACH	$4,550.00	$50,050.00	$4,600.00	$50,600.00
60200705	CATCH BASINS, TYPE A, 4'-DIAMETER, TYPE 6 FRAME AND GRATE	19	EACH	$4,800.00	$91,200.00	$4,800.00	$91,200.00
VS602007	CATCH BASINS, TYPE A, 4'-DIAMETER, TYPE 6 FRAME AND GRATE, SPECIAL	1	EACH	$5,425.00	$5,425.00	$5,500.00	$5,500.00
60201105	CATCH BASINS, TYPE A, 4'-DIAMETER, TYPE 11 FRAME AND GRATE	1	EACH	$5,150.00	$5,150.00	$5,150.00	$5,150.00
VSXXXX2	CATCH BASINS, TYPE A, 4'-DIAMETER, RE-USE EXISTING FRAME	9	EACH	$4,120.00	$37,080.00	$4,120.00	$37,080.00
60234200	INLETS, TYPE A, TYPE 1 FRAME, OPEN LID	1	EACH	$1,920.00	$1,920.00	$2,000.00	$2,000.00
60236100	INLETS, TYPE A, TYPE 6 FRAME AND GRATE	1	EACH	$2,110.00	$2,110.00	$2,200.00	$2,200.00
VS602361	INLETS, TYPE A, TYPE 6 FRAME AND GRATE, SPECIAL	1	EACH	$2,460.00	$2,460.00	$2,500.00	$2,500.00
60236800	INLETS, TYPE A, TYPE 11 FRAME AND GRATE	1	EACH	$2,175.00	$2,175.00	$2,200.00	$2,200.00
60300105	FRAMES AND GRATES TO BE ADJUSTED	31	EACH	$400.00	$12,400.00	$400.00	$12,400.00
60500060	REMOVING INLETS	39	EACH	$85.00	$3,315.00	$85.00	$3,315.00
60500050	REMOVING CATCH BASINS	1	EACH	$300.00	$300.00	$300.00	$300.00
60603800	COMBINATION CONCRETE CURB AND GUTTER, TYPE B-6.12	348	FOOT	$29.25	$10,179.00	$31.50	$10,962.00
60604400	COMBINATION CONCRETE CURB AND GUTTER, TYPE B-6.18	10	FOOT	$50.00	$500.00	$31.50	$315.00
VS606001	COMBINATION CONCRETE CURB AND GUTTER, TYPE M-3.12	10720	FOOT	$29.25	$313,560.00	$32.50	$348,400.00
VS701000	TRAFFIC CONTROL AND PROTECTION	1	L SUM	$152,845.25	$152,845.25	$204,900.00	$204,900.00
VS701001	TRAFFIC CONTROL AND PROTECTION (SPECIAL)	1	L SUM	$500.00	$500.00	$1,200.00	$1,200.00
78001100	PAINT PAVEMENT MARKING - LETTERS AND SYMBOLS	10	SQ FT	$5.00	$50.00	$8.10	$81.00
78001110	PAINT PAVEMENT MARKING - LINE 4"	3870	FOOT	$.46	$1,780.20	$.70	$2,709.00
78001130	PAINT PAVEMENT MARKING - LINE 6"	10	FOOT	$.55	$5.50	$1.05	$10.50
78001150	PAINT PAVEMENT MARKING - LINE 12"	10	FOOT	$1.10	$11.00	$2.25	$22.50
78001180	PAINT PAVEMENT MARKING - LINE 24"	220	FOOT	$2.21	$486.20	$4.50	$990.00
X7015000	CHANGEABLE MESSAGE SIGN	2	CAL MO	$900.00	$1,800.00	$900.00	$1,800.00
VS211001	TOPSOIL	372	CU YD	$65.00	$24,180.00	$5.00	$1,860.00
VS251000	SEDIMENT CONTROL, DRAINAGE STRUCTURE, INLET FILTER	154	EACH	$50.00	$7,700.00	$125.00	$19,250.00
VS252001	SODDING	6379	SQ YD	$12.00	$76,548.00	$8.00	$51,032.00
20101700	SUPPLEMENTAL WATERING	10	UNIT	$50.00	$500.00	$10.00	$100.00
VS406002	HOT-MIX ASPHALT DRIVEWAY PAVEMENT, 3 INCH	100	SQ YD	$60.00	$6,000.00	$70.00	$7,000.00
550A0050	STORM SEWERS, CLASS A, TYPE 2, 12"	15	FOOT	$68.00	$1,020.00	$68.00	$1,020.00
550A0120	STORM SEWERS, CLASS A, TYPE 2, 24"	15	FOOT	$120.00	$1,800.00	$120.00	$1,800.00
VSXXXX3	STORM SEWER POINT REPAIR, SPECIAL	1	EACH	$2,515.00	$2,515.00	$2,600.00	$2,600.00
VS602000	STRUCTURES TO BE ADJUSTED WITH NEW TYPE 1 FRAME, OPEN LID	1	EACH	$865.00	$865.00	$900.00	$900.00
VS602004	STRUCTURES TO BE ADJUSTED WITH NEW TYPE 1 FRAME, CLOSED LID	1	EACH	$865.00	$865.00	$900.00	$900.00
VS602002	STRUCTURES TO BE ADJUSTED WITH NEW TYPE 6 FRAME AND GRATE	28	EACH	$1,010.00	$28,280.00	$1,100.00	$30,800.00
VS602003	STRUCTURES TO BE ADJUSTED WITH NEW TYPE 6 FRAME AND GRATE, SPECIAL	1	EACH	$1,410.00	$1,410.00	$1,500.00	$1,500.00
VS602001	STRUCTURES TO BE ADJUSTED WITH NEW TYPE 11 FRAME AND GRATE	2	EACH	$1,125.00	$2,250.00	$1,200.00	$2,400.00
60261300	STRUCTURES TO BE ADJUSTED WITH NEW TYPE 11 FRAME AND GRATE, SPECIAL	1	EACH	$1,700.00	$1,700.00	$1,700.00	$1,700.00
VS602005	SANITARY STRUCTURES TO BE ADJUSTED	7	EACH	$1,050.00	$7,350.00	$1,100.00	$7,700.00
VS602006	SANITARY STRUCTURES TO BE ADJUSTED WITH NEW TYPE 1 FRAME, CLOSED LID	1	EACH	$1,490.00	$1,490.00	$1,500.00	$1,500.00
VOS440051	EMERGENCY RAMP	50	TON	$5.00	$250.00	$50.00	$2,500.00
VOS0002	PEDESTRIAN ENHANCEMENT IMPROVEMENTS	2500	SQ FT	$22.95	$57,375.00	$23.00	$57,500.00
VOS0001	DRAINAGE STRUCTURE RECONSTRUCTION	10	EACH	$1,270.00	$12,700.00	$1,270.00	$12,700.00
20201200CDBG	REMOVAL AND DISPOSAL OF UNSUITABLE MATERIAL - CDBG FUNDED	220	CU YD	$40.00	$8,800.00	$35.00	$7,700.00
20700420CDBG	POROUS GRANULAR EMBANKMENT, SUBGRADE - CDBG FUNDED	220	CU YD	$40.00	$8,800.00	$55.00	$12,100.00
21001000CDBG	GEOTECHNICAL FABRIC FOR GROUND STABILIZATION - CDBG FUNDED	1971	SQ YD	$1.50	$2,956.50	$2.00	$3,942.00
31101600CDBG	SUBBASE GRANULAR MATERIAL, TYPE B 6" - CDBG FUNDED	1971	SQ YD	$19.00	$37,449.00	$11.00	$21,681.00
VS311016CDBG	SUBBASE PREPARATION - CDBG FUNDED	1971	SQ YD	$2.00	$3,942.00	$.10	$197.10
VOS440034CDBG	BITUMINOUS MATERIALS – TRACKLESS TACK COAT - CDBG FUNDED	5330	POUND	$.01	$53.30	$.01	$53.30
VOS440030CDBG	IL-9.5FG C N30 SCHAUMBURG LEVELING BINDER COURSE (MACHINE METHOD) - CDBG FUNDED	225	TON	$70.00	$15,750.00	$86.00	$19,350.00
40603080CDBG	HOT-MIX ASPHALT BINDER COURSE, IL-19.0, N50 - CDBG FUNDED	360	TON	$83.00	$29,880.00	$85.00	$30,600.00
VOS440032CDBG	IL-4.75 SCHAUMBURG SURFACE FRICTION COURSE - CDBG FUNDED	149	TON	$86.00	$12,814.00	$110.00	$16,390.00
42400200CDBG	PORTLAND CEMENT CONCRETE SIDEWALK, 5 INCH - CDBG FUNDED	504	SQ FT	$9.50	$4,788.00	$10.00	$5,040.00
42400800CDBG	DETECTABLE WARNINGS - CDBG FUNDED	24	SQ FT	$25.00	$600.00	$30.00	$720.00
44000100CDBG	PAVEMENT REMOVAL - CDBG FUNDED	1971	SQ YD	$7.50	$14,782.50	$15.00	$29,565.00
44000200CDBG	DRIVEWAY PAVEMENT REMOVAL - CDBG FUNDED	170	SQ YD	$12.00	$2,040.00	$10.00	$1,700.00
44000500CDBG	COMBINATION CURB AND GUTTER REMOVAL - CDBG FUNDED	229	FOOT	$6.00	$1,374.00	$4.50	$1,030.50
44000600CDBG	SIDEWALK REMOVAL - CDBG FUNDED	504	SQ FT	$2.50	$1,260.00	$1.50	$756.00
60300105CDBG	FRAMES AND GRATES TO BE ADJUSTED - CDBG FUNDED	3	EACH	$425.00	$1,275.00	$425.00	$1,275.00
60603800CDBG	COMBINATION CONCRETE CURB AND GUTTER, TYPE B-6.12 - CDBG FUNDED	22	FOOT	$35.25	$775.50	$31.50	$693.00
VS606001CDBG	COMBINATION CONCRETE CURB AND GUTTER, TYPE M-3.12 - CDBG FUNDED	207	FOOT	$35.25	$7,296.75	$32.50	$6,727.50
VS211001CDBG	TOPSOIL - CDBG FUNDED	6	CU YD	$65.00	$390.00	$5.00	$30.00
VS251000CDBG	SEDIMENT CONTROL, DRAINAGE STRUCTURE, INLET FILTER - CDBG FUNDED	4	EACH	$50.00	$200.00	$125.00	$500.00
VS252001CDBG	SODDING - CDBG FUNDED	158	SQ YD	$12.00	$1,896.00	$9.00	$1,422.00
VS406002CDBG	HOT-MIX ASPHALT DRIVEWAY PAVEMENT, 3 INCH - CDBG FUNDED	170	SQ YD	$60.00	$10,200.00	$65.00	$11,050.00
	Total				**$3,193,808.00**		**$3,536,185.60**

Village of Schaumburg
Engineering and Public Works
Mike Hall, Department Director
Atcher Municipal Center, Schaumburg, IL 60193

[BUILDERS PAVING, LLC] RESPONSE DOCUMENT REPORT

IFB No. 2026-IFB-005

Street Recon and Repair Program - Contract 1

RESPONSE DEADLINE: March 6, 2026 at 1:00 pm

Report Generated: Tuesday, March 17, 2026

Builders Paving, LLC Response

CONTACT INFORMATION

Company:
Builders Paving, LLC

Email:
ssalinas@builderspavingllc.com

Contact:
Steven Salinas

Address:
4401 Roosevelt Road
Hillside, IL 60162

Phone:
N/A

Website:
www.thebuildersco.com

Submission Date:
Mar 6, 2026 12:20 PM (Central Time)

PRICE TABLES

Line Item	Description	Quantity	Unit of Measure	Unit Cost	Total
20201200	REMOVAL AND DISPOSAL OF UNSUITABLE MATERIAL	269	CU YD	$40.00	$10,760.00
20700420	POROUS GRANULAR EMBANKMENT, SUBGRADE	269	CU YD	$40.00	$10,760.00
21001000	GEOTECHNICAL FABRIC FOR GROUND STABILIZATION	2,269	SQ YD	$1.50	$3,403.50
31101600	SUBBASE GRANULAR MATERIAL, TYPE B 6"	2,269	SQ YD	$19.00	$43,111.00
VS311016	SUBBASE PREPARATION	2,269	SQ YD	$2.00	$4,538.00
VOS440034	BITUMINOUS MATERIALS – TRACKLESS TACK COAT	68,230	POUND	$0.01	$682.30
VOS440030	IL-9.5FG C N30 SCHAUMBURG LEVELING BINDER COURSE (MACHINE METHOD)	7,129	TON	$70.00	$499,030.00
VSXXXX1	IL-9.5FG C N30 SCHAUMBURG SURFACE COURSE (MACHINE METHOD)	195	TON	$80.00	$15,600.00
40603080	HOT-MIX ASPHALT BINDER COURSE, IL-19.0, N50	1,733	TON	$83.00	$143,839.00
VOS440032	IL-4.75 SCHAUMBURG SURFACE FRICTION COURSE	5,267	TON	$86.00	$452,962.00
42300100	PORTLAND CEMENT CONCRETE DRIVEWAY PAVEMENT, 5 INCH	1,186	SQ YD	$70.00	$83,020.00
X0327611	REMOVE AND REINSTALL BRICK PAVERS	30	SQ FT	$16.00	$480.00
42400200	PORTLAND CEMENT CONCRETE SIDEWALK, 5 INCH	34,879	SQ FT	$8.00	$279,032.00
42400800	DETECTABLE WARNINGS	690	SQ FT	$2.50	$1,725.00
44000100	PAVEMENT REMOVAL	10,000	SQ YD	$7.50	$75,000.00

Line Item	Description	Quantity	Unit of Measure	Unit Cost	Total
VOS440042	HOT-MIX ASPHALT SURFACE REMOVAL, VARIABLE DEPTH (0"-3")	60,811	SQ YD	$4.00	$243,244.00
44000200	DRIVEWAY PAVEMENT REMOVAL	1,286	SQ YD	$12.00	$15,432.00
44000500	COMBINATION CURB AND GUTTER REMOVAL	11,208	FOOT	$4.00	$44,832.00
44000600	SIDEWALK REMOVAL	34,879	SQ FT	$1.00	$34,879.00
44201717	CLASS D PATCHES, TYPE II, 6 INCH	829	SQ YD	$37.00	$30,673.00
44201721	CLASS D PATCHES, TYPE III, 6 INCH	1,241	SQ YD	$32.50	$40,332.50
44201723	CLASS D PATCHES, TYPE IV, 6 INCH	2,055	SQ YD	$28.00	$57,540.00
VS442000	CLASS D PATCHES, 3 INCH (SPECIAL)	8	SQ YD	$360.00	$2,880.00
60207505	CATCH BASINS, TYPE C, 2'-DIAMETER, TYPE 6 FRAME AND GRATE	1	EACH	$2,630.00	$2,630.00
60200105	CATCH BASINS, TYPE A, 4'-DIAMETER, TYPE 1 FRAME AND GRATE, OPEN LID	11	EACH	$4,550.00	$50,050.00
60200705	CATCH BASINS, TYPE A, 4'-DIAMETER, TYPE 6 FRAME AND GRATE	19	EACH	$4,800.00	$91,200.00
VS602007	CATCH BASINS, TYPE A, 4'-DIAMETER, TYPE 6 FRAME AND GRATE, SPECIAL	1	EACH	$5,425.00	$5,425.00
60201105	CATCH BASINS, TYPE A, 4'-DIAMETER, TYPE 11 FRAME AND GRATE	1	EACH	$5,150.00	$5,150.00
VSXXXX2	CATCH BASINS, TYPE A, 4'-DIAMETER, RE-USE EXISTING FRAME	9	EACH	$4,120.00	$37,080.00
60234200	INLETS, TYPE A, TYPE 1 FRAME, OPEN LID	1	EACH	$1,920.00	$1,920.00
60236100	INLETS, TYPE A, TYPE 6 FRAME AND GRATE	1	EACH	$2,110.00	$2,110.00

Line Item	Description	Quantity	Unit of Measure	Unit Cost	Total
VS602361	INLETS, TYPE A, TYPE 6 FRAME AND GRATE, SPECIAL	1	EACH	$2,460.00	$2,460.00
60236800	INLETS, TYPE A, TYPE 11 FRAME AND GRATE	1	EACH	$2,175.00	$2,175.00
60300105	FRAMES AND GRATES TO BE ADJUSTED	31	EACH	$400.00	$12,400.00
60500060	REMOVING INLETS	39	EACH	$85.00	$3,315.00
60500050	REMOVING CATCH BASINS	1	EACH	$300.00	$300.00
60603800	COMBINATION CONCRETE CURB AND GUTTER, TYPE B-6.12	348	FOOT	$29.25	$10,179.00
60604400	COMBINATION CONCRETE CURB AND GUTTER, TYPE B-6.18	10	FOOT	$50.00	$500.00
VS606001	COMBINATION CONCRETE CURB AND GUTTER, TYPE M-3.12	10,720	FOOT	$29.25	$313,560.00
VS701000	TRAFFIC CONTROL AND PROTECTION	1	L SUM	$152,845.25	$152,845.25
VS701001	TRAFFIC CONTROL AND PROTECTION (SPECIAL)	1	L SUM	$500.00	$500.00
78001100	PAINT PAVEMENT MARKING - LETTERS AND SYMBOLS	10	SQ FT	$5.00	$50.00
78001110	PAINT PAVEMENT MARKING - LINE 4"	3,870	FOOT	$0.46	$1,780.20
78001130	PAINT PAVEMENT MARKING - LINE 6"	10	FOOT	$0.55	$5.50
78001150	PAINT PAVEMENT MARKING - LINE 12"	10	FOOT	$1.10	$11.00
78001180	PAINT PAVEMENT MARKING - LINE 24"	220	FOOT	$2.21	$486.20
X7015000	CHANGEABLE MESSAGE SIGN	2	CAL MO	$900.00	$1,800.00

Line Item	Description	Quantity	Unit of Measure	Unit Cost	Total
VS211001	TOPSOIL	372	CU YD	$65.00	$24,180.00
VS251000	SEDIMENT CONTROL, DRAINAGE STRUCTURE, INLET FILTER	154	EACH	$50.00	$7,700.00
VS252001	SODDING	6,379	SQ YD	$12.00	$76,548.00
20101700	SUPPLEMENTAL WATERING	10	UNIT	$50.00	$500.00
VS406002	HOT-MIX ASPHALT DRIVEWAY PAVEMENT, 3 INCH	100	SQ YD	$60.00	$6,000.00
550A0050	STORM SEWERS, CLASS A, TYPE 2, 12"	15	FOOT	$68.00	$1,020.00
550A0120	STORM SEWERS, CLASS A, TYPE 2, 24"	15	FOOT	$120.00	$1,800.00
VSXXXX3	STORM SEWER POINT REPAIR, SPECIAL	1	EACH	$2,515.00	$2,515.00
VS602000	STRUCTURES TO BE ADJUSTED WITH NEW TYPE 1 FRAME, OPEN LID	1	EACH	$865.00	$865.00
VS602004	STRUCTURES TO BE ADJUSTED WITH NEW TYPE 1 FRAME, CLOSED LID	1	EACH	$865.00	$865.00
VS602002	STRUCTURES TO BE ADJUSTED WITH NEW TYPE 6 FRAME AND GRATE	28	EACH	$1,010.00	$28,280.00
VS602003	STRUCTURES TO BE ADJUSTED WITH NEW TYPE 6 FRAME AND GRATE, SPECIAL	1	EACH	$1,410.00	$1,410.00
VS602001	STRUCTURES TO BE ADJUSTED WITH NEW TYPE 11 FRAME AND GRATE	2	EACH	$1,125.00	$2,250.00
60261300	STRUCTURES TO BE ADJUSTED WITH NEW TYPE 11 FRAME AND GRATE, SPECIAL	1	EACH	$1,700.00	$1,700.00
VS602005	SANITARY STRUCTURES TO BE ADJUSTED	7	EACH	$1,050.00	$7,350.00
VS602006	SANITARY STRUCTURES TO BE ADJUSTED WITH NEW TYPE 1 FRAME, CLOSED LID	1	EACH	$1,490.00	$1,490.00

Line Item	Description	Quantity	Unit of Measure	Unit Cost	Total
VOS440051	EMERGENCY RAMP	50	TON	$5.00	$250.00
VOS0002	PEDESTRIAN ENHANCEMENT IMPROVEMENTS	2,500	SQ FT	$22.95	$57,375.00
VOS0001	DRAINAGE STRUCTURE RECONSTRUCTION	10	EACH	$1,270.00	$12,700.00
20201200CDBG	REMOVAL AND DISPOSAL OF UNSUITABLE MATERIAL - CDBG FUNDED	220	CU YD	$40.00	$8,800.00
20700420CDBG	POROUS GRANULAR EMBANKMENT, SUBGRADE - CDBG FUNDED	220	CU YD	$40.00	$8,800.00
21001000CDBG	GEOTECHNICAL FABRIC FOR GROUND STABILIZATION - CDBG FUNDED	1,971	SQ YD	$1.50	$2,956.50
31101600CDBG	SUBBASE GRANULAR MATERIAL, TYPE B 6" - CDBG FUNDED	1,971	SQ YD	$19.00	$37,449.00
VS311016CDBG	SUBBASE PREPARATION - CDBG FUNDED	1,971	SQ YD	$2.00	$3,942.00
VOS440034CDBG	BITUMINOUS MATERIALS – TRACKLESS TACK COAT - CDBG FUNDED	5,330	POUND	$0.01	$53.30
VOS440030CDBG	IL-9.5FG C N30 SCHAUMBURG LEVELING BINDER COURSE (MACHINE METHOD) - CDBG FUNDED	225	TON	$70.00	$15,750.00
40603080CDBG	HOT-MIX ASPHALT BINDER COURSE, IL-19.0, N50 - CDBG FUNDED	360	TON	$83.00	$29,880.00
VOS440032CDBG	IL-4.75 SCHAUMBURG SURFACE FRICTION COURSE - CDBG FUNDED	149	TON	$86.00	$12,814.00
42400200CDBG	PORTLAND CEMENT CONCRETE SIDEWALK, 5 INCH - CDBG FUNDED	504	SQ FT	$9.50	$4,788.00
42400800CDBG	DETECTABLE WARNINGS - CDBG FUNDED	24	SQ FT	$25.00	$600.00
44000100CDBG	PAVEMENT REMOVAL - CDBG FUNDED	1,971	SQ YD	$7.50	$14,782.50
44000200CDBG	DRIVEWAY PAVEMENT REMOVAL - CDBG FUNDED	170	SQ YD	$12.00	$2,040.00

Line Item	Description	Quantity	Unit of Measure	Unit Cost	Total
44000500CDBG	COMBINATION CURB AND GUTTER REMOVAL - CDBG FUNDED	229	FOOT	$6.00	$1,374.00
44000600CDBG	SIDEWALK REMOVAL - CDBG FUNDED	504	SQ FT	$2.50	$1,260.00
60300105CDBG	FRAMES AND GRATES TO BE ADJUSTED - CDBG FUNDED	3	EACH	$425.00	$1,275.00
60603800CDBG	COMBINATION CONCRETE CURB AND GUTTER, TYPE B-6.12 - CDBG FUNDED	22	FOOT	$35.25	$775.50
VS606001CDBG	COMBINATION CONCRETE CURB AND GUTTER, TYPE M-3.12 - CDBG FUNDED	207	FOOT	$35.25	$7,296.75
VS211001CDBG	TOPSOIL - CDBG FUNDED	6	CU YD	$65.00	$390.00
VS251000CDBG	SEDIMENT CONTROL, DRAINAGE STRUCTURE, INLET FILTER - CDBG FUNDED	4	EACH	$50.00	$200.00
VS252001CDBG	SODDING - CDBG FUNDED	158	SQ YD	$12.00	$1,896.00
VS406002CDBG	HOT-MIX ASPHALT DRIVEWAY PAVEMENT, 3 INCH - CDBG FUNDED	170	SQ YD	$60.00	$10,200.00
TOTAL					**$3,193,808.00**

PLOTE CONSTRUCTION INC.

ROAD BUILDING
SITE DEVELOPMENT

1100 BRANDT DRIVE • HOFFMAN ESTATES, IL 60192

PHONE: (847) 695-9300
Estimating FAX: (847) 695-9317
Administration FAX: (847) 695-7251

March 20, 2026

Via Email and Certified Mail

Village of Schaumburg
Engineering & Public Works Department
101 Schaumburg Court
Schaumburg, IL 60193

Re: Bid Protest – Village of Schaumburg 2026 Street Improvement Program Contract 1
Apparent Low Bidder: Builders Paving, LLC

Dear Sir/Madam:

On behalf of Plote Construction Inc., we respectfully submit this formal protest regarding the apparent low bidder, Builders Paving LLC, for the above-referenced project.

This protest is based on substantial concerns regarding whether the bidder satisfies the legal standard of a "responsible bidder" under Illinois law, including issues related to IDOT-related scrutiny and lack of contract awards dating back to September 2024 totaling 25 contracts worth over $64 Million Dollars.

Illinois Law Requires Award to the Lowest Responsible Bidder

Illinois law requires award to the lowest responsible bidder, not simply the lowest bidder. Municipalities may reject bids where responsibility concerns exist and may consider experience, performance, and capacity.

Responsibility Includes Integrity and Performance

Responsibility includes past performance, experience, capacity, and compliance with laws and regulations.

IDOT-Related Prequalification Concerns

Multiple media reports indicate that The Illinois Department of Transportation is reviewing the prequalification application of Builders Paving, LLC. These concerns raise questions regarding compliance, performance, reliability and integrity. Furthermore, IDOT Local Roads and Streets Recurring Special Provision LRS 6 entitled "Bidding Requirements and Conditions for Contract Proposals" has been included by reference in the contract documents for the above referenced project. This provision indicates that IDOT prequalification is required for bidders.

PLOTE CONSTRUCTION INC.

ROAD BUILDING
SITE DEVELOPMENT

1100 BRANDT DRIVE • HOFFMAN ESTATES, IL 60192

PHONE: (847) 695-9300
Estimating FAX: (847) 695-9317
Administration FAX: (847) 695-7251

Lack of Recent IDOT Awards

Builders Paving's absence of recent IDOT contract awards raises questions regarding current standing and qualifications.

Risk to the Village

Failure to properly evaluate responsibility may result in project risk, delays, and potential legal challenges.

Request for Relief

We request the Village:

1. Conduct a documented responsibility review
2. Require disclosure of relevant issues
3. Deem bidder non-responsible if substantiated
4. Award to lowest responsible bidder

Reservation of Rights

Plote Construction Inc. reserves all rights available under applicable law.

Illinois law requires award to a responsible bidder in the public interest. Please confirm receipt and advise on timeline.

Sincerely,

PLOTE CONSTRUCTION INC

David A. Miller
Vice President of Estimating & Contracts

VILLAGE OF SCHAUMBURG

AGENDA ITEM SUMMARY

Recommendation to Adopt an Ordinance Dissolving the Schaumburg Board of Health
04/14/26
Village Board

Presenter: Fabio Puccini, Fire Chief
Lead Department: Fire Department

Executive Summary:

The Schaumburg Board of Health was originally created to:

"Recommend necessary rules and regulations, recommend such minimum standards for the protection of health in the village to guard against the spread of contagious disease and to prevent by necessary rules the induction of disease, contagious or otherwise, within the corporate limits of the village."

However, the Village of Schaumburg falls under the jurisdiction of the Cook County Department of Public Health, which retains full authority over public health matters. This limits the Village's ability to independently set or enforce health standards. As a result, the Board of Health's recommendations are not actionable if they conflict with county-level directives.

The Board currently has only three members, and recruitment efforts have been unsuccessful. Given the lack of jurisdictional authority and declining participation, the Board no longer serves a functional role in shaping health policy within the Village.

Potential Impacts of Disbanding:

Administrative Efficiency: Eliminating a non-functional advisory body will streamline Village operations and reduce staff time spent supporting a board with limited authority.

Continuity of Health Advocacy: While the Board of Health will be dissolved, the Village continues to support health-related efforts through:

The Committee on Aging which sponsors events and programs throughout the year.

The Nursing & Senior Services Division will continue to support health-related efforts.

Additional Notes:

The Village remains committed to public health through other active initiatives. Schaumburg maintains a robust Committee on Aging and the Nursing & Senior Services Division group, ensuring that health-related concerns are still being addressed through targeted and effective programming.

Recommended Action:

The Village Manager recommends the Health and Human Services Committee recommend that the Village Board adopt an Ordinance Dissolving the Schaumburg Board of Health.

ATTACHMENTS:

- Ordinance_Dissolving_Board_of_Health (2).docx
- Farnsworth Ltr.pdf
- PD Response Dr. Farnsworth Ltr.pdf
- Village President Memo. Dr. Farnsworth.pdf

PUBLICATION OF:

ORDINANCE NO. _____

ORDINANCE DISSOLVING THE SCHAUMBURG BOARD OF HEALTH.

ADOPTED: APRIL 14, 2026

PUBLISHED IN PAMPHLET FORM

PURSUANT TO AUTHORIZATION AND DIRECTION

OF THE PRESIDENT AND BOARD OF TRUSTEES

OF THE VILLAGE OF SCHAUMBURG ON APRIL 15, 2026

ORDINANCE NO. _____

AN ORDINANCE DISSOLVING THE SCHAUMBURG BOARD OF HEALTH

WHEREAS, the Village of Schaumburg ("Village") is a home rule municipality organized and operating under Article VII, Section 6 of the Illinois Constitution of 1970; and

WHEREAS, the Village previously created the Schaumburg Board of Health ("Board of Health") for the purpose of recommending necessary rules and regulations, and recommending minimum standards for the protection of health in the Village to guard against the spread of contagious diseases and to prevent the induction of disease within the Village; and

WHEREAS, the Village of Schaumburg falls under the jurisdiction of the Cook County Department of Public Health ("CCDPH"), which retains full statutory authority over public health matters within Cook County, thereby limiting the Village's ability to independently adopt or enforce health standards or recommendations that conflict with CCDPH directives; and

WHEREAS, as a result of CCDPH's countywide jurisdiction, the Board of Health's recommendations are advisory only and cannot be independently implemented by the Village where they conflict with county-level requirements; and

WHEREAS, the Board of Health currently has only three members, repeated efforts to recruit additional members have been unsuccessful, and the Board no longer serves a functional or effective role in shaping public health policy within the Village; and

WHEREAS, Village staff has determined that dissolving the Board of Health will promote administrative efficiency by reducing staff time devoted to supporting a non-functional advisory body, and the Village will continue to support public health initiatives through existing programs, including the Committee on Aging and the Nursing & Senior Services Division; and

WHEREAS, the Corporate Authorities of the Village find that the Board of Health is no longer necessary to the operations or governance of the Village and that dissolving the Board of Health is in the best interests of the Village and its residents.

NOW, THEREFORE, BE IT ORDAINED by the President and Board of Trustees of the Village of Schaumburg, Cook County, Illinois, as follows:

SECTION 1. Dissolution of the Board of Health.

The Schaumburg Board of Health is hereby dissolved in its entirety, and all offices, positions, authorities, and responsibilities associated with the Board of Health are hereby abolished. All terms of current members shall terminate automatically upon passage of this Ordinance, without further action.

SECTION 2. Repeal of Prior Ordinances.

All prior ordinances, or portions thereof, that created, established, or governed the Board of Health, or that are otherwise inconsistent with this Ordinance, are hereby repealed.

ORDINANCE NO. _____

AN ORDINANCE DISSOLVING THE SCHAUMBURG BOARD OF HEALTH

SECTION 3. No Successor Board Required.

No successor board, commission, or committee is created by this Ordinance. The Village shall continue supporting health-related initiatives through its existing departments, commissions, and programs.

SECTION 4. Severability.

If any section, paragraph, clause, or provision of this Ordinance is determined to be invalid or unenforceable, such invalidity or unenforceability shall not affect the remaining provisions.

SECTION 5. Effective Date.

This Ordinance shall be in full force and effect upon its passage and approval as provided by law.

PASSED this ___ day of _____, 2026.
APPROVED this ___ day of _____, 2026.

_____

Tom Dailly, Village President

ATTEST:

_____

Jane, Lentino, Village Clerk

RECEIVED
NOV 10 2025
MAYOR'S OFFICE

November 6, 2025

The Honorable Tom Dailly, Mayor, Village of Schaumburg

Dear Mayor Dailly,

For the past few months, since Dr. Sami's resignation, I've served as the interim chairman of the Schaumburg Board of Health. I served as the second by-law required licensed physician on that board for roughly six years.

Over the past several meetings I and the other board members have been debating what actual purpose we have served.

The by-laws state: "The board of public health shall recommend necessary rules and regulations, recommend such minimum standards for the protection of health in the village to guard against the spread of contagious disease and to prevent by necessary rules the induction of disease, contagious or otherwise, within the corporate limits of the village."

Since Schaumburg comes under the jurisdiction of Cook County Department of Public Health and therefore is not free to set its own health standards our committee doesn't really have a role in dictating any health related actions within the village nor would our suggestions carry any significance should they contradict the Cook County Department of Public Health.

The Village also has an active group devoted to Senior issues sponsoring many events of interest to that population throughout the year, as well as an active group addressing mental health issues.

While we would welcome any suggestions as to topics or actions we could pursue, the bottom line is that we feel we don't really serve any definitive purpose at this time and it would appear unlikely there are any particular, useful, issues in the future that would fall under our exclusive, admittedly minimal, jurisdiction. As such we request that the committee disband at this time.

Respectfully,

Schaumburg Board of Health

David Farnsworth, MD Interim Chairperson

David Farnsworth, MD

Vandana Jhingan

Shakeel Ahmed

249 SOUTHWICK LANE
SCH 60173

From: Tom Dailly <tdailly@schaumburg.com>
Sent: Saturday, November 29, 2025 10:54 AM
To: David Farnsworth <dnavigator@aol.com>
Cc: Brian Townsend <btownsend@schaumburg.com>; Kathleen M. Henkelman <khenkelman@schaumburg.com>; Magdalena Gerwel <mgerwel@schaumburg.com>; Vandana Jhingan <vjhingan@yahoo.com>; Shakeel Ahmed <snusayba@gmail.com>
Subject: Your Letter

Dear Dr Farnsworth,

Hope you are doing well. I received your letter (see attached). I have taken some time to reply do to wanting to review potential options for the Board of Health. Unfortunately, I am coming to the same conclusion you reached and that is to dissolve the Board of Health.

You have rightly pointed out that the village's role in determining its own "health" so to speak, is extremely limited as Cook Couty controls jurisdiction. Based on conversation we have had with Cook County and the State of Illinois, they are reluctant to allow us to control our own health needs. I understand Cook Couty and even the State's desire to want to limit the number of agencies they might have to deal with regarding health issues so I am not surprised they are not in favor of us expanding our role.

That said, it does not leave us any real options. With the Board of Health down to just three members and recruitment becoming difficult, now seems to be the time to dissolve the Board. Therefore, I will be recommending to the Village Board's "Health & Human Services Committee" to dissolve the Board of Health. As the next meeting in December falls on Christmas Day, I am guessing the meeting will be cancelled. Assuming that happens, the next meeting would then be January 22nd. You are welcome to attend that meeting. If the H&HS Committee concurs, it would then go before the full Village Board February 10th.

I want to thank you for your service. I also want to say it would be a shame to lose your talents. Might I suggest you investigate the newly formed "Mental Health Board" at Schaumburg Township and see if your talents could be used there? Just a thought.

Take care.

Tom Dailly, Mayor

Village of Schaumburg

101 Schaumburg Court

Schaumburg, IL 60193

847-923-4400

"Progress Through Thoughtful Planning"

VILLAGE OF SCHAUMBURG

PROGRESS THROUGH THOUGHTFUL PLANNING

OFFICE OF MAYOR TOM DAILLY

MEMORANDUM

Date: March 3, 2026
To: Health & Human Services Committee
From: Village President
Subject: Dissolution of Board of Health

To Members of the Health & Human Services Committee

Attached is a letter from the Chairman of the Board of Health Committee recommending the dissolution of the Board of Health Committee. Dissolving an existing committee is not to be taken lightly. After much thought and internal discussion, it is something I have to concur with the Chairman on.

As the Chairman indicates, the village's role in determining its own "health" so to speak, is extremely limited as Cook Couty controls jurisdiction. Based on conversation we have had with Cook County and the State of Illinois, they are reluctant to allow us to control our own health needs due to a variety of reasons. I understand Cook Couty and even the State's desire to want to limit the number of agencies they might have to deal with regarding health issues, so I am not surprised they are not in favor of us expanding our role.

That said, it does not leave us any real options. With the Board of Health down to just three members and recruitment becoming difficult, now seems to be the time to dissolve the Board. Therefore, I will be recommending this committee and the Village Board to dissolve the Board of Health.

Thank you for your consideration.

Respectfully,

Tom Dailly

Tom Dailly
Mayor

RECEIVED
MAR 03 2026
VILLAGE MANAGER'S OFFICE

101 SCHAUMBURG COURT • SCHAUMBURG, ILLINOIS 60193-1899 • 847/895-4500

VILLAGE OF SCHAUMBURG

AGENDA ITEM SUMMARY

Recommendation to Approve an Increase to the Hourly Rate for the Dial-A-Ride Transportation (DART) Service
04/14/26
Village Board

Presenter: Marisa Krawiec, AICP, Transportation Program Manager
Lead Department: Transportation

Account(s):	Budget:	Expense Request:
2104762-7238 (FY27)	$1,940,000	$1,901,932.80

The budget status for this request is: Under Budget

Amount Under Budget: $38,067.20

Executive Summary:

The Village of Schaumburg contracts for operation of the Dial-A-Ride Transportation (DART) service, which is an on-demand bus service that provides approximately 36,000 rides per year. The Village has an established agreement with MV Transportation, Inc., who has been operating the service since 2013.

The agreement terms consist of three base years with an option to extend for two additional one-year terms. FY25 was the first base year of the agreement in the amount of $1,801,254; FY26 was the second base year of the agreement in the amount $1,864,560, and FY27 will be the third base year of the agreement. Per the agreement, subsequent year amounts are to be determined by performance-based merit increases in per-hour price determined by the Consumer Price Index (CPI) for All Urban Consumers, as published by the US Department of Labor, Bureau of Labor Statistics. The CPI is calculated 3 months prior to the contract start. The current index amount is 2%, which would increase the hourly service rate from $114.25 to $116.54.

In order to qualify for the full CPI increase, the service provider also needs to be eligible for the increase based on a Performance Evaluation. The Performance Evaluation measures how service is being provided from an operational perspective, how customers view the service, and helps determine if there will be a contract rate change for the service provider for the next contract year. Historically, the DART index score has been composed of four equally weighted service-related categories (each valued at 25% of the total score; or 100 points possible cumulatively) including:

- Adherence to the 90-minute advance reservation time
- On-time pick-up performance
- Ride length and accuracy of quoted pick-up times
- Customer satisfaction as measured by rider survey responses

Each category has a possible maximum value of 25 points. A minimum of 80 points is required for eligibility to receive a merit increase in the hourly service rate. Based on Staff's evaluation, MV scored 99.6 points, well above the threshold required to receive a merit increase.

MV Transportation, Inc. has a proven history of successfully operating DART. Based on the proposed increase hourly rate, the agreement amount for DART service would increase from $1,864,560 to $1,901,932.80. It should be noted that this amount does not include additional transportation services MV Transportation provides for the village, including Take Your Child to Work Day and Septemberfest. At this time there are no proposed changes in service, and DART will continue to operate Monday through Friday from 6 am to 9 pm.

Recommended Action:

The Village Manager recommends the Village Board approve an hourly rate increase to $116.54 for MV Transportation for Dial-A-Ride Transportation (DART) Service with a total agreement amount not to exceed $1,901,932.80.

ATTACHMENTS:

- FY26 Performance Evaluation Summary

FY 2025-26 Performance Evaluation Summary
MV Transportation, Inc.
Village of Schaumburg Dial-A-Ride Transportation (DART) Operations

This evaluation is a summary of the four performance metrics outlined in the service contract. These metrics are of equal weight and assigned a value of 25 points per metric with a maximum possible score of 100 points. The minimum score required to be eligible for a merit increase is 80 points. The four criteria for this performance evaluation as stated in the service contract are:

- Adherence to the 90-minute advance reservation time
- On-time pick-up performance
- Ride length and accuracy of quoted pick-up times
- Customer satisfaction as measured by rider survey responses

Evaluation Results by Category:

90-Minute Maximum Advance Reservation
All rides (100%) have a maximum time limit from call to pick-up of 90 minutes. For example, if a passenger calls at 11 a.m., it is anticipated that a pick-up will be quoted at approximately 12:30 p.m.

Reservations may be accepted more than 90 minutes in advance of the requested pick-up time. If, due to capacity restraints, a ride cannot be scheduled within the 90-minute window dispatchers may make a reservation in the next available time slot even if that reservation is more than 90 minutes in advance. This caveat prevents riders from having to call back repeatedly looking for subsequent time slots to schedule a ride when they were only denied due to service constraints. Reservations may also be made up to 2.5 hours in advance for specific trips including medical appointments, other appointments, or work.

Due to the above exceptions to the 90-minute advance reservation policy, the achievement of a 95% rate of 90 ≥ minutes from call to pick up will be considered satisfaction of the established contract standard.

- **90-Minute Advance Reservation Rate – 98.57%**
  - **Minimum Performance Requirement: 100%**
  - **Score: 24.6 out of a maximum of 25 points.**

On-Time Pick-Up Performance
Ninety percent of all pickups shall be on time, allowing for a 15-minute pick-up window. For example, if a pick-up time is quoted at 12:30 p.m., the pickup window shall be between 12:30 p.m. and 12:45 p.m.

DART dispatchers give each caller an estimated time for pick-up. An on-time pick-up is defined as one arriving anywhere within the 15-minute time quote.

- **On-Time Pick-Up Performance Rate – 98.2%**
    - **Minimum Performance Requirement: 90%**
    - **Score: 25 out of a maximum of 25 points.**

Ride Length

Ninety percent of travel times will be less than 45 minutes. For example, if a pick-up time occurs at 12:30 p.m., the passenger should be dropped off by 1:15 p.m. and no later than 1:30 p.m. The ride length for each ride is the difference in time between when a passenger is picked and when they are dropped off. The agreement states that the maximum 45-minute length of a DART ride must be achieved 90% of the time, with the goal of achieving all rides within 60 minutes.

- **Ride Length Performance Rate – 97.06%**
    - **Minimum Performance Requirement: 90%**
    - **Score: 25 out of a maximum of 25 points.**

Passenger Survey Response

MV shall achieve an average rating of 3 on a scale of 5 which indicates an acceptable level of service.

The Transportation Department has largely migrated to digital methods for collecting surveys, including QR codes posted in each DART vehicle and a link on the Village of Schaumburg website. Hard copies of surveys are distributed to DART riders upon request either via direct mailing or aboard DART vehicles to help determine customer satisfaction with MV's services. Transportation staff also updated the DART survey to gather more accurate and actionable feedback from passengers. Categories evaluated by riders include, but are not limited to:

- Overall satisfaction with DART
- Satisfaction with Dispatcher, Driver, and MV management staff performance
- Arrival Time
- Length of Ride
- Driver Safety

- **Average Survey Rating – 4.6/5.0**
    - **Minimum Performance Requirement – 3 out of 5**
    - **Score: 25 out of a maximum of 25 points.**

Total Score

Based on the criteria above, MV is eligible for an increase.

- **Minimum score required to be eligible for a rate increase = 80**
- **Total Score- 99.6 out of a possible total of 100**

VILLAGE OF SCHAUMBURG

AGENDA ITEM SUMMARY

Recommendation to Approve Lead-Lag Traffic Signal Operations on Meacham Road
04/14/26
Village Board

Presenter: Sidney Kenyon, Director of Transportation
Lead Department: Transportation

Executive Summary:

Meacham Road is a main north-south artery in the Village of Schaumburg. Beginning in 2026, the Advanced Traffic Management System (ATMS) project will be fully operational and allow for improved signal coordination at fiber-connected signals. To promote improved signal coordination and efficient traffic flow, staff is recommending implementing Lead-Lag traffic signal operations at 7 Village-owned signals on Meacham Road. Lead-Lag operations will improve traffic progression, reduce vehicle emissions, and reduce travel times for residents, commuters, and shoppers in Schaumburg.

For more information, please review the attached memorandum.

Recommended Action:

The Village Manager recommends the Village Board approve Lead-Lag traffic signal operations on Meacham Road and direct staff to implement the signal operations.

ATTACHMENTS:

- Lead Lag Memo
- Lead Lag Example

VILLAGE OF SCHAUMBURG
PROGRESS THROUGH THOUGHTFUL PLANNING

MEMORANDUM

DATE: March 27, 2026

TO: Brian Townsend, Village Manager

FROM: Sidney Kenyon, Director of Transportation

FOR: **Transportation Committee**

SUBJECT: **Recommendation to Approve Lead-Lag Traffic Signal Operations on Meacham Road from Algonquin Road to Higgins Road**

Introduction

In 2024, the Village partnered with the Illinois Department of Transportation (IDOT) to implement the Advanced Traffic Management System (ATMS) traffic signal interconnect project on arterials in the Schaumburg area. In addition to other Village-owned signals in northeastern Schaumburg, ATMS will provide new fiber optic connections on Meacham Road to improve signal coordination and timing. Now that ATMS connections have been completed on the State roads that are part of the project, IDOT has begun implementing signal timing improvements in connected corridors.

Lead-Lag Signal Operations

Traditionally, protected left turn traffic signal phases provide a left turn arrow while opposing traffic is stopped—thus "leading" the phase. "Lagging" left turn phases, by contrast, are provided after opposing traffic is stopped. A Lead-Lag phase combines them both in the same cycle: a leading protected left turn is followed by an overlapping through green, which is then followed by a lagging left turn. This combination allows through movements and left turns to proceed together in each direction. At the corridor level, Lead-Lag signal operations improve signal coordination and timing. More green time is provided for through movements, resulting in more efficient traffic progression and reduced travel times for motorists.

Beginning in March of 2026, IDOT implemented a Lead-Lag pilot for signals on Golf Road (IL 58) from Wilkening Road to Gallagher Way. The 2.9-mile pilot area crosses Schaumburg and Rolling Meadows, carrying between 28,000 and 32,000 vehicles per day through 12 interconnected signals. Prior to the Golf Road pilot, IDOT also implemented a Lead-Lag pilot on North Avenue (IL 64) from IL 53 to Swift Road in Lombard. That stretch of North Avenue carries 40,600 vehicles per day and crosses two on-ramps for I-355.

Staff's on-call traffic signal consultant, Iteris, supported IDOT's implementation of both signal coordination pilots. The North Avenue pilot began in January of 2026, and with 3 months of data Iteris' analytics report that average speeds have improved 12-18%. So far on Golf Road, average speeds have increased 12% in the eastbound direction and 3% going westbound. Staff performed an independent interconnect timing run on Golf Road to confirm Iteris' results, and since November average speed increased by 5 MPH.

Discussion

In 2024 the National Community Survey (NCS) was completed for the Village of Schaumburg. Survey respondents indicated that they were less satisfied overall with traffic signal timing and coordination in the Village than they were in 2021. With 61% of respondents rating Schaumburg's traffic signal timing as excellent or good, that represented a 12-point drop from the 73% satisfaction rating that was reported in 2021. While global circumstances have changed since the last survey was conducted, staff remains committed to ensuring that the Village maintains a high level of performance with its traffic signal network.

Based on the outcomes demonstrated by signal operation improvements on North Avenue and Golf Road, staff is recommending implementation of Lead-Lag for signals on Meacham Road. Meacham Road's characteristics are directly comparable to North Avenue and Golf Road. The proposed pilot area would cover the seven signals owned by the Village between Algonquin Road (IL 62) and Higgins Road (IL 72). The proposed 2.1-mile pilot area on Meacham Road carries between 24,100 and 25,100 vehicles per day, and has a cross section of 3 lanes in each direction. Both Golf Road and North Avenue have similar cross sections in their pilot areas.

If the Village Board approves staff's recommendation, staff will work with our traffic signal consultant to schedule implementation approximately 30 days from approval. Leading up to the implementation date, Transportation would work with Engineering and Public Works to place dynamic messaging signs notifying he public of the start date. IDOT provided advance notice on Golf Road for a two-week period; staff is recommending providing dynamic messaging signs for at least two weeks. In addition, Transportation would work with Communications to provide informational graphics and video to demonstrate how the new signal operations would work. Those materials would be made public in advance of implementation, and would run concurrently with the start of the pilot. Staff will monitor the new signal timings and work with their traffic signal consultant to make any adjustments as needed to ensure motorists can proceed safely along Meacham Road.

Recommendation

The Village Manager recommends that the Transportation Committee Approve Lead-Lag traffic signal operations on Meacham Road and direct staff to implement the signal operations.

Lead-Lag Operations Example

Meacham Road

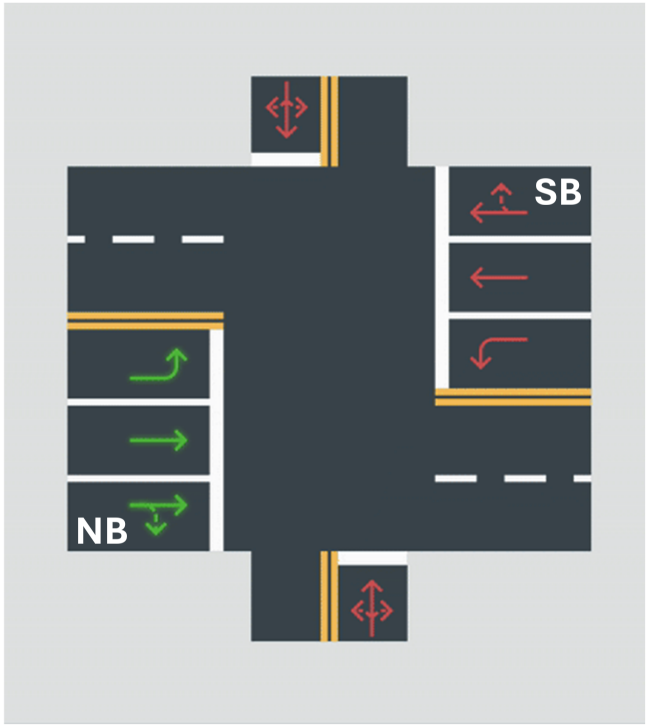

Leading Phase

Southbound Through
Southbound Left Turn
All Northbound Stopped

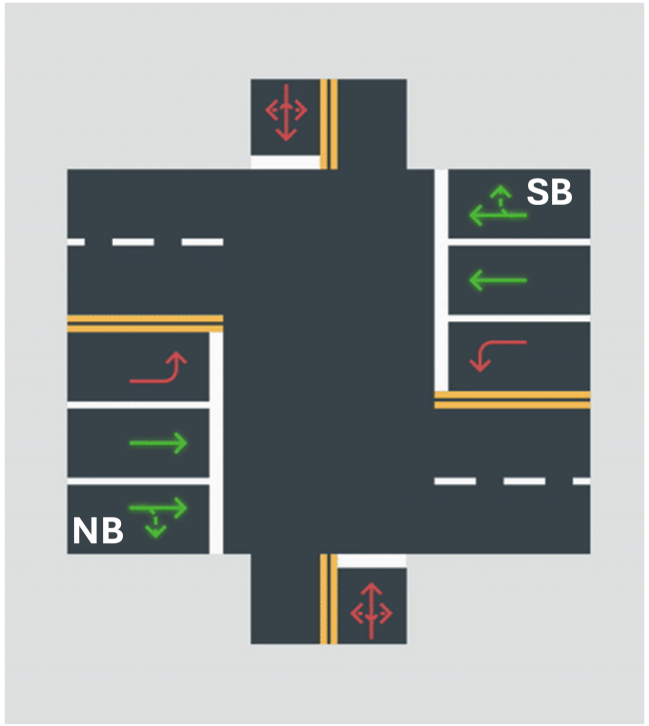

Through Phase

Southbound Through
Northbound Through
All Left Turns Stopped

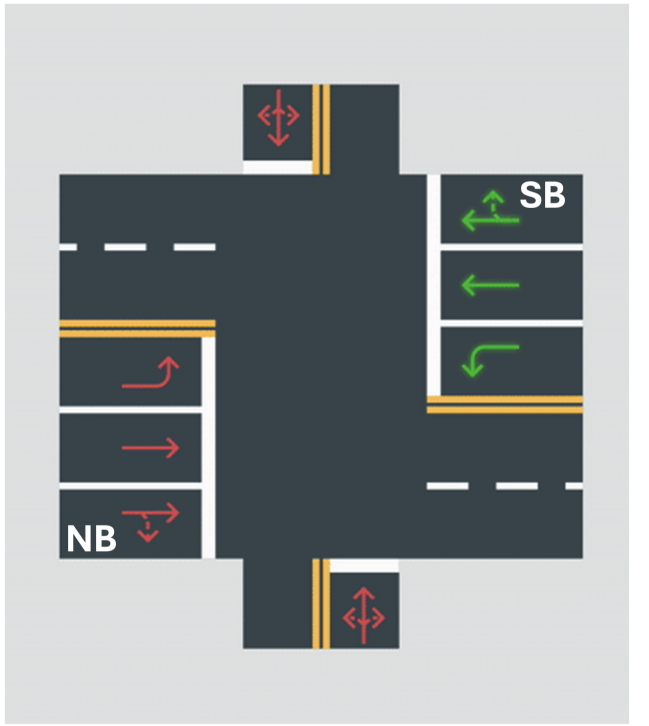

Lagging Phase

Northbound Through
Northbound Left Turn
All Southbound Stopped

VILLAGE OF SCHAUMBURG

AGENDA ITEM SUMMARY

Recommendation to Approve a Contract with Christopher Burke Engineering for Interim Engineering Services
04/14/26
Village Board

Presenter: Ryan Franklin, Assistant Director, Community Development
Lead Department: Community Development

Account(s):	Budget:	Expense Request:
1014415-7223	$282.828	$282,828

Executive Summary:

The position of Community Development Engineer was vacated on January 6, 2023. To fulfill the duties of the vacant position, the village has contracted with Christopher Burke Engineering (CBBEL) which has supplied a Professional Engineer. This individual has been instrumental in providing guidance to the Engineering Division, offering technical assistance to the Project Review Group, and supporting other staff. Additionally, Christopher Burke Engineering has been designated as the Village Engineer for Community Development.

The initial short-term plan was to employ the engineering consultant on a part-time basis, three days per week, to manage the Engineering Division while the Village recruited a permanent replacement. Unfortunately, the recruitment process for this position was not successful and the village paused recruitment and utilized CBBEL for FY 25 and FY 26. Staff is now proposing to extend the use of the consultant for FY 27. It is important to note that no funds are currently allocated in the FY 27 budget for filling the vacant supervisory position due to the on-going shortage in the market for experienced Civil Engineers.

This memo requests the committee's consideration of a contract extension with CBBEL for professional services for FY 27. The total amount requested for the contract extension is $282,828, which represents no increase from the FY 26 budget. This request reflects the ongoing efforts to optimize costs while maintaining essential services. CBBEL is requesting an increase in the hourly rate from $185/hour to $200/hour. This increase is reasonable when compared with industry rates. The engineer that provides staffing for this position does take some time off; therefore, this increase will still allow the village to stay within the proposed budget amount and maintain an average of 28 hours per week for these services.

In addition to the services outlined in this contract, the village also utilizes CBBEL for engineering plan review. These plan review costs are paid by the applicants through escrow funds collected from the

applicants. While the majority of engineering plan review utilizes this model, the Interim Community Development Engineer performs some minor plan review such as smaller projects or revisions. While those costs are not directly passed through to the applicant, they are offset by permit fees collected. The primary functions of the Interim Engineer are oversight over the division, including supervising employees, project inspection coordination and oversight, and monitoring and overseeing Customer Service Requests. Permit fees were increased in spring 2024 to provide additional cost recovery.

Recommended Action:

The Village Manager recommends the Planning, Building, and Development Committee recommend the Village Board approve a contract with Christopher Burke Engineering of Rosemont, IL for Interim Engineering Services in an amount not to exceed $282,828 pending approval of the FY 26/27 budget.

ATTACHMENTS:

- Contract
- Resolution

VILLAGE OF SCHAUMBURG
PROFESSIONAL SERVICES AGREEMENT FOR

Interim Community Development Engineer and North Schaumburg TIF Project Manager

THIS AGREEMENT is dated as of the 29th day of April, 2026 (***"Agreement"***) and is by and between the **VILLAGE OF SCHAUMBURG**, an Illinois municipal corporation (***"Village"***) and the Consultant identified in Subsection 1A below.

IN CONSIDERATION OF the recitals and the mutual covenants and agreements set forth in the Agreement, and pursuant to the Village's statutory powers, the parties agree as follows:

SECTION 1. CONSULTANT.

A. Engagement of Consultant. The Village desires to engage the Consultant identified below to provide all necessary professional consulting services and to perform the work in connection with the project identified below:

Consultant Firm Name: Christopher B. Burke Engineering, Ltd.
Street Address: 9575 W. Higgins Road, Suite 600
City, State, Zip: Rosemont, IL 60018
Telephone: 847-823-0500
Email: dlynch@cbbel.com

B. Project Description.
Providing interim engineering services for the Department of Community Development.

C. Representations of Consultant. The Consultant has submitted to the Village a description of the services to be provided by the Consultant, a copy of which is attached as Exhibit 1 to this Agreement (***"Services"***). The Consultant represents that it is financially solvent, has the necessary financial resources, and is sufficiently experienced and competent to perform and complete the professional consulting services set forth in Exhibit 1 in a manner consistent with the standards of professional practice by recognized consulting firms providing services of a similar nature.

D. Agreement Amount. The total amount billed by the Consultant for the Services under this Agreement shall not exceed $282,828 at a maximum rate of $200/hour as outlined in Exhibit 1, including reimbursable expenses as identified in Exhibit 1, unless amended pursuant to Subsection 8A of this Agreement.

SECTION 2. SCOPE OF SERVICES.

A. Retention of the Consultant. The Village retains the Consultant to perform, and the Consultant agrees to perform, the Services.

B. Services. The Consultant shall provide the Services pursuant to the terms and conditions of this Agreement.

C. Commencement; Time of Performance. The Consultant shall commence the Services immediately upon receipt of written notice from the Village that this Agreement has been fully executed by the Parties or on the date specified in Exhibit 1 (the ***"Commencement Date"***). The Consultant shall diligently and continuously prosecute the Services until the completion of the Services.

D. Reporting. The Consultant shall regularly report to the Village, regarding the progress of the Services during the term of this Agreement.

SECTION 3. COMPENSATION AND METHOD OF PAYMENT.

A. Agreement Amount. The total amount billed for the Proposal during the term of this Agreement shall not exceed the amount identified as the Agreement Amount in Subsection 1D of this Agreement, without the prior express written authorization of the Village.

B. Invoices and Payment. The Consultant shall be paid as provided in Exhibit 1. The Consultant shall submit invoices to the Village in an approved format for those portions of the Services performed and completed by the Consultant. The amount billed in any such invoice shall be based on the method of payment set forth in Exhibit 1. The Village shall pay to the Consultant the amount billed within 30 days after its receipt and approval of such an invoice.

C. Records. The Consultant shall maintain records showing actual time devoted and costs incurred, and shall permit the authorized representative of the Village to inspect and audit all data and records of the Consultant for work done under the Agreement. The records shall be made available to the Village at reasonable times during the Agreement period, and for three years after the termination of the Agreement.

D. Claim In Addition To Agreement Amount. If the Consultant wishes to make a claim for additional compensation as a result of action taken by the Village, the Consultant shall provide written notice to the Village of such claim within 7 days after occurrence of such action as provided by Subsection 8D of this Agreement, and no claim for additional compensation shall be valid unless made in accordance with this Subsection. Any changes in the Agreement Amount shall be valid only upon written amendment pursuant to Subsection 8A of this Agreement. Regardless of the decision of the Village relative to a claim submitted by the Consultant, the Consultant shall proceed with all of the Services required to complete the Services under this Agreement as determined by the Village without interruption.

E. Taxes, Benefits and Royalties. The Agreement Amount includes all applicable federal, state, and local taxes of every kind and nature applicable to the Services as well as all taxes, contributions, and premiums for unemployment insurance, old age or retirement benefits, pensions, annuities, or similar benefits and all costs, royalties and fees arising from the use on, or the incorporation into, the Services, of patented or copyrighted equipment, materials, supplies, tools, appliances, devices, processes, or inventions. All claim or right to claim additional compensation by reason of the payment of any such tax, contribution, premium, costs, royalties, or fees is hereby waived and released by Consultant.

F. Final Acceptance. The Services, or, if the Services are to be performed in separate phases, each phase of the Services, shall be considered complete on the date of final written acceptance by the Village of the Services or each phase of the Services, as the case may be, which acceptance shall not be unreasonably withheld or delayed.

SECTION 4. PERSONNEL; SUBCONTRACTORS.

A. Key Project Personnel. The Key Project Personnel identified in Exhibit 1 shall be primarily responsible for carrying out the Services on behalf of the Consultant. The Key Project Personnel shall not be changed without the Village's prior written approval.

B. Availability of Personnel. The Consultant shall provide all personnel necessary to complete the Services including, without limitation, any Key Project Personnel identified in this Agreement. The Consultant shall notify the Village as soon as practicable prior to terminating the employment of, reassigning, or receiving notice of the resignation of, any Key Project Personnel. The Consultant shall have no claim for damages and shall not bill the Village for additional time and materials charges as the result of any portion of the Services which must be duplicated or redone due to such termination or for any delay or extension of the Time of Performance as a result of any such termination, reassigning, or resignation.

C. Approval and Use of Subcontractors. The Consultant shall perform the Services with its own personnel and under the management, supervision, and control of its own organization unless otherwise approved by the Village in writing. All subcontractors and subcontracts used by the Consultant shall be acceptable to, and approved in advance by, the Village. The Village's approval of any subcontractor or subcontract shall not relieve the Consultant of full responsibility and liability for the provision, performance, and completion of the Services as required by the Agreement. All Services performed under any subcontract shall be subject to all of the provisions of this Agreement in the same manner as if performed by employees of the Consultant. For purposes of this Agreement, the term "Consultant" shall be deemed also to refer to all subcontractors of the Consultant, and every subcontract shall include a provision binding the subcontractor to all provisions of this Agreement.

D. Removal of Personnel and Subcontractors. If any personnel or subcontractor fails to perform the Services in a manner satisfactory to the Village, the Consultant shall immediately upon notice from the Village remove and replace such personnel or subcontractor. The Consultant shall have no claim for damages, for compensation in excess of the amount contained in this Agreement or for a delay or extension of the Time of Performance as a result of any such removal or replacement.

SECTION 5. CONFIDENTIAL INFORMATION.

A. Confidential Information. The term ***"Confidential Information"*** shall mean information designated as "Confidential" in the possession or under the control of the Village relating to the technical, business or corporate affairs of the Village; Village property; user information, including, without limitation, any information pertaining to usage of the Village's computer system, including and without limitation, any information obtained from server logs or other records of electronic or machine readable form; and the existence of, and terms and conditions of, this Agreement. Village Confidential Information shall not include information that can be demonstrated: (i) to have been rightfully in the possession of the Consultant from a source other than the Village prior to the time of disclosure of said information to the Consultant under this Agreement (***"Time of Disclosure"***); (ii) to have been in the public domain prior to the Time of Disclosure; (iii) to have become part of the public domain after the Time of Disclosure by a publication or by any other means except an unauthorized act or omission or breach of this Agreement on the part of the Consultant or the Village; or (iv) to have been supplied to the Consultant after the Time of Disclosure without restriction by a third party who is under no obligation to the Village to maintain such information in confidence.

B. No Disclosure of Confidential Information by the Consultant. The Consultant acknowledges that it shall, in performing the Services for the Village under this Agreement, have access to or be directly or indirectly exposed to Confidential Information. The Consultant shall hold confidential all Confidential Information and shall not disclose or use such Confidential Information without express prior written consent of the Village unless required to perform the Services set forth in this Agreement. The Consultant shall be permitted to disclose Confidential Information as necessary to its subcontractors to fulfill the obligations required by this Agreement. The Consultant shall use reasonable measures at least as strict as those the Consultant uses to protect its own confidential information. Such measures shall include, without limitation, requiring subcontractors of the Consultant to execute a non-disclosure agreement before obtaining access to Confidential Information.

SECTION 6. STANDARD OF CARE; INDEMNIFICATION; INSURANCE.

A. Standard of Care. The Consultant warrants that the Services shall be performed in accordance with the standards of professional practice, care, and diligence practiced by recognized consulting firms in performing services of a similar nature in the same locale in existence at the time of performance of this Agreement. The standard of care expressed shall be in addition to any other representations expressed in the Agreement, or expressed or implied by law, which are hereby reserved unto the Village.

B. Indemnification. The Consultant shall, without regard to the availability or unavailability of any insurance either of the Village or the Consultant, indemnify and save harmless, the Village, its officials, and its employees, against any and all damages, liabilities, losses, and expenses, including reasonable attorneys' fees and administrative expenses recoverable under applicable law, to the extent arising, out of or caused by, the Consultant's negligent or wrongful acts or omissions in the performance of, or failure to perform, the Services or any part thereof, except to the extent caused by the negligence of the Village.

C. Insurance. Contemporaneous with the Consultant's execution of this Agreement, the Consultant shall provide certificates of insurance and upon request, policies of insurance, all with coverages and limits acceptable to the Village, and evidencing at least the minimum insurance coverages and limits as set forth in Exhibit 2 to this Agreement. But in no event shall any work begin without an insurance certificate or policy having been provided and approved by the Village. Such certificates shall be from companies with a general rating of A and a financial size category of Class X or better, in Best's Insurance Guide. Such certificates of insurance shall provide that no insurer change, modification in, or cancellation of any insurance shall become effective until the expiration of 30 days after written notice thereof shall have been given to the Village. The Consultant shall, at all times during the term of this Agreement, maintain and keep in force, at the Consultant's expense, the insurance coverages provided above, including without limitation at all times to meet the Standard of Care requirements of Subsection 6(A) of this section.

D. No Personal Liability. No elected or appointed official or employee of the Village shall be personally liable, in law or in contract, to the Consultant as the result of the execution of this Agreement. Likewise, no claims or suits shall be made against the employees of the Consultant as a result of the execution of this Agreement.

SECTION 7. CONSULTANT AGREEMENT GENERAL PROVISIONS.

A. Relationship of the Parties. The Consultant shall act as an independent contractor in providing and performing the Services. Nothing, in or done pursuant to this Agreement, shall be construed (i) to create the relationship of principal and agent, employer and employee, partners, or joint ventures between the Village and Consultant; or (ii) to create any relationship between the Village and any subcontractor of the Consultant.

B. Conflict of Interest. The Consultant represents and certifies that, to the best of its knowledge, (1) no Village employee or agent is interested in the business of the Consultant or this Agreement; (2) as of the date of this Agreement neither the Consultant nor any person employed or associated with the Consultant has any interest that would conflict in any manner or degree with the performance of the obligations under this Agreement; and (3) neither the Consultant nor any person employed by or associated with the Consultant shall at any time during the term of this Agreement obtain or acquire any interest that would conflict in any manner or degree with the performance of the obligations under this Agreement.

C. No Collusion. The Consultant represents and certifies that the Consultant is not barred from contracting with a unit of state or local government as a result of (i) a delinquency in the payment of any tax administered by the Illinois Department of Revenue unless the Consultant is contesting, in accordance with the procedures established by the appropriate revenue act, its liability for the tax or the amount of the tax, as set forth in Section 11-42.1-1 *et seq.* of the Illinois Municipal Code, 65 ILCS 5/11-42.1-1 *et seq.*; or (ii) a violation of either Section 33E-3 or Section 33E-4 of Article 33E of the Criminal Code, 720 ILCS 5/33E-1 *et seq.* The Consultant represents that the only persons, firms, or corporations interested in this Agreement as principals are those disclosed to the Village prior to the execution of this Agreement, and that this Agreement is made without collusion with any other person, firm, or corporation. If at any time it shall be found that the Consultant has, in procuring this Agreement, colluded with any other person, firm, or corporation, then the Consultant shall be liable to the Village for all loss or damage that the Village may suffer, and this Agreement shall, at the Village's option, be null and void.

D. Sexual Harassment Policy. The Consultant certifies that it has a written sexual harassment policy in full compliance with Section 2-105(A) (4) of the Illinois Human Rights Act, 775 ILCS 5/2-105(A) (4).

E. Patriot Act Compliance. The Consultant represents and warrants to the *Village* that neither it nor any of its principals, shareholders, members, partners, or affiliates, as applicable, is a person or entity named as a Specially Designated National and Blocked Person (as defined in Presidential Executive Order 13224) and that it is not acting, directly or indirectly, for or on behalf of a Specially Designated National and Blocked Person. The Consultant further represents and warrants to the Village that the Consultant and its principals, shareholders, members, partners, or affiliates, as applicable, are not, directly or indirectly, engaged in, and are not facilitating, the transactions contemplated by this Agreement on behalf of any person or entity named as a Specially Designated National and Blocked Person. The Consultant hereby agrees to defend, indemnify and hold harmless the Village, its corporate authorities, and all Village elected or appointed officials, officers, employees, agents, representatives, engineers, and attorneys, from and against any and all claims, damages, losses, risks, liabilities, and expenses (including reasonable attorneys' fees and costs) arising from or related to any breach of the representations and warranties in this subsection.

F. Termination. Notwithstanding any other provision hereof, the Village may terminate this Agreement at any time upon 15 days prior written notice to the Consultant. In the event that this Agreement is so terminated, the Consultant shall be paid for Services actually performed and reimbursable expenses actually incurred, if any, prior to termination, not exceeding the value of the Services completed as determined as provided in Exhibit 1. The Consultant may also terminate the Agreement in the event the Village fails to make payment for services rendered, but only after the Consultant has provided written notice to the Village of the lack of payment and allowed the Village 30 days to make payment or contest the payment or amount.

G. Term. The time of performance of this Agreement, unless terminated pursuant to the terms of this Agreement, shall expire on the date the Village determines that all of the Services under this Agreement are completed or upon final payment to Consultant. A determination of completion shall not constitute a waiver of any rights or claims which the Village may have or thereafter acquire with respect to any breach hereof by the Consultant or any right of indemnification of the Village by the Consultant.

H. Compliance with Laws and Grants. Consultant shall give all notices, pay all fees, and take all other action that may be necessary to ensure that the Services are provided, performed, and completed in accordance with all required governmental permits, licenses, or other approvals and authorizations that may be required in connection with providing, performing, and completing the Services, and with all applicable building and zoning statutes, ordinances, rules, and regulations, and the Fair Labor Standards Act; any statutes regarding qualification to do business; any statutes prohibiting discrimination because of, or requiring affirmative action based on, race, creed, color, national origin, age, sex, or other prohibited classification, including, without limitation, the Americans with Disabilities Act of 1990, 42 U.S.C. §§ 12101 *et seq*., and the Illinois Human Rights Act, 775 ILCS 5/1-101 *et seq*. Consultant shall also comply with all conditions of any federal, state, or local grant received by Village and made known to the Consultant with respect to this Agreement or the Services.

Consultant shall be solely liable for any fines or civil penalties that are imposed by any governmental or quasi-governmental agency or body that may arise, or be alleged to have arisen, out of or in connection with Consultant's, or its subcontractors', performance of, or failure to perform, the Services or any part thereof.

I. Default. If it should appear at any time that the Consultant has failed or refused to prosecute, or has delayed in the prosecution of, the Services with diligence at a rate that permits completion of the Services in full compliance with the requirements of this Agreement, or has otherwise failed, refused, or delayed to perform or satisfy the Services or any other material requirement of this Agreement (***"Event of Default"***), and fails to cure any such Event of Default within ten business days after the Consultant's receipt of written notice of such Event of Default from the Village, then the Village shall have the right, without prejudice to any other remedies provided by law or equity, to pursue any one or more of the following remedies:

1. Cure by Consultant. The Village may require the Consultant, within a reasonable time, to complete or correct all or any part of the Services that are the subject of the Event of Default; and to take any or all other action necessary to bring the Consultant and the Services into compliance with this Agreement.

2. Termination of Agreement by Village. The Village may terminate this Agreement without liability for further payment of amounts due or to become due under this Agreement.

3. Withholding of Payment by Village. The Village may withhold from any payment, whether or not previously approved, or may recover from the Consultant, any and all costs, including attorneys' fees and administrative expenses, incurred by the Village as the result of any Event of Default by the Consultant or as a result of reasonable actions taken by the Village in response to any Event of Default by the Consultant.

J. No Additional Obligation. The Parties acknowledge and agree that the Village is under no obligation under this Agreement or otherwise to negotiate or enter into any other or additional contracts or agreements with the Consultant or with any vendor solicited or recommended by the Consultant.

K. Village Board Authority. Notwithstanding any provision of this Agreement, any negotiations or agreements with, or representations by the Consultant to vendors shall be subject to the approval of the Village Board of Trustees. The Village shall not be liable to any vendor or other third party for any agreements made by the Consultant, purportedly on behalf of the Village, without the knowledge and approval of the Village Trustees.

L. Mutual Cooperation. The Village agrees to cooperate with the Consultant in the performance of the Services, including meeting with the Consultant and providing the Consultant with such non-confidential information that the Village may have that may be relevant and helpful to the Consultant's performance of the Services. The Consultant agrees to cooperate with the Village in the performance of the Services to complete the work and with any other consultants engaged by the Village.

M. News Releases. The Consultant shall not issue any news releases or other public statements regarding the Services without prior approval from the Village

N. Ownership. Designs, drawings, plans, specifications, photos, reports, information, observations, calculations, notes, and any other documents, data, or information, in any form, prepared, collected, or received by the Consultant in connection with any or all of the Services to be performed under this Agreement (***"Documents"***) shall be and remain the exclusive property of the Village. At the Village's request, or upon termination of this Agreement, the Consultant shall cause the Documents to be promptly delivered to the Village upon payment of all sums due and owing Consultant under the Agreement. Any reuse of Documents other than for the purposes of this Agreement shall be at Village risk and Consultant shall not be liable for any reuse of the Documents.

O. GIS Data. ***[NOTE: Use this only if applicable]*** The Village has developed digital map information through Geographic Information Systems Technology (***"GIS Data"***) concerning the real property located within the Village. If requested to do so by the Consultant, the Village agrees to supply the Consultant with a digital copy of the GIS Data, subject to the following conditions:

1. Limited Access to GIS Data. The GIS Data provided by the Village shall be limited to the scope of the Services that the Consultant is to provide for the Village;

2. Purpose of GIS Data. The Consultant shall limit its use of the GIS Data to its intended purpose of furtherance of the Services; and

3. Agreement with Respect to GIS Data. The Consultant does hereby acknowledge and agree that:

a. **Trade Secrets of the Village.** The GIS Data constitutes proprietary materials and trade secrets of the Village and, shall remain the property of the Village;

b. **Consent of Village Required.** The Consultant will not provide or make available the GIS Data in any form to anyone without the prior written consent of the Village;

c. **Supply to Village.** At the request of the Village, the Consultant shall supply the Village with any and all information that may have been developed by the Consultant based on the GIS Data;

d. **No Guarantee of Accuracy.** The Village makes no guarantee as to the accuracy, completeness, or suitability of the GIS Data in regard to the Consultant's intended use thereof; and

e. **Discontinuation of Use.** At such time as the Services have been completed to the satisfaction of the Village, the Consultant shall cease its use of the GIS Data for any purpose whatsoever; and, upon request, an authorized representative of the Village shall be afforded sufficient access to the Consultant's premises and data processing equipment to verify that all use of the GIS Data has been discontinued.

SECTION 8. GENERAL PROVISIONS.

A. Amendment. No amendment or modification to this Agreement shall be effective unless and until such amendment or modification is in writing, properly approved in accordance with applicable procedures, and executed.

B. Assignment. This Agreement may not be assigned by the Village or by the Consultant without the prior written consent of the other party.

C. Binding Effect. The terms of this Agreement shall bind and inure to the benefit of the Parties hereto and their agents, successors, and assigns.

D. Notice. Any notice or communication required or permitted to be given under this Agreement shall be in writing and shall be delivered (i) personally, (ii) by a reputable overnight courier, (iii) by certified mail, return receipt requested, and deposited in the U.S. Mail, postage prepaid, (iv) by facsimile, or (v) by electronic internet mail ("e-mail"). Facsimile notices shall be deemed valid only to the extent that they are (a) actually received by the individual to whom addressed and (b) followed by delivery of actual notice in the manner described in either (i), (ii), or (iii) above within three business days thereafter at the appropriate address set forth below. E-mail notices shall be deemed valid and received by the addressee thereof when delivered by e-mail and (a) opened by the recipient on a business day at the address set forth below, and (b) followed by delivery of actual notice in the manner described in either (i), (ii) or (iii) above within three business days thereafter at the appropriate address set forth below. Unless otherwise expressly provided in this Agreement, notices shall be deemed received upon the earlier of (a) actual receipt; (b) one business day after deposit with an overnight courier as evidenced by a receipt of deposit; or (c) three business days following deposit in the U.S. mail, as evidenced by a return receipt. By notice complying with the requirements of this Subsection, each Party shall have the right to change the address or the addressee, or both, for all future notices and communications to such party, but no notice of a change of addressee or address shall be effective until actually received.

Notices and communications to the Village shall be addressed to, and delivered at, the following address:

Village of Schaumburg
101 Schaumburg Court
Schaumburg, IL 60193
Attention: Ryan Franklin – rfranklin@schaumburg.com

Notices and communications to the Consultant shall be addressed to, and delivered at, the following address:

Consultant Firm Name: Christopher B. Burke Engineering, Ltd.
Street Address: 9575 W. Higgins Road, Suite 600
City, State, Zip: Rosemont, IL 60018
Telephone: 847-823-0500
Email: dlynch@cbbel.com

E. Third Party Beneficiary. No claim as a third party beneficiary under this Agreement by any person, firm, or corporation other than the Consultant shall be made or be valid against the Village.

F. Provisions Severable. If any term, covenant, condition, or provision of this Agreement is held by a court of competent jurisdiction to be invalid, void, or unenforceable, the remainder of the provisions shall remain in full force and effect and shall in no way be affected, impaired or invalidated.

G. Time. Time is of the essence in the performance of this Agreement.

H. Governing Laws. This Agreement shall be interpreted according to the laws of the State of Illinois.

I. Entire Agreement. This Agreement constitutes the entire agreement between the parties and supersedes any and all previous or contemporaneous oral or written agreements and negotiations between the Village and the Consultant with respect to the Proposal and the Services.

J. Waiver. No waiver of any provision of this Agreement shall be deemed to or constitute a waiver of any other provision of this Agreement (whether or not similar) nor shall any such waiver be deemed to or constitute a continuing waiver unless otherwise expressly provided in this Agreement.

K. Exhibit. Exhibits 1 and 2, are attached hereto, and by this reference incorporated in and made a part of this Agreement. In the event of a conflict between the Exhibit and the text of this Agreement, the text of this Agreement shall control.

L. Rights Cumulative. Unless expressly provided to the contrary in this Agreement, each and every one of the rights, remedies, and benefits provided by this Agreement shall be cumulative and shall not be exclusive of any other such rights, remedies, and benefits allowed by law.

M. Counterpart Execution. This Agreement may be executed in several counterparts, each of which, when executed, shall be deemed to be an original, but all of which together shall constitute one and the same instrument.

[SIGNATURES FOLLOW]

VILLAGE OF SCHAUMBURG

By:_____
Village Manager

ATTEST:

By:_____
Village Clerk

CONSULTANT

By:_____

TITLE:_____

ATTEST:

By: _____

TITLE: _____

EXHIBIT 1

SERVICES

Services will be provided by Christopher B. Burke Engineering on an hourly basis. These services will include but not be limited to the following:

- Responsible for supervision, guidance and assistance to the employees within the Community Development Engineering Work Group (two FT inspectors and an engineering coordinator).
- Participation in the Project Review Group multi-department development review process; evaluating development proposals to ensure compliance with applicable codes and ordinances. Participation in weekly Project Review Group (PRG) meetings every Tuesday in the Village Hall.
- Performs the review and processing of development and subdivision proposals, Land Development Permits, Metropolitan Water Reclamation District Watershed Management Ordinance (WMO) permits, Cook County Highway Department permits, and the Illinois Environmental Protection Agency (IEPA) permits, to ensure compliance with Village regulations, plans and standards.
- Review and interpretation of engineering site work plans to determine if they meet all regulatory codes and ordinances and providing written comments to other technical staff within the Community Development Department.
- Responds to written technical requests and phone calls for information related to existing developments, or proposed developments that are coming through the formal village development review process.
- Assist the Engineering Technician with technical questions or assistance during the village permit and plan review process.
- Other responsibilities as assigned within the Community Development Department.
- The Community Development Engineer shall have work hours at the Community Development Department up to 28 hours per week with the ability to be at Village Hall 3 days per week and can be adjusted if necessary. The actual schedule shall be determined by the Assistant Director of Community Development depending upon workload and department demands. The 28 hour per week upper limit will not be exceeded without the consent of the Assistant Director of Community Development.

EXHIBIT 2

INSURANCE COVERAGES

A. Worker's Compensation and Employer's Liability with limits not less than:

(1) Worker's Compensation: Statutory;

(2) Employer's Liability:

$500,000 injury-per occurrence

$500,000 disease-per employee

$500,000 disease-policy limit

Such insurance shall evidence that coverage applies in the State of Illinois.

B. Comprehensive Motor Vehicle Liability with a combined single limit of liability for bodily injury and property damage of not less than $1,000,000 for vehicles owned, non-owned, borrowed or rented.

All employees shall be included as insureds.

C. Comprehensive General Liability with coverage written on an "occurrence" basis and with limits no less than:

$1,000,000 Bodily Injury and Property Damage $2,000,000 Aggregate

Coverages shall include:

- Broad Form Property Damage Endorsement
- Broad Form Contractual Liability (must expressly cover the indemnity provisions of the Contract)

D. Umbrella Policy or Excess liability Insurance with a limit of liability of not less than $2,000,000.

The required coverages may be in any combination of primary, excess, and umbrella policies. Any excess or umbrella policy must provide excess coverage over underlying insurance, except professional liability, on a following-form basis such that when any loss covered by the primary policy exceeds the limits under the primary policy, the excess or umbrella policy becomes effective to cover such loss.

E. Professional Liability Insurance. With a limit of liability of not less than $1,000,000 per claim/$2,000,000 in the aggregate and covering Consultant against all sums that Consultant may be obligated to pay on account of any liability arising out deviation from the professional standard of care set forth in the Agreement. If the policy is a claims made policy, it shall remain in effect for 5 years after the work has been completed.

F. Village as Additional Insured. Village shall be named as an Additional Insured on all policies except for:

Worker's Compensation

Professional Liability

Each such additional Insured endorsement shall identify Village as follows: Village of Schaumburg, including its Board members and elected and appointed officials, its officers, and employees.

G. Other Parties as Additional Insureds. In addition to Village, the following parties shall be named as additional insured on the following policies:

Additional Insured	Policy or Policies
_____	_____
_____	_____

The Consultant will provide certificates of insurance evidencing the types and limits of insurance specified. The certificates of insurance will specifically address each of the requirements noted. All insurance noted is primary and in no event will be considered contributory to any insurance purchased by the Village.

The same full insurance coverage provided to the named insured, whether it is the Consultant or a sub-contractor, shall be provided to the Village without any limitations or endorsements that might limit or exclude coverage.

Any and all deductibles or other forms of retention are the responsibility of the Consultant. All deductibles or other forms of retention are subject to the approval of the Village. Consultant will disclose to the Village in writing the amounts of any deductible or self-insured retentions on the insurance required under this contract.

Consultant waives any right of subrogation it may have or later acquire against the Village.

The Consultant shall not allow any subcontractor to commence work on their subcontract until the same insurance has been obtained by the subcontractor. The Consultant and their subcontractor(s) shall maintain all insurance required for not less than one (1) year after completion of this contract except professional liability which shall be for 5 years.

RESOLUTION NO R-26-_____

RESOLUTION AUTHORIZING THE VILLAGE MANAGER TO EXECUTE A PROFESSIONAL SERVICES AGREEMENT WITH CHRISTOPHER BURKE ENGINEERING, LTD. TO PROVIDE INTERIM STAFFING FOR THE POSITION OF COMMUNITY DEVELOPMENT ENGINEER

WHEREAS, the President and Board of Trustees wish to extend a Professional Services Agreement with Christopher Burke Engineering, Ltd., of Rosemont, Illinois, for providing interim staffing for the position of Community Development Engineer at an hourly rate not to exceed $185.00 and an amount not to exceed $282,828; and

WHEREAS, the consultant has submitted a proposal to perform work per the Village specifications; and

WHEREAS, it would be in the best interests of the citizens of Schaumburg to execute the attached Professional Services Agreement (Exhibit "A").

NOW, THEREFORE, BE IT RESOLVED BY THE PRESIDENT AND BOARD OF TRUSTEES OF THE VILLAGE OF SCHAUMBURG:

SECTION ONE: That the Village Manager be and hereby is authorized and directed to execute the attached Professional Services Agreement (Exhibit "A") by and between the Village of Schaumburg and Christopher Burke Engineering Ltd., of Rosemont, Illinois.

SECTION TWO: That the Village Manager be and hereby is authorized to sign any documents in furtherance of this Resolution.

SECTION THREE: That this Resolution shall be in full force and effect after passage and approval as required by law.

AYES:

NAYS:

ABSENT:

PASSED AND APPROVED this _____ day of _____, 2026.

_____
Village President

ATTEST:

_____
Village Clerk

VILLAGE OF SCHAUMBURG

AGENDA ITEM SUMMARY

Recommendation to Authorize the Village Manager to Execute a One-Year Extension to the Contract with TPI Building Code Consultants, Inc. for Building Inspection and Plan Review Services
04/14/26
Village Board

Presenter: Ryan Franklin, Assistant Director, Community Development
Lead Department: Community Development

Account(s):	Budget:	Expense Request:
1014415-7223	$839,597	$839,597

Executive Summary:

Community Development utilizes a third party for Inspection and Plan review services to supplement our building staff on an as-needed basis to perform daily building inspections, plan reviews, and office staff support. TPI Building Code Consultants, Inc. (TPI) has successfully provided the most competitive cost for services since 2016 and consistently maintains quality ICC certified staff to support the village. Their primary inspection tasks include answering calls in the morning to narrow down inspection windows, conducting inspections and utilizing our permitting software to document the results. Their primary plan review tasks involve reviewing plans, providing a comment letter and marking up any denied plans. TPI also provides inspection staff for special projects, which in the past have included hotel and auto licensing ordinance requirements. Lastly, TPI provides a property maintenance inspector who assists with CSRs.

In May 2024, following a competitive RFP process, a new contract was awarded to perform these services from June 1, 2024, to April 30, 2025. The contract approval included two, one-year extension options. Staff is recommending approval of the second contract extension from May 1, 2026 – April 30, 2027. Staff believes that TPI Building Code Consultants, Inc will continue to perform services with equal quality into the next one-year period. By continuing with TPI, the village can provide consistency and uninterrupted service to the residents and businesses.

The proposed FY27 budget includes $366,597 for plan review and $473,000 for inspections, resulting in a total of $839,597. This represents consistency with the FY26 budget. TPI has requested a 3% increase in the hourly rate provided for inspections. This would result in a $14,190 additional expense for inspections if the same number and type of inspections are provided. Staff believes the moderate increase is reasonable and will work within the approved budget to monitor expenses.

Staff reported to PBD on the expense status for outsourcing these services in February 2026. Staff estimates that the FY26 expenses will exceed the budget by 8% ($67,167). With village staffing changes, including recent hiring of a fire plans examiner, staff will continue to monitor workload distribution between in-house staff and outsourcing to responsibly manage expenses.

Staff will continue to look for opportunities to reduce outsourcing if staff remains stable or workload decreases. Staff has identified plan review as an area for reduction in outsourcing; however, some staffing changes are anticipated within the division (with plan review and inspections) with two employees having indicated some possible retirement plans in the upcoming year. These vacancies may create the need for additional backup from the third party contractor. For this reason, staff recommends maintaining the current budget amount for FY27.

Staff will continue to monitor workload and inspection/plan review demand, as well as look to identify efficiencies that could reduce expenses. Staff will prepare a bi-annual report on these efforts for presentation to PBD in September.

Recommended Action:

The Village Manager recommends the Planning, Building, and Development committee recommend the Village Board authorize the Village Manager to execute a one-year contract extension with TPI Building Code Consultants, Inc. of South Elgin, IL, for building inspection and plan review services in an amount not to exceed the approved FY 27 budget and approve the required resolution.

ATTACHMENTS:

- Contract Extension
- Resolution

VILLAGE OF SCHAUMBURG
PROGRESS THROUGH THOUGHTFUL PLANNING

TPI Building Consultants, Inc.
325 Spruce Street
South Elgin, IL 60177

April 29, 2026

RE: Professional Services Extension

Dear J Tisinai,

This Letter is to confirm your renewal of the professional services contract with the Village of Schaumburg for Inspection and Plan Review Services per terms written into the original specification. Additionally, the hourly rates for inspection services will be increased 3% and all other rates will remain consistent with the original specifications.

If you agree, please sign below, and return this acknowledgement back to the Village. Thank you for your prompt attention to this matter.

Sincerely,
Village of Schaumburg

Brian Townsend

Village Manager

Attachment: Independent Contractors Agreement

CONTRACT RENEWAL ACKNOWLEDGEMENT

Renew the previous Professional Services Agreement with the Village of Schaumburg dated May, 28th 2024 for the total payment amount not to exceed $839,597 for the fiscal year 2026-2027 which includes Inspection, Plan Review and Property Maintenance fees.

Signed: _____

Date: _____

Brian Townsend
Village Manager

RESOLUTION NO R-26-___

A RESOLUTION AUTHORIZING THE RENEWAL OF A PROFESSIONAL SERVICES AGREEMENT WITH T.P.I. BUILDING CODE CONSULTANTS, INC. TO PERFORM BUILDING INSPECTIONAND PLAN REVIEW SERVICES

WHEREAS, the President and Board of Trustees of the Village of Schaumburg (the "Village") previously entered into a professional services agreement with T.P.I. Building Code Consultants, Inc., of South Elgin, Illinois ("T.P.I") for providing building inspection and plan review services for the period of June 12, 2024 through April 30, 2025 with two, one-year extension options in subsequent fiscal years by agreement of all parties; and

WHEREAS, the Village and T.P.I. would like to extend the Village's contract with T.P.I. to perform these services for the term of May 1, 2026 through April 30, 2027, at a cost not to exceed $839,597; and

WHEREAS, it would be in the best interests of the citizens of Schaumburg to execute the attached Contract Renewal Acknowledgment (Exhibit "A").

NOW, THEREFORE, BE IT RESOLVED BY THE PRESIDENT AND BOARD OF TRUSTEES OF THE VILLAGE OF SCHAUMBURG:

SECTION ONE: That the Village Manager and the Village Clerk be and hereby are authorized and directed to execute the attached Contract Renewal Acknowledgement (Exhibit "A") by and between the Village of Schaumburg and T.P.I. Building Code Consultants, Inc of South Elgin, Illinois.

SECTION TWO: That the Village Manager is hereby authorized to sign any documents in furtherance of this Resolution.

SECTION THREE: That this Resolution shall be in full force and effect after passage and approval as required by law.

AYES:

NAYS:

ABSENT:

PASSED AND APPROVED this ____ day of _____, 2026.

_____

Village President

RESOLUTION NO R-26-___

A RESOLUTION AUTHORIZING THE RENEWAL OF A PROFESSIONAL SERVICES AGREEMENT WITH T.P.I. BUILDING CODE CONSULTANTS, INC. TO PERFORM BUILDING INSPECTIONAND PLAN REVIEW SERVICES

ATTEST:

_____

Village Clerk

VILLAGE OF SCHAUMBURG

AGENDA ITEM SUMMARY

Recommendation to Amend the Fee Schedule Pertaining to Building and Landscape Reinspection Fees
04/14/26
Village Board

Presenter: Parth Joshi, AICP, Planning Manager
Lead Department: Community Development

Executive Summary:

The Village utilizes third-party contract inspector to perform landscape inspections associated with land development permits (LDP). The contractor is responsible for reviewing the approved landscape plan, performing inspections, creating markup/punch list, coordinating results with staff and communicating results to the applicant. Currently, there are no limits on the number of landscape inspections an applicant can request. Staff is proposing a code amendment to include a landscape reinspection fee for third and subsequent inspections to be paid by the developer.

Similarly, the current fee schedule includes a reinspection fee of $57 for building inspections that may be charged at the discretion of the Building Official after the 2nd reinspection. The fee is to encourage applicants to correct noncompliant items before scheduling additional inspections. To be consistent and better reflect actual service costs, staff is also proposing to increase this fee to align with the proposed landscape reinspection fee.

Recommended Action:

Village Manager recommends the Planning, Building, and Development committee recommend the Village Board approve an amendment to the fee schedule pertaining to reinspection fees.

ATTACHMENTS:

- Memo
- Redline
- Ordinance

MEMORANDUM

Date: March 11, 2026

To: Village Manager

From: Parth Joshi, Planning Manager, AICP

Subject: Recommendation to Amend the Fee Schedule pertaining to reinspection fees

For: Planning Building and Development Committee

Introduction

The Village utilizes third-party contract inspector to perform landscape inspections associated with land development permits (LDP). The contractor is responsible for reviewing the approved landscape plan, performing inspections, creating markup/punch list, coordinating results with staff and communicating results to the applicant. Currently, there are no limits on the number of landscape inspections an applicant can request. Staff is proposing a code amendment to include a landscape reinspection fee for third and subsequent inspections to be paid by the developer.

Similarly, the current fee schedule includes a reinspection fee of $57 for building inspections that may be charged at the discretion of the Building Official after the 2nd reinspection. The fee is to encourage applicants to correct noncompliant items before scheduling additional inspections. To be consistent and better reflect actual service costs, staff is also proposing to increase this fee to align with the proposed landscape reinspection fee.

Discussion

Landscape Reinspections

The scope of work for landscaping associated with LDPs primarily includes installation of new plantings, typically for a new construction project. At times, LDP's are also issued for modifications of existing sites with an amended landscape plan. In the past year, there were several large-scale projects which required multiple inspections including but not limited to Lurie Children's Hospital, Duly healthcare, Element Rowhomes, Summit Grove, Verde Estates and Holiday Inn Express. The construction timeline of these projects typically spans multiple years. In many cases, the first and second inspections identified incomplete work, requiring additional trips by the contract inspector to perform a final inspection. These additional inspections increase administrative burden and contract costs.

To address the issue, staff is proposing to pass through costs associated with these additional inspections beyond the first two inspections. An inspection represents only a fraction of the resources expended. In addition to a physical inspection, the village could incur additional costs for creating markup/punch list, communications, and administrative documentation. The proposed fee would be a minimum of $100 for each subsequent landscape inspection after the 1st reinspection to be charged to the applicant. The third-party inspector documents and bills costs associated with each project. These would be passed along to the applicant. The proposed fee will

encourage applicants to ensure landscape work is ready prior to requesting inspection and help offset costs incurred by the Village for repeated site visits. Additionally, codifying the proposed fee into the Village's current fee schedule will provide staff with a legal mechanism to pass through the cost. Staff anticipate several high-profile and large-scale projects to be under construction and/or ready for final landscape inspections in the upcoming fiscal year 2027.

Building Reinspections

The Village currently has a $57 building reinspection fee that may be charged after the 2nd reinspection. To better align with actual costs and maintain consistency with the proposed landscape reinspection fee, staff is recommending increasing the building reinspection fee from $57 to $100 per inspection, for the third and each subsequent inspection**.** The proposed adjustment will also encourage applicants to ensure compliance prior to requesting inspections, improve cost recovery for inspection services and create consistency across inspection related fees.

Proposed Redline

Attached to your packets is the proposed redline exhibit. New language is shown in red.

Recommendation

Staff recommends the Planning, Building, and Development committee recommend the Village Board approve an amendment to the fee schedule pertaining to reinspection fees.

§ 41.01 VILLAGE FEE SCHEDULE.

It shall be unlawful for any person to engage in or operate any business, trade, or occupation named in this section without paying in advance the license or other fee listed below. Such fees upon collection shall become part of the corporate fund or such other fund as the village board shall determine. Any renewal fee which is not received on or before the due date shall be increased in the amount of fifty percent (50%) of the license fee hereinafter set forth, unless otherwise stated.

(A) General Fees:

(B) Community Development Fees and Permits:

Building fees:	
Reinspection fee:	
To be charged after the 2nd reinspection at the discretion of the building official	$~~57~~100.00 per inspection, as required

Permit Type	**Current Fees**
Engineering fees:	
Drainage improvements:	
Residential single-family only	$50.00
Fire Buffalo box lids	$0.00
Land development:	
Commercial/industrial/non-single-family: Fees based on 2% of the approved Engineer's Estimate of Probable Cost (EOPC)	$3,000.00 minimum
Reviews requiring outside consultant assistance will be billed directly at the outside consultant rate	
~~Reviews requiring outside consultant assistance will be billed directly at the outside consultant rate~~	
Reinspection fees:	
Landscape inspections to be charged after the 1st reinspection. All costs will be passed through for subsequent inspections directly at the discretion of the Director of Community Development	$100.00 minimum

PUBLICATION OF:

ORDINANCE NO. 26_____

AN ORDINANCE AMENDING TITLE 3, CHAPTER 41, SECTION 41.01 OF THE SCHAUMBURG VILLAGE CODE RELATIVE TO THE VILLAGE FEE SCHEDULE

ADOPTED:

PUBLISHED IN PAMPHLET FORM PURSUANT TO AUTHORIZATION AND DIRECTION OF THE PRESIDENT AND BOARD OF TRUSTEES OF THE VILLAGE OF SCHAUMBURG ON

409018_1
2078640_1

ORDINANCE NO. ____

AN ORDINANCE AMENDING TITLE 3, CHAPTER 41, SECTION 41.01 OF THE SCHAUMBURG VILLAGE CODE RELATIVE TO THE VILLAGE FEE SCHEDULE

WHEREAS, the Village of Schaumburg, as a home rule unit of local government as provided by Article VII, Section 6 of the Illinois Constitution of 1970, has the authority to exercise any power and perform any function pertaining to its government and affairs, except as limited by Article VII, Section 6 of the Illinois Constitution of 1970; and

WHEREAS, the Village of Schaumburg currently fee schedule to compensate the village for certain services, which requires updating from time to time; and

WHEREAS, the Village of Schaumburg finds it in the best interests of the Village to amend the Village Code relative to the same;

NOW, THEREFORE, BE IT ORDAINED BY THE PRESIDENT AND BOARD OF TRUSTEES OF THE VILLAGE OF SCHAUMBURG:

SECTION ONE: The recitals above shall be and are hereby incorporated in this Section 1 as if restated herein.

SECTION TWO: That Title 3 (Administration), Chapter 41 (Village Fee Schedule), Section 41.01(B) (Community Development Fees and Permits) is hereby amended, in part, as follows:

Building fees:	
Reinspection fee:	
To be charged after the 2nd reinspection at the discretion of the building official	~~$57~~100.00 per inspection, as required

Engineering fees:	
Drainage improvements:	
Residential single-family only	$50.00
Fire Buffalo box lids	$0.00
Land development:	
Commercial/industrial/non-single-family: Fees based on 2% of the approved Engineer's Estimate of Probable Cost (EOPC)	$3,000.00 minimum
Reviews requiring outside consultant assistance will be billed directly at the outside consultant rate	
~~Reviews requiring outside consultant assistance will be billed directly at the outside consultant rate~~	
Reinspection fees:	
Landscape inspections to be charged for the third and each subsequent inspection. Additional third-party inspection costs	$100.00 minimum

ORDINANCE NO. ____

AN ORDINANCE AMENDING TITLE 3, CHAPTER 41, SECTION 41.01 OF THE SCHAUMBURG VILLAGE CODE RELATIVE TO THE VILLAGE FEE SCHEDULE

will be passed through to the applicant at the discretion of the Director of Community Development	

SECTION THREE: This Ordinance shall be in full force and effect, after passage, approval and publication as required by law.

AYES:

NAYS:

ABSENT:

PASSED AND APPROVED this _____ day of _____, 2026.

_____
Village President

ATTEST:

_____
Village Clerk

VILLAGE OF SCHAUMBURG

AGENDA ITEM SUMMARY

Resolution No. R-26-_____A Resolution Authorizing the Village Manager to Execute a Professional Services Agreement with Christopher Burke Engineering, Ltd. to Provide Interim Staffing for the Position of Community Development Engineer.
04/14/26
Village Board

Presenter: Ryan Franklin, Assistant Director, Community Development
Lead Department: Community Development

Account(s):	Budget:	Expense Request:
1014415-7223	$282.828	$282,828

Executive Summary:

The position of Community Development Engineer was vacated on January 6, 2023. To fulfill the duties of the vacant position, the village has contracted with Christopher Burke Engineering (CBBEL) which has supplied a Professional Engineer. This individual has been instrumental in providing guidance to the Engineering Division, offering technical assistance to the Project Review Group, and supporting other staff. Additionally, Christopher Burke Engineering has been designated as the Village Engineer for Community Development.

The initial short-term plan was to employ the engineering consultant on a part-time basis, three days per week, to manage the Engineering Division while the Village recruited a permanent replacement. Unfortunately, the recruitment process for this position was not successful and the village paused recruitment and utilized CBBEL for FY 25 and FY 26. Staff is now proposing to extend the use of the consultant for FY 27. It is important to note that no funds are currently allocated in the FY 27 budget for filling the vacant supervisory position due to the on-going shortage in the market for experienced Civil Engineers.

This memo requests the committee's consideration of a contract extension with CBBEL for professional services for FY 27. The total amount requested for the contract extension is $282,828, which represents no increase from the FY 26 budget. This request reflects the ongoing efforts to optimize costs while maintaining essential services. CBBEL is requesting an increase in the hourly rate from $185/hour to $200/hour. This increase is reasonable when compared with industry rates. The engineer that provides staffing for this position does take some time off; therefore, this increase will still allow the village to stay within the proposed budget amount and maintain an average of 28 hours per week for these services.

In addition to the services outlined in this contract, the village also utilizes CBBEL for engineering plan

review. These plan review costs are paid by the applicants through escrow funds collected from the applicants. While the majority of engineering plan review utilizes this model, the Interim Community Development Engineer performs some minor plan review such as smaller projects or revisions. While those costs are not directly passed through to the applicant, they are offset by permit fees collected. The primary functions of the Interim Engineer are oversight over the division, including supervising employees, project inspection coordination and oversight, and monitoring and overseeing Customer Service Requests. Permit fees were increased in spring 2024 to provide additional cost recovery.

Recommended Action:

The Village Manager recommends the Planning, Building, and Development Committee recommend the Village Board approve a contract with Christopher Burke Engineering of Rosemont, IL for Interim Engineering Services in an amount not to exceed $282,828 pending approval of the FY 27 budget.

ATTACHMENTS:

- Contract
- Resolution

VILLAGE OF SCHAUMBURG
PROFESSIONAL SERVICES AGREEMENT FOR

Interim Community Development Engineer and North Schaumburg TIF Project Manager

THIS AGREEMENT is dated as of the 29th day of April, 2026 (***"Agreement"***) and is by and between the **VILLAGE OF SCHAUMBURG**, an Illinois municipal corporation (***"Village"***) and the Consultant identified in Subsection 1A below.

IN CONSIDERATION OF the recitals and the mutual covenants and agreements set forth in the Agreement, and pursuant to the Village's statutory powers, the parties agree as follows:

SECTION 1. CONSULTANT.

A. Engagement of Consultant. The Village desires to engage the Consultant identified below to provide all necessary professional consulting services and to perform the work in connection with the project identified below:

Consultant Firm Name: Christopher B. Burke Engineering, Ltd.
Street Address: 9575 W. Higgins Road, Suite 600
City, State, Zip: Rosemont, IL 60018
Telephone: 847-823-0500
Email: dlynch@cbbel.com

B. Project Description.
Providing interim engineering services for the Department of Community Development.

C. Representations of Consultant. The Consultant has submitted to the Village a description of the services to be provided by the Consultant, a copy of which is attached as Exhibit 1 to this Agreement (***"Services"***). The Consultant represents that it is financially solvent, has the necessary financial resources, and is sufficiently experienced and competent to perform and complete the professional consulting services set forth in Exhibit 1 in a manner consistent with the standards of professional practice by recognized consulting firms providing services of a similar nature.

D. Agreement Amount. The total amount billed by the Consultant for the Services under this Agreement shall not exceed $282,828 at a maximum rate of $200/hour as outlined in Exhibit 1, including reimbursable expenses as identified in Exhibit 1, unless amended pursuant to Subsection 8A of this Agreement.

SECTION 2. SCOPE OF SERVICES.

A. Retention of the Consultant. The Village retains the Consultant to perform, and the Consultant agrees to perform, the Services.

B. Services. The Consultant shall provide the Services pursuant to the terms and conditions of this Agreement.

C. Commencement; Time of Performance. The Consultant shall commence the Services immediately upon receipt of written notice from the Village that this Agreement has been fully executed by the Parties or on the date specified in Exhibit 1 (the ***"Commencement Date"***). The Consultant shall diligently and continuously prosecute the Services until the completion of the Services.

D. Reporting. The Consultant shall regularly report to the Village, regarding the progress of the Services during the term of this Agreement.

SECTION 3. COMPENSATION AND METHOD OF PAYMENT.

A. Agreement Amount. The total amount billed for the Proposal during the term of this Agreement shall not exceed the amount identified as the Agreement Amount in Subsection 1D of this Agreement, without the prior express written authorization of the Village.

B. Invoices and Payment. The Consultant shall be paid as provided in Exhibit 1. The Consultant shall submit invoices to the Village in an approved format for those portions of the Services performed and completed by the Consultant. The amount billed in any such invoice shall be based on the method of payment set forth in Exhibit 1. The Village shall pay to the Consultant the amount billed within 30 days after its receipt and approval of such an invoice.

C. Records. The Consultant shall maintain records showing actual time devoted and costs incurred, and shall permit the authorized representative of the Village to inspect and audit all data and records of the Consultant for work done under the Agreement. The records shall be made available to the Village at reasonable times during the Agreement period, and for three years after the termination of the Agreement.

D. Claim In Addition To Agreement Amount. If the Consultant wishes to make a claim for additional compensation as a result of action taken by the Village, the Consultant shall provide written notice to the Village of such claim within 7 days after occurrence of such action as provided by Subsection 8D of this Agreement, and no claim for additional compensation shall be valid unless made in accordance with this Subsection. Any changes in the Agreement Amount shall be valid only upon written amendment pursuant to Subsection 8A of this Agreement. Regardless of the decision of the Village relative to a claim submitted by the Consultant, the Consultant shall proceed with all of the Services required to complete the Services under this Agreement as determined by the Village without interruption.

E. Taxes, Benefits and Royalties. The Agreement Amount includes all applicable federal, state, and local taxes of every kind and nature applicable to the Services as well as all taxes, contributions, and premiums for unemployment insurance, old age or retirement benefits, pensions, annuities, or similar benefits and all costs, royalties and fees arising from the use on, or the incorporation into, the Services, of patented or copyrighted equipment, materials, supplies, tools, appliances, devices, processes, or inventions. All claim or right to claim additional compensation by reason of the payment of any such tax, contribution, premium, costs, royalties, or fees is hereby waived and released by Consultant.

F. Final Acceptance. The Services, or, if the Services are to be performed in separate phases, each phase of the Services, shall be considered complete on the date of final written acceptance by the Village of the Services or each phase of the Services, as the case may be, which acceptance shall not be unreasonably withheld or delayed.

SECTION 4. PERSONNEL; SUBCONTRACTORS.

A. Key Project Personnel. The Key Project Personnel identified in Exhibit 1 shall be primarily responsible for carrying out the Services on behalf of the Consultant. The Key Project Personnel shall not be changed without the Village's prior written approval.

B. Availability of Personnel. The Consultant shall provide all personnel necessary to complete the Services including, without limitation, any Key Project Personnel identified in this Agreement. The Consultant shall notify the Village as soon as practicable prior to terminating the employment of, reassigning, or receiving notice of the resignation of, any Key Project Personnel. The Consultant shall have no claim for damages and shall not bill the Village for additional time and materials charges as the result of any portion of the Services which must be duplicated or redone due to such termination or for any delay or extension of the Time of Performance as a result of any such termination, reassigning, or resignation.

C. Approval and Use of Subcontractors. The Consultant shall perform the Services with its own personnel and under the management, supervision, and control of its own organization unless otherwise approved by the Village in writing. All subcontractors and subcontracts used by the Consultant shall be acceptable to, and approved in advance by, the Village. The Village's approval of any subcontractor or subcontract shall not relieve the Consultant of full responsibility and liability for the provision, performance, and completion of the Services as required by the Agreement. All Services performed under any subcontract shall be subject to all of the provisions of this Agreement in the same manner as if performed by employees of the Consultant. For purposes of this Agreement, the term "Consultant" shall be deemed also to refer to all subcontractors of the Consultant, and every subcontract shall include a provision binding the subcontractor to all provisions of this Agreement.

D. Removal of Personnel and Subcontractors. If any personnel or subcontractor fails to perform the Services in a manner satisfactory to the Village, the Consultant shall immediately upon notice from the Village remove and replace such personnel or subcontractor. The Consultant shall have no claim for damages, for compensation in excess of the amount contained in this Agreement or for a delay or extension of the Time of Performance as a result of any such removal or replacement.

SECTION 5. CONFIDENTIAL INFORMATION.

A. Confidential Information. The term ***"Confidential Information"*** shall mean information designated as "Confidential" in the possession or under the control of the Village relating to the technical, business or corporate affairs of the Village; Village property; user information, including, without limitation, any information pertaining to usage of the Village's computer system, including and without limitation, any information obtained from server logs or other records of electronic or machine readable form; and the existence of, and terms and conditions of, this Agreement. Village Confidential Information shall not include information that can be demonstrated: (i) to have been rightfully in the possession of the Consultant from a source other than the Village prior to the time of disclosure of said information to the Consultant under this Agreement (***"Time of Disclosure"***); (ii) to have been in the public domain prior to the Time of Disclosure; (iii) to have become part of the public domain after the Time of Disclosure by a publication or by any other means except an unauthorized act or omission or breach of this Agreement on the part of the Consultant or the Village; or (iv) to have been supplied to the Consultant after the Time of Disclosure without restriction by a third party who is under no obligation to the Village to maintain such information in confidence.

B. No Disclosure of Confidential Information by the Consultant. The Consultant acknowledges that it shall, in performing the Services for the Village under this Agreement, have access to or be directly or indirectly exposed to Confidential Information. The Consultant shall hold confidential all Confidential Information and shall not disclose or use such Confidential Information without express prior written consent of the Village unless required to perform the Services set forth in this Agreement. The Consultant shall be permitted to disclose Confidential Information as necessary to its subcontractors to fulfill the obligations required by this Agreement. The Consultant shall use reasonable measures at least as strict as those the Consultant uses to protect its own confidential information. Such measures shall include, without limitation, requiring subcontractors of the Consultant to execute a non-disclosure agreement before obtaining access to Confidential Information.

SECTION 6. STANDARD OF CARE; INDEMNIFICATION; INSURANCE.

A. Standard of Care. The Consultant warrants that the Services shall be performed in accordance with the standards of professional practice, care, and diligence practiced by recognized consulting firms in performing services of a similar nature in the same locale in existence at the time of performance of this Agreement. The standard of care expressed shall be in addition to any other representations expressed in the Agreement, or expressed or implied by law, which are hereby reserved unto the Village.

B. Indemnification. The Consultant shall, without regard to the availability or unavailability of any insurance either of the Village or the Consultant, indemnify and save harmless, the Village, its officials, and its employees, against any and all damages, liabilities, losses, and expenses, including reasonable attorneys' fees and administrative expenses recoverable under applicable law, to the extent arising, out of or caused by, the Consultant's negligent or wrongful acts or omissions in the performance of, or failure to perform, the Services or any part thereof, except to the extent caused by the negligence of the Village.

C. Insurance. Contemporaneous with the Consultant's execution of this Agreement, the Consultant shall provide certificates of insurance and upon request, policies of insurance, all with coverages and limits acceptable to the Village, and evidencing at least the minimum insurance coverages and limits as set forth in Exhibit 2 to this Agreement. But in no event shall any work begin without an insurance certificate or policy having been provided and approved by the Village. Such certificates shall be from companies with a general rating of A and a financial size category of Class X or better, in Best's Insurance Guide. Such certificates of insurance shall provide that no insurer change, modification in, or cancellation of any insurance shall become effective until the expiration of 30 days after written notice thereof shall have been given to the Village. The Consultant shall, at all times during the term of this Agreement, maintain and keep in force, at the Consultant's expense, the insurance coverages provided above, including without limitation at all times to meet the Standard of Care requirements of Subsection 6(A) of this section.

D. No Personal Liability. No elected or appointed official or employee of the Village shall be personally liable, in law or in contract, to the Consultant as the result of the execution of this Agreement. Likewise, no claims or suits shall be made against the employees of the Consultant as a result of the execution of this Agreement.

SECTION 7. CONSULTANT AGREEMENT GENERAL PROVISIONS.

A. Relationship of the Parties. The Consultant shall act as an independent contractor in providing and performing the Services. Nothing, in or done pursuant to this Agreement, shall be construed (i) to create the relationship of principal and agent, employer and employee, partners, or joint ventures between the Village and Consultant; or (ii) to create any relationship between the Village and any subcontractor of the Consultant.

B. Conflict of Interest. The Consultant represents and certifies that, to the best of its knowledge, (1) no Village employee or agent is interested in the business of the Consultant or this Agreement; (2) as of the date of this Agreement neither the Consultant nor any person employed or associated with the Consultant has any interest that would conflict in any manner or degree with the performance of the obligations under this Agreement; and (3) neither the Consultant nor any person employed by or associated with the Consultant shall at any time during the term of this Agreement obtain or acquire any interest that would conflict in any manner or degree with the performance of the obligations under this Agreement.

C. No Collusion. The Consultant represents and certifies that the Consultant is not barred from contracting with a unit of state or local government as a result of (i) a delinquency in the payment of any tax administered by the Illinois Department of Revenue unless the Consultant is contesting, in accordance with the procedures established by the appropriate revenue act, its liability for the tax or the amount of the tax, as set forth in Section 11-42.1-1 *et seq.* of the Illinois Municipal Code, 65 ILCS 5/11-42.1-1 *et seq.*; or (ii) a violation of either Section 33E-3 or Section 33E-4 of Article 33E of the Criminal Code, 720 ILCS 5/33E-1 *et seq.* The Consultant represents that the only persons, firms, or corporations interested in this Agreement as principals are those disclosed to the Village prior to the execution of this Agreement, and that this Agreement is made without collusion with any other person, firm, or corporation. If at any time it shall be found that the Consultant has, in procuring this Agreement, colluded with any other person, firm, or corporation, then the Consultant shall be liable to the Village for all loss or damage that the Village may suffer, and this Agreement shall, at the Village's option, be null and void.

D. Sexual Harassment Policy. The Consultant certifies that it has a written sexual harassment policy in full compliance with Section 2-105(A) (4) of the Illinois Human Rights Act, 775 ILCS 5/2-105(A) (4).

E. Patriot Act Compliance. The Consultant represents and warrants to the *Village* that neither it nor any of its principals, shareholders, members, partners, or affiliates, as applicable, is a person or entity named as a Specially Designated National and Blocked Person (as defined in Presidential Executive Order 13224) and that it is not acting, directly or indirectly, for or on behalf of a Specially Designated National and Blocked Person. The Consultant further represents and warrants to the Village that the Consultant and its principals, shareholders, members, partners, or affiliates, as applicable, are not, directly or indirectly, engaged in, and are not facilitating, the transactions contemplated by this Agreement on behalf of any person or entity named as a Specially Designated National and Blocked Person. The Consultant hereby agrees to defend, indemnify and hold harmless the Village, its corporate authorities, and all Village elected or appointed officials, officers, employees, agents, representatives, engineers, and attorneys, from and against any and all claims, damages, losses, risks, liabilities, and expenses (including reasonable attorneys' fees and costs) arising from or related to any breach of the representations and warranties in this subsection.

F. Termination. Notwithstanding any other provision hereof, the Village may terminate this Agreement at any time upon 15 days prior written notice to the Consultant. In the event that this Agreement is so terminated, the Consultant shall be paid for Services actually performed and reimbursable expenses actually incurred, if any, prior to termination, not exceeding the value of the Services completed as determined as provided in Exhibit 1. The Consultant may also terminate the Agreement in the event the Village fails to make payment for services rendered, but only after the Consultant has provided written notice to the Village of the lack of payment and allowed the Village 30 days to make payment or contest the payment or amount.

G. Term. The time of performance of this Agreement, unless terminated pursuant to the terms of this Agreement, shall expire on the date the Village determines that all of the Services under this Agreement are completed or upon final payment to Consultant. A determination of completion shall not constitute a waiver of any rights or claims which the Village may have or thereafter acquire with respect to any breach hereof by the Consultant or any right of indemnification of the Village by the Consultant.

H. Compliance with Laws and Grants. Consultant shall give all notices, pay all fees, and take all other action that may be necessary to ensure that the Services are provided, performed, and completed in accordance with all required governmental permits, licenses, or other approvals and authorizations that may be required in connection with providing, performing, and completing the Services, and with all applicable building and zoning statutes, ordinances, rules, and regulations, and the Fair Labor Standards Act; any statutes regarding qualification to do business; any statutes prohibiting discrimination because of, or requiring affirmative action based on, race, creed, color, national origin, age, sex, or other prohibited classification, including, without limitation, the Americans with Disabilities Act of 1990, 42 U.S.C. §§ 12101 *et seq*., and the Illinois Human Rights Act, 775 ILCS 5/1-101 *et seq*. Consultant shall also comply with all conditions of any federal, state, or local grant received by Village and made known to the Consultant with respect to this Agreement or the Services.

Consultant shall be solely liable for any fines or civil penalties that are imposed by any governmental or quasi-governmental agency or body that may arise, or be alleged to have arisen, out of or in connection with Consultant's, or its subcontractors', performance of, or failure to perform, the Services or any part thereof.

I. Default. If it should appear at any time that the Consultant has failed or refused to prosecute, or has delayed in the prosecution of, the Services with diligence at a rate that permits completion of the Services in full compliance with the requirements of this Agreement, or has otherwise failed, refused, or delayed to perform or satisfy the Services or any other material requirement of this Agreement (***"Event of Default"***), and fails to cure any such Event of Default within ten business days after the Consultant's receipt of written notice of such Event of Default from the Village, then the Village shall have the right, without prejudice to any other remedies provided by law or equity, to pursue any one or more of the following remedies:

1. Cure by Consultant. The Village may require the Consultant, within a reasonable time, to complete or correct all or any part of the Services that are the subject of the Event of Default; and to take any or all other action necessary to bring the Consultant and the Services into compliance with this Agreement.

2. Termination of Agreement by Village. The Village may terminate this Agreement without liability for further payment of amounts due or to become due under this Agreement.

3. Withholding of Payment by Village. The Village may withhold from any payment, whether or not previously approved, or may recover from the Consultant, any and all costs, including attorneys' fees and administrative expenses, incurred by the Village as the result of any Event of Default by the Consultant or as a result of reasonable actions taken by the Village in response to any Event of Default by the Consultant.

J. No Additional Obligation. The Parties acknowledge and agree that the Village is under no obligation under this Agreement or otherwise to negotiate or enter into any other or additional contracts or agreements with the Consultant or with any vendor solicited or recommended by the Consultant.

K. Village Board Authority. Notwithstanding any provision of this Agreement, any negotiations or agreements with, or representations by the Consultant to vendors shall be subject to the approval of the Village Board of Trustees. The Village shall not be liable to any vendor or other third party for any agreements made by the Consultant, purportedly on behalf of the Village, without the knowledge and approval of the Village Trustees.

L. Mutual Cooperation. The Village agrees to cooperate with the Consultant in the performance of the Services, including meeting with the Consultant and providing the Consultant with such non-confidential information that the Village may have that may be relevant and helpful to the Consultant's performance of the Services. The Consultant agrees to cooperate with the Village in the performance of the Services to complete the work and with any other consultants engaged by the Village.

M. News Releases. The Consultant shall not issue any news releases or other public statements regarding the Services without prior approval from the Village

N. Ownership. Designs, drawings, plans, specifications, photos, reports, information, observations, calculations, notes, and any other documents, data, or information, in any form, prepared, collected, or received by the Consultant in connection with any or all of the Services to be performed under this Agreement (***"Documents"***) shall be and remain the exclusive property of the Village. At the Village's request, or upon termination of this Agreement, the Consultant shall cause the Documents to be promptly delivered to the Village upon payment of all sums due and owing Consultant under the Agreement. Any reuse of Documents other than for the purposes of this Agreement shall be at Village risk and Consultant shall not be liable for any reuse of the Documents.

O. GIS Data. ***[NOTE: Use this only if applicable]*** The Village has developed digital map information through Geographic Information Systems Technology (***"GIS Data"***) concerning the real property located within the Village. If requested to do so by the Consultant, the Village agrees to supply the Consultant with a digital copy of the GIS Data, subject to the following conditions:

1. Limited Access to GIS Data. The GIS Data provided by the Village shall be limited to the scope of the Services that the Consultant is to provide for the Village;

2. Purpose of GIS Data. The Consultant shall limit its use of the GIS Data to its intended purpose of furtherance of the Services; and

3. Agreement with Respect to GIS Data. The Consultant does hereby acknowledge and agree that:

a. **Trade Secrets of the Village.** The GIS Data constitutes proprietary materials and trade secrets of the Village and, shall remain the property of the Village;

b. **Consent of Village Required.** The Consultant will not provide or make available the GIS Data in any form to anyone without the prior written consent of the Village;

c. **Supply to Village.** At the request of the Village, the Consultant shall supply the Village with any and all information that may have been developed by the Consultant based on the GIS Data;

d. **No Guarantee of Accuracy.** The Village makes no guarantee as to the accuracy, completeness, or suitability of the GIS Data in regard to the Consultant's intended use thereof; and

e. **Discontinuation of Use.** At such time as the Services have been completed to the satisfaction of the Village, the Consultant shall cease its use of the GIS Data for any purpose whatsoever; and, upon request, an authorized representative of the Village shall be afforded sufficient access to the Consultant's premises and data processing equipment to verify that all use of the GIS Data has been discontinued.

SECTION 8. GENERAL PROVISIONS.

A. Amendment. No amendment or modification to this Agreement shall be effective unless and until such amendment or modification is in writing, properly approved in accordance with applicable procedures, and executed.

B. Assignment. This Agreement may not be assigned by the Village or by the Consultant without the prior written consent of the other party.

C. Binding Effect. The terms of this Agreement shall bind and inure to the benefit of the Parties hereto and their agents, successors, and assigns.

D. Notice. Any notice or communication required or permitted to be given under this Agreement shall be in writing and shall be delivered (i) personally, (ii) by a reputable overnight courier, (iii) by certified mail, return receipt requested, and deposited in the U.S. Mail, postage prepaid, (iv) by facsimile, or (v) by electronic internet mail ("e-mail"). Facsimile notices shall be deemed valid only to the extent that they are (a) actually received by the individual to whom addressed and (b) followed by delivery of actual notice in the manner described in either (i), (ii), or (iii) above within three business days thereafter at the appropriate address set forth below. E-mail notices shall be deemed valid and received by the addressee thereof when delivered by e-mail and (a) opened by the recipient on a business day at the address set forth below, and (b) followed by delivery of actual notice in the manner described in either (i), (ii) or (iii) above within three business days thereafter at the appropriate address set forth below. Unless otherwise expressly provided in this Agreement, notices shall be deemed received upon the earlier of (a) actual receipt; (b) one business day after deposit with an overnight courier as evidenced by a receipt of deposit; or (c) three business days following deposit in the U.S. mail, as evidenced by a return receipt. By notice complying with the requirements of this Subsection, each Party shall have the right to change the address or the addressee, or both, for all future notices and communications to such party, but no notice of a change of addressee or address shall be effective until actually received.

Notices and communications to the Village shall be addressed to, and delivered at, the following address:

Village of Schaumburg
101 Schaumburg Court
Schaumburg, IL 60193
Attention: Ryan Franklin – rfranklin@schaumburg.com

Notices and communications to the Consultant shall be addressed to, and delivered at, the following address:

Consultant Firm Name: Christopher B. Burke Engineering, Ltd.
Street Address: 9575 W. Higgins Road, Suite 600
City, State, Zip: Rosemont, IL 60018
Telephone: 847-823-0500
Email: dlynch@cbbel.com

E. Third Party Beneficiary. No claim as a third party beneficiary under this Agreement by any person, firm, or corporation other than the Consultant shall be made or be valid against the Village.

F. Provisions Severable. If any term, covenant, condition, or provision of this Agreement is held by a court of competent jurisdiction to be invalid, void, or unenforceable, the remainder of the provisions shall remain in full force and effect and shall in no way be affected, impaired or invalidated.

G. Time. Time is of the essence in the performance of this Agreement.

H. Governing Laws. This Agreement shall be interpreted according to the laws of the State of Illinois.

I. Entire Agreement. This Agreement constitutes the entire agreement between the parties and supersedes any and all previous or contemporaneous oral or written agreements and negotiations between the Village and the Consultant with respect to the Proposal and the Services.

J. Waiver. No waiver of any provision of this Agreement shall be deemed to or constitute a waiver of any other provision of this Agreement (whether or not similar) nor shall any such waiver be deemed to or constitute a continuing waiver unless otherwise expressly provided in this Agreement.

K. Exhibit. Exhibits 1 and 2, are attached hereto, and by this reference incorporated in and made a part of this Agreement. In the event of a conflict between the Exhibit and the text of this Agreement, the text of this Agreement shall control.

L. Rights Cumulative. Unless expressly provided to the contrary in this Agreement, each and every one of the rights, remedies, and benefits provided by this Agreement shall be cumulative and shall not be exclusive of any other such rights, remedies, and benefits allowed by law.

M. Counterpart Execution. This Agreement may be executed in several counterparts, each of which, when executed, shall be deemed to be an original, but all of which together shall constitute one and the same instrument.

[SIGNATURES FOLLOW]

VILLAGE OF SCHAUMBURG

By:_____
Village Manager

ATTEST:

By:_____
Village Clerk

CONSULTANT

By:_____

TITLE:_____

ATTEST:

By: _____

TITLE: _____

EXHIBIT 1

SERVICES

Services will be provided by Christopher B. Burke Engineering on an hourly basis. These services will include but not be limited to the following:

- Responsible for supervision, guidance and assistance to the employees within the Community Development Engineering Work Group (two FT inspectors and an engineering coordinator).
- Participation in the Project Review Group multi-department development review process; evaluating development proposals to ensure compliance with applicable codes and ordinances. Participation in weekly Project Review Group (PRG) meetings every Tuesday in the Village Hall.
- Performs the review and processing of development and subdivision proposals, Land Development Permits, Metropolitan Water Reclamation District Watershed Management Ordinance (WMO) permits, Cook County Highway Department permits, and the Illinois Environmental Protection Agency (IEPA) permits, to ensure compliance with Village regulations, plans and standards.
- Review and interpretation of engineering site work plans to determine if they meet all regulatory codes and ordinances and providing written comments to other technical staff within the Community Development Department.
- Responds to written technical requests and phone calls for information related to existing developments, or proposed developments that are coming through the formal village development review process.
- Assist the Engineering Technician with technical questions or assistance during the village permit and plan review process.
- Other responsibilities as assigned within the Community Development Department.
- The Community Development Engineer shall have work hours at the Community Development Department up to 28 hours per week with the ability to be at Village Hall 3 days per week and can be adjusted if necessary. The actual schedule shall be determined by the Assistant Director of Community Development depending upon workload and department demands. The 28 hour per week upper limit will not be exceeded without the consent of the Assistant Director of Community Development.

EXHIBIT 2

INSURANCE COVERAGES

A. Worker's Compensation and Employer's Liability with limits not less than:

(1) Worker's Compensation: Statutory;

(2) Employer's Liability:

$500,000 injury-per occurrence

$500,000 disease-per employee

$500,000 disease-policy limit

Such insurance shall evidence that coverage applies in the State of Illinois.

B. Comprehensive Motor Vehicle Liability with a combined single limit of liability for bodily injury and property damage of not less than $1,000,000 for vehicles owned, non-owned, borrowed or rented.

All employees shall be included as insureds.

C. Comprehensive General Liability with coverage written on an "occurrence" basis and with limits no less than:

$1,000,000 Bodily Injury and Property Damage $2,000,000 Aggregate

Coverages shall include:

- Broad Form Property Damage Endorsement
- Broad Form Contractual Liability (must expressly cover the indemnity provisions of the Contract)

D. Umbrella Policy or Excess liability Insurance with a limit of liability of not less than $2,000,000.

The required coverages may be in any combination of primary, excess, and umbrella policies. Any excess or umbrella policy must provide excess coverage over underlying insurance, except professional liability, on a following-form basis such that when any loss covered by the primary policy exceeds the limits under the primary policy, the excess or umbrella policy becomes effective to cover such loss.

E. Professional Liability Insurance. With a limit of liability of not less than $1,000,000 per claim/$2,000,000 in the aggregate and covering Consultant against all sums that Consultant may be obligated to pay on account of any liability arising out deviation from the professional standard of care set forth in the Agreement. If the policy is a claims made policy, it shall remain in effect for 5 years after the work has been completed.

F. Village as Additional Insured. Village shall be named as an Additional Insured on all policies except for:

Worker's Compensation

Professional Liability

Each such additional Insured endorsement shall identify Village as follows: Village of Schaumburg, including its Board members and elected and appointed officials, its officers, and employees.

G. Other Parties as Additional Insureds. In addition to Village, the following parties shall be named as additional insured on the following policies:

Additional Insured	Policy or Policies
_____	_____
_____	_____

The Consultant will provide certificates of insurance evidencing the types and limits of insurance specified. The certificates of insurance will specifically address each of the requirements noted. All insurance noted is primary and in no event will be considered contributory to any insurance purchased by the Village.

The same full insurance coverage provided to the named insured, whether it is the Consultant or a sub-contractor, shall be provided to the Village without any limitations or endorsements that might limit or exclude coverage.

Any and all deductibles or other forms of retention are the responsibility of the Consultant. All deductibles or other forms of retention are subject to the approval of the Village. Consultant will disclose to the Village in writing the amounts of any deductible or self-insured retentions on the insurance required under this contract.

Consultant waives any right of subrogation it may have or later acquire against the Village.

The Consultant shall not allow any subcontractor to commence work on their subcontract until the same insurance has been obtained by the subcontractor. The Consultant and their subcontractor(s) shall maintain all insurance required for not less than one (1) year after completion of this contract except professional liability which shall be for 5 years.

RESOLUTION NO R-26-_____

RESOLUTION AUTHORIZING THE VILLAGE MANAGER TO EXECUTE A PROFESSIONAL SERVICES AGREEMENT WITH CHRISTOPHER BURKE ENGINEERING, LTD. TO PROVIDE INTERIM STAFFING FOR THE POSITION OF COMMUNITY DEVELOPMENT ENGINEER

WHEREAS, the President and Board of Trustees wish to extend a Professional Services Agreement with Christopher Burke Engineering, Ltd., of Rosemont, Illinois, for providing interim staffing for the position of Community Development Engineer at an hourly rate not to exceed $185.00 and an amount not to exceed $282,828; and

WHEREAS, the consultant has submitted a proposal to perform work per the Village specifications; and

WHEREAS, it would be in the best interests of the citizens of Schaumburg to execute the attached Professional Services Agreement (Exhibit "A").

NOW, THEREFORE, BE IT RESOLVED BY THE PRESIDENT AND BOARD OF TRUSTEES OF THE VILLAGE OF SCHAUMBURG:

SECTION ONE: That the Village Manager be and hereby is authorized and directed to execute the attached Professional Services Agreement (Exhibit "A") by and between the Village of Schaumburg and Christopher Burke Engineering Ltd., of Rosemont, Illinois.

SECTION TWO: That the Village Manager be and hereby is authorized to sign any documents in furtherance of this Resolution.

SECTION THREE: That this Resolution shall be in full force and effect after passage and approval as required by law.

AYES:

NAYS:

ABSENT:

PASSED AND APPROVED this _____ day of _____, 2026.

_____
Village President

ATTEST:

_____
Village Clerk

VILLAGE OF SCHAUMBURG

AGENDA ITEM SUMMARY

Resolution No. R-26-_____A Resolution Authorizing the Renewal of a Professional Services Agreement with T.P.I. Building Code Consultants, Inc. to Perform Building Inspection and Plan Review Services.
04/14/26
Village Board

Presenter: Ryan Franklin, Assistant Director, Community Development
Lead Department: Community Development

Account(s):	Budget:	Expense Request:
1014415-7223	$839,597	$839,597

Executive Summary:

Community Development utilizes a third party for Inspection and Plan review services to supplement our building staff on an as-needed basis to perform daily building inspections, plan reviews, and office staff support. TPI Building Code Consultants, Inc. (TPI) has successfully provided the most competitive cost for services since 2016 and consistently maintains quality ICC certified staff to support the village. Their primary inspection tasks include answering calls in the morning to narrow down inspection windows, conducting inspections and utilizing our permitting software to document the results. Their primary plan review tasks involve reviewing plans, providing a comment letter and marking up any denied plans. TPI also provides inspection staff for special projects, which in the past have included hotel and auto licensing ordinance requirements. Lastly, TPI provides a property maintenance inspector who assists with CSRs.

In May 2024, following a competitive RFP process, a new contract was awarded to perform these services from June 1, 2024, to April 30, 2025. The contract approval included two, one-year extension options. Staff is recommending approval of the second contract extension from May 1, 2026 – April 30, 2027. Staff believes that TPI Building Code Consultants, Inc will continue to perform services with equal quality into the next one-year period. By continuing with TPI, the village can provide consistency and uninterrupted service to the residents and businesses.

The proposed FY27 budget includes $366,597 for plan review and $473,000 for inspections, resulting in a total of $839,597. This represents consistency with the FY26 budget. TPI has requested a 3% increase in the hourly rate provided for inspections. This would result in a $14,190 additional expense for inspections if the same number and type of inspections are provided. Staff believes the moderate increase is reasonable and will work within the approved budget to monitor expenses.

Staff reported to PBD on the expense status for outsourcing these services in February 2026. Staff estimates that the FY26 expenses will exceed the budget by 8% ($67,167). With village staffing changes, including recent hiring of a fire plans examiner, staff will continue to monitor workload distribution between in-house staff and outsourcing to responsibly manage expenses.

Staff will continue to look for opportunities to reduce outsourcing if staff remains stable or workload decreases. Staff has identified plan review as an area for reduction in outsourcing; however, some staffing changes are anticipated within the division (with plan review and inspections) with two employees having indicated some possible retirement plans in the upcoming year. These vacancies may create the need for additional backup from the third party contractor. For this reason, staff recommends maintaining the current budget amount for FY27.

Staff will continue to monitor workload and inspection/plan review demand, as well as look to identify efficiencies that could reduce expenses. Staff will prepare a bi-annual report on these efforts for presentation to PBD in September.

Recommended Action:

The Village Manager recommends the Planning, Building, and Development committee recommend the Village Board authorize the Village Manager to execute a one-year contract extension with TPI Building Code Consultants, Inc. of South Elgin, IL, for building inspection and plan review services in an amount not to exceed the approved FY 27 budget and approve the required resolution.

ATTACHMENTS:

- Contract Extension
- Resolution

VILLAGE OF SCHAUMBURG
PROGRESS THROUGH THOUGHTFUL PLANNING

TPI Building Consultants, Inc.
325 Spruce Street
South Elgin, IL 60177

April 29, 2026

RE: Professional Services Extension

Dear J Tisinai,

This Letter is to confirm your renewal of the professional services contract with the Village of Schaumburg for Inspection and Plan Review Services per terms written into the original specification. Additionally, the hourly rates for inspection services will be increased 3% and all other rates will remain consistent with the original specifications.

If you agree, please sign below, and return this acknowledgement back to the Village. Thank you for your prompt attention to this matter.

Sincerely,
Village of Schaumburg

Brian Townsend

Village Manager

Attachment: Independent Contractors Agreement

CONTRACT RENEWAL ACKNOWLEDGEMENT

Renew the previous Professional Services Agreement with the Village of Schaumburg dated May, 28th 2024 for the total payment amount not to exceed $839,597 for the fiscal year 2026-2027 which includes Inspection, Plan Review and Property Maintenance fees.

Signed: _____

Date: _____

Brian Townsend
Village Manager

RESOLUTION NO R-26-___

A RESOLUTION AUTHORIZING THE RENEWAL OF A PROFESSIONAL SERVICES AGREEMENT WITH T.P.I. BUILDING CODE CONSULTANTS, INC. TO PERFORM BUILDING INSPECTIONAND PLAN REVIEW SERVICES

WHEREAS, the President and Board of Trustees of the Village of Schaumburg (the "Village") previously entered into a professional services agreement with T.P.I. Building Code Consultants, Inc., of South Elgin, Illinois ("T.P.I") for providing building inspection and plan review services for the period of June 12, 2024 through April 30, 2025 with two, one-year extension options in subsequent fiscal years by agreement of all parties; and

WHEREAS, the Village and T.P.I. would like to extend the Village's contract with T.P.I. to perform these services for the term of May 1, 2026 through April 30, 2027, at a cost not to exceed $839,597; and

WHEREAS, it would be in the best interests of the citizens of Schaumburg to execute the attached Contract Renewal Acknowledgment (Exhibit "A").

NOW, THEREFORE, BE IT RESOLVED BY THE PRESIDENT AND BOARD OF TRUSTEES OF THE VILLAGE OF SCHAUMBURG:

SECTION ONE: That the Village Manager and the Village Clerk be and hereby are authorized and directed to execute the attached Contract Renewal Acknowledgement (Exhibit "A") by and between the Village of Schaumburg and T.P.I. Building Code Consultants, Inc of South Elgin, Illinois.

SECTION TWO: That the Village Manager is hereby authorized to sign any documents in furtherance of this Resolution.

SECTION THREE: That this Resolution shall be in full force and effect after passage and approval as required by law.

AYES:

NAYS:

ABSENT:

PASSED AND APPROVED this ____ day of _____, 2026.

_____

Village President

RESOLUTION NO R-26-___

A RESOLUTION AUTHORIZING THE RENEWAL OF A PROFESSIONAL SERVICES AGREEMENT WITH T.P.I. BUILDING CODE CONSULTANTS, INC. TO PERFORM BUILDING INSPECTIONAND PLAN REVIEW SERVICES

ATTEST:

_____

Village Clerk

VILLAGE OF SCHAUMBURG

AGENDA ITEM SUMMARY

Resolution No. R-26-_____A Resolution Authorizing the Execution of a Real Estate Purchase and Sale Agreement for the Acquisition of Property Located at 218 West Schaumburg Road, Schaumburg, Illinois.
04/14/26
Village Board

Presenter:

Lead Department: General Government

Executive Summary:

Recommended Action:

ATTACHMENTS:

- Resolution Approving PSA for 218 W. Schaumburg Road
- PSA for 218 W. Schaumburg Road

RESOLUTION NO. _____

A RESOLUTION AUTHORIZING THE EXECUTION OF A REAL ESTATE PURCHASE AND SALE AGREEMENT FOR THE ACQUISITION OF PROPERTY LOCATED AT 218 WEST SCHAUMBURG ROAD, SCHAUMBURG, ILLINOIS

WHEREAS, the Village of Schaumburg, Cook County, Illinois (the "Village"), is a home rule unit of government under Article VII, Section 6 of the Illinois Constitution; and

WHEREAS, the Village has considered its current and future municipal needs, including the need to acquire and assemble property for public purposes; and

WHEREAS, the Village Board finds and determines that it is necessary, advisable, and in the best interests of the Village to acquire certain real property commonly known as 218 W. Schaumburg Road, Schaumburg, Illinois (the "Property"), as legally described in Exhibit A attached hereto and made a part hereof; and

WHEREAS, the Property is to be acquired from Brenda K. Rogers-Connolly and Robert A. Biester, Jr. And Timothy S. Biester as Beneficiaries of The Land Trust Company as Successor to Oxford Bank & Trust Company Under Trust Number 760 Y/T/D 12-1-1999 ("Seller") pursuant to a Real Estate Purchase and Sale Agreement (the "Agreement") in substantially the form attached hereto as Exhibit B; and

WHEREAS, the Village Board has determined that entering into the Agreement and acquiring the Property serves a valid public purpose.

NOW, THEREFORE, BE IT RESOLVED BY THE PRESIDENT AND BOARD OF TRUSTEES OF THE VILLAGE OF SCHAUMBURG:

SECTION 1: The foregoing recitals are hereby incorporated into this Resolution as findings of the Village Board.

SECTION 2: The Village Manager is hereby authorized and directed to execute, and the Village Clerk is authorized to attest, the Real Estate Purchase and Sale Agreement for the acquisition of the Property, in substantially the form attached hereto as Exhibit B, with such minor modifications as are approved by the Village Manager in consultation with the Village Attorney.

SECTION 3: The Village Manager and Village Clerk are further authorized and directed to execute and attest, respectively, all closing documents and such other documents as may be necessary or convenient to complete the acquisition of the Property in accordance with the Agreement.

SECTION 4: This Resolution shall be in full force and effect from and after its passage and approval as provided by law.

AYES:

NAYS:
ABSENT:

PASSED AND APPROVED this _____day of _____, 2026.

_____
Village President

ATTEST:

_____
Village Clerk

Exhibit A

Legal Description

THAT PART OF THE WEST 1/2 OF THE NORTHWEST 1/4 OF SECTION 22, TOWNSHIP 41 NORTH, RANGE 10 EAST OF THE THIRD PRINCIPAL MERIDIAN, DESCRIBED AS FOLLOWS: BEGINNING AT THE SOUTHEAST CORNER OF THE WEST 1/2 OF THE NORTHWEST 1/4 OF SAID SECTION 22, THENCE WEST ALONG THE SOUTH LINE OF THE SAID NORTHWEST 1/4, A DISTANCE OF 271.20 FEET TO THE PLACE OF BEGINNING, THENCE WEST ALONG THE SOUTH LINE OF SAID NORTHWEST 1/4, SAID COURSE BEING A BEARING OF SOUTH 87 DEGREES, 51 MINUTES, 27 SECOND WEST, A DISTANCE OF 100.00 FEET; THENCE NORTH 5 DEGREES, 00 MINUTES, 00 SECONDS WEST, A DISTANCE OF 280.01 FEET; THENCE SOUTH 87 DEGREES, 12 MINUTES, 39 SECONDS EAST, A DISTANCE OF 170.43 FEET, THENCE SOUTH 11 DEGREES 36 MINUTES, 34 SECONDS WEST, A DISTANCE OF 272.05 FEET TO THE PLACE OF BEGINNING (EXCEPT THE SOUTH 50.00 FEET THEREOF).

Exhibit B

Real Estate Purchase and Sale Agreement

REAL ESTATE SALES CONTRACT

THIS CONTRACT ("Contract"), dated _____, 2026 ("Effective Date") is made between BRENDA K. ROGERS-CONNOLLY AND ROBERT A. BIESTER, JR. AND TIMOTHY S. BIESTER AS BENEFICIARIES OF THE LAND TRUST COMPANY AS SUCCESSOR TO OXFORD BANK & TRUST COMPANY UNDER TRUST NUMBER 760 Y/T/D 12-1-1999 (hereinafter referred to as "Seller") and VILLAGE OF SCHAUMBURG, an Illinois municipal corporation (hereinafter referred to as the "Buyer").

Seller and Buyer agree as follows:

1. **SALE.** Seller agrees to sell and Buyer agrees to purchase from Seller, under the terms and conditions set forth in this Contract, fee simple title to the real property located at 218 W. Schaumburg Road, Schaumburg, Cook County, Illinois 60194, as legally described on Exhibit "A" attached hereto and made a part hereof (the "Real Estate" or "Property").

a. Except as otherwise set forth in this Contract, the Seller shall sell the Real Estate in "AS-IS, WHERE-IS" condition, without any representations or warranties of any kind, express or implied, either oral or written, other than as specifically set forth herein, made by the Seller or any agent or representative of the Seller with respect to the physical, environmental or structural condition of the Real Estate, including but not limited to layout, square footage, zoning, use and occupancy restrictions, susceptibility to flooding or with respect to the existence or absence of toxic or hazardous materials, substances or wastes in, on, under or affecting the Real Estate, including the soil conditions and the groundwater. The Seller makes no warranty or representation whatsoever other than as specifically set forth herein and disclaims any implied warranty regarding the fitness for particular purpose, quality or merchantability of the Real Estate or any portion thereof.

b. Except as otherwise set forth in this Contract, the Buyer agrees to accept the Real Estate in "AS-IS, WHERE-IS" condition, including any environmental conditions associated with same, without any representations or warranties of any kind, express or implied, either oral or written, other than as specifically set forth herein, made by the Seller or any agent or representative of the Seller with respect to the physical, environmental or structural condition of the Real Estate, including but not limited to layout, square footage, zoning, use and occupancy restrictions, susceptibility to flooding or with respect to the existence or absence of toxic or hazardous materials, substances or wastes in, on, under or affecting the Real Estate, including the soil conditions and the groundwater. The Buyer understands that the Seller makes no warranty or representation whatsoever and disclaims any implied warranty regarding the fitness for particular purpose, quality or merchantability of the Real Estate or any portion thereof. Notwithstanding the foregoing, Seller shall have the right, prior to Closing, to remove any personal property, fixtures, and exterior siding located on or attached to the improvements on the Real Estate, and Buyer acknowledges and agrees that the Property shall be conveyed at Closing in its then-existing condition following such removal by Seller.

2. **PURCHASE PRICE.** The total purchase price (the "Purchase Price") to be paid by Buyer to Seller is FOUR HUNDRED THIRTY-FIVE THOUSAND AND NO/100 DOLLARS ($435,000.00), subject to the provisions set forth in this Contract. Provided that all conditions precedent to Buyer's obligations to close as set forth in this Contract ("Conditions Precedent") have been satisfied and fulfilled or

waived in writing by Buyer, the Purchase Price shall be paid to Seller at Closing (as hereinafter defined), plus or minus prorations and other adjustments required under this Contract, by wire transfer of funds.

3. EARNEST MONEY DEPOSIT. No earnest money deposit is required for this transaction.

4. CLOSING DATE. The purchase and sale transaction contemplated in this Contract shall be consummated at closing ("Closing") to take place at a Title Company to be mutually agreed upon, on or about June 1, 2026, unless extended or shortened by mutual agreement of the Parties. ("Closing Date").

5. POSSESSION. Possession of the Real Estate shall be delivered to Buyer at Closing, free and clear of any liens, mortgages, leases, licenses, occupants and tenants.

6. SELLER'S CLOSING DELIVERIES. At Closing (or such other times as may be specified below), Seller shall deliver or cause to be delivered to Buyer the following, in form and substance acceptable to Buyer:

a. **Deed.** A Warranty Deed, executed by Seller, in recordable form, conveying the Property to Buyer (or as Buyer otherwise directs pursuant to a right to do so), free and clear of all liens, claims and encumbrances.

b. **Seller's Affidavit/ALTA Statement.** A Seller's Affidavit and/or ALTA statement, in form and substance acceptable to the Title Company, to allow for the deletion of the pre-printed exceptions in the owner's Title Policy (as hereinafter defined).

~~c.~~ **Possession.** Sole and exclusive possession (and right of possession) to the Property, free and clear of all leases, licenses and tenancies.

d. **Title Policy.** The owner's title insurance policy ("Title Policy"), issued by the Title Company, dated as of the Closing Date, in the amount of the Purchase Price, with such endorsements and otherwise in accordance with the requirements of Section 8 below, with all exceptions, other than Permitted Exceptions, deleted or endorsed over as required hereunder.

e. **Closing Statement.** A closing statement conforming to the prorations and other relevant provisions of this Contract.

f. **Personal Undertaking.** A personal undertaking for gap coverage to effectuate a New York style closing.

g. **Entity Transfer Certificate.** Entity Transfer Certification confirming that Seller is a "United States Person" within the meaning of Section 1445 of the Internal Revenue Code of 1986, as amended.

h. **Transfer Stamps/Transfer Declarations**. Completed and signed transfer declarations for the State, County and Village, along with tax stamps from the Village of Schaumburg, if applicable, in the amount of the Purchase Price.

i. **Other.** Such other documents and instruments as may reasonably be required by Buyer, its counsel, its lender, or the Title Company, and which may be necessary to consummate this transaction and to otherwise effect the agreements of the parties hereto, not inconsistent with the terms of this Contract.

After Closing, Seller shall execute and deliver to Buyer such further documents and instruments as Seller and Buyer may agree, which Buyer shall reasonably request to effect this transaction and otherwise effect the agreements of the parties hereto (with this obligation specifically surviving Closing). The Closing shall be closed pursuant to a so called "NY style" deed and money escrow with the Title Company.

7. **SURVEY.** The Seller, at its cost, shall arrange for the preparation of a boundary survey of the Real Estate.

8. **TITLE INSURANCE.** Within ten (10) days of the Effective Date, Seller, at Seller's cost, shall furnish to Buyer a title commitment from Chicago Title Insurance Company ("Title Commitment") to issue an owner's title insurance policy, on the current Chicago Title Insurance Company form, in the amount of the Purchase Price covering the Effective Date setting forth the state of title to the Property and all exceptions and restrictions of record including deed restrictions, liens, easements and covenants. The Title Commitment shall require the issuance of extended coverage (also commonly referred to as later date title charge) over all standard printed exceptions, whether by endorsement or otherwise, at Seller's sole cost and expense. Among other things, the Title Commitment shall indicate that Seller is the sole owner of good and marketable title to the Property and is fully authorized to convey the Property, and it shall indicate the amount of any real estate taxes attributable to the Property. Along with the Title Commitment, the Title Company shall also furnish Buyer with copies of all documents affecting the Property reflected in the Title Commitment. In the event any exceptions appear in the Title Commitment or title documents other than the standard printed exceptions (which shall be modified in the Title Policy (as hereinafter defined) that are unacceptable to Buyer, then Buyer shall, on or before the date which is fifteen (15) days after the receipt by Buyer of the last of the Title Commitment, the Survey and copies of all recorded documents, notify Seller, in writing, of such fact. Any such exceptions not objected to by Buyer shall hereinafter be referred to as "Permitted Exceptions;" provided, however, that mortgage liens, judgment liens, mechanic's liens, tax liens and other liens of definite or ascertainable amounts which are capable of being cleared from title by the payment of a sum certain ("Monetary Liens") shall not be Permitted Exceptions under any circumstances, regardless of whether Buyer objects thereto in accordance herewith, and Monetary Liens shall be cleared from title at Closing by the payment or escrowing of sufficient funds to cause such exceptions to be removed from Buyer's title policy, such payments to be made by Seller. Any exceptions objected to by Buyer or raised by the Title Company subsequent to the date of Buyer's notice of objection for the first time, as well as any Monetary Liens shall hereinafter collectively be called "Unpermitted Exceptions." Seller shall give written notice to Buyer within fifteen (15) days of the date of such objection notice as to whether Seller will cure the Unpermitted Exceptions at or prior to Closing, and such undertaking to cure, if any, shall be a binding obligation of Seller under this Agreement. In the event Seller fails to cure an Unpermitted Exception at or prior to Closing, Buyer may terminate this Agreement or may elect to proceed to close hereunder and take a credit at Closing in the aggregate amount of any Monetary Liens.

9. **ESCROW CLOSING; CLOSING EXPENSES.** This transaction may be closed through an escrow closing

at the Title Company in accordance with the general provisions for such closings consistent with the terms of this Contract. Upon creation of such an escrow, anything in this Contract between the parties to the contrary notwithstanding, payment of the Purchase Price and delivery of the deed shall be made through the escrow.

Seller will pay the entire cost of the base Title Policy (with the cost of the extended coverage to be shared equally by the Seller and Buyer) in the amount of the Purchase Price and ½ of any escrow fees provided there is no lender and money financing for the Buyer ("Money Lender") which if there is money financing the Buyer shall be responsible for the entire escrow fees.

10. PRORATIONS. At Closing, the following adjustments and prorations shall be computed as of the Closing Date and the balance of the Purchase Price shall be adjusted to reflect such prorations. All prorations shall be based on a 366-day year, with the Seller having the day prior to the Closing Day.

a. **Real Estate Taxes.** General real estate taxes for 2024 and subsequent years, special assessments and all other public or governmental charges against the Property which are or may be payable on an annual basis (including charges, assessments, liens or encumbrances for sewer, water, drainage or other public improvements completed or commenced on or prior to the Closing Date) shall be adjusted and apportioned as of the Closing Date. If the exact amount of general real estate taxes is not known at Closing, the proration will be based on 110% of the most recent full year tax bill, and shall be conclusive, with no subsequent adjustment.

b. **Miscellaneous.** All other charges and fees customarily prorated and adjusted in similar transactions shall be prorated as of Closing Date. In the event that accurate prorations and other adjustments cannot be made at Closing because current bills or statements are not obtainable (as, for example, all water, sewer, gas and utility bills), the parties shall prorate on the best available information. Final readings and final billings for utilities shall be taken as of the date of Closing.

11. DEED. Seller shall convey fee simple title to the Property to Buyer, by a recordable Warranty Deed (the "Deed"), subject only to the Permitted Exceptions. Seller shall also execute and deliver, at Closing, any and all documents, in addition to the Deed, including an Affidavit of Title, Covenant and Warranty, Title Company documentation including, but not limited to, an ALTA Statement, Assignment and Assumption of Billboard Lease, GAP Undertaking or such other documents reasonably requested either by the Buyer or the Title Company to consummate the transaction contemplated herein and to vest fee simple title to the Property in Buyer subject only to the Permitted Exceptions and the issuance of the Buyer's Title Company owners title insurance policy. Buyer shall be responsible for the recording fee of the Deed.

12. COVENANTS, REPRESENTATIONS AND WARRANTIES OF SELLER. The Seller covenants, represents and warrants to the Buyer as to the following matters, each of which is so warranted to be true and correct as of the date of this Contract, and also to be true and correct as of the Closing Date:

a. **Title Matters.** Seller has good and marketable fee simple title to the Real Estate, all subject only to the unpaid real estate taxes due and owing and the Permitted Exceptions.

b. **Violations of Zoning and Other Laws.** Seller has received no notice, written or otherwise, from any governmental agency alleging any violations of any statute, ordinance, regulation or code.

c. **Pending and Threatened Litigation.** There are no pending or, to the best knowledge and belief of Seller, threatened matters of litigation, administrative action or examination, claim or demand whatsoever relating to the Real Estate.

d. **Eminent Domain, etc.** There is no pending or, to the best knowledge and belief of Seller, contemplated eminent domain, condemnation or other governmental taking of the Real Estate or any part thereof.

e. **Access to Real Estate, Easements and Utilities**. No fact or condition exists which would result in the termination or impairment of access to the Real Estate from adjoining public or private streets or ways or which could result in discontinuation of presently available or otherwise necessary sewer, water, electric, gas, telephone or other utilities or services.

f. **Assessments.** There are no public improvements in the nature of off-site improvements, or otherwise, which have been ordered to be made and/or which have not heretofore been assessed and, to the best knowledge and belief of Seller, there are no special or general assessments pending against or affecting the Real Estate.

g. **Authority of Signatories; No Breach of Other Agreements; etc.** The execution, delivery of and performance under this Contract is pursuant to authority validly and duly conferred upon Seller and the signatories hereto. The consummation of the transaction herein contemplated and the compliance by Seller with the terms of this Contract do not and will not conflict with or result in a breach of any of the terms or provisions of, or constitute a default under, any agreement, arrangement, understanding, accord, document or instruction by which Seller or the Real Estate is bound; and will not and does not, to the best knowledge and belief of Seller, constitute a violation of any applicable law, rule, regulation, judgment, order or decree of, or agreement with, any governmental instrumentality or court, domestic or foreign, to which Seller or the Real Estate are subject or bound.

h. **Executory Agreements.** As of the Closing Date, Seller shall not be a party to, and the Real Estate shall not be subject to, any contract or agreement of any kind whatsoever (including any service contracts), written or oral, formal or informal, with respect to the Real Estate, other than this Contract. Buyer shall not, by reason of entering into or closing under this Contract, become subject to or bound by any agreement, contract, lease, license, invoice, bill, undertaking or understanding which it shall not have previously agreed in writing to accept

i. **Mechanic's Liens.** All bills and invoices for labor and material of any kind relating to the Real Estate have been paid in full, and there are no mechanic's liens or other claims outstanding or available to any party in connection with the Real Estate.

j. **Governmental Obligations.** To the best knowledge of Seller, there are no unperformed

obligations relative to the Real Estate outstanding to any governmental or quasi-governmental body or authority.

k. **Flood Plain.** Seller represents and warrants that the Real Estate is not located in any flood plain or flood hazard area as designated by FEMA; however, Seller makes no other representations or warranties regarding flood plain designation or storm water management regulations enacted by any other local, county, state or federal government or regulatory agency that may apply to the Real Estate.

l. **Section 1445 Withholding.** Seller represents that it is not a "foreign person" as defined in Section 1445 of the Internal Revenue Code and is, therefore, exempt from the withholding requirements of said Section. Seller will furnish Buyer at closing with the Exemption Certificate set forth in said Section.

m. **No Condominium.** There has never been any documentation executed, recorded or transmitted and no other actions have been taken, by Seller or others, to establish all or any portion of the Real Estate as a condominium or cooperative property under any applicable law or ordinance.

n. **Environmental Matters.** Seller acknowledges that there is an underground fuel storage tank located on the Property, and Buyer acknowledges that it is aware of the presence of such underground fuel storage tank. Seller has not received any written notice from any applicable governmental authority relating to any violation (actual or alleged) of applicable Environmental Laws pertaining to the Property. The term “Hazardous Substances” means petroleum, including crude oil or any fraction thereof, natural gas, natural gas liquids, liquefied natural gas, or synthetic gas usable for fuel (or mixtures of natural gas or such synthetic gas), asbestos and asbestos containing materials, mold, formaldehyde, urea, polychlorinated biphenyls, radon and any other substance, material, waste, pollutant or contaminant listed, defined or otherwise identified as hazardous or toxic under any Environmental Laws. The term “Environmental Laws” will mean the Resource Conservation and Recovery Act, the Comprehensive Environmental Response Compensation and Liability Act, other federal laws or ordinances governing or regulating the environment or hazardous or toxic materials as in effect on the Effective Date, together with their respective implementing regulations and guidelines as of the Effective Date, and all state, regional, county, municipal and other local laws, regulations and ordinances that are equivalent or similar to the federal laws recited above or that purport to regulate hazardous or toxic substances.

13. DEFAULT AND CONDITIONS PRECEDENT TO CLOSING.

a. **Due Diligence Period.** Buyer shall have a period of sixty (60) days following the Effective Date (the “Due Diligence Period”) to conduct such inspections, investigations, tests and studies of the Real Estate as Buyer deems necessary or appropriate, including without limitation environmental investigations relating to the underground fuel tank located on the Property. Buyer may extend the Due Diligence Period for an additional thirty (30) days upon written notice to Seller if additional time is reasonably required to complete such investigations. In the event Buyer determines, in its sole discretion, that the results of its inspections or investigations are not satisfactory, Buyer may terminate this

Contract by written notice to Seller prior to expiration of the Due Diligence Period, in which event this Contract shall terminate and neither party shall have any further obligations hereunder except those which expressly survive termination.

b. **Buyer's Termination Rights; Default by Seller.** In the event of a default by Seller of any of its obligations under this Agreement, then Buyer shall provide Seller with written notice specifying in reasonable detail the nature of the alleged Seller default. If the alleged Seller default remains uncured by Seller within ten (10) days after its receipt of written notice, Buyer will be entitled either (i) to terminate this Agreement as Buyer's sole and exclusive remedies as a result thereof.

c. **Default by Buyer.** In the event Buyer defaults in its obligations to close the purchase of the Property, then Seller shall provide Buyer with written notice specifying in reasonable detail the nature of the alleged Buyer default. If the alleged Buyer default remains uncured by Buyer within ten (10) days after its receipt of written notice, then Seller's sole and exclusive remedy shall be to terminate this Contract, it being understood that Seller's actual damages in the event of such default are difficult to ascertain. Seller shall have no other remedy for any default by Buyer.

In all events, the obligations of Buyer to pay the Purchase Price and to close this transaction are contingent upon: (i) title to the Real Estate being shown to be good and marketable as required by this Contract; (ii) the conditions precedent to closing provided for in this Contract being satisfied or, for any non-fulfilled condition(s), a waiver by Buyer in writing; (iii) the representations and warranties of Seller contained herein being true and accurate or waived by Buyer in writing as of the Closing Date; and (iv) Seller having performed all of its covenants and otherwise having performed all of its obligations and fulfilled all of the conditions required of it in order to close.

14. BINDING EFFECT. This Contract shall inure to the benefit of and shall be binding upon the heirs, legatees, transferees, assigns, personal representatives, successor or future owners, agents, administrators, executors and/or successors in interest of any kind whatsoever of the parties hereto.

15. BROKERAGE. Buyer and Seller acknowledge that neither party is represented by a real estate agent or broker for this transaction, and therefore no commission fees shall be or are required to be paid.

16. NOTICES. All notices required to be delivered hereunder shall be in writing and shall be deemed sufficient if (a) personally delivered, (b) sent by facsimile, (c) sent by a nationally recognized overnight courier, (d) sent by certified mail, return receipt requested, postage prepaid and addressed to the parties to this Contract at the addresses set forth below or at such other addresses as may be designated in writing, or (e) sent by electronic means (email). Notices personally delivered and sent by overnight courier shall be deemed delivered on the date of receipt. Notices mailed by certified mail shall be deemed received on the date of receipt or refusal to accept delivery as evidenced by the return receipt. Notices served by facsimile machine or via email shall be deemed received on the actual date of receipt of the facsimile or the email. Either party may change its address for notice purposes by giving notice to that effect in the manner set forth herein, provided such change of address shall not be deemed received until actual receipt thereof by the addressee. Notices sent by or to Seller's attorney or Buyer's attorney shall

constitute effective notice hereunder.

If to Seller: BRENDA K. ROGERS-CONNOLLY AND ROBERT A. BIESTER, JR. AND TIMOTHY S. BIESTER AS BENEFICIARIES OF THE LAND TRUST COMPANY AS SUCCESSOR TO OXFORD BANK & TRUST COMPANY UNDER TRUST NUMBER 760 Y/T/D 12-1-1999 c/o Brenda Kay Rogers-Connolly 798 Duxbury Lane Bartlett, Illinois 60103	If to Buyer: Village of Schaumburg 1000 E. Woodfield Road Schaumburg, Illinois 60193 Attn: Village Manager
with a copy to: David R. Schlueter Attorney for Seller Law Offices of David R. Schlueter 401 W. Irving Park Road Itasca, Illinois 60143	with a copy to: Carmen P. Forte, Jr. Attorney for Buyer Klein, Thorpe & Jenkins, LTD. 900 Oakmont Lane, Suite #301 Westmont, Illinois 60559 Fax: 312-984-6444 cpforte@ktjlaw.com

17. **RIGHT OF WAIVER**. Each and every condition of the Closing, other than the Seller's duties at Closing, is intended for and is for the sole and exclusive benefit of Buyer. Accordingly, Buyer may at any time and from time to time waive each and any condition of Closing, without waiver of any other condition or prejudice to its rights hereunder. Such waiver by Buyer shall, unless otherwise herein provided, be in writing signed by Buyer and delivered to Seller.

18. **ASSIGNMENT.** Buyer shall have the right to assign or transfer Buyer's interest in this Contract without the prior written consent of Seller. Buyer shall deliver to Seller a copy of the fully executed assignment and assumption by Buyer, as assignor and the assignee.

19. **EXHIBITS.** True and correct copies of the below Exhibits are attached hereto and made a part of this Contract or are incorporated herein by reference and are identified as follows:

a. Exhibit "A" – Legal Description (attached)

20. **MISCELLANEOUS.**

a. Time is of the essence of this Contract.

b. Wherever, under the terms and provisions of this Contract, the time for performance falls upon a Saturday, Sunday or legal holiday, such time for performance shall be extended to the next business day.

c. This Contract may be executed in counterparts, each of which shall constitute an original,

but all together shall constitute one and the same Contract.

d. This Contract provides for the purchase and sale of real property located in the State of Illinois, and is to be performed within the State of Illinois. Accordingly, this Contract, and all questions of interpretation, construction and enforcement thereof, and all controversies hereunder, shall be governed by the applicable statutory and common law of the State of Illinois. The parties agree that, for the purpose of any litigation relative to this Contract and its enforcement, venue shall be in the Circuit Court of Cook County, Illinois and the parties consent to the in personam jurisdiction of said Court for any such action or proceeding.

e. The captions at the beginning of the several paragraphs, respectively, are for convenience in locating the context, but are not part of the context.

f. In the event any term or provision of this Contract shall be held illegal, invalid, unenforceable or inoperative as a matter of law, the remaining terms and provisions of this Contract shall not be affected thereby, but each such term and provision shall be valid and shall remain in full force and effect.

g. This Contract and the Exhibits attached hereto and made a part hereof embody the entire agreement between the parties with respect to the Real Estate and supersede any and all prior agreements and understandings, whether written or oral, and whether formal or informal. No extensions, changes, modifications or amendments to or of this Contract, of any kind whatsoever, shall be made or claimed by Seller or Buyer, and no notices of any extension, change, modification or amendment made or claimed by Seller or Buyer shall have any force or effect whatsoever unless the same shall be endorsed in writing and fully signed by Seller and Buyer.

h. Buyer and Seller agree to make all disclosures and do all things necessary to comply with the applicable provisions of the Real Estate Settlement Procedures Act of 1974, as amended. In the event that either party shall fail to make appropriate disclosures when asked, such failure shall be considered a breach on the part of said party.

i. The parties warrant and represent that the execution, delivery of and performance under this Contract is pursuant to authority, validly and duly conferred upon the parties and the signatories hereto.

j. In construing this Contract and/or determining the rights of the parties hereunder, no party shall be deemed to have drafted or created this Contract, or any portion thereof.

k. If the Buyer intends to acquire the Real Estate as part of Section 1031 Exchange of Investment Properties, then, upon request of the Buyer, the Seller, at no cost to itself and no assumption of liability, agrees to cooperate with the Buyer by signing the Section 1031 Exchange documents that are necessary to process this real estate transaction as a Section 1031 Exchange of Investment Properties.

21. EFFECTIVE DATE. This Contract shall be deemed dated and become effective on the date that the last signatory signs this Contract, which date shall be the date stated on the first page of this

Contract.

22. COVENANTS OF SELLER. Seller hereby covenants with Buyer as follows:

a. **Leases.** Seller may not execute any new lease affecting the Property, or any portion thereof prior to the Closing Date.

b. **New Contracts.** Seller shall not enter into any contract which will not be fully performed prior to Closing with respect to the Property, which will survive the Closing, or which would otherwise affect the use, operation or enjoyment of the Property after Closing, without Buyer's prior written consent. In addition, neither Seller nor any person or entity acting on Seller's behalf shall solicit, initiate, encourage, respond to, negotiate, or execute or enter into any contracts, letters of intent or other binding or non-binding agreements of any type whatsoever from third parties in connection with the possible sale of the Property, or any portion thereof.

c. **Pre-Closing Expenses.** Seller has paid or will pay in full, prior to Closing (i) all bills and invoices for labor, goods, material and services of any kind relating to the Property, for the period prior to Closing; and (ii) utility charges, relating to the period prior to Closing. Any alterations, installations, and other work required to be performed under any and all agreements affecting the Property have been or will, by the Closing, be completed and paid for in full.

d. **No Lien or Encumbrance.** After the Effective Date and prior to Closing, Seller shall not create any new liens or encumbrances over all or any part of the Property or any interest thereon.

e. **Change in Conditions.** Seller shall promptly notify Buyer of any material change in any condition with respect to the Property or of the occurrence of any material event or circumstance which makes any representation or warranty of Seller to Buyer under this Contract untrue or misleading, or any covenant of Seller under this Contract incapable or less likely of being performed, it being understood that Seller's obligation to provide notice to Buyer under this Section shall in no way relieve Seller of any liability for a breach by Seller of any of its representations, warranties or covenants under this Contract.

23. ADDITIONAL CONDITIONS PRECEDENT TO CLOSING. In addition to the other conditions enumerated in this Contract, the following shall be additional Conditions Precedent to Buyer's obligation to close hereunder:

a. **Physical Condition.** The physical condition of the Property shall be substantially the same on the Closing Date as on the Contract Date, except for the removal of personal property, fixtures, and exterior siding as permitted under Section 1(b) of this Contract.

b. **Zoning.** Prior to Closing, the zoning of the Property shall not have changed, except pursuant to applications approved by Buyer (in its sole and unfettered

discretion). Buyer acknowledges and agrees that any changes in zoning of the Property shall be conditioned on the Closing taking place.

24. Indemnity; Survival. IN NO EVENT SHALL EITHER PARTY EVER BE LIABLE FOR ANY CONSEQUENTIAL OR PUNITIVE DAMAGES.

IN WITNESS WHEREOF, the parties hereto have executed this Contract as of the date next to their respective signature.

BUYER:
Village of Schaumburg

By:_____

Name:_____

Title:_____

Executed by Buyer on_____

SELLER:
BRENDA K. ROGERS-CONNOLLY AND ROBERT A. BIESTER, JR. AND TIMOTHY S. BIESTER AS BENEFICIARIES OF THE LAND TRUST COMPANY AS SUCCESSOR TO OXFORD BANK & TRUST COMPANY UNDER TRUST NUMBER 760 Y/T/D 12-1-1999

By:_____

Name:_____

Title:_____

Executed by Seller on_____

EXHIBIT A

LEGAL DESCRIPTION OF 218 W. SCHAUMBURG ROAD
SCHAUMBURG, ILLINOIS

THAT PART OF THE WEST 1/2 OF THE NORTHWEST 1/4 OF SECTION 22, TOWNSHIP 41 NORTH, RANGE 10 EAST OF THE THIRD PRINCIPAL MERIDIAN, DESCRIBED AS FOLLOWS: BEGINNING AT THE SOUTHEAST CORNER OF THE WEST 1/2 OF THE NORTHWEST 1/4 OF SAID SECTION 22, THENCE WEST ALONG THE SOUTH LINE OF THE SAID NORTHWEST 1/4, A DISTANCE OF 271.20 FEET TO THE PLACE OF BEGINNING, THENCE WEST ALONG THE SOUTH LINE OF SAID NORTHWEST 1/4, SAID COURSE BEING A BEARING OF SOUTH 87 DEGREES, 51 MINUTES, 27 SECOND WEST, A DISTANCE OF 100.00 FEET; THENCE NORTH 5 DEGREES, 00 MINUTES, 00 SECONDS WEST, A DISTANCE OF 280.01 FEET; THENCE SOUTH 87 DEGREES, 12 MINUTES, 39 SECONDS EAST, A DISTANCE OF 170.43 FEET, THENCE SOUTH 11 DEGREES 36 MINUTES, 34 SECONDS WEST, A DISTANCE OF 272.05 FEET TO THE PLACE OF BEGINNING (EXCEPT THE SOUTH 50.00 FEET THEREOF).

VILLAGE OF
SCHAUMBURG

AGENDA ITEM SUMMARY

Resolution No. R-26-_____A Resolution to Utilize Motor Fuel Funds in Accordance with the Illinois Department of Transportation Resolution for Maintenance of Streets and Highways by Schaumburg Under the Illinois Highway Code (2026-2027) (Salt Conveyor).
04/14/26
Village Board

Presenter: Justin Briski, Superintendent of Field Services
Lead Department: Engineering and Public Works

Account(s):	Budget:	Expense Request:
2089010-7401 (26040-20-230)	$600,000	$598,524.86

The budget status for this request is: Under Budget

Amount Under Budget: $1,475.14

Executive Summary:

The Village issued the Invitation for Bid 2025-IFB-081 for the Salt Conveyor and Pit Replacement project, which includes the full removal and replacement of the existing conveyor system as well as the associated pit, hopper, and shed structures. The existing equipment has reached the end of its useful life, and replacement is necessary to maintain safe and efficient salt handling operations. Bids were opened on January 30, 2026, and the project is funded through Motor Fuel Tax (MFT) revenues.

Two bids were received and evaluated. Kimco USA Inc. submitted the lowest bid at $598,524.86, while Westmont Engineering submitted a bid of $714,118.00. Kimco's proposal included pricing of $290,772.93 for the conveyor removal and replacement and $307,751.93 for work associated with the pit, hopper, and shed. Kimco has successfully completed multiple municipal salt conveyor and pit replacement projects. Past municipal clients include Naperville, Libertyville, Des Plaines, Highland Park, and Will County.

This project will replace critical infrastructure needed to safely process, load, and store roadway salt, ensuring continued reliability for winter operations. Utilizing MFT funds provides an appropriate and eligible funding source for this type of improvement. Contract documents for Section 25-00156-00-MG, including the formal IDOT BLR 12320 agreement and all required supporting materials, have been prepared and executed for board approval.

Recommended Action:

The Village Manager recommends the Engineering and Public Works Committee recommend the Village Board award the bid for the Salt Conveyor Replacement Project to Kimco USA Inc. of Marshall, IL, for FY 26/27 in an amount not to exceed $598,524.86, and approve the required Resolution.

ATTACHMENTS:

- Bid Tab
- Bid Submittal
- Resolution
- IDOT Resolution
- Request for Expenditure/Authorization of MFT Funds
- Local Public Agency Formal Contract

VILLAGE OF SCHAUMBURG

Village of Schaumburg
Engineering and Public Works
Mike Hall, Department Director
Atcher Municipal Center, Schaumburg, IL 60193

EVALUATION TABULATION

IFB No. 2025-IFB-081

Salt Conveyor Replacement

RESPONSE DEADLINE: January 30, 2026 at 10:00 am
Report Generated: Monday, March 9, 2026

SELECTED VENDOR TOTALS

Vendor	Total
Kimco USA Inc	$598,524.86
Westmont engineering	$714,118.00

TABLE 1

				Kimco USA Inc	Westmont engineering
Selected	Line Item	Description	Unit of Measure	Unit Cost	Unit Cost
X	1	Complete Salt Conveyor Removal and Replacement	Lump Sum	$290,772.93	$426,706.00
X	2	Complete Pit, Hopper, and Shed Removal and Replacement	Lump Sum	$307,751.93	$287,412.00
Total				$598,524.86	$714,118.00

Village of Schaumburg
Engineering and Public Works
Mike Hall, Department Director
Atcher Municipal Center, Schaumburg, IL 60193

[KIMCO USA INC] RESPONSE DOCUMENT REPORT

IFB No. 2025-IFB-081

Salt Conveyor Replacement

RESPONSE DEADLINE: January 30, 2026 at 10:00 am

Report Generated: Monday, March 9, 2026

Kimco USA Inc Response

CONTACT INFORMATION

Company:
Kimco USA Inc

Email:
blake@kimcousa.com

Contact:
Blake Coffey

Address:
118 E Trefz Dr
Marshall, IL 62441

Phone:
(217) 512-0157

Website:
kimcousa.com

Submission Date:
Jan 29, 2026 4:04 PM (Central Time)

ADDENDA CONFIRMATION

Addendum #1
Confirmed Jan 26, 2026 1:39 PM by Blake Coffey

QUESTIONNAIRE

1. Authorized Person(s)*

Please provide the following information for each person(s) authorized to submit a response on behalf of your organization:

Name
Title
Phone Number
Email Address

Blake D. Coffey

Vice President

Office: 800-788-1133

Cell: 217-512-0157

Email: blake@kimcousa.com

2. Equal Employment Opportunity Clause*

EQUAL EMPLOYMENT OPPORTUNITY CLAUSE required by the Illinois Fair Employment Practices Commission as a material term of all public contracts.

During the performance of this contract, the contractor agrees as follows:

PRICE TABLES

Line Item	Description	Unit of Measure	Unit Cost
1	Complete Salt Conveyor Removal and Replacement	Lump Sum	$290,772.93
2	Complete Pit, Hopper, and Shed Removal and Replacement	Lump Sum	$307,751.93

RESOLUTION NO. R-26-_____

RESOLUTION TO UTILIZE MOTOR FUEL FUNDS IN ACCORDANCE WITH THE ILLINOIS DEPARTMENT OF TRANSPORTATION RESOLUTION FOR MAINTENANCE OF STREETS AND HIGHWAYS BY SCHAUMBURG UNDER THE ILLINOIS HIGHWAY CODE (2026-2027) (SALT CONVEYOR)

WHEREAS, The President and Board of Trustees of the Village of Schaumburg deem it necessary to appropriate the sum of $598,524.86 of Motor Fuel Tax Funds for the removal and replacement of the salt conveyor and pit under the applicable provisions of the Illinois Highway Code from (May 1, 2026) to (April 30, 2027) described in the attached in the IDOT Resolution; and

WHEREAS, it will be in the best interest of the citizens of Schaumburg to do said work;

NOW, THEREFORE, BE IT RESOLVED BY THE PRESIDENT AND BOARD OF TRUSTEES OF THE VILLAGE OF SCHAUMBURG:

SECTION ONE: That the above be incorporated as official findings of the Village of Schaumburg Board of Trustees.

SECTION TWO: That there is hereby appropriated/budgeted the sum of five hundred ninety-eight thousand, five hundred twenty-four and eighty-six hundredths ($598,524.86) for the removal and replacement of the salt conveyor and pit which will improve the ability to store salt used on streets and highways during the winter, and the expenditure of said amount is hereby authorized from the Village's allotment of motor fuel tax funds.

SECTION THREE: That the Village Manager and Village Clerk be and hereby are authorized to sign the IDOT Resolution, IDOT Resolution, and any documents in furtherance of this Resolution.

SECTION FOUR: That the Village Clerk is hereby directed to transmit two certified copies of this Resolution to the District Office of the Department of Transportation.

SECTION FIVE: This Resolution shall be in full force and effect after passage and approval by required by law.

AYES:
NAYS:
ABSENT:

PASSED AND APPROVED this _____ day of _____, 2026.

_____
Village President

ATTEST:

_____
Village Clerk

Illinois Department of Transportation

Resolution for Improvement Under the Illinois Highway Code

Is this project a bondable capital improvement?

☒ Yes ☐ No

Resolution Type	Resolution Number	Section Number
Original		25-00156-00-MG

BE IT RESOLVED, by the President and Board of Trustees (Governing Body Type) of the Village (Local Public Agency Type)

of Schaumburg (Name of Local Public Agency) Illinois that the following described street(s)/road(s)/structure be improved under the Illinois Highway Code. Work shall be done by Contract (Contract or Day Labor).

For Roadway/Street Improvements:

Name of Street(s)/Road(s)	Length (miles)	Route	From	To

For Structures:

Name of Street(s)/Road(s)	Existing Structure No.	Route	Location	Feature Crossed
Salt Conveyor and Pit Replacement			714 S Plum Grove Rd	

BE IT FURTHER RESOLVED,

1. That the proposed improvement shall consist of

The removal and replacement of the salt conveyor and pit located at the Village of Schaumburg's Engineering and Public Works Department.

2. That there is hereby appropriated the sum of five hundred ninety eight thousand, five hundred twenty-four and eighty-six hundredths Dollars ($598,524.86) for the improvement of said section from the Local Public Agency's allotment of Motor Fuel Tax funds.

BE IT FURTHER RESOLVED, that the Clerk is hereby directed to transmit four (4) certified originals of this resolution to the district office of the Department of Transportation.

I, _____ (Name of Clerk) Village (Local Public Agency Type) Clerk in and for said Village (Local Public Agency Type)

of Schaumburg (Name of Local Public Agency) in the State aforesaid, and keeper of the records and files thereof, as provided by statute, do hereby certify the foregoing to be a true, perfect and complete original of a resolution adopted by

President and Board of Trustees (Governing Body Type) of Schaumburg (Name of Local Public Agency) at a meeting held on _____ (Date).

IN TESTIMONY WHEREOF, I have hereunto set my hand and seal this _____ (Day) day of _____ (Month, Year).

(SEAL, if required by the LPA)

Clerk Signature & Date

Approved

Regional Engineer Signature & Date
Department of Transportation

NOTE: Form instructions should not be included when the form is submitted.

This form shall be used when a Local Public Agency (LPA) wants to construct an improvement using Motor Fuel Tax(MFT) funds. Refer to Chapter 9 of the Bureau of Local Roads and Streets Manual (BLRS Manual) for more detailed information. For signature requirements refer to Chapter 2, Section 3.05(b) of the BLRS Manual.

When filling out this form electronically, once a field is initially completed, fields requiring the same information will be auto-populated.

Is this project a bondable capital improvement?	Check Yes if the project was a bondable capital improvement, check no if it is not. An example of a bondable capital project may include, but is not limited to: project development, design, land acquisition, demolition when done in preparation for additional bondable construction, construction engineering, reconstruction of a roadway, designed overlay extension or new construction of roads, bridges, ramps, overpasses and underpasses, bridge replacement and/or major bridge rehabilitation. Permanent ADA sidewalk/ramp improvements and seeding/sodding are eligible expenditures if part of a larger capital bondable project. A bondable capital improvement project does not mean the LPA was required to sell bonds to fund the project, however the project did meet the criteria to be bondable.
Resolution Number	Enter the resolution number as assigned by the LPA, if applicable.
Resolution Type	From the drop down box choose the type of resolution: - Original would be used when passing a resolution for the first time for this project. - Supplemental would be used when passing a resolution increasing appropriation above previously passed resolutions. - Amended would be used when a previously passed resolution is being amended.
Section Number	Insert the section number of the improvement the resolution covers.
Governing Body Type	From the drop down box choose the type of administrative body. Choose Board for County; Council for a City or Town; President and Board of Trustees for a Village or Town.
LPA Type	From the drop down box choose the LPA body type. Types to choose from are: County, City, Town or Village.
Name of LPA	Insert the name of the LPA.
Contract or Day Labor	From the drop down choose either Contract or Day Labor.
Roadway/Street Improvements:	
Name Street/Road	Insert the name of the Street/Road to be improved. For additional locations use the Add button.
Length	Insert the length of this segment of roadway being improved in miles.
Route	Insert the Route Number of the road/street to be improved if applicable.
From	Insert the beginning point of the improvement as it relates to the Street/Road listed to the left.
To	Insert the ending point of the improvement as it relates to the Street/Road listed to the left.
Structures:	
Name Street/Road	Insert the name of the Street/Road on which the structure is located. For additional locations use the Add button.
Existing Structure No.	Insert the existing structure number this resolution covers, if no current structure insert n/a.
Route	Insert the Route number on which the structure is located.
Location	Insert the location of the structure.
Feature Crossed	Insert the feature the structure crosses.
1	Insert a description of the major items of work of the proposed improvement.
2	Insert the dollar value of the resolution for the proposed improvement to be paid for with MFT funds in words followed by in the same amount in numerical format in the ().

Name of Clerk	Insert the name of the LPA clerk.
LPA Type	Insert the type of clerk based on the LPA type. Types to choose from are: County, City, Town or Village.
Name of LPA	Insert the name of the LPA.
Governing Body Type	Insert the type of administrative body. choose Board for County; Council for a City or Town; President and Board of Trustees for a Village or Town
Name of LPA	Insert the name of the LPA.
Date	Insert the date of the meeting.
Day	Insert the day Clerk is signing the document.
Month, Year	Insert the month and year of the Clerk's signature.
Seal	The Clerk shall seal the document here, if required. If a seal is required, electronic signatures should not be used.
Clerk Signature	Clerk shall sign here.
Approved	The Department of Transportation shall sign and date here once approved.

A minimum of three (3) certified signed originals must be submitted to the Regional Engineer's District office OR email PDF completed form with electronic signatures to your local District LRS office.
Following IDOT's approval, distribution will be as follows:

Local Public Agency Clerk
Engineer (Municipal, Consultant or County)
District

Illinois Department of Transportation

Request for Expenditure/Authorization of Motor Fuel Tax Funds

Local Public Agency	Type	County	Section Number
Village of Schaumburg	Village	Cook	25-00156-00-MG

I hereby request authorization to expend Motor Fuel Tax Funds as indicated below:

Purpose	Motor Fuel Tax Amount	Rebuild Illinois Amount
County Engineer/Superintendent Salary & Expenses		n/a
Contract Construction	$598,524.86	
Day Labor Construction		
Engineering		
Engineering Investigations		
IMRF/Social Security		n/a
Maintenance		
Maintenance Engineering		
Obligation Retirement		n/a
Other		
Right-of-Way (Itemized on 2nd page)		
TOTAL	$598,524.86	

Comments

Local Public Agency Official Signature & Date

Title

Approved

Regional Engineer Signature & Date
Department of Transportation

Department of Transportation Use

Entered By	Date

Itemization of Right-of-Way Request

Location of Property			Property Owner	Acres Right-of-Way	Relocation Costs	Cost of Land Acquired	Cost of Damage to Land not Acquired	Total
Street/Road	Parcel Number	Address of Property Involved						
							TOTAL	

Add Item

Instructions for BLR 09150

This form is used when it is necessary for the Local Public Agency (LPA) to request authorization to disburse Motor Fuel Tax (MFT) funds for various purposes as listed. Some items are automatically authorized by IDOT upon approval of appropriate paperwork. For those items that are not automatically authorized, the LPA must submit this form. It shall be accompanied by the appropriate documentation (e.g. engineering bills, invoices for joint participation). Upon receipt of proper documentation, IDOT will authorize the necessary funds, up to the maximum amount that has been appropriated. Refer to Chapter 9 of the Bureau of Local Roads & Streets Manual for more information. For signature requirements refer to Chapter 2, Section 3.05(b) of the BLRS Manual.

Local Public Agency	Insert the name of the LPA.
Type	From the drop down, select the City, County, Town, Village or Road District.
County	From the drop down, select the name of the County in which the LPA is located.
Section Number	Insert the section number assigned to the project the request for the authorization is for without dashes. The dashes will be inserted automatically.
Purpose - Amount	Insert the amount the request authorization for the purpose listed to the left, under the type of funds the authorization is being requested for. Insert an amount under Motor Fuel Tax (MFT) is request is to use MFT funds. Insert an amount under Rebuild Illinois (RBI) funds if request is to use RBI funding for this purpose. Items listed as an N/A are not eligible for RBI funding.
Total	This is a calculated field, no entry is necessary. It will calculate the total for each type of funding, for all requested authorizations.
Comments	Insert any comments that are relevant to the requested authorization(s).
Signed	The appropriate LPA official must sign, indicate his/her title, and date here.
Approved	The Department of Transportation representative shall sign and date here upon approval.
Department Use Only Entered By	For IDOT use only, indicate the name of the person entering information into the MFT system.
Date	For IDOT use only, indicate the date of entry of the authorization into the MFT system.
Itemization of Right-of-Way Request Location of Property	
Street/Road	Insert the name of the Street/Road of the acquired/used property involved in the Right-of-Way.
Parcel Number	Insert the parcel number as it applies to the location.
Address of Property Involved	Insert the address of the property involved for this location.
Property Owner	Insert the name of the owner(s) of the acquired/used right-of-way.
Relocation Costs	Insert the relocation costs for this parcel, if applicable.
Acres Right-of-Way	Insert the number of acquired/used right-of-way acres.
Cost of Land Acquires	Insert the cost of land being acquired.
Cost of Damage to Land Not Acquired	Insert the cost of damage to land not acquired.
Total	This is a calculated field, no entry is necessary. It is the sum of all costs for this parcel number.
Total(Overall)	This is a calculated field, no entry is necessary. It is the sum of all costs involving right-of-way.

A minimum of three (3) signed originals must be submitted to the Regional Engineer's District office.
Following IDOT's approval, distribution will be as follows:

Local Public Agency Clerk
Engineer (Municipal, Consultant or County)
District

Illinois Department of Transportation

Local Public Agency Formal Contract

Contractor's Name: Kimco USA Inc.

Contractor's Address: 118 E. Trefz Dr | City: Marshall | State: IL | Zip Code: 62441

STATE OF ILLINOIS

Local Public Agency: Village of Schaumburg | County: Cook | Section Number: 25-00156-00-MG

Street Name/Road Name: 714 S Plum Grove Rd | Type of Funds: MFT

☒ CONTRACT BOND (when required)

For a County and Road District Project

Submitted/Approved

Highway Commissioner Signature & Date

Submitted/Approved

County Engineer/Superintendent of HighwaysSignature & Date

For a Municipal Project

Submitted/Approved/Passed

Signature & Date: Justin Briski Digitally signed by Justin Briski Date: 2026.02.05 10:13:12 -06'00'

Official Title: Superintendent of Field Services

Department of Transportation

☒ Concurrence in approval of award

Regional Engineer Signature & Date: Jose Rios / WT 2/25/2026

Local Public Agency	Local Street/Road Name	County	Section Number
Village of Schaumburg	714 S Plum Grove Rd	Cook	25-00156-00-MG

1. THIS AGREEMENT, made and concluded the 30th (Day) day of 01 - 2026 (Month and Year) between the Village (Local Public Agency Type) of Schaumburg (Local Public Agency), known as the party of the first part, and Kimco USA Inc. (Contractor) its successor, and assigns, known as the party of the second part.

2. For and in consideration of the payments and agreements mentioned in the Proposal hereto attached, to be made and performed by the party of the first part, and according to the terms expressed in the Bond referring this contract, the party of the second part agrees with said party of the first part, at its own proper cost and expense, to do all the work, furnish all materials and all labor necessary to complete the work in accordance with the plans and specifications hereinafter described, and in full compliance with all of the terms of this contract.

3. It is also understood and agreed that the LPA Formal Contract Proposal, Special Provisions, Affidavit of Illinois Business Office, Apprenticeship or Training Program Certification, and Contract Bond hereto attached, and the Plans for Section 25-00156-00-MG (Section Number) in Village of Schaumburg (Local Public Agency), approved by the Illinois Department of Transportation on 12/29/25 (Date), are essential documents of this contract and are a part hereof.

4. IN WITNESS WHEREOF, the said parties have executed this contract on the date above mentioned.

Attest: The Village (Local Public Agency Type) of Schaumburg (Name of Local Public Agency)

Clerk Signature & Date

Jane E. Levitt 2/19/26

(SEAL, if required by the LPA)

Party of the First Part Signature & Date

By: Brian L. Townsend 2-18-2026

(If a Corporation)

Corporate Name

KIMCO USA INC.

President, Party of the Second Part Signature & Date

By: 1/29/2026

(SEAL, if required by the LPA)

(If a Limited Liability Corporation)

LLC Name

Manager or Authorized Member, Party of the Second Part

By:

(If a Partnership)

Partner Signature & Date

Attest:

Secretary Signature & Date

Kimberly J. Coffey 1/29/26

Partner Signature & Date

Partners doing Business under the firm name of

(SEAL, if required by the LPA)

Party of the Second Part

(If an individual)

Party of the Second Part Signature & Date

Illinois Department of Transportation

Local Public Agency
Formal Contract Proposal

COVER SHEET

Proposal Submitted By:

Contractor's Name: Kimco USA Inc.

Contractor's Address	City	State	Zip Code
118 E. Trefz Dr.	Marshall	IL	62441

STATE OF ILLINOIS

Local Public Agency	County	Section Number
Village of Schaumburg	Cook	25-00156-00-MG

Route(s) (Street/Road Name)	Type of Funds
714 S Plum Grove Rd	MFT

☐ Proposal Only ☒ Proposal and Plans ☐ Proposal only, plans are separate

Submitted/Approved
For Local Public Agency:

For a County and Road District Project

Submitted/Approved

Highway Commissioner Signature & Date

Submitted/Approved

County Engineer/Superintendent of Highways Signature & Date

For a Municipal Project

Submitted/Approved/Passed

Signature & Date: Justin Briski 12/23/25

Official Title: Superintendent of Field Services

Department of Transportation

Released for bid based on limited review

Regional Engineer Signature & Date: Jose Rios / WT 12/29/2025

Note: All proposal documents, including Proposal Guaranty Checks or Proposal Bid Bonds, should be stapled together to prevent loss when bids are processed.

Local Public Agency	County	Section Number	Route(s) (Street/Road Name)
Village of Schaumburg	Cook	25-00156-00-MG	714 S Plum Grove Rd

NOTICE TO BIDDERS

Sealed proposals for the project described below will be received at the office of Open Gov - Online Portal (Name of Office)

Temporary Village Hall - 1000 Woodfield RD (Address) until 10:00 AM (Time) on 01/30/26 (Date).

Sealed proposals will be opened and read publicly at the office of Open Gov - Online Portal (Name of Office)

Temporary Village Hall - 1000 Woodfield Rd (Address) at 10:00 AM (Time) on 01/30/26 (Date).

DESCRIPTION OF WORK

Location	Project Length
714 S Plum Grove Rd	6 months

Proposed Improvement

The proposed improvement shall consist of the removal and replacement of the existing salt conveyor system at the Village of Schaumburg's salt dome facility located at 714 S Plum Grove Road. Work includes demolition and disposal of the existing conveyor, hopper, pit, and shed. The construction of a new concrete pit with a push wall and support pad, installation of a new stainless steel salt conveyor system, stainless steel pit hopper, and erection of a new shed structure over the pit area.

1. Plans and proposal forms will be available in the office of

   Opengov website

2. ☐ Prequalification

   If checked, the 2 apparent as read low bidders must file within 24 hours after the letting an "Affidavit of Availability" (Form BC 57) in triplicate, showing all uncompleted contracts awarded to them and all low bids pending award for Federal, State, County, Municipal and private work. One original shall be filed with the Awarding Authority and two originals with the IDOT District Office.

3. The Awarding Authority reserves the right to waive technicalities and to reject any or all proposals as provided in BLRS Special Provision for Bidding Requirements and Conditions for Contract Proposals.

4. The following BLR Forms shall be returned by the bidder to the Awarding Authority:
   a. Local Public Agency Formal Contract Proposal (BLR 12200)
   b. Schedule of Prices (BLR 12201)
   c. Proposal Bid Bond (BLR 12230) (if applicable)
   d. Apprenticeship or Training Program Certification (BLR 12325) (do not use for project with Federal funds.)
   e. Affidavit of Illinois Business Office (BLR 12326) (do not use for project with Federal funds)

5. The quantities appearing in the bid schedule are approximate and are prepared for the comparison of bids. Payment to the Contractor will be made only for the actual quantities of work performed and accepted or materials furnished according to the contract. The scheduled quantities of work to be done and materials to be furnished may be increased, decreased or omitted as hereinafter provided.

6. Submission of a bid shall be conclusive assurance and warranty the bidder has examined the plans and understands all requirements for the performance of work. The bidder will be responsible for all errors in the proposal resulting from failure or neglect to conduct an in depth examination. The Awarding Authority will, in no case, be responsible for any costs, expenses, losses or changes in anticipated profits resulting from such failure or neglect of the bidder.

7. The bidder shall take no advantage of any error or omission in the proposal and advertised contract.

8. If a special envelope is supplied by the Awarding Authority, each proposal should be submitted in that envelope furnished by the Awarding Agency and the blank spaces on the envelope shall be filled in correctly to clearly indicate its contents. When an envelope other than the special one furnished by the Awarding Authority is used, it shall be marked to clearly indicate its contents. When sent by mail, the sealed proposal shall be addressed to the Awarding Authority at the address and in care of the official in whose office the bids are to be received. All proposals shall be filed prior to the time and at the place specified in the Notice to Bidders. Proposals received after the time specified will be returned to the bidder unopened.

9 Permission will be given to a bidder to withdraw a proposal if the bidder makes the request in writing or in person before the time for

opening proposals.

Local Public Agency	County	Section Number	Route(s) (Street/Road Name)
Village of Schaumburg	Cook	25-00156-00-MG	714 S Plum Grove Rd

PROPOSAL

1. Proposal of Kimco USA Inc.
Contractor's Name

118 E. Trefz Dr., Marshall, IL 62441
Contractor's Address

2. The plans for the proposed work are those prepared by Justin Briski, Superintendent, Village of Schaumburg and approved by the Department of Transportation on _____.

3. The specifications referred to herein are those prepared by the Department of Transportation and designated as "Standard Specifications for Road and Bridge Construction" and the " Supplemental Specifications and Recurring Special Provisions" thereto, adopted and in effect on the date of invitation for bids.

4. The undersigned agrees to accept, as part of the contract, the applicable Special Provisions indicated on the "Check Sheet for Recurring Special Provisions" contained in this proposal.

5. The undersigned agrees to complete the work within N/A working days or by 08/31/26 unless additional time is granted in accordance with the specifications.

6. The successful bidder at the time of execution of the contract shall be required to deposit a contract bond for the full amount of the award. When a contract bond is not required, the proposal guaranty check will be held in lieu thereof. If this proposal is accepted and the undersigned fails to execute a contract and contract bond as required, it is hereby agreed that the Bid Bond of check shall be forfeited to the Awarding Authority.

7. Each pay item should have a unit price and a total price. If no total price is shown or if there is a discrepancy between the products of the unit price multiplied by the quantity, the unit price shall govern. If a unit price is omitted, the total price will be divided by the quantity in order to establish a unit price. A bid may be declared unacceptable if neither a unit price nor a total price is shown.

8. The undersigned submits herewith the schedule of prices on BLR 12201 covering the work to be performed under this contract.

9. The undersigned further agrees that if awarded the contract for the sections contained in the combinations on BLR 12201, the work shall be in accordance with the requirements of each individual proposal for the multiple bid specified in the Schedule for Multiple Bids below.

10. A proposal guaranty in the proper amount, as specified in BLRS Special Provision for Bidding Requirements and Conditions for Contract Proposals, will be required. Bid Bonds shall be allowed as a proposal guaranty. Accompanying this proposal is either a bid bond, if allowed, on Department form BLR 12230 or a proposal guaranty check, complying with the specifications, made payable to: Village of Schaumburg Treasurer of _____.
The amount of the check is Sixty Thousand Dollars and 00/100 ($60,000.00).

Attach Cashier's Check or Certified Check Here

In the event that one proposal guaranty check is intended to cover two or more bid proposals, the amount must be equal to the sum of the proposal guaranties which would be required for each individual bid proposal. If the proposal guaranty check is placed in another bid proposal, state below where it may be found.

The proposal guaranty check will be found in the bid proposal for: Section Number 25-00156-00-MG

Local Public Agency	County	Section Number	Route(s) (Street/Road Name)
Village of Schaumburg	Cook	25-00156-00-MG	714 S Plum Grove Rd

CONTRACTOR CERTIFICATIONS

The certifications hereinafter made by the bidder are each a material representation of fact upon which reliance is placed should the Department enter into the contract with the bidder.

1. **Debt Delinquency.** The bidder or contractor or subcontractor, respectively, certifies that it is not delinquent in the payment of any tax administered by the Department of Revenue unless the individual or other entity is contesting, in accordance with the procedure established by the appropriate Revenue Act, its liability for the tax or the amount of the tax. Making a false statement voids the contract and allows the Department to recover all amounts paid to the individual or entity under the contract in a civil action.

2. **Bid-Rigging or Bid Rotating**. The bidder or contractor or subcontractor, respectively, certifies that it is not barred from contracting with the Department by reason of a violation of either 720 ILCS 5/33E-3 or 720 ILCS 5/33E-4.

   A violation of section 33E-3 would be represented by a conviction of the crime of bid-rigging which, in addition to Class 3 felony sentencing, provides that any person convicted of this offense, or any similar offense of any state or the United States which contains the same elements as this offense shall be barred for 5 years from the date of conviction from contracting with any unit of State or local government. No corporation shall be barred from contracting with any unit of State or local government as a result of a conviction under this Section of any employee or agent of such corporation if the employee so convicted is no longer employed by the corporation: (1) it has been finally adjudicated not guilty or (2) if it demonstrates to the governmental entity with which it seeks to contract that entity finds that the commission of the offense was neither authorized, requested, commanded, nor performed by a director, officer or a high managerial agent on behalf of the corporation.

   A violation of Section 33E-4 would be represented by a conviction of the crime of bid-rotating which, in addition to Class 2 felony sentencing, provides that any person convicted of this offense or any similar offense of any state or the United States which contains the same elements as this offense shall be permanently barred from contracting with any unit of State of Local government. No corporation shall be barred from contracting with any unit of State or Local government as a result of a conviction under this Section of any employee or agent of such corporation if the employee so convicted is no longer employed by the corporation and: (1) it has been finally adjudicated not guilty or (2) if it demonstrates to the governmental entity with which it seeks to contract and that entity finds that the commission of the offense was neither authorized, requested, commanded, nor performed by a director, officer or a high managerial agent on behalf of the corporation.

3. **Bribery.** The bidder or contractor or subcontractor, respectively, certifies that, it has not been convicted of bribery or attempting to bribe an officer or employee of the State of Illinois or any unit of local government, nor has the firm made an admission of guilt of such conduct which is a matter or record, nor has an official, agent, or employee of the firm committed bribery or attempted bribery on behalf of the firm and pursuant to the direction or authorization of a responsible official of the firm.

4. **Interim Suspension or Suspension.** The bidder or contractor or subcontractor, respectively, certifies that it is not currently under a suspension as defined in Subpart I of Title 44 Subtitle A Chapter III Part 6 of the Illinois Administrative code. Furthermore, if suspended prior to completion of this work, the contract or contracts executed for the completion of this work may be canceled.

Local Public Agency	County	Section Number	Route(s) (Street/Road Name)
Village of Schaumburg	Cook	25-00156-00-MG	714 S Plum Grove Rd

SIGNATURES

(If an individual)

Bidder Signature & Date

Business Address

City | State | Zip Code

(If a partnership)

Firm Name

Signature & Date

Title

Business Address

City | State | Zip Code

Insert the Names and Addresses of all Partners

(If a corporation)

Corporate Name: Kimco USA Inc.

Signature & Date

Title: Vice President & Director

Business Address: 118 E. Trefz Dr.

City: Marshall | State: IL | Zip Code: 62441

Insert Names of Officers

President: Max E. Coffey

Attest:



Secretary

Secretary

Kimberly J. Coffey

Treasurer

Kimberly J. Coffey

Illinois Department of Transportation

Schedule of Prices

Contractor's Name				
Kimco USA Inc.				
Contractor's Address	**City**		**State**	**Zip Code**
118 E. Trefz Dr.	Marshall, IL 62441		IL	62441
Local Public Agency	**County**		**Section Number**	
Village of Schaumburg	Cook		25-00156-00-MG	
Route(s) (Street/Road Name)				
714 S Plum Grove Rd				

Schedule for Multiple Bids

Combination Letter	Section Included in Combinations	Total

Schedule for Single Bid

(For complete information covering these items, see plans and specifications.)

Item Number	Items	Unit	Quantity	Unit Price	Total
1	Salt Conveyor - Rem/Rep	Lump	1	$290,772.93	$290,772.93
2	Pit, Hopper, Shed - Rem/Rep	Lump	1	$307,751.93	$307,751.93
				Bidder's Total Proposal	$ 598,524.86

1. Each pay item should have a unit price and a total price.
2. If no total price is shown or if there is a discrepancy between the product of the unit price multiplied by the quantity, the unit price shall govern.
3. If a unit price is omitted, the total price will be divided by the quantity in order to establish a unit price.
4. A bid may be declared unacceptable if neither a unit price or total price is shown.

Illinois Department of Transportation

Apprenticeship and Training Program Certification

Local Public Agency	County	Street Name/Road Name	Section Number
Village of Schaumbug	Cook	714 S Plum Grove Rd	25-00156-00-MG

All contractors are required to complete the following certification

☐ For this contract proposal or for all bidding groups in this deliver and install proposal.

☐ For the following deliver and install bidding groups in this material proposal.

Illinois Department of Transportation policy, adopted in accordance with the provisions of the Illinois Highway Code, requires this contract to be awarded to the lowest responsive and responsible bidder. The award decision is subject to approval by the Department. In addition to all other responsibility factors, this contract or deliver and install proposal requires all bidders and all bidder's subcontractors to disclose participation in apprenticeship or training programs that are (1) approved by and registered with the United States Department of Labor's Bureau of Apprenticeship and Training, and (2) applicable to the work of the above indicated proposals or groups. Therefore, all bidders are required to complete the following certification:

1. Except as provided in paragraph 4 below, the undersigned bidder certifies that it is a participant, either as an individual or as part of a group program, in an approved apprenticeship or training program applicable to each type of work or craft that the bidder will perform with its own employees.

2. The undersigned bidder further certifies, for work to be performed by subcontract, that each of its subcontractors either (A) is, at the time of such bid, participating in an approved, applicable apprenticeship or training program; or (B) will, prior to commencement of performance of work pursuant to this contract, establish participation in an approved apprenticeship or training program applicable to the work of the subcontract.

3. The undersigned bidder, by inclusion in the list in the space below, certifies the official name of each program sponsor holding the Certificate of Registration for all of the types of work or crafts in which the bidder is a participant and that will be performed with the bidder's employees. Types of work or craft that will be subcontracted shall be included and listed as subcontract work. The list shall also indicate any type of work or craft job category for which there is no applicable apprenticeship or training program available.

Installation of Concrete Salt Conveyor Pit - Kimco USA Inc Work Force Prevailing Wage, No apprenticeship or training available
Intallation of Stainless Steel Salt Conveyor - Kimco USA Inc. Work Force Prevailing Wage, No apprenticeship or training available
We are currently looking at partnering with Associated Builders and Contractors of Illinois to offer apprenticeship and training program. We haven't decided if we are using a subcontractor or our own forces to complete the concrete salt conveyor pit. If we do we will make sure they have the applicable Certificate of Registration with the USDOL

4. Except for any work identified above, if any bidder or subcontractor shall perform all or part of the work of the contract or deliver and install proposal solely by individual owners, partners or members and not by employees to whom the payment of prevailing rates of wages would be required, check the following box, and identify the owner/operator workforces and positions of ownership. ☐

The requirements of this certification and disclosure are a material part of the contract, and the contractor shall require this certification provision to be included in all approved subcontracts. The bidder is responsible for making a complete report and shall make certain that each type of work or craft job category that will be utilized on the project is accounted for and listed. The Department at any time before or afterward may require the production of a copy of each applicable Certificate of Registration issued by the United States Department of Labor evidencing such participation by the contractor and any or all of its subcontractors. In order to fulfill the participation requirement, it shall not be necessary that any applicable program sponsor be currently taking or that it will take applications for apprenticeship, training or employment during the performance of the work of this contract or deliver and install proposal.

Bidder	Signature & Date
Kimco USA Inc.	1/29/26
Title	
Vice President	

Address	City	State	Zip Code
118 E. Trefz Dr.	Marshall	IL	62441

Illinois Department of Transportation

Affidavit of Illinois Business Office

Local Public Agency	County	Street Name/Road Name	Section Number
Village of Schaumburg	Cook	714 S Plum Grove Rd	25-00156-00-MG

I, Blake D. Coffey (Name of Affiant) of Charleston (City of Affiant), Illinois (State of Affiant), being first duly sworn upon oath, state as follows:

1. That I am the Vice President & Director (Officer or Position) of Kimco USA Inc. (Bidder).
2. That I have personal knowledge of the facts herein stated.
3. That, if selected under the proposal described above, Kimco USA Inc. (Bidder), will maintain a business office in the State of Illinois, which will be located in Clark (County) County, Illinois.
4. That this business office will serve as the primary place of employment for any persons employed in the construction contemplated by this proposal.
5. That this Affidavit is given as a requirement of state law as provided in Section 30-22(8) of the Illinois Procurement Code.

Signature & Date: 1/29/2026

Print Name of Affiant: Blake D. Coffey

Notary Public

State of IL

County Edgar

Signed (or subscribed or attested) before me on 1.29.2026 (date) by Blake Coffey (name/s of person/s), authorized agent(s) of Kimco USA INC (Bidder)

LOGAN M DEWEESE
Notary Public - State of Illinois
Commission No. 977276
My Comm. Exp. 08/28/2027
(SEAL)

Notary Public Signature & Date: 1.29.26

My commission expires 8.28.27

Illinois Department of Transportation

Check Sheet for Recurring Special Provisions

Local Public Agency	County	Section Number
Village of Schaumburg	Cook	25-00156-00-MG

☐ **Check this box for lettings prior to 01/01/2026**

The Following Recurring Special Provisions Indicated By An "X" Are Applicable To This Contract And Are Included By Reference:

Recurring Special Provisions

Check Sheet #			Page No.
1	☐	Additional State Requirements for Federal-Aid Construction Contracts	87
2	☐	Subletting of Contracts (Federal-Aid Contracts)	90
3	☐	EEO	91
4	☐	Specific EEO Responsibilities Non Federal-Aid Contracts	101
5	☐	Required Provisions - State Contracts	106
6	☐	Asbestos Bearing Pad Removal	112
7	☐	Asbestos Waterproofing Membrane and Asbestos HMA Surface Removal	113
8	☐	Temporary Stream Crossings and In-Stream Work Pads	114
9	☐	Construction Layout Stakes	115
10	☐	Use of Geotextile Fabric for Railroad Crossing	118
11	☐	Subsealing of Concrete Pavements	120
12	☐	Hot-Mix Asphalt Surface Correction	124
13	☐	Pavement and Shoulder Resurfacing	126
14	☐	Patching with Hot-Mix Asphalt Overlay Removal	127
15	☐	Polymer Concrete	129
16	☐	Reserved	131
17	☐	Bicycle Racks	132
18	☐	Temporary Portable Bridge Traffic Signals	134
19	☐	Nighttime Inspection of Roadway Lighting	136
20	☐	English Substitution of Metric Bolts	137
21	☐	Calcium Chloride Accelerator for Portland Cement Concrete	138
22	☐	Quality Control of Concrete Mixtures at the Plant	139
23	☐	Quality Control/Quality Assurance of Concrete Mixtures	147
24	☐	Reserved	163
25	☐	Reserved	164
26	☐	Temporary Raised Pavement Markers	165
27	☐	Restoring Bridge Approach Pavements Using High-Density Foam	166
28	☐	Portland Cement Concrete Inlay or Overlay	169
29	☐	Portland Cement Concrete Partial Depth Hot-Mix Asphalt Patching	173
30	☐	Longitudinal Joint and Crack Patching	176
31	☐	Concrete Mix Design - Department Provided	178
32	☐	Station Numbers in Pavements or Overlays	179

Local Public Agency	County	Section Number
Village of Schaumburg	Cook	25-00156-00-MG

The Following Local Roads And Streets Recurring Special Provisions Indicated By An "X" Are Applicable To This Contract And Are Included By Reference:

Local Roads And Streets Recurring Special Provisions

Check Sheet #			Page No.
LRS 1		**Reserved**	181
LRS 2	☐	Furnished Excavation	182
LRS 3	☐	Work Zone Traffic Control Surveillance	183
LRS 4	☐	Flaggers in Work Zones	184
LRS 5	☐	Contract Claims	185
LRS 6	☒	Bidding Requirements and Conditions for Contract Proposals	186
LRS 7	☐	Bidding Requirements and Conditions for Material Proposals	192
LRS 8		**Reserved**	198
LRS 9	☐	Bituminous Surface Treatments	199
LRS 10		**Reserved**	203
LRS 11	☐	Employment Practices	204
LRS 12	☐	Wages of Employees on Public Works	206
LRS 13	☐	Selection of Labor	208
LRS 14	☐	Paving Brick and Concrete Paver Pavements and Sidewalks	209
LRS 15	☐	Partial Payments	212
LRS 16	☐	Protests on Local Lettings	213
LRS 17	☐	Substance Abuse Prevention Program	214
LRS 18	☐	Multigrade Cold Mix Asphalt	215
LRS 19	☐	Reflective Crack Control Treatment	216

Illinois Department of Transportation

Special Provisions

Local Public Agency	County	Section Number
Village of Schaumburg	Cook	25-00156-00-MG

The following Special Provision supplement the "Standard Specifications for Road and Bridge Construction", adopted January 1, 2022, the latest edition of the "Manual on Uniform Traffic Control Devices for Streets and Highways", and the "Manual of Test Procedures of Materials" in effect on the date of invitation of bids, and the Supplemental Specification and Recurring Special Provisions indicated on the Check Sheet included here in which apply to and govern the construction of the above named section, and in case of conflict with any parts, or parts of said Specifications, the said Special Provisions shall take precedence and shall govern.

SPECIAL PROVISION

SALT CONVEYOR, PIT, AND SHED REPLACEMENT

1. DESCRIPTION

This work consists of furnishing all labor, equipment, materials, and incidentals necessary to remove the existing salt conveyor system, pit, hopper, support components, and shed, and to install a complete replacement system at the locations shown in the plans. Work includes demolition, disposal, fabrication, and installation of a new conveyor, stainless steel pit hopper, drive system, pit structure, support framing, push wall, shed, and all components necessary to provide a fully functional salt-handling system.

All work shall be performed according to the Standard Specifications for Road and Bridge Construction, the contract plans, and these Special Provisions.

2. MATERIALS

All materials shall be new and shall conform to the applicable sections of the Standard Specifications unless modified herein.

Stainless steel conveyor components shall include a minimum 10-gauge stainless steel mainframe, stainless steel supports and bracing, stainless steel tail mounts, stainless steel belt wrap sections, stainless steel return idlers or UHMW rollers, stainless steel deflector plates, and a minimum 24-inch conveyor belt.

The pit hopper shall be fabricated from stainless steel plate, stainless steel angle bracing, stainless steel bars, rods, and cross members as shown in the plans and manufacturer's specifications.

The drive system shall include a 40-HP electric motor (3-phase), stainless steel NEMA 4X control panel, stainless steel head roller, tail roller, belt track roller, take-up roller, gear reducer, and an automatic lubrication system.

The pit structure, supporting steel, push wall, and shed shall be constructed using materials meeting the applicable structural steel, concrete, and reinforcement requirements of the Standard Specifications.

Electrical components shall conform to the National Electrical Code and Section 801 of the Standard Specifications.

3. CONSTRUCTION REQUIREMENTS

3.1 Demolition

The Contractor shall remove and dispose of all components of the existing conveyor system, pit, supports,

shed, electrical components, and other elements identified in the plans. Removal shall conform to Section 202 of the Standard Specifications.

3.2 Installation

The Contractor shall fabricate and install the new conveyor system, pit hopper, supports, pit structure, and shed in accordance with the plans and manufacturer's technical specifications. All stainless steel fabrication shall meet applicable ASTM standards and IDOT tolerances.

3.3 Electrical Work

All wiring, conduit, controls, and electrical connections shall be installed in accordance with the National Electrical Code and Section 801. The Contractor shall coordinate with the agency regarding available power.

3.4 Testing and Commissioning

The conveyor system shall be tested for proper alignment, belt tracking, motor and drive performance, control panel operation, material flow rate, and discharge distance. The installation will not be accepted until full operational capability is demonstrated.

4. METHOD OF MEASUREMENT

This work will be measured for payment on a lump sum basis. No separate measurement will be made for demolition, structural steel, concrete, electrical work, control panel installation, lubrication system, testing, or any incidental work necessary to complete the installation.

Everything required to provide a complete, operational conveyor system shall be included in the lump sum.

5. BASIS OF PAYMENT

This work will be paid for at the contract unit price per Lump Sum for "Salt Conveyor, Pit, and Shed Replacement."

Payment shall be full compensation for demolition, disposal, fabrication and installation of the conveyor system, pit hopper, pit structure, push wall, shed, electrical components, control panel, drive system, lubrication system, testing, commissioning, materials, labor, equipment, and all incidental work necessary to complete the installation.

No additional payment will be made for temporary supports, specialty fabrication, utility coordination, or modifications made to ensure full system functionality.

6. SUBMITTALS

The Contractor shall submit the following for approval before fabrication begins: installation drawings, shop drawings stamped by an Illinois Structural Engineer, technical data sheets for the conveyor, motor, electrical components, lubrication system, and all operation and maintenance manuals.

GENERAL NOTES

1. PROJECT LOCATION: LAKE COUNTY, IL
2. CODES AND DOCUMENTS
   - A. THE FOLLOWING CODES WERE USED FOR DESIGN:
     - I. INTERNATIONAL BUILDING CODE 2012
     - II. AASHTO LRFD BRIDGE DESIGN SPECIFICATIONS
     - III. BUILDING CODE REQUIREMENTS FOR STRUCTURAL CONCRETE, ACI 318-11
3. DESIGN CRITERIA
   - A. LIVE LOADS
     - I. DESIGN TRUCK WHEEL LOAD (HL-93) 16 KIPS
     - II. SALT LOAD IN HOPPER 24 KIPS
4. FOUNDATIONS
   - A. FOUNDATIONS HAVE BEEN DESIGNED BASED ON THE FOLLOWING DESIGN VALUES:
     - I. WEIGHT OF BACKFILL 115 PCF
     - II. AT-REST LATERAL SOIL COEFFICIENT 0.63
   - B. THE CONTRACTOR SHALL VERIFY WITH A GEOTECHNICAL ENGINEER THAT THE FOLLOWING IS IN CONFORMANCE WITH THE RECOMMENDATIONS OUTLINED IN THE GEOTECHNICAL REPORT BY PROFESSIONAL SERVICE INDUSTRIES, INC., DATED JUNE 5, 2008:
     - I. THE BEARING STRATUM AT EACH FOUNDATION IS AS ASSUMED IN THE REPORT.
     - II. THE ALLOWABLE BEARING CAPACITIES MEET OR EXCEED THE RECOMMENDED VALUES.
     - III. THE FILL MATERIAL IS INSTALLED PER THE REPORT RECOMMENDATIONS.
   - C. PLACE FOOTINGS AND SLAB ON GRADE ON UNDISTURBED, NATURAL SUBGRADE, AS VERIFIED BY A QUALIFIED GEOTECHNICAL ENGINEER RETAINED FOR THE PROJECT. IF SUBGRADE IS DEEMED UNSUITABLE, EXTEND EXCAVATION TO SUITABLE, UNDISTURBED NATURAL SUBGRADE AND RAISE GRADE USING COMPACTED ENGINEERED FILL OR PLAIN CONCRETE, AS DETERMINED AND INSPECTED BY A QUALIFIED GEOTECHNICAL ENGINEER.
5. REINFORCEMENT
   - A. REINFORCEMENT SHALL CONFORM TO THE FOLLOWING STANDARDS AND MATERIAL PROPERTIES:
     - I. DEFORMED BARS: ASTM A615 GRADE 60
   - B. WHERE DOWELS ARE INDICATED BUT NOT SIZED, PROVIDE DOWELS THAT MATCH SIZE AND LOCATION OF MAIN REINFORCEMENT AND LAP SPLICE WITH THE MAIN REINFORCEMENT.
   - C. UNLESS OTHERWISE NOTED, USE CLASS B LAP SPLICES.
   - D. REINFORCEMENT SHALL HAVE THE FOLLOWING CONCRETE PROTECTION (CLEAR COVER), UNLESS OTHERWISE NOTED:
     - I. CONCRETE CAST AGAINST AND PERMANENTLY EXPOSED TO EARTH: 3"
     - II. FORMED CONCRETE SURFACES TO BE EXPOSED TO EARTH OR WEATHER:
       - 2" (#6 BARS AND LARGER)
       - 1½" (#5 BARS AND SMALLER)
6. CONCRETE MATERIAL PROPERTIES
   - A. CONCRETE STRENGTH SHALL MEET THE FOLLOWING 28-DAY COMPRESSIVE STRENGTHS (f'c) UNLESS OTHERWISE NOTED:
     - 4500 PSI, NORMAL WEIGHT CONCRETE
   - B. CONCRETE TO HAVE SLUMP, AIR ENTRAINMENT, OTHER ADMIXTURES, ETC. IN ACCORDANCE WITH OWNER SPECIFICATIONS. AIR ENTRAINMENT SHALL BE BETWEEN 4.5 AND 7.5 PERCENT.
7. CAST IN PLACE CONCRETE
   - A. CONCRETE WORK SHALL CONFORM TO ALL REQUIREMENTS OF ACI 301, LATEST EDITION, SPECIFICATIONS FOR STRUCTURAL CONCRETE FOR BUILDINGS, EXCEPT AS MODIFIED BY SUPPLEMENTAL REQUIREMENTS CONTAINED IN THE FOLLOWING NOTES.
   - B. UNLESS OTHERWISE DETAILED OR NOTED, REINFORCING SHALL BE IN ACCORDANCE WITH "THE ACI DETAILING MANUAL, SP-66" & ACI 315 "DETAILS AND DETAILING OF CONCRETE REINFORCEMENT."
   - C. CHAMFER EXPOSED CORNERS OF CONCRETE SLAB AND WALLS 3/4".
   - D. ERECTION OF REINFORCED CONCRETE SHALL CONFORM TO THE LATEST EDITION OF ACI 117 "SPECIFICATION FOR CONCRETE CONSTRUCTION AND MATERIALS."
8. EMBEDDED ITEMS
   - A. ALL EMBEDDED PLATES AND ANGLES SHALL BE ASTM A36 MATERIAL AND HOT DIP GALVANIZED PER ASTM A123.
   - B. WELDING STUDS SHALL BE H4L HEADED CONCRETE ANCHORS AS MANUFACTURED BY NELSON STUD WELDING, INC., 1/2" DIAMETER x 4" LONG, TYP. UNLESS NOTED OTHERWISE.

DRAWING INDEX

S-1 GENERAL NOTES & DRAWING INDEX
S-2 SALT CONVEYOR PIT PLAN
S-3 SALT CONVEYOR PIT SECTIONS
S-4 SALT CONVEYOR PIT DETAILS
S-5 SALT CONVEYOR PIT DETAILS
S-6 SALT CONVEYOR PIT DETAILS
S-7 SALT CONVEYOR PIT DETAILS
S-8 SALT CONVEYOR PIT DETAILS

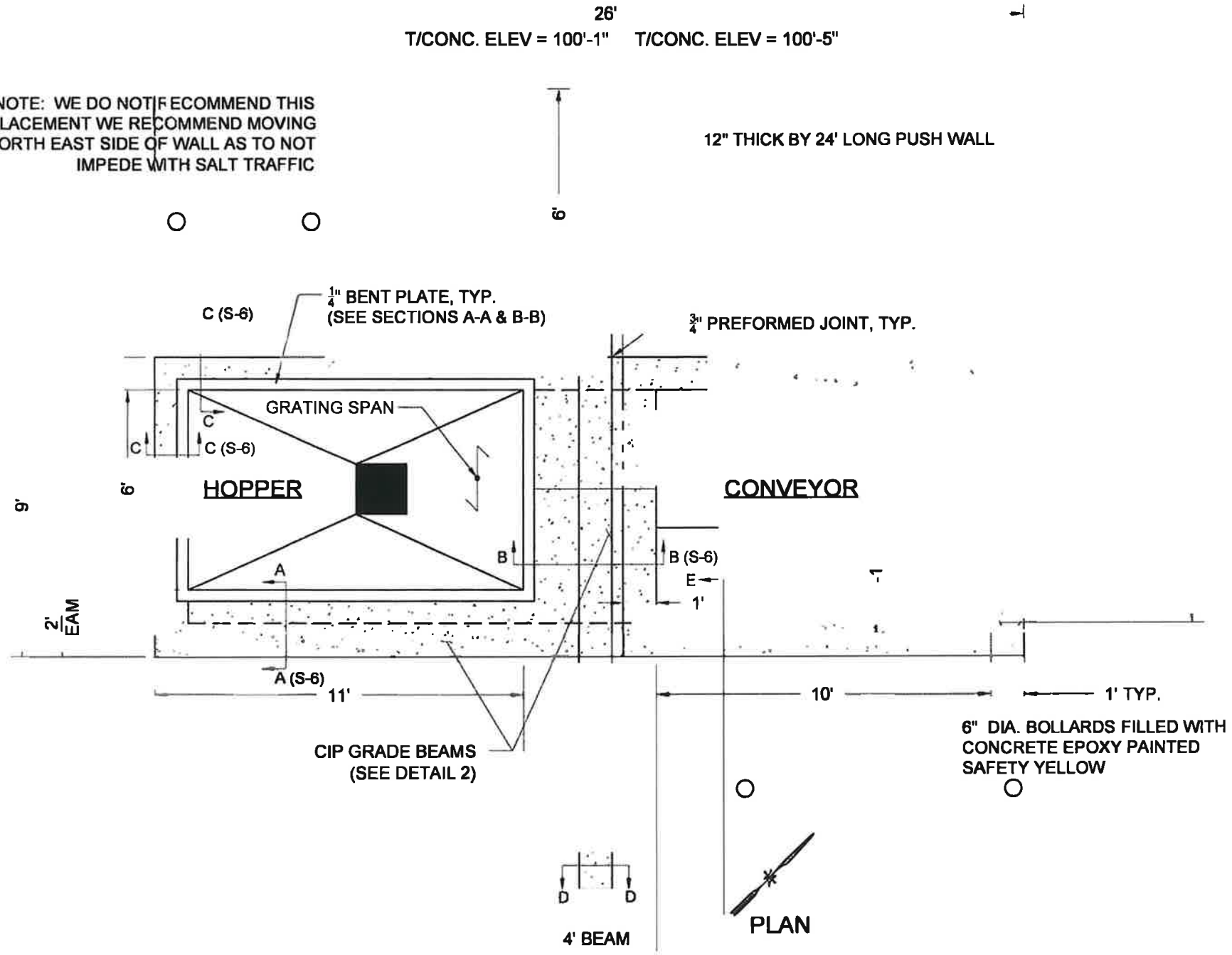

NOTES:
1. FOR GENERAL NOTES, SEE DRAWING S-1.
2. EXISTING GRADE REFERENCE ELEV. APPROX. = 100'-0"

DRAWING NO.: S–2

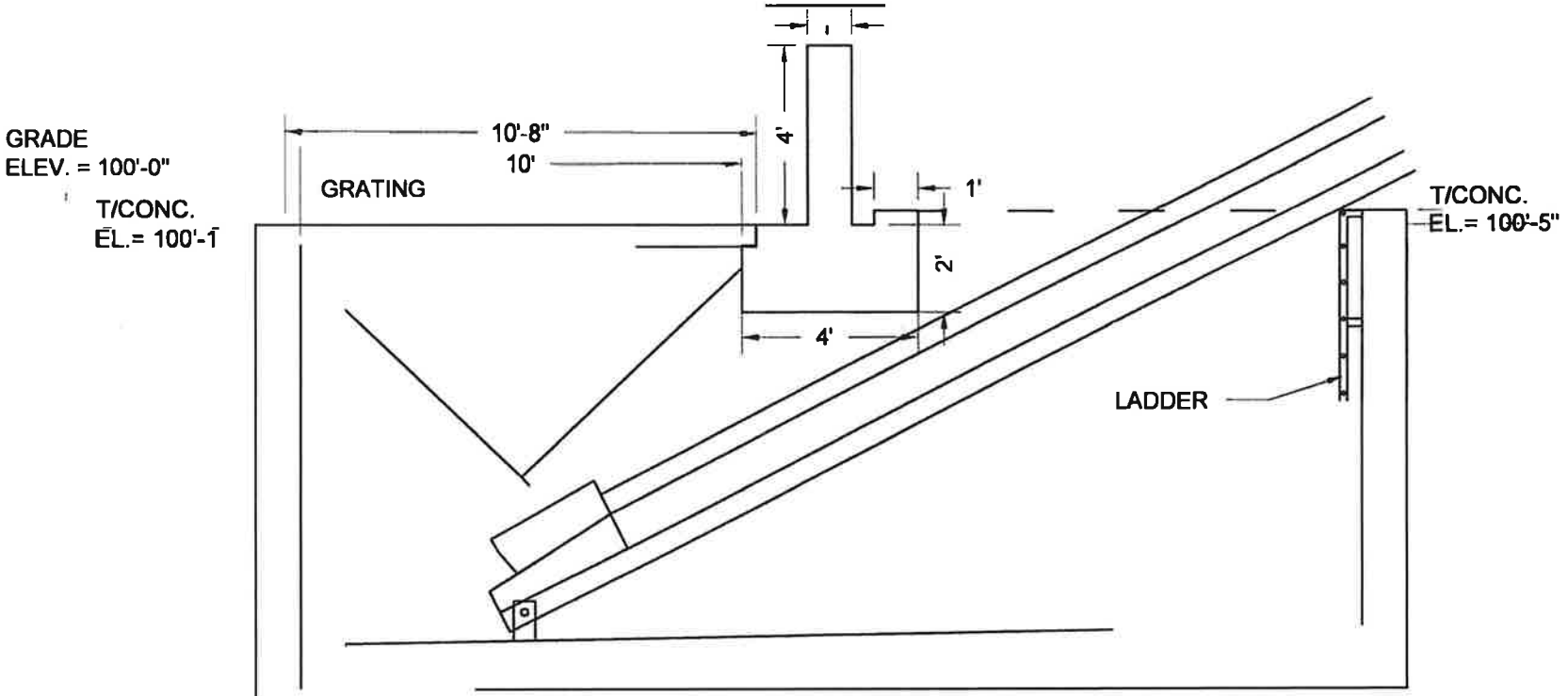

SECTION THRU PIT
LOOKING NORTH
WEST)

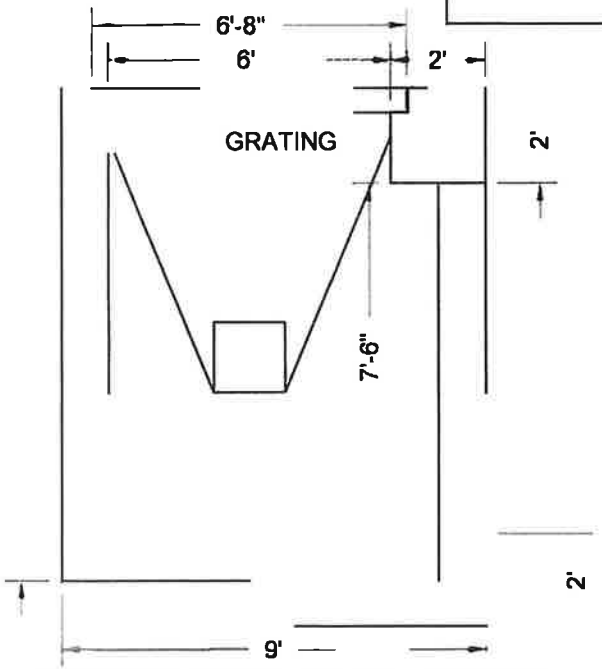

SECTION THRU PIT AT HOPPER
LOOKING SOUTH WEST

NOTES:
1. FOR GENERAL NOTES, SEE DRAWING S-1.
2. EXISTING GRADE REFERENCE ELEV. APPROX. = 100'-0"

DRAWING NO.: S-3

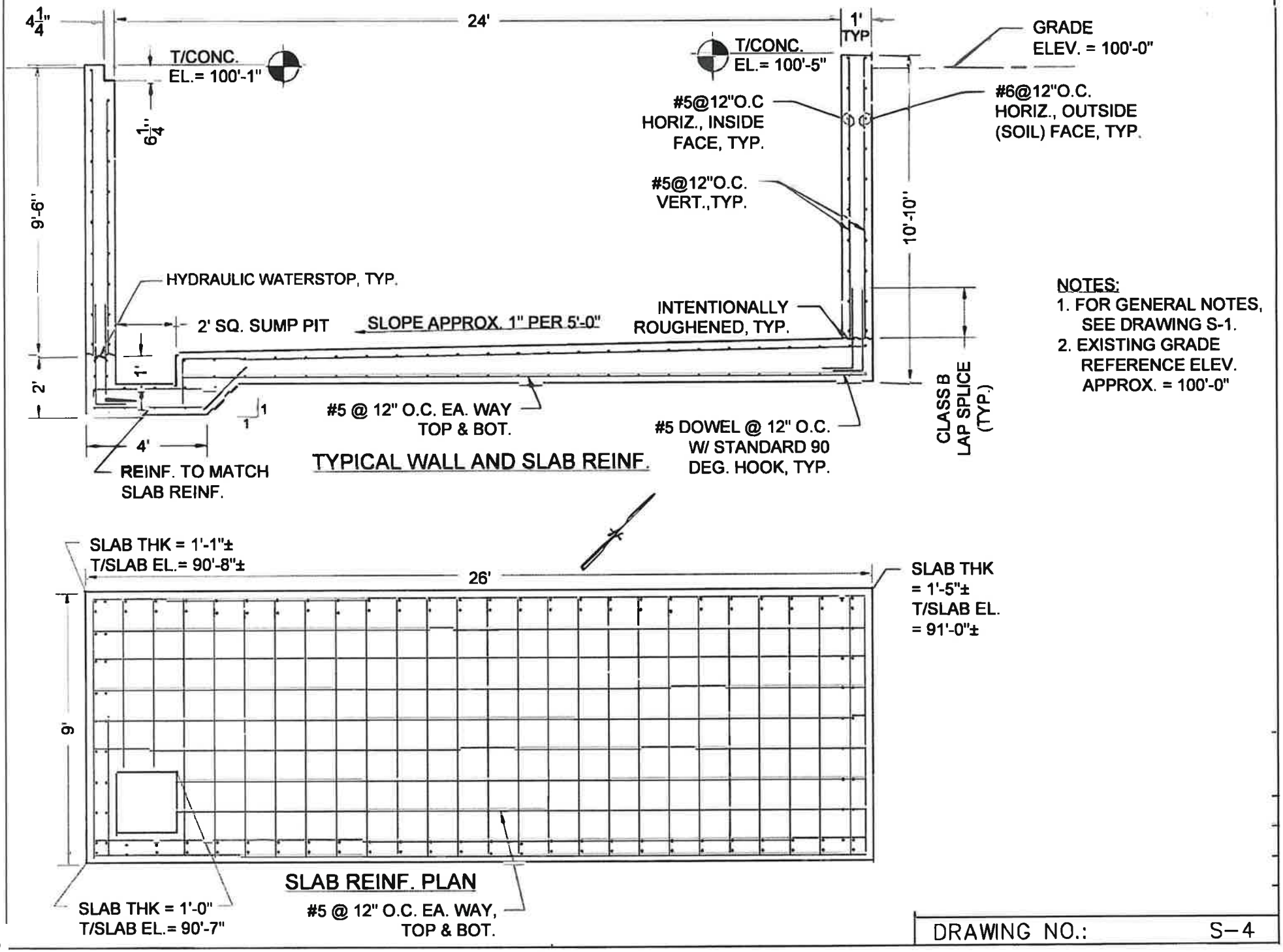

DRAWING NO.: S-4

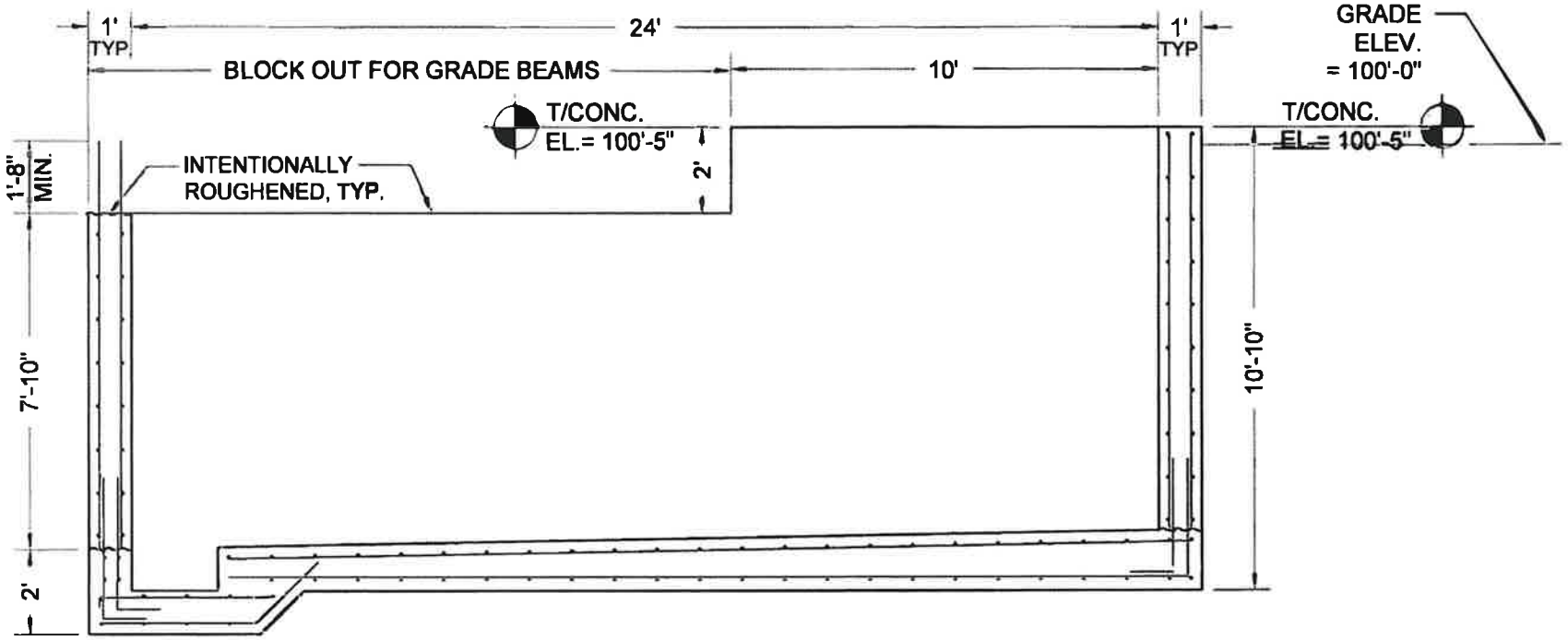

WALL BLOCKOUT FOR GRADE BEAMS

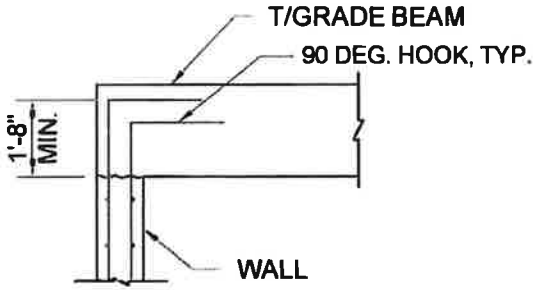

TYPICAL BAR EXTENSION DETAIL AT GRADE BEAMS

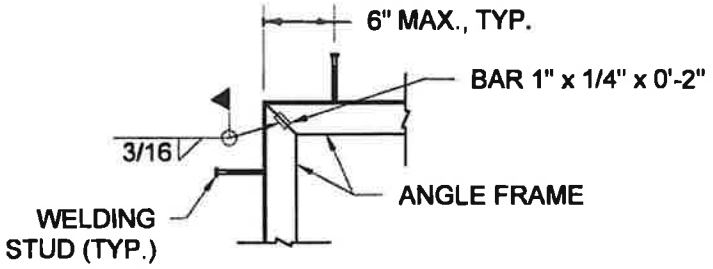

EMBEDDED PLATE TYPICAL CORNER DETAIL

NOTES:
1. FOR GENERAL NOTES, SEE DRAWING S-1.
2. EXISTING GRADE REFERENCE ELEV. APPROX. = 100'-0"

DRAWING NO.: S-5

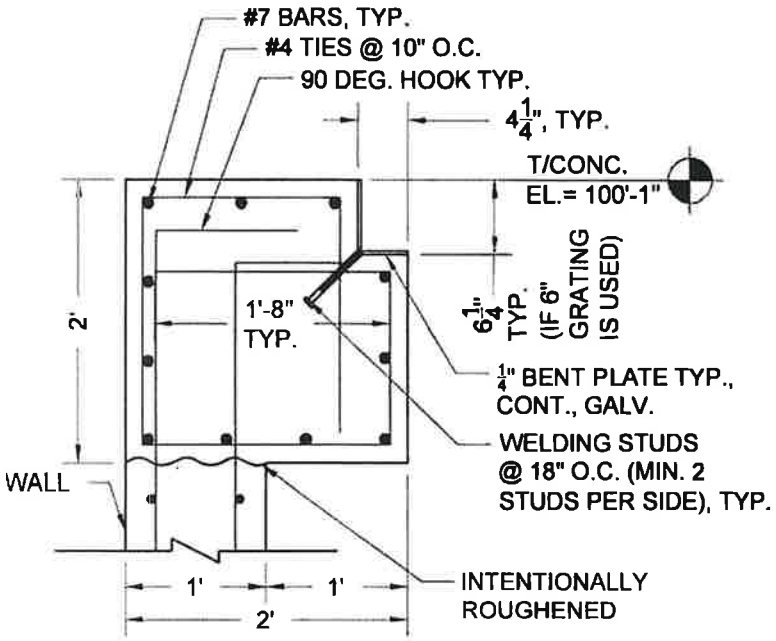

SECTION A-A: 2'X2' GRADE BEAM

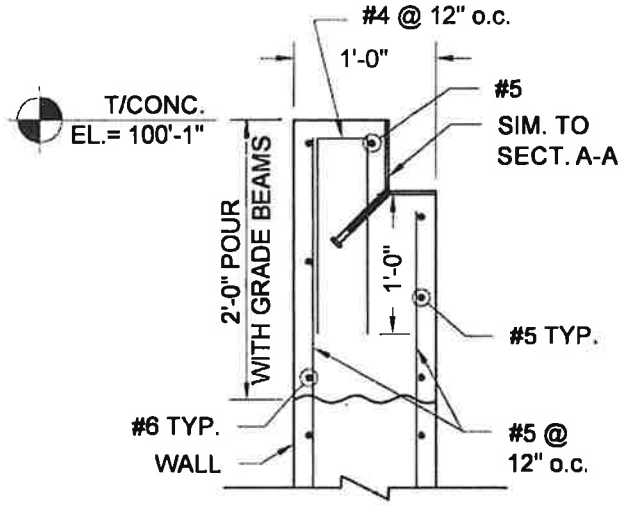

SECTION C-C

NOTES:
1. FOR GENERAL NOTES, SEE DRAWING S-1.
2. EXISTING GRADE REFERENCE ELEV. APPROX. = 100'-0"

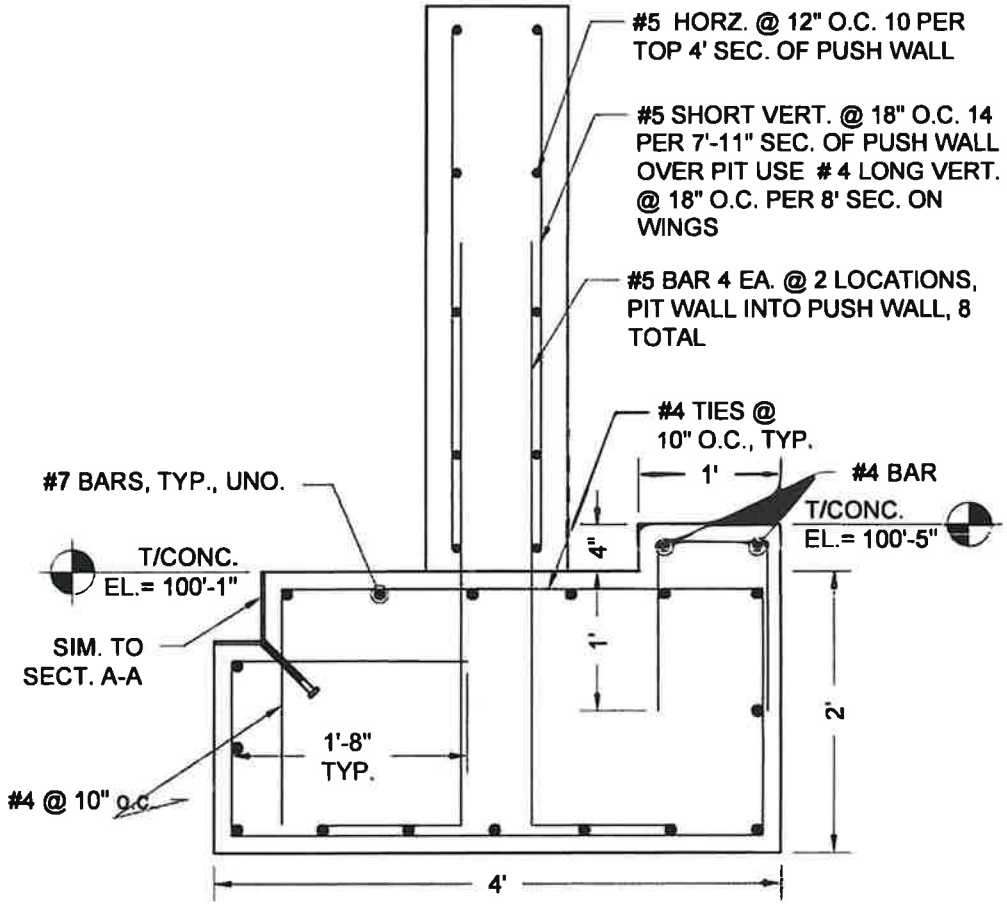

SECTION B-B: 4'X2' GRADE BEAM

DRAWING NO.:	S–6

CONVEYOR SIDE HOPPER SIDE

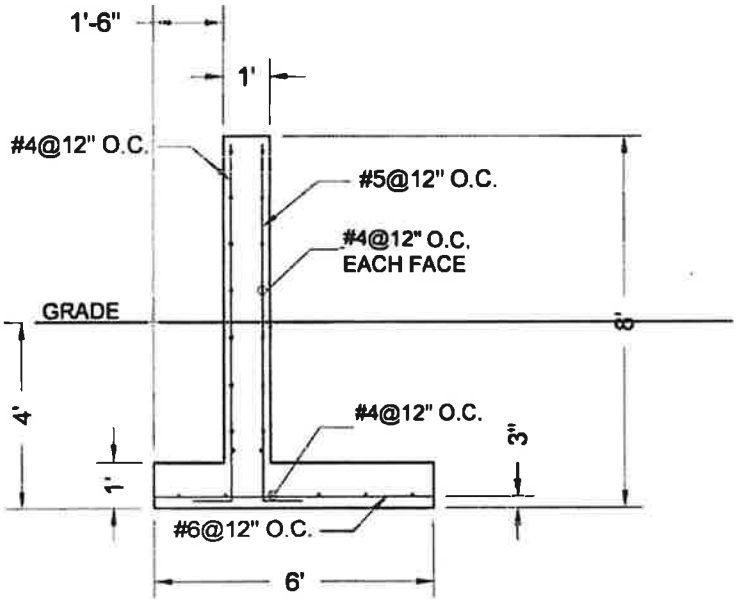

SECTION D-D

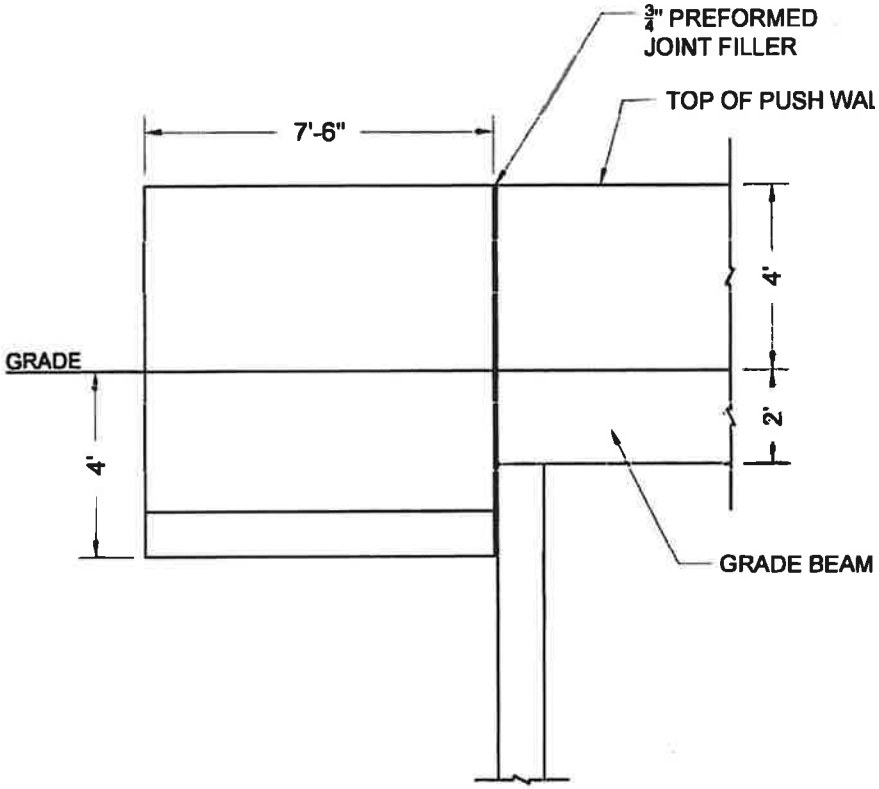

SECTION E-E

DRAWING NO.: S-7

PLAN VIEW

NOTES:
1. STANDARD 90 DEG. HOOK
   = 7½" FOR #5 BARS
   = 9" FOR #6 BARS
2. CLASS B LAP SPLICE
   = 28" FOR #5 BARS
   = 33" FOR #6 BARS
   (IF MULTIPLE BAR SIZES, USE THE LONGER LAP SPLICE)

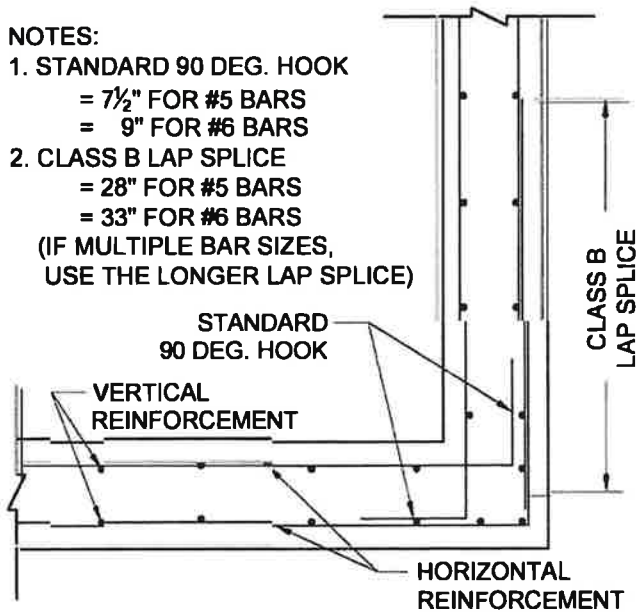

TYPICAL WALL CORNER REINFORCEMENT

(SCALE: NOT TO SCALE)

DRAWING NO.: S–8

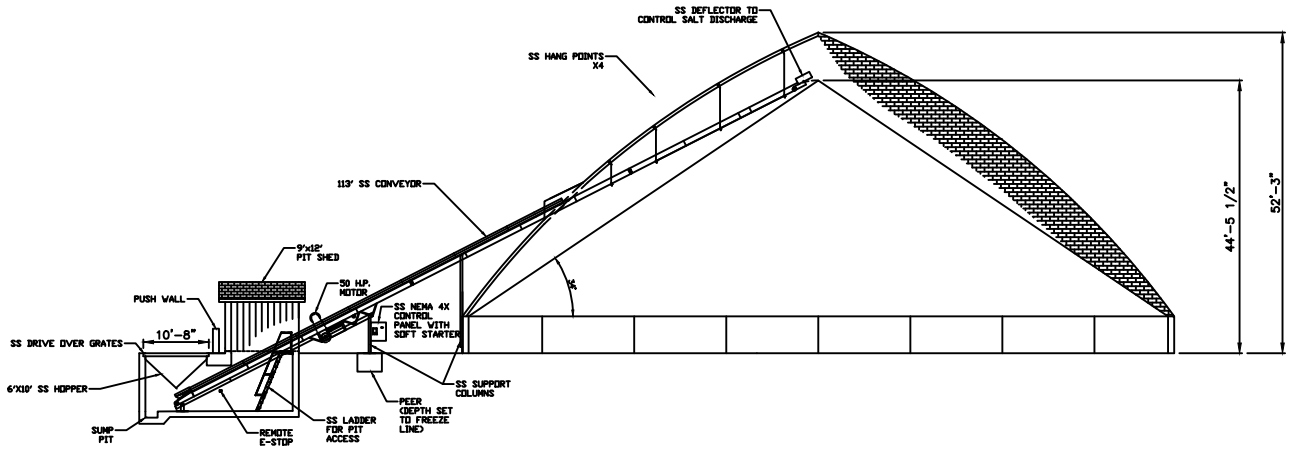

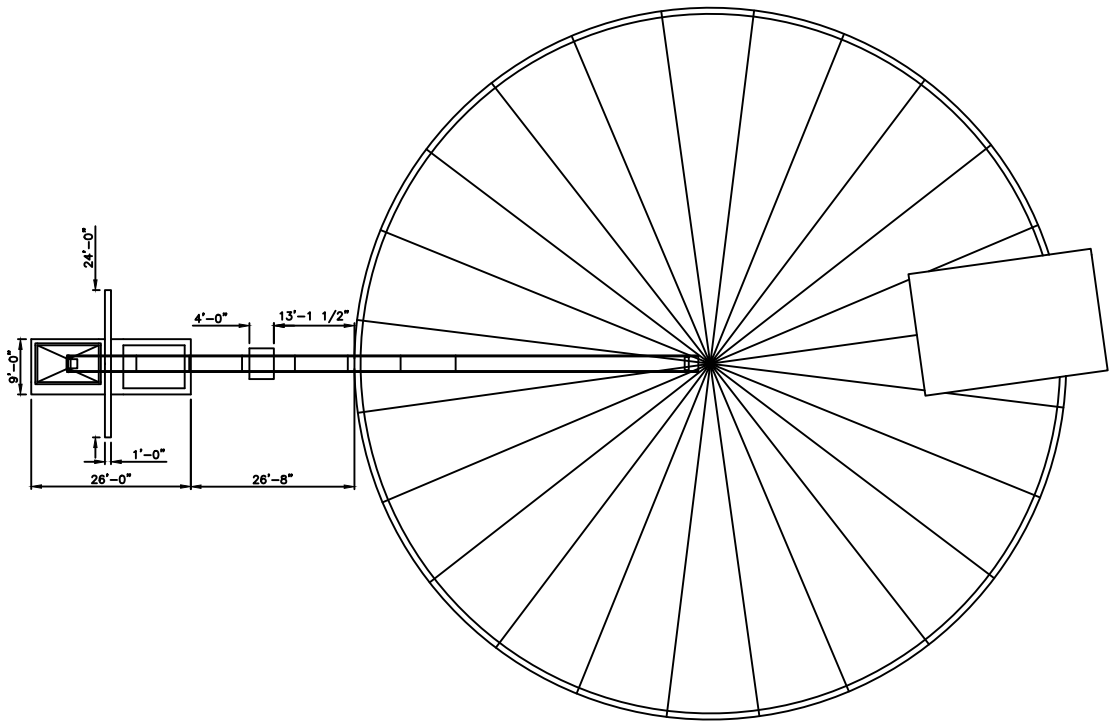

NOTES:
-SS TO DENOTE 304 STAINLESS STEEL
-EXISTING PIT TO BE DEMOLISHED
-SEE ADDITIONAL PIT DRAWING FOR STRUCTURAL ENGENDERED PLANS

GENERAL NOTES

1. PROJECT LOCATION: LAKE COUNTY, IL
2. CODES AND DOCUMENTS
   - A. THE FOLLOWING CODES WERE USED FOR DESIGN:
     - I. INTERNATIONAL BUILDING CODE 2012
     - II. AASHTO LRFD BRIDGE DESIGN SPECIFICATIONS
     - III. BUILDING CODE REQUIREMENTS FOR STRUCTURAL CONCRETE, ACI 318-11
3. DESIGN CRITERIA
   - A. LIVE LOADS
     - I. DESIGN TRUCK WHEEL LOAD (HL-93) 16 KIPS
     - II. SALT LOAD IN HOPPER 24 KIPS
4. FOUNDATIONS
   - A. FOUNDATIONS HAVE BEEN DESIGNED BASED ON THE FOLLOWING DESIGN VALUES:
     - I. WEIGHT OF BACKFILL 115 PCF
     - II. AT-REST LATERAL SOIL COEFFICIENT 0.63
   - B. THE CONTRACTOR SHALL VERIFY WITH A GEOTECHNICAL ENGINEER THAT THE FOLLOWING IS IN CONFORMANCE WITH THE RECOMMENDATIONS OUTLINED IN THE GEOTECHNICAL REPORT BY PROFESSIONAL SERVICE INDUSTRIES, INC., DATED JUNE 5, 2008:
     - I. THE BEARING STRATUM AT EACH FOUNDATION IS AS ASSUMED IN THE REPORT.
     - II. THE ALLOWABLE BEARING CAPACITIES MEET OR EXCEED THE RECOMMENDED VALUES.
     - III. THE FILL MATERIAL IS INSTALLED PER THE REPORT RECOMMENDATIONS.
   - C. PLACE FOOTINGS AND SLAB ON GRADE ON UNDISTURBED, NATURAL SUBGRADE, AS VERIFIED BY A QUALIFIED GEOTECHNICAL ENGINEER RETAINED FOR THE PROJECT. IF SUBGRADE IS DEEMED UNSUITABLE, EXTEND EXCAVATION TO SUITABLE, UNDISTURBED NATURAL SUBGRADE AND RAISE GRADE USING COMPACTED ENGINEERED FILL OR PLAIN CONCRETE, AS DETERMINED AND INSPECTED BY A QUALIFIED GEOTECHNICAL ENGINEER.
5. REINFORCEMENT
   - A. REINFORCEMENT SHALL CONFORM TO THE FOLLOWING STANDARDS AND MATERIAL PROPERTIES:
     - I. DEFORMED BARS: ASTM A615 GRADE 60
   - B. WHERE DOWELS ARE INDICATED BUT NOT SIZED, PROVIDE DOWELS THAT MATCH SIZE AND LOCATION OF MAIN REINFORCEMENT AND LAP SPLICE WITH THE MAIN REINFORCEMENT.
   - C. UNLESS OTHERWISE NOTED, USE CLASS B LAP SPLICES.
   - D. REINFORCEMENT SHALL HAVE THE FOLLOWING CONCRETE PROTECTION (CLEAR COVER), UNLESS OTHERWISE NOTED:
     - I. CONCRETE CAST AGAINST AND PERMANENTLY EXPOSED TO EARTH: 3”
     - II. FORMED CONCRETE SURFACES TO BE EXPOSED TO EARTH OR WEATHER:
       - 2” (#6 BARS AND LARGER)
       - 1½” (#5 BARS AND SMALLER)
6. CONCRETE MATERIAL PROPERTIES
   - A. CONCRETE STRENGTH SHALL MEET THE FOLLOWING 28-DAY COMPRESSIVE STRENGTHS (f’c) UNLESS OTHERWISE NOTED:
     - 4500 PSI, NORMAL WEIGHT CONCRETE
   - B. CONCRETE TO HAVE SLUMP, AIR ENTRAINMENT, OTHER ADMIXTURES, ETC. IN ACCORDANCE WITH OWNER SPECIFICATIONS. AIR ENTRAINMENT SHALL BE BETWEEN 4.5 AND 7.5 PERCENT.
7. CAST IN PLACE CONCRETE
   - A. CONCRETE WORK SHALL CONFORM TO ALL REQUIREMENTS OF ACI 301, LATEST EDITION, SPECIFICATIONS FOR STRUCTURAL CONCRETE FOR BUILDINGS, EXCEPT AS MODIFIED BY SUPPLEMENTAL REQUIREMENTS CONTAINED IN THE FOLLOWING NOTES.
   - B. UNLESS OTHERWISE DETAILED OR NOTED, REINFORCING SHALL BE IN ACCORDANCE WITH “THE ACI DETAILING MANUAL, SP-66” & ACI 315 "DETAILS AND DETAILING OF CONCRETE REINFORCEMENT."
   - C. CHAMFER EXPOSED CORNERS OF CONCRETE SLAB AND WALLS 3/4".
   - D. ERECTION OF REINFORCED CONCRETE SHALL CONFORM TO THE LATEST EDITION OF ACI 117 "SPECIFICATION FOR CONCRETE CONSTRUCTION AND MATERIALS."
8. EMBEDDED ITEMS
   - A. ALL EMBEDDED PLATES AND ANGLES SHALL BE ASTM A36 MATERIAL AND HOT DIP GALVANIZED PER ASTM A123.
   - B. WELDING STUDS SHALL BE H4L HEADED CONCRETE ANCHORS AS MANUFACTURED BY NELSON STUD WELDING, INC., 1/2" DIAMETER x 4" LONG, TYP. UNLESS NOTED OTHERWISE.

DRAWING INDEX

S-1 GENERAL NOTES & DRAWING INDEX
S-2 SALT CONVEYOR PIT PLAN
S-3 SALT CONVEYOR PIT SECTIONS
S-4 SALT CONVEYOR PIT DETAILS
S-5 SALT CONVEYOR PIT DETAILS
S-6 SALT CONVEYOR PIT DETAILS
S-7 SALT CONVEYOR PIT DETAILS
S-8 SALT CONVEYOR PIT DETAILS



DRAWING NO.: S–1

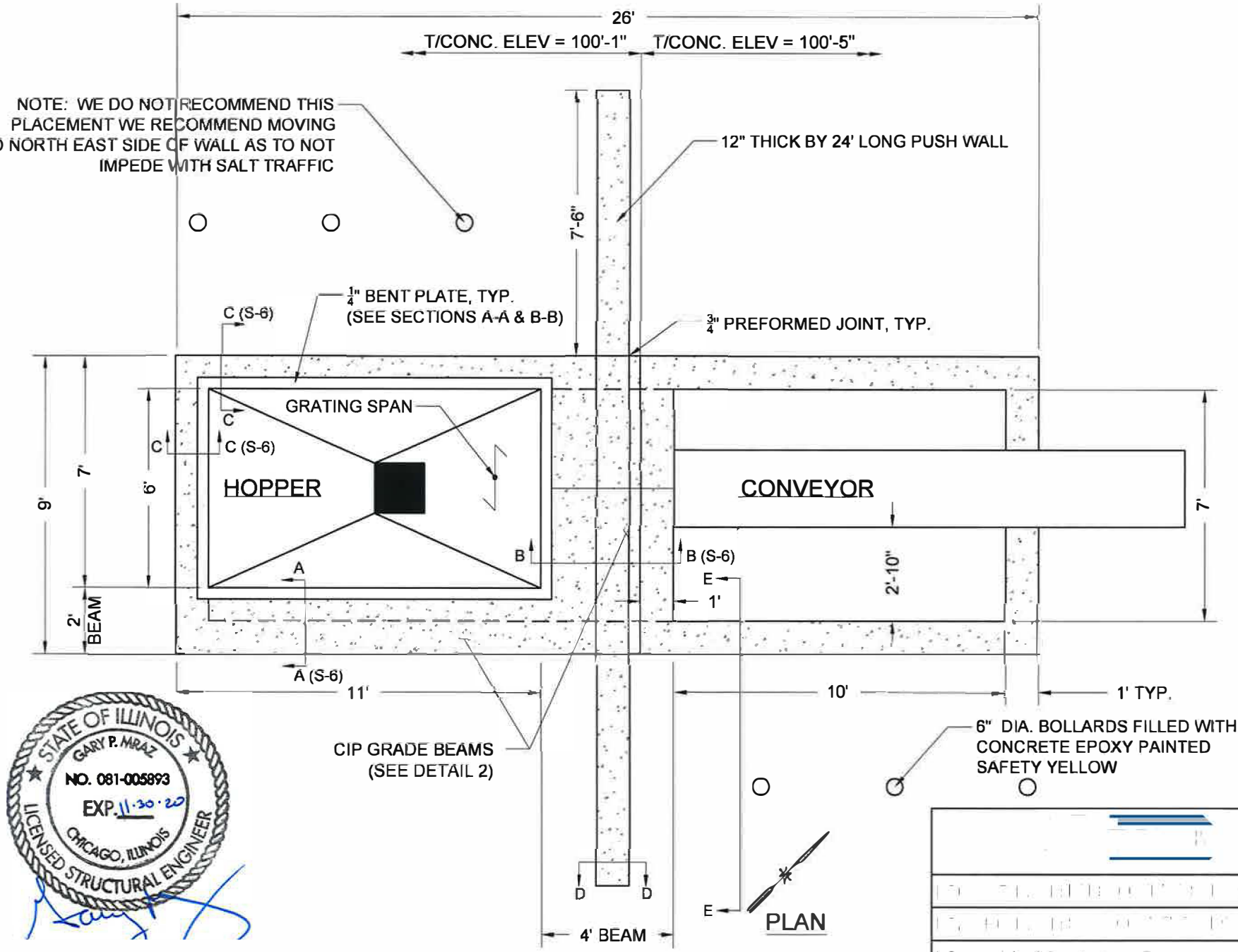

STATE OF ILLINOIS
GARY P. MRAZ
NO. 081-005893
EXP. 11-30-20
CHICAGO, ILLINOIS
LICENSED STRUCTURAL ENGINEER

NOTES:
1. FOR GENERAL NOTES, SEE DRAWING S-1.
2. EXISTING GRADE REFERENCE ELEV. APPROX. = 100'-0"

DRAWING NO.: S-2

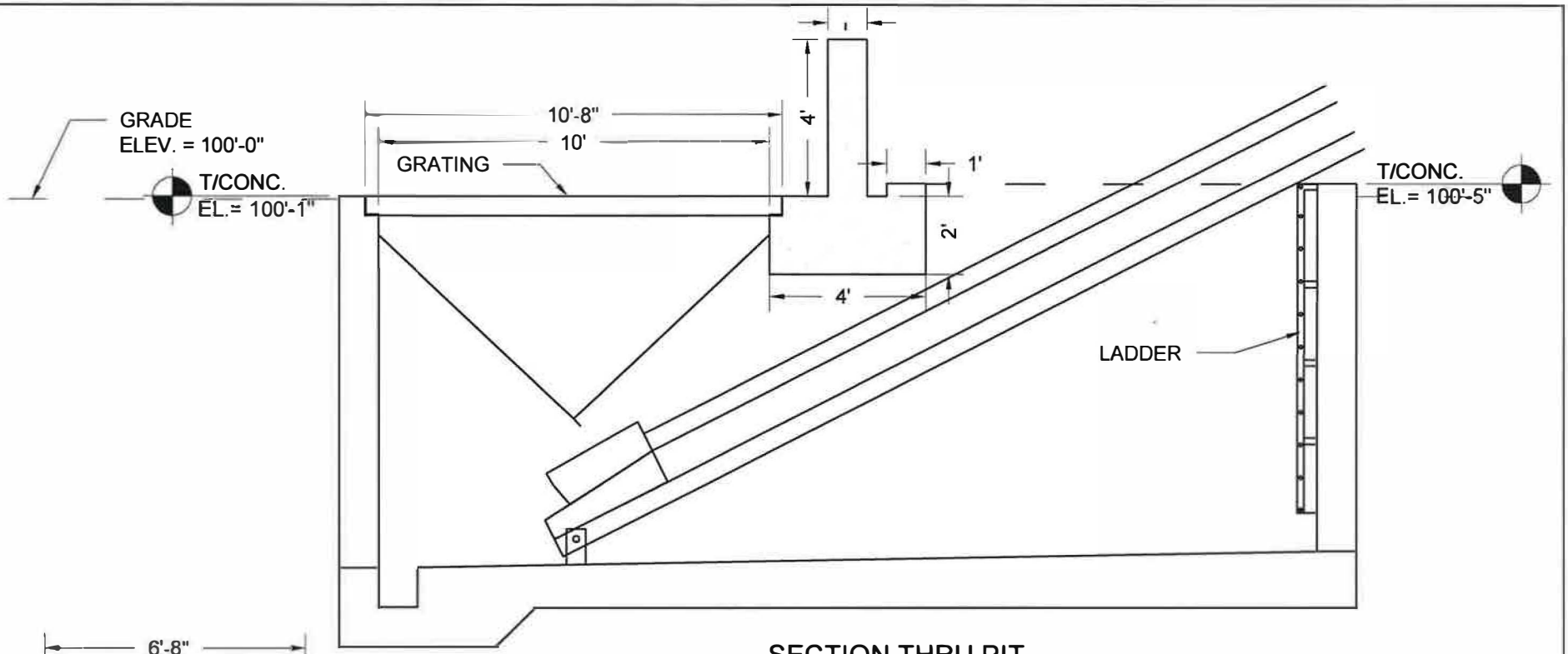

SECTION THRU PIT (LOOKING NORTH WEST)

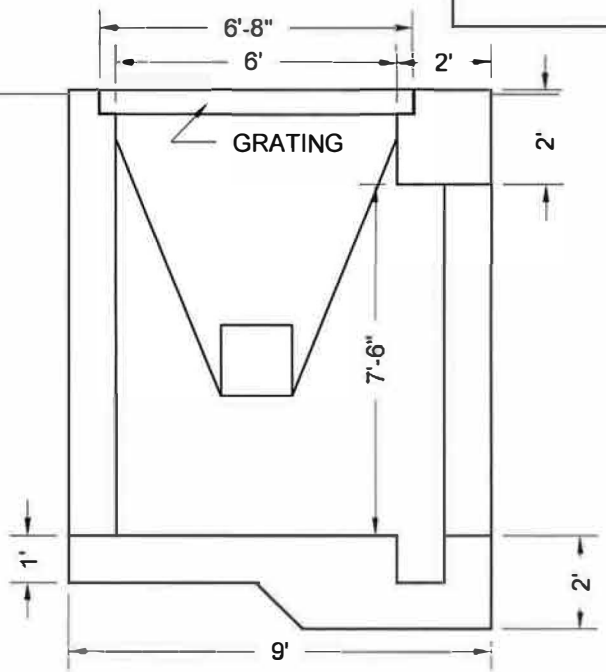

GRADE
ELEV. = 100'-0"

SECTION THRU PIT AT HOPPER (LOOKING SOUTH WEST)



NOTES:
1. FOR GENERAL NOTES, SEE DRAWING S-1.
2. EXISTING GRADE REFERENCE ELEV. APPROX. = 100'-0"

SCALE: 1/4"=1'

DRAWING NO.: S-3

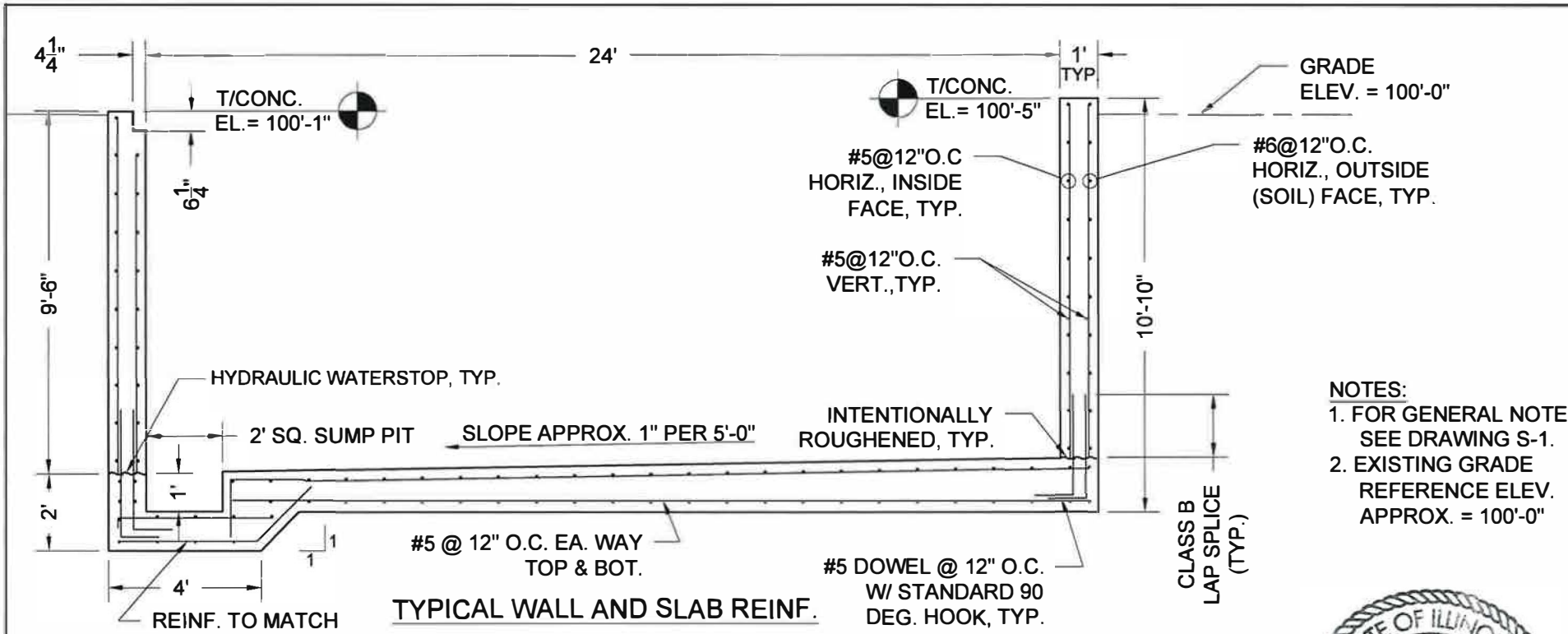

TYPICAL WALL AND SLAB REINF.

NOTES:
1. FOR GENERAL NOTES, SEE DRAWING S-1.
2. EXISTING GRADE REFERENCE ELEV. APPROX. = 100'-0"

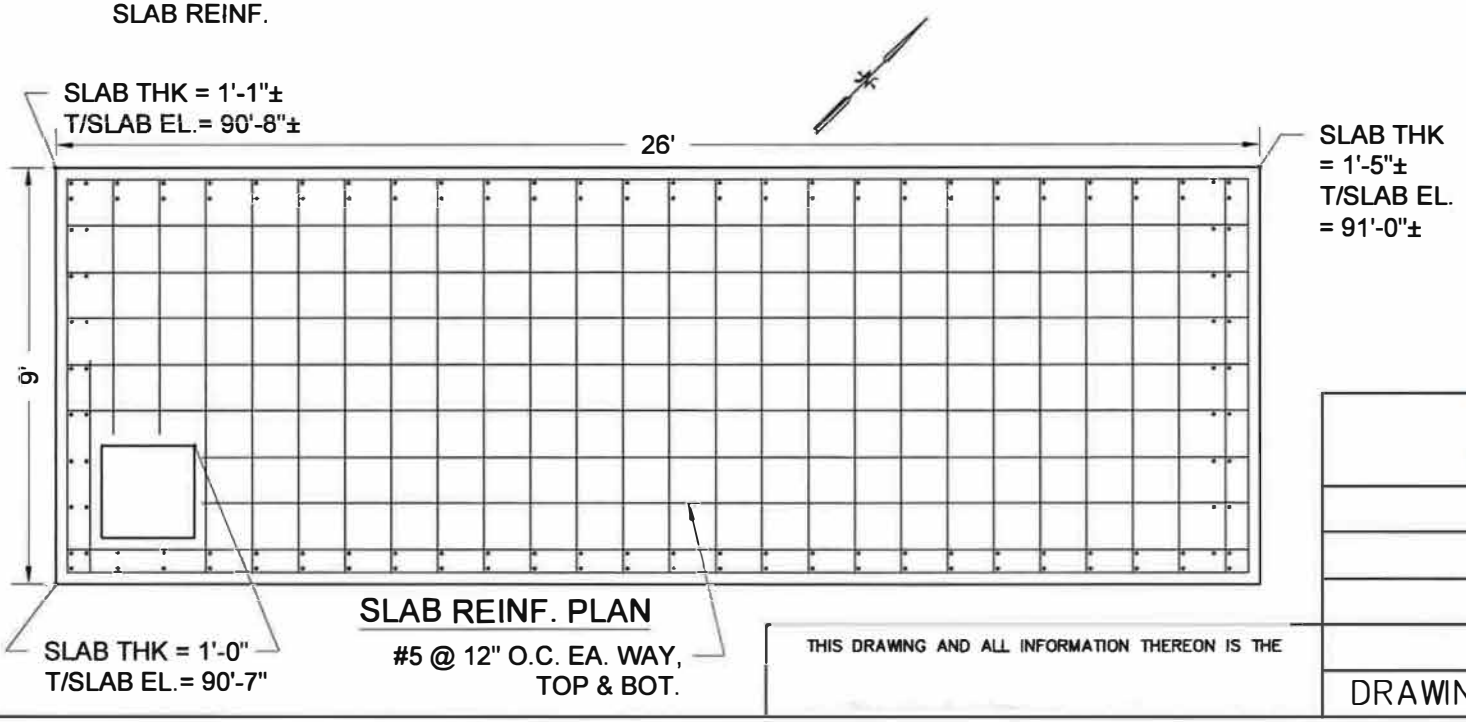

SLAB REINF. PLAN

STATE OF ILLINOIS
GARY P. MIAZ
NO. 081-005893
EXP. 11·30·20
CHICAGO, ILLINOIS
LICENSED STRUCTURAL ENGINEER

THIS DRAWING AND ALL INFORMATION THEREON IS THE

SCALE: 1/4"=1'

DRAWING NO.: S-4

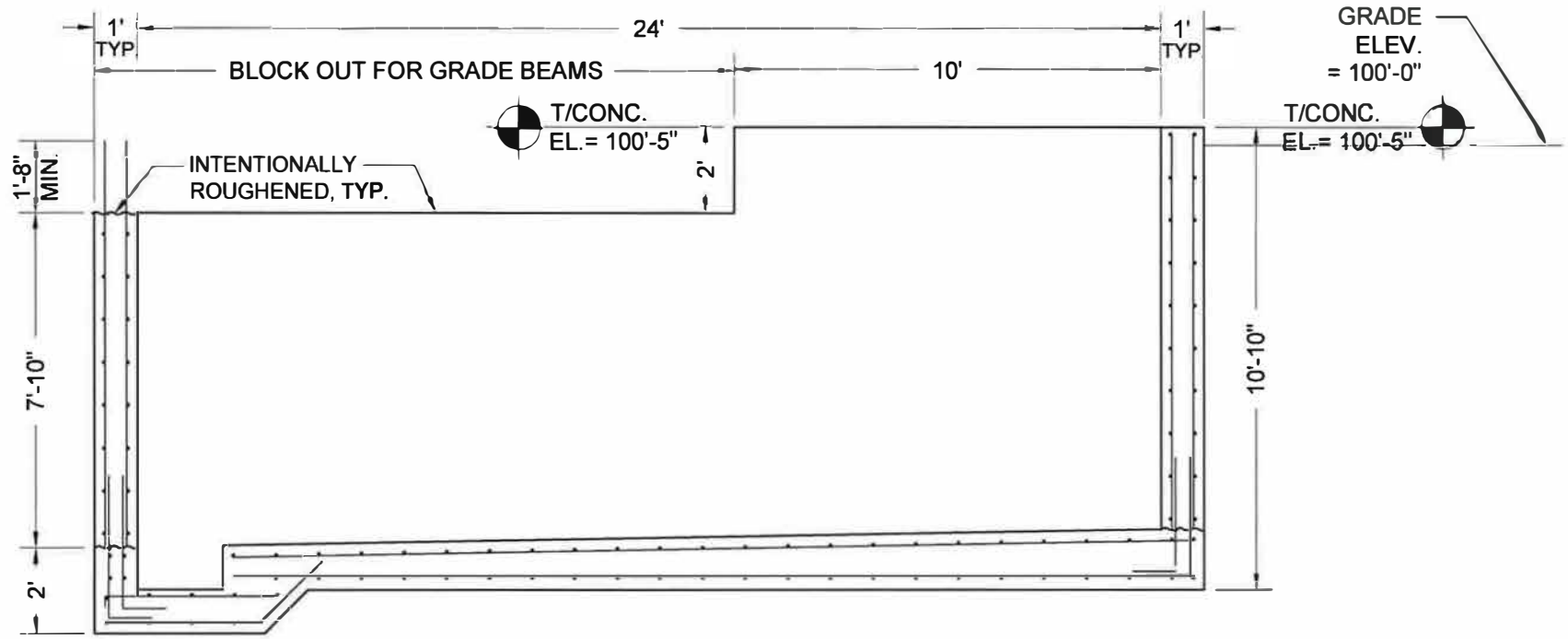

WALL BLOCKOUT FOR GRADE BEAMS

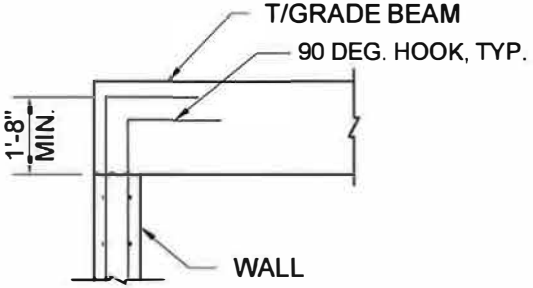

TYPICAL BAR EXTENSION DETAIL AT GRADE BEAMS

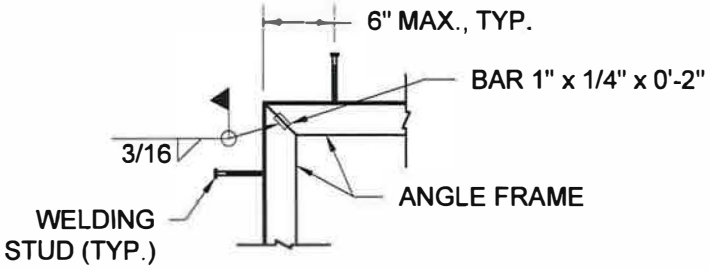

EMBEDDED PLATE TYPICAL CORNER DETAIL



NOTES:
1. FOR GENERAL NOTES, SEE DRAWING S-1.
2. EXISTING GRADE REFERENCE ELEV. APPROX. = 100'-0"

SCALE: NONE

DRAWING NO.: S-5

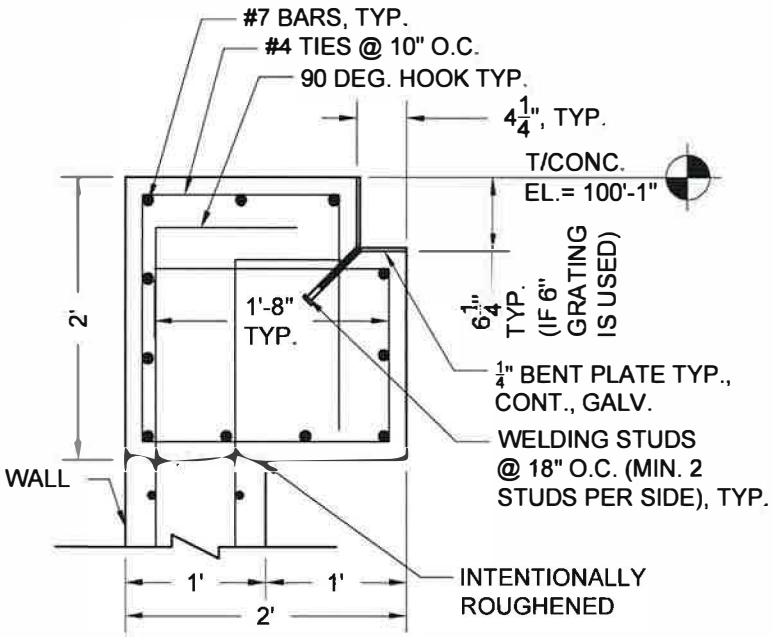

SECTION A-A: 2'X2' GRADE BEAM

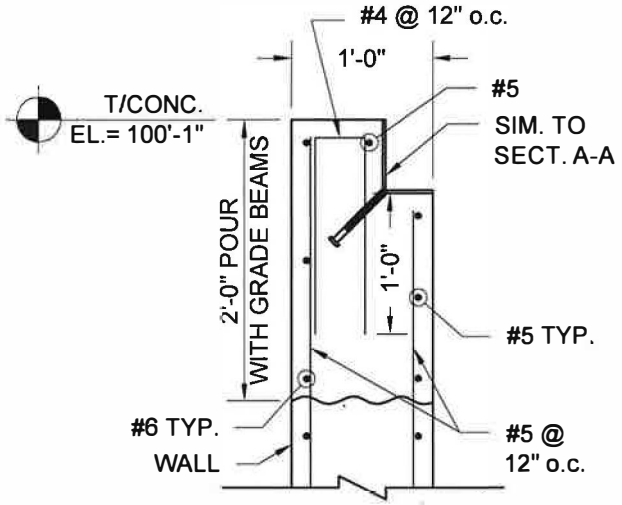

SECTION C-C

NOTES:
1. FOR GENERAL NOTES, SEE DRAWING S-1.
2. EXISTING GRADE REFERENCE ELEV. APPROX. = 100'-0"

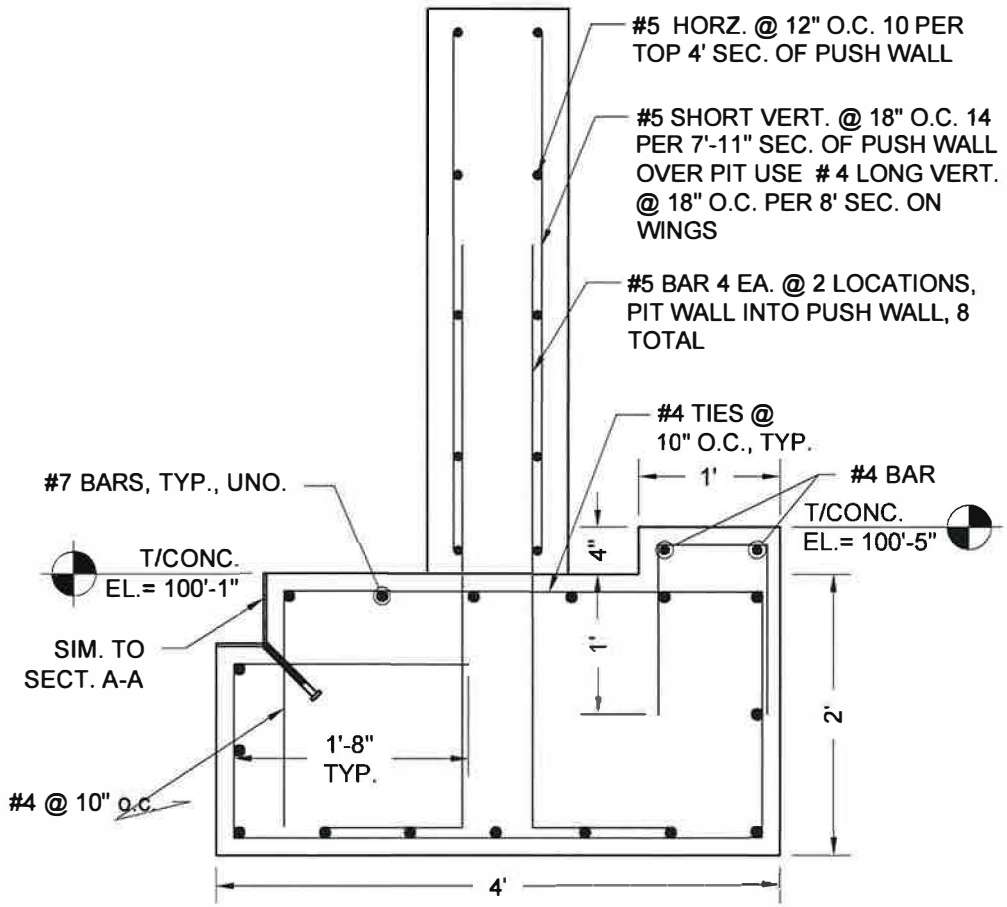

SECTION B-B: 4'X2' GRADE BEAM



SCALE: 3/4"=1'

DRAWING NO.: S-6

CONVEYOR SIDE HOPPER SIDE

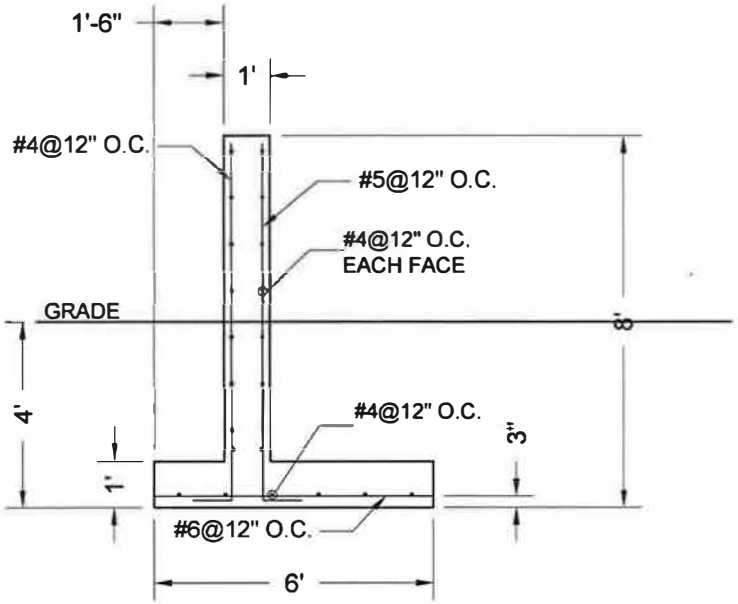

SECTION D-D

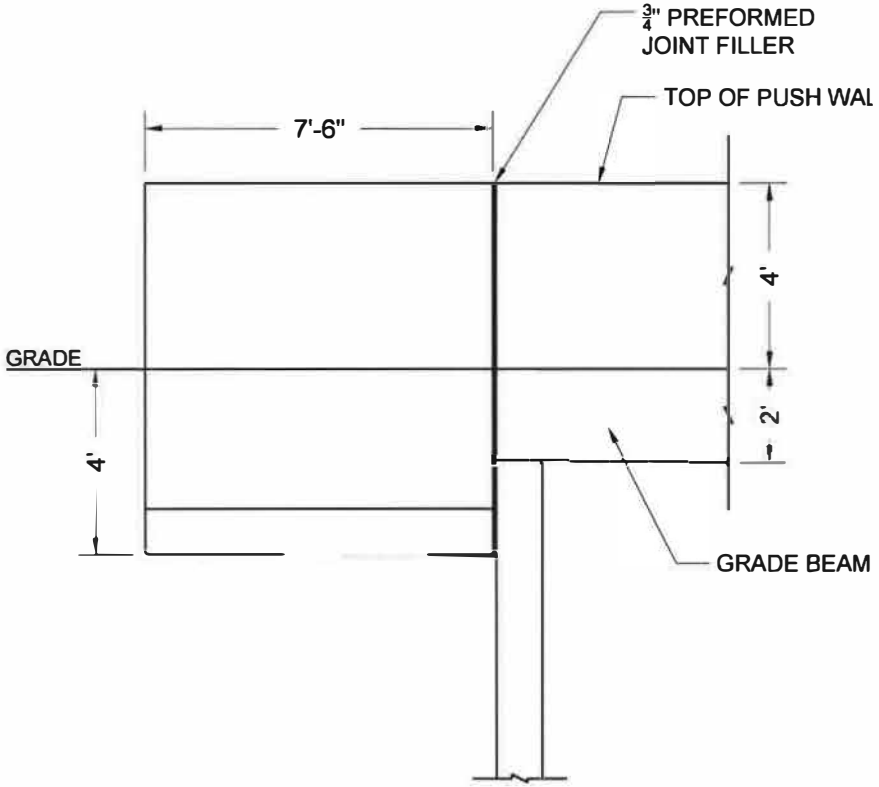

SECTION E-E



SCALE: NONE

DRAWING NO.: S-7

PLAN VIEW

NOTES:
1. STANDARD 90 DEG. HOOK
   = 7½" FOR #5 BARS
   = 9" FOR #6 BARS
2. CLASS B LAP SPLICE
   = 28" FOR #5 BARS
   = 33" FOR #6 BARS
   (IF MULTIPLE BAR SIZES, USE THE LONGER LAP SPLICE)

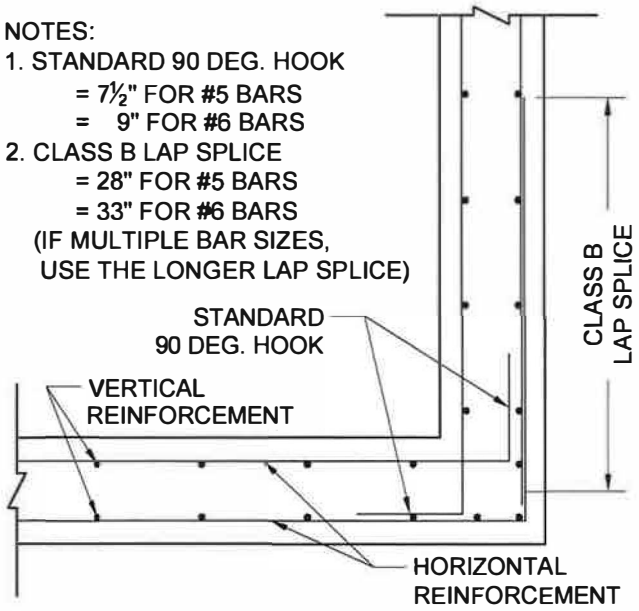

TYPICAL WALL CORNER REINFORCEMENT

(SCALE: NOT TO SCALE)



SCALE: 3/4"=1'

DRAWING NO.: S-8

VILLAGE OF SCHAUMBURG

AGENDA ITEM SUMMARY

Resolution No. R-26-_____A Resolution Authorizing the Village President and Village Clerk to Execute an Agreement for Traffic Signal Enhancements at Roselle Road and Hartford Drive with the Cook County Department of Transportation and Highways.
04/14/26
Village Board

Presenter: Justin Briski, Superintendent of Field Services
Lead Department: Engineering and Public Works

Account(s):	Budget:	Expense Request:
1014020-7405	$35,167	$35,167

The budget status for this request is: On Budget

Executive Summary:

The Intergovernmental Agreement (IGA) between Cook County and the Village of Schaumburg outlines the Village's financial responsibilities for the Roselle Road and Hartford Drive Traffic Signal Replacement Project. The Village is only responsible for the aesthetic enhancements requested, including the decorative sidewalk installation and the powder-coated black traffic signal. The Village must also fund 15% of the construction engineering costs associated with these items. The total estimated cost for these components is $35,167.

The Roselle Road and Hartford Drive Traffic Signal Replacement Project will modernize the existing intersection to enhance safety, accessibility, and operational performance. Work includes replacing the full traffic signal system including poles, mast arms, signal heads, controller cabinet, wiring, pedestrian countdown signals, pedestrian pushbuttons, vehicle detection, and relocating the existing emergency vehicle preemption equipment. The project also updates pavement markings and incorporates the decorative paver sidewalk and black powder-coated colored signal equipment. These improvements address aging infrastructure, improve ADA compliance, and bring the intersection up to current standards.

Upon project completion, the Village will assume 50% of the ongoing maintenance and electrical energy costs for the new traffic signal system. In addition, the Village is fully responsible for all future repainting of the traffic signal including warranty-related work using IDOT prequalified electrical contractors, in addition to maintenance of the decorative pavers. These obligations ensure proper long-term maintenance of the shared traffic signal infrastructure and the Village-requested aesthetic improvements.

Recommended Action:

The Village Manager recommends the Engineering and Public Works Committee recommend the Village Board authorize the Village President and Village Clerk to execute an agreement for the Traffic

Signal Enhancements at Roselle Road and Hartford Drive with the Cook County Department of Transportation and Highways, and approve the required Resolution.

ATTACHMENTS:

- Resolution
- Intergovernmental Agreement
- Engineering Plans

RESOLUTION NO. R-26-_____

A RESOLUTION AUTHORIZING THE VILLAGE PRESIDENT AND VILLAGE CLERK TO EXECUTE AN AGREEMENT FOR TRAFFIC SIGNAL ENHANCEMENTS AT ROSELLE ROAD AND HARTFORD DRIVE WITH THE COOK COUNTY DEPARTMENT OF TRANSPORTATION AND HIGHWAYS

WHEREAS, the President and Board of Trustees wish to enter into an Intergovernmental Agreement for the Traffic Signal Enhancements at Roselle Road and Hartford Drive with the Cook County Department of Transportation and Highways; and

WHEREAS, the Village of Schaumburg (the "Village") is a municipality lawfully organized and existing under the Constitution and the laws of the State of Illinois; and

WHEREAS, it would be in the best interests of the citizens of Schaumburg to execute the attached Agreement, Exhibit "A".

NOW, THEREFORE, BE IT RESOLVED BY THE PRESIDENT AND BOARD OF TRUSTEES OF THE VILLAGE OF SCHAUMBURG:

SECTION ONE: That the Village President and Village Clerk be and hereby are authorized and directed to execute the attached Agreement, Exhibit "A", between the Village of Schaumburg and Cook County Department of Transportation and Highways.

SECTION TWO: That the Village President and Village Clerk be and hereby are authorized to sign any documents in furtherance of this Resolution.

SECTION THREE: That this Resolution shall be in full force and effect after passage and approval as required by law.

AYES:

NAYS:

ABSENT:

PASSED AND APPROVED this _____ day of _____, 2026.

_____
Village President

ATTEST:

_____
Village Clerk

INTERGOVERNMENTAL AGREEMENT

County of Cook

Traffic Signal Replacement (HSIP)
Package #2

Roselle Road at Hartford Drive

Village of Schaumburg

Section: 25-HSIP2-00-TL

This Intergovernmental Agreement (Agreement) is made and entered into this _____ day of _____, 2026, by and between the County of Cook, a body politic and corporate of the State of Illinois (County), acting by and through its Department of Transportation and Highways (Department), and the Village of Schaumburg, a municipal corporation of the State of Illinois (Village). The County and Village are sometimes referred to herein individually as a "Party" and collectively as the "Parties."

RECITALS

WHEREAS, in order to facilitate the free flow of traffic and ensure the safety of pedestrians, bicyclists, and the motoring public, the Parties desire to enter into an intergovernmental partnership to realize traffic signal replacement improvements at the intersection of Roselle Road and Hartford Drive (Project);

WHEREAS, the anticipated scope of work for the Project includes, but is not limited to, removal of the existing median and replacement with Portland Cement Concrete (PCC) pavement, replacement of the traffic signal infrastructure including poles, posts, mast arms, cable, conduit, traffic signal heads, cabinet controller, pedestrian pushbuttons, pedestrian signals, and vehicle detection systems, installation of uninterrupted power supply (UPS) battery back-up systems, installation of pedestrian countdown timers and accessible pedestrian signal (APS) pushbuttons at crosswalk termini, pavement marking and signing, relocation of the existing Emergency Vehicle Preemption (EVP) system, and aesthetic enhancements including a black-colored traffic signal system and decorative sidewalk;

WHEREAS, the County has secured federal funding for the Project through the Highway Safety Improvement Program (HSIP) in an amount not to exceed $719,280;

WHEREAS, the County, by virtue of its powers as set forth in the Counties Code, 55 ILCS 5/1-1 et seq., and the Illinois Highway Code, 605 ILCS 5/1-101 et seq., is authorized to enter into this Agreement;

WHEREAS, the Village, by virtue of its powers as set forth in the Illinois Municipal Code, 65 ILCS 5/1-1-1 et seq., is authorized to enter into this Agreement; and

WHEREAS, this Agreement is further authorized under Article VII, Section 10 of the Illinois Constitution and by the provisions of the Intergovernmental Cooperation Act, 5 ILCS 220/1 et seq.

NOW, THEREFORE, in consideration of the mutual covenants contained herein, and for other good and valuable consideration, the receipt of which is hereby acknowledged, the Parties agree as follows:

SECTION 1. CONSTRUCTION

A. Bid Documents

The County shall prepare bid documents for the Project, including, but not limited to, minimum contractor qualifications, plans and specifications, special provisions, and cost estimates.

B. Construction Contract

The County shall award and execute a construction contract for all labor and materials required to complete the Project. In awarding and administering the contract, the County shall comply with all applicable federal, state, and local laws and regulations.

C. Construction Engineering Services

The County shall perform, or cause to be performed, construction engineering services for the Project.

D. Lead Agency

The County shall assume overall responsibility for the Project, including securing all required permits, easements, and agreements from relevant agencies and utility owners before the start of construction.

E. Pre-Construction and Progress Meetings

The County shall provide the Village with at least 14 calendar days' written notice before the pre-construction meeting for the Project and at least 7 calendar days' notice before construction begins. A representative from the Village shall attend the pre-construction meeting and be available for all other construction progress meetings as needed.

F. Public Outreach

The County shall manage all public notification efforts regarding the scope, timing, and duration of the Project.

G. Right of Inspection

The Village and its authorized agents shall have reasonable access for inspection during Project construction, provided such access does not unreasonably interfere with or delay the contractor's work. The County shall cooperate with the Village to address any construction or engineering concerns. Disputes shall be resolved in accordance with Section 5.H. of this Agreement.

H. Final Inspection

The County shall provide the Village with at least 14 calendar days' written notice before the final Project inspection. The Village shall submit final punch list items to the County at least 7 calendar days before the date of the final inspection.

I. Village Permits

The County shall apply for all necessary access and temporary use permits from the Village. The Village shall not unreasonably withhold such permits and shall issue them within a reasonable timeframe (e.g., 30 days) and without charge to the County.

SECTION 2. FINANCIAL

A. Cost Estimate

Estimated construction and construction engineering costs for the Project are $993,799.

B. HSIP Grant Funds

The Project has been awarded federal funding through the Highway Safety Improvement Program (HSIP) in an amount not to exceed $719,280. All HSIP grant funds received shall reduce the County's net Project costs.

C. County Cost Participation

The County shall pay all actual construction and construction engineering costs for the Project, less any HSIP grant funds allocated to and received by the County, and subject to reimbursement by the Village as provided herein.

D. Village Cost Participation

The Village shall reimburse the County for the following Project costs:

i. All actual costs associated with the installation of decorative sidewalk;

ii. All actual costs associated with powder coating the new traffic signal system to achieve the black-colored aesthetic enhancement; and

iii. Related construction engineering costs for the work set forth above in this subsection 2.D., which shall be calculated as 15% of the actual construction/installation costs that are to be reimbursed to the County by the Village.

The total estimated cost to the Village under this Agreement is $35,167.

E. Village Reimbursement

The Village shall reimburse the County for the Village's share of Project costs as funds are expended by the County. The County may seek reimbursement from the Village not more frequently than on a monthly basis. The Village shall pay invoices from the County within 45 calendar days of receipt thereof.

F. Substitutions/Substitute Work

Either Party may request in writing that bid work or materials be substituted with different work or materials. Provided that the substitute work and/or materials do not unreasonably delay the Project schedule, the County shall cause said substitute work

and/or materials to be included in the Project. Each Party shall pay the costs of substitutions for their associated work items.

G. Additional Work

Either Party may request in writing that additional work be added to the Project. Provided that the additional work does not unreasonably delay the Project schedule, the County shall cause said additional work and/or materials to be included in the Project. Additional work shall be paid for by force account or agreed unit price. Each Party shall pay the costs of additional work for their associated work items.

H. Funding Breakdown

An estimated funding breakdown for the Project is incorporated into and made a part of this Agreement and attached as Exhibit A.

SECTION 3. TERM AND TERMINATION

A. Term

This Agreement shall commence as of the date of final execution by both Parties and shall continue until completion of the Project and final reimbursement to the County by the Village.

B. Termination

This Agreement may be terminated prior to the expiration of its term by mutual agreement of the Parties in a writing signed by the Department's Superintendent and an authorized representative of the Village. This Agreement may also be terminated by either Party upon 90 calendar days' written notice sent to the other Party in accordance with Section 5.T. of this Agreement. If the Village elects to terminate this Agreement prior to its expiration, the Village shall pay the County for its share of Project costs spent or incurred by the County up to the date such notice is provided to the County by the Village.

SECTION 4. POST-PROJECT MAINTENANCE

A. Definition

As used herein, the terms 'maintenance' or 'maintain' mean keeping the facility being maintained in safe, functional, and code-compliant condition, with good and sufficient structural integrity, operational performance, and aesthetic appearance. Such

maintenance includes both preventive and corrective activities and full responsibility for the construction, removal, and/or replacement of the maintained facility and associated infrastructure when needed, all in accordance with applicable standards, codes, and regulations

B. Bicycle and Pedestrian Facilities

Upon completion of the Project, the Village shall own, operate, and maintain all sidewalks and/or multi-use paths constructed or improved as part of the Project, in compliance with the Americans with Disabilities Act, Public Right-of-Way Accessibility Guidelines, and all other applicable federal and state laws and regulations. Such facilities include the decorative paver sidewalk at the intersection of Roselle Road and Hartford Drive.

The Village shall defend, indemnify, and hold harmless the County, its commissioners, officials, officers, employees, agents, and representatives from and against any and all costs, expenses, attorneys' fees, losses, damages, claims, demands, suits, actions, or proceedings of any kind arising out of or relating to the use, repair, and/or maintenance of all sidewalks and/or multi-use paths constructed or improved as part of the Project, including the decorative paver sidewalk at the intersection of Roselle Road and Hartford Drive.

C. EVP System

Upon completion of the Project, the Village shall own and be responsible for 100% of the maintenance costs for the EVP system relocated on the traffic signals at the intersection of Roselle Road and Hartford Drive. The Village acknowledges that it will not have access to or on the traffic signals at these locations. The County shall monitor the operational status of the EVP system at no cost to the Village, and the County shall inform the Village should it detect fault with the operation of the EVP system. In the event the County detects fault with the operation of any EVP system, the Village shall enter into an agreement with a contractor prequalified by the Illinois Department of Transportation (IDOT) in the Electrical category, for repair or removal and replacement of the EVP system.

D. Roadways

Upon completion of the Project, the County shall continue to own, operate, and maintain those portions of Roselle Road under its established jurisdictional authority, including, but not limited to, any existing or future County-owned traffic signals, signage, pavement markings, landscaping seed and sod, storm sewers and/or drainage facilities on the

County right-of-way, but excluding landscaping beyond seed and sod (e.g., trees and shrubs) and any Village-owned utilities on the County right-of-way (e.g., sanitary sewer and water main).

Upon completion of the Project, the Village shall continue to own, operate, and maintain those portions of Hartford Drive under its established jurisdictional authority, including, but not limited to, any existing or future Village-owned utilities, signage, pavement markings, landscaping, storm sewers and/or other drainage facilities on the Village right-of-way. The Village shall also own and maintain any landscaping beyond seed and sod (e.g., trees and shrubs) along Roselle Road and any Village-owned utilities on the County right-of-way (e.g., sanitary sewer and water main).

E. Traffic Signals

Upon completion of the Project, the County shall own, operate, energize, and maintain the traffic signals at the intersection of Roselle Road and Hartford Drive, including any interconnect system components.

The financial responsibilities of the Parties for maintenance and electrical energy costs for the operation of these traffic signals are as follows:

Party	***Maintenance***	***Electrical Energy***
Cook County	50%	50%
Village of Schaumburg	50%	50%

The Village shall pay its share of maintenance costs for the traffic signals directly to the County. The Village shall pay its share of electrical energy costs for the traffic signals directly to ComEd. Payment for the maintenance costs shall be due within 30 calendar days of receipt of the quarterly statement issued to the Village by the County.

F. Traffic Signal Painting Requirements

Village Financial Responsibilities

The Village assumes full financial responsibility (100%) for all painting-related costs for the traffic signal at Roselle Road and Hartford Drive, including:

- Initial painting/powder coating of the proposed traffic signal installation
- All future painting and maintenance of traffic signal equipment
- Warranty repair work and related claims
- Painting/powder coating of replacement traffic signal components

Contractor Requirements

For all future painting work, touch-ups, and painting-related repairs, the Village must engage contractors who are prequalified by IDOT in the Electrical category and the Village must secure a permit from CCDOTH. All new equipment must be galvanized on both interior and exterior surfaces prior to painting, in accordance with current County traffic signal specifications.

County Oversight and Standards

The County retains comprehensive oversight authority, including the right to:

- Inspect all preparation and painting processes
- Reject unsatisfactory workmanship
- Replace damaged equipment with standard County traffic signal materials
- Require of the Village repainting of any installation or component deemed necessary, or removal of the paint as determined by the County.

Response Timeline

Upon notification of required painting work, the Village has 30 calendar days to issue a work order. All work must be performed by IDOT-prequalified contractors in the Electrical category.

Equipment Specifications

- **Standard Color:** All traffic signal equipment shall be painted black
- **Exceptions:** The following components shall remain unpainted:
    - Traffic signal control cabinets
    - Traffic signal heads
    - Pedestrian signal head latching devices: If these latching devices are painted and the doors cannot be opened, or if the latching devices break off during use as a result of being painted, the Village will be responsible to hire an IDOT prequalified contractor in the Electrical category to replace any impacted piece of traffic signal equipment (e.g., cabinet, signal head, pedestrian signal head)

G. Survives Termination

The Parties' maintenance obligations described in this section shall survive termination or expiration of this Agreement.

SECTION 5. GENERAL CONDITIONS

A. Audit and Document Retention

Each Party, to the extent applicable, shall maintain adequate books, records, and supporting documentation related to this Agreement and any associated expenditures for at least 3 years after its completion. Such records shall be available for review and audit by the other Party and their respective internal or external auditors. The Parties shall cooperate fully with any audit and provide access to all relevant materials.

B. Binding Agreement

This Agreement shall bind and benefit the Parties and their permitted successors and assigns. No Party may assign its obligations under this Agreement without the prior express written consent of the other Party, which shall not be unreasonably withheld or delayed.

C. Compliance with Laws, Rules, and Regulations

Each Party shall comply with all applicable federal, state, and local laws, rules, and regulations, as amended from time to time, in performing its obligations under this Agreement.

D. Conflict with Exhibits

In the event of a conflict between the text of this Agreement and any attached exhibit, the text of the Agreement shall prevail.

E. Cooperation

The County and Village agree to cooperate fully with one another at all times in the implementation of this Agreement.

F. Counterparts

This Agreement may be executed in counterparts, each of which shall be deemed an original. All such counterparts together shall constitute one and the same instrument.

G. County Section Number

The Project is designated as County section number 25-HSIP2-00-TL. All Project-related submittals and correspondence shall reference this County section number.

H. Dispute Resolution

If a dispute, claim, or disagreement arises from the performance of this Agreement, the Parties shall consult in good faith to resolve it. If resolution cannot be reached, the decision of the Department's Superintendent shall be final and binding, unless otherwise provided by law.

I. Effective Date

The Effective Date of this Agreement shall be the date it is fully executed by authorized signatories of both Parties and approved by their respective corporate authorities.

J. Electronic or Digital Signatures

This Agreement may be executed by electronic or digital signatures, which shall have the same legal effect as handwritten signatures, pursuant to the Uniform Electronic Transactions Act (815 ILCS 333/1 et seq.) or any successor law.

K. Entire Agreement

This Agreement represents the complete understanding between the Parties regarding its subject matter and supersedes all prior agreements or understandings.

L. Force Majeure

Neither Party shall be liable for failing to fulfill any obligation under this Agreement due to events beyond their reasonable control and not caused by such their fault or negligence, including, but not limited to, acts of God, war, natural disasters, labor actions, epidemics, pandemics, or civil unrest.

M. Governing Law and Venue

This Agreement shall be governed exclusively by the laws of the State of Illinois. The Parties irrevocably submit to the exclusive jurisdiction of the Circuit Court of Cook County or the U.S. District Court for the Northern District of Illinois for any proceedings arising from this Agreement.

N. Interpretation

Headings are for reference only and do not affect the meaning of the provisions. References to exhibits or documents include any lawful amendments or supplements. References to persons or entities include successors in accordance with this Agreement.

O. Liability

Subject to Section 4.A. herein, no official, officer, employee, attorney, agent, or assign of either Party will be liable for any negligent or wrongful act chargeable to the other unless such liability is imposed by a court of competent jurisdiction. The County assumes no liability for the actions of the Village and its officials, officers, employees, attorneys, or agents under this Agreement. The Village assumes no liability for the actions of the County and its officials, officers, employees, attorneys, or agents under this Agreement. Each Party agrees to be solely responsible for liability, suits, losses, judgments, damages, or other demands imposed upon it as a result of its own actions or omissions in the performance of its obligations specified in this Agreement. In the event of a claim for any wrongful or negligent act, each Party will bear the cost of its own defense.

P. Modifications

No change or modification to this Agreement shall be valid unless made in writing and signed by the Department's Superintendent and an authorized representative of the Village.

Q. No Individual or Personal Liability

Actions and representations under this Agreement are taken in official capacities only, and no individual affiliated with either Party shall incur personal liability in connection with the Agreement.

R. No Third-Party Beneficiaries

This Agreement is solely between the Parties and does not create any rights or obligations for third parties, including agents, contractors, or consultants of either Party.

S. Notices

All notices under this Agreement shall be in writing and delivered personally, by U.S. Mail (certified, registered, or first-class) or via electronic mail to the following:

To the County:
Cook County Department of Transportation and Highways
Superintendent
Attn: Jennifer "Sis" Killen, P.E., PTOE
69 W. Washington Street, 24th Floor
Chicago, IL 60602
E-mail: jennifer.killen@cookcountyil.gov

To the Village:
Village of Schaumburg
Director of Engineering and Public Works
Attn: Mike Hall
714 S. Plum Grove Road
Schaumburg, IL 60193
E-mail: mhall@schaumburg.com

T. Recitals

The recitals at the beginning of this Agreement are incorporated herein and form an integral part of the Agreement.

U. Severability

If any provision of this Agreement is deemed invalid or unenforceable, the remainder shall remain in full force and effect, and the invalid portion shall be interpreted to best reflect the original intent of the Parties.

V. Waivers of Default

No waiver of a breach or provision shall be effective unless in writing, nor shall it be construed as a waiver of any future breach or provision.

W. Warranties and Representations

Each Party represents and warrants that it is duly authorized to execute and perform this Agreement in accordance with its terms.

(signature page to follow)

IN WITNESS WHEREOF, the Parties have executed this Agreement on the dates indicated.

EXECUTED BY COUNTY OF COOK:

_____
Toni Preckwinkle
President
Cook County Board of Commissioners

This _____ day of _____, _____

ATTEST: _____
County Clerk

EXECUTED BY VILLAGE OF SCHAUMBURG:

_____
Tom Dailly
Mayor

This _____ day of _____, _____

ATTEST: _____
Village Clerk

RECOMMENDED BY:

_____
Jennifer "Sis" Killen, P.E., PTOE
Superintendent
County of Cook
Department of Transportation and Highways

APPROVED AS TO FORM:
Eileen O'Neill Burke, State's Attorney

By: _____
Assistant State's Attorney

Exhibit A

Estimated Funding Breakdown for Roselle Rd. and Hartford Dr.

ITEM	HSIP GRANT	VILLAGE	COUNTY	TOTAL
Construction	$719,280	$30,580	$114,313	$864,173
Construction Engineering	-	$4,587	$125,039	$129,626
Total	$719,280	$35,167	$239,352	$993,799

100% SUBMITTAL
JANUARY 23, 2026

STATE OF ILLINOIS
COUNTY OF COOK
DEPARTMENT OF TRANSPORTATION AND HIGHWAYS

TRAFFIC SIGNAL REPLACEMENT (HSIP) PACKAGE #2

LAKE COOK ROAD AT OLD HICKS ROAD
ROSELLE ROAD AT HARTFORD DRIVE
ROBERTS ROAD AT 103RD STREET
VOLLMER ROAD AT RIDGELAND AVENUE

SECTION 23-HSIP2-00-TL
FEDERAL PROJECT NO.: TBD
STATE JOB NO.: TBD

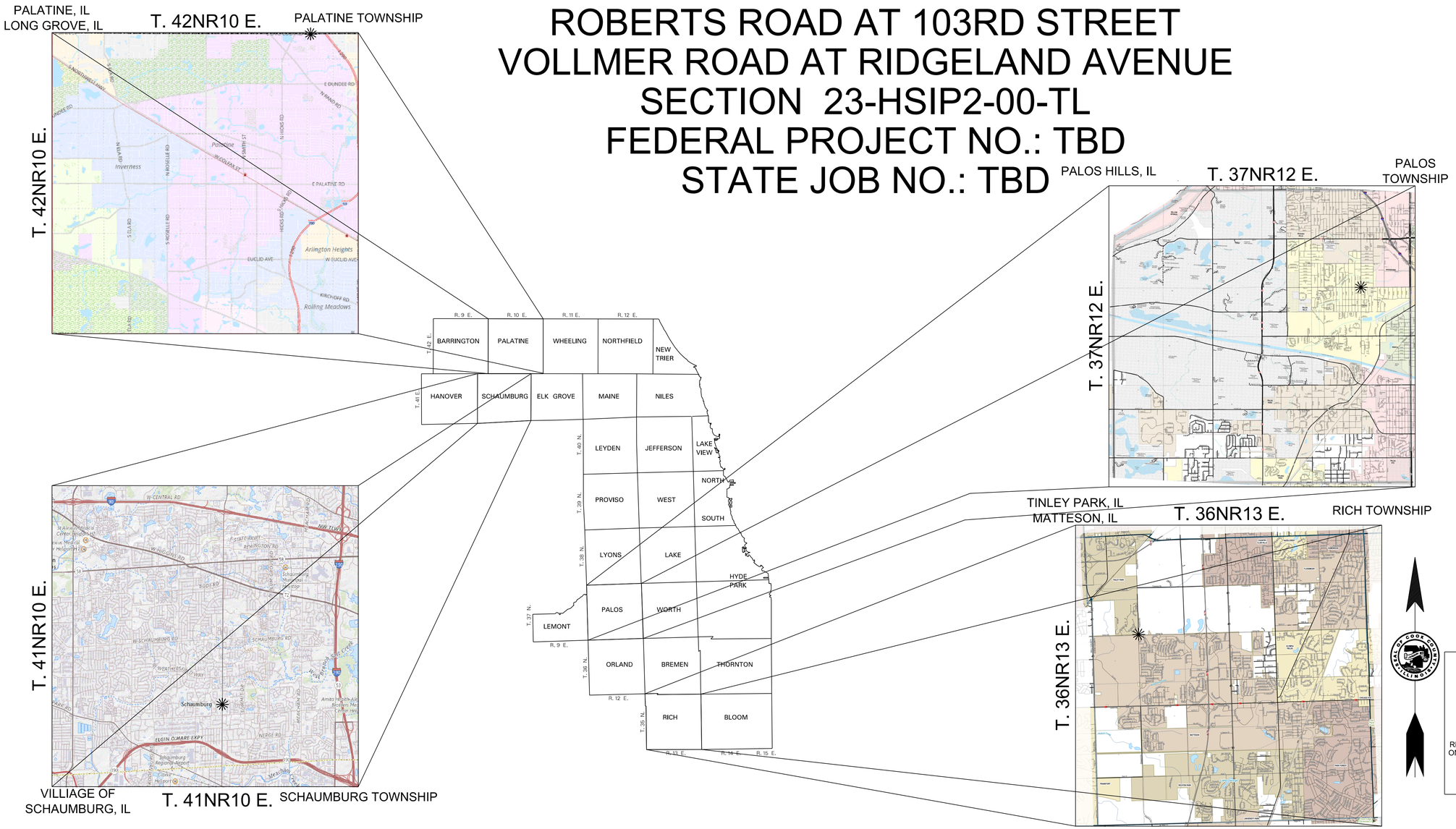

LAKE COOK RD
DESIGN DESIGNATION - SRA
ADT (2022) - 39,000 - (PORTLAND CEMENT CONCRETE)
DESIGN SPEED 45 M.P.H.
GROSS LENGTH = 2,500 FEET = 0.47 MILES
NET LENGTH = 2,214 FEET = 0.42 MILES

OLD HICKS RD
DESIGN DESIGNATION - LOCAL ROAD
ADT (2022) - 3,600 - (HOT MIX ASPHALT)
DESIGN SPEED 25 M.P.H.
GROSS LENGTH = 300 FEET = 0.06 MILES
NET LENGTH = 262 FEET = 0.05 MILES

HARTFORD DR
DESIGN DESIGNATION - MINOR ARTERIAL
ADT (2019) - 5,100 - (PORTLAND CEMENT CONCRETE)
DESIGN SPEED 25 M.P.H.
GROSS LENGTH = 640 FEET = 0.12 MILES
NET LENGTH = 640 FEET = 0.12 MILES

ROSELLE RD
DESIGN DESIGNATION - MAJOR COLLECTOR
ADT (2019) - 32,300 - (PORTLAND CEMENT CONCRETE)
DESIGN SPEED 50 M.P.H.
GROSS LENGTH = 750 FEET = 0.14 MILES
NET LENGTH = 750 FEET = 0.14 MILES

ROBERTS RD
DESIGN DESIGNATION - MINOR ARTERIAL
AADT (2019) - 23,000 - (PORTLAND CEMENT CONCRETE)
DESIGN SPEED 40 M.P.H.
GROSS LENGTH = 1,060 FEET = 0.20 MILES
NET LENGTH = 1,060 FEET = 0.20 MILES

103RD ST
DESIGN DESIGNATION - MAJOR COLLECTOR
AADT (2019) - 18,000 - (PORTLAND CEMENT CONCRETE)
DESIGN SPEED 40 M.P.H.
GROSS LENGTH = 1,415 FEET = 0.27 MILES
NET LENGTH = 1,415 FEET = 0.27 MILES

VOLLMER RD
DESIGN DESIGNATION - MINOR ARTERIAL
ADT (2019) - 10,600 - (PORTLAND CEMENT CONCRETE)
DESIGN SPEED 50 M.P.H.
GROSS LENGTH = 975 FEET = 0.18 MILES
NET LENGTH = 975 FEET = 0.18 MILES

RIDGELAND AVE
DESIGN DESIGNATION - MAJOR COLLECTOR
ADT (2019) - 4,700 - (PORTLAND CEMENT CONCRETE)
DESIGN SPEED 50 M.P.H.
GROSS LENGTH = 840 FEET = 0.16 MILES
NET LENGTH = 840 FEET = 0.16 MILES

THE CONTRACTOR'S ATTENTION IS DIRECTED
TO TELEPHONE J. U. L. I. E. AT 1-800-892-0123
FOR ALL UTILITY LOCATIONS

COUNTY OF COOK
DEPARTMENT OF TRANSPORTATION AND HIGHWAYS

APPROVED _____ 20__

_____

APPROVED _____ 20__

_____
CHIEF ENGINEER OF DESIGN

APPROVED _____ 20__

_____
SUPERINTENDENT

STATE OF ILLINOIS
DEPARTMENT OF TRANSPORTATION

PASSED _____ 20__

_____
DISTRICT ENGINEER OF LOCAL ROADS AND STREETS

RELEASED FOR BID
ON LIMITED REVIEW _____ 20__

_____
REGION 1 ENGINEER

1/16/2026

$FILE_DATE_TIME$

COUNTY HIGHWAY:	B45/W32
FISCAL YEAR:	2024
SECTION:	19-TCIDS-00-ES

COUNTY OF COOK
DEPARTMENT OF TRANSPORTATION AND HIGHWAYS

COMPUTED:
DRAWN: DB
CHECKED: CB

REVISIONS | DATE

COVER SHEET

SCALE: NTS SHEET: 1

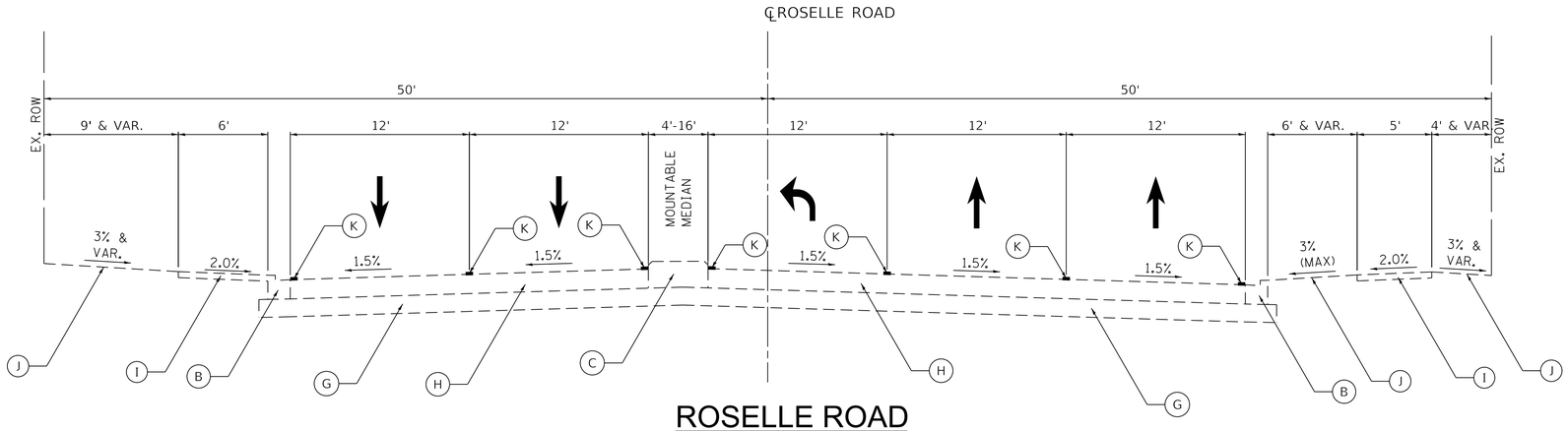

ROSELLE ROAD
EXISTING TYPICAL SECTION
STA. 22+00.20 TO STA. 29+43.58
LOOKING NORTH

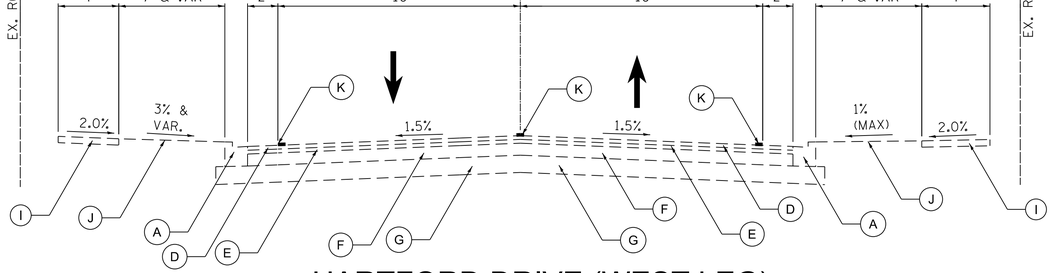

HARTFORD DRIVE (WEST LEG)
EXISTING TYPICAL SECTION
STA. 47+35.72 TO STA. 50+00.00
LOOKING EAST

EXISTING LEGEND

- (A) EXISTING CURB & GUTTER, TYPE M-2.12
- (B) EXISTING CURB & GUTTER, TYPE B-6.24
- (C) EXISTING MOUNTABLE MEDIAN
- (D) EXISTING HOT-MIX ASPHALT SURFACE COURSE, VARIES 1 1/4" TO 1 3/4"
- (E) EXISTING HOT-MIX ASPHALT SURFACE BINDER, VARIES 3/4" TO 2 3/4"
- (F) EXISTING BITUMINOUS BASE COURSE, VARIES 5.0" TO 10 3/4"
- (G) EXISTING GRANULAR SUB-BASE
- (H) EXISTING P.C.C. PAVEMENT 10.0"
- (I) EXISTING P.C.C. SIDEWALK
- (J) EXISTING LANDSCAPING
- (K) EXISTING MODIFIED URETHANE PAVEMENT MARKING
- (L) EXISTING CLASS B PATCHES, TYPE IV, 10"
- (L) EXISTING PAVEMENT JOINTINGS

PLOT DATE = 1/15/2026 PLOT TIME = 9:46:02 PM
FILE NAME = pw:\\singh-pw.bentley.com:singh-pw-01\Documents\Projects\2022-07\700_CADD\703_Sheet_Files\Roselle & Hartford\1938-17904-RH_sht-Typical01.dgn

	SCHAUMBURG, IL	COUNTY HIGHWAY:	V60	COUNTY OF COOK DEPARTMENT OF TRANSPORTATION AND HIGHWAYS	COMPUTED: SA DRAWN: SA CHECKED: CJ	REVISIONS:	DATE:	ROSELLE RD AND HARTFORD DR TYPICAL SECTIONS	C-20
		FISCAL YEAR:	2024						SCALE: NTS SHEET: 71
		SECTION:	23-HSIP1-00-TL						

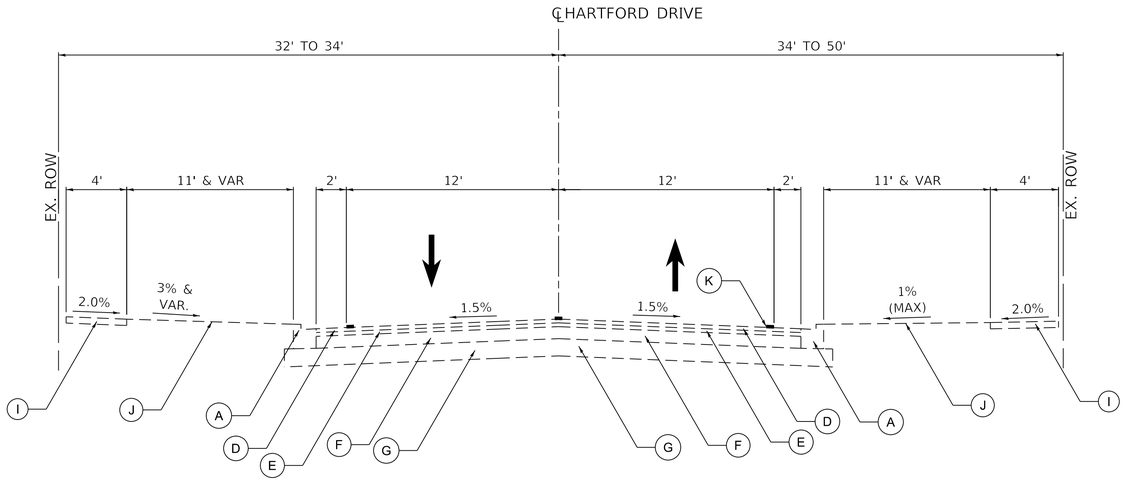

HARTFORD DRIVE (EAST LEG)
EXISTING TYPICAL SECTION
STA. 50+00.00 TO STA. 51+84.06
LOOKING EAST

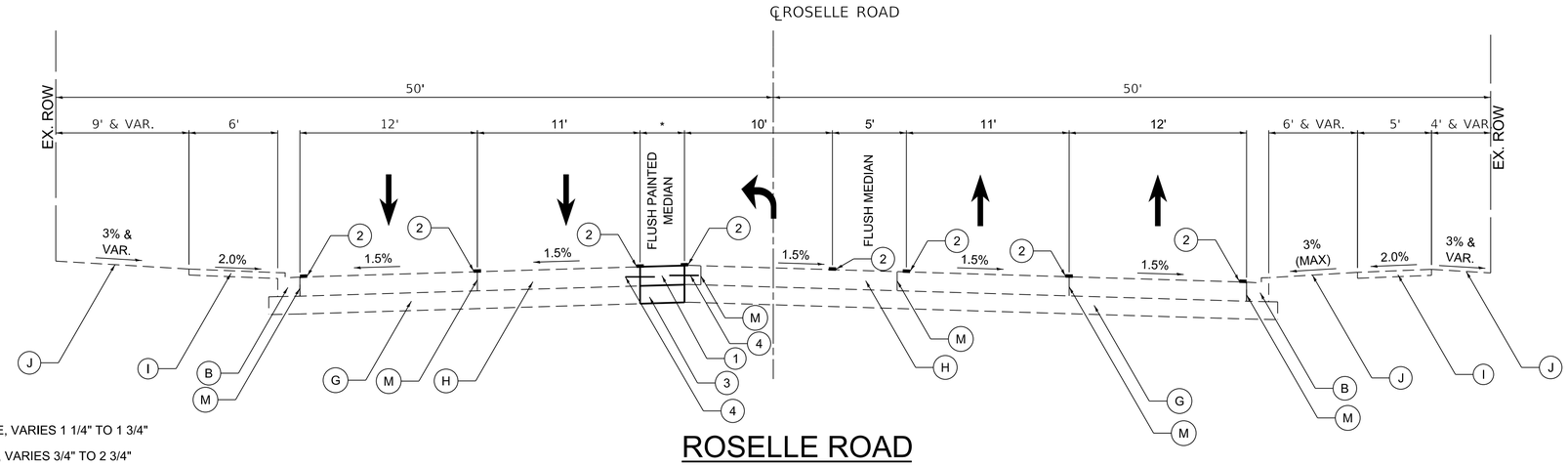

ROSELLE ROAD
PROPOSED TYPICAL SECTION
STA. 20+00.20 TO STA. 29+43.58
LOOKING NORTH

EXISTING LEGEND

- (A) EXISTING CURB & GUTTER, TYPE M-2.12
- (B) EXISTING CURB & GUTTER, TYPE B-6.24
- (C) EXISTING MOUNTABLE MEDIAN
- (D) EXISTING HOT-MIX ASPHALT SURFACE COURSE, VARIES 1 1/4" TO 1 3/4"
- (E) EXISTING HOT-MIX ASPHALT SURFACE BINDER, VARIES 3/4" TO 2 3/4"
- (F) EXISTING BITUMINOUS BASE COURSE, VARIES 5.0" TO 10 3/4"
- (G) EXISTING GRANULAR SUB-BASE
- (H) EXISTING P.C.C. PAVEMENT 10.0"
- (I) EXISTING P.C.C. SIDEWALK
- (J) EXISTING LANDSCAPING
- (K) EXISTING MODIFIED URETHANE PAVEMENT MARKING
- (L) EXISTING CLASS B PATCHES, TYPE IV, 10"
- (M) EXISTING PAVEMENT JOINTINGS

PROPOSED LEGEND

- (1) PROPOSED P.C.C. PAVEMENT, 10"
- (2) MODIFIED URETHANE PAVEMENT MARKING
- (3) PROPOSED AGGREGATE SUBGRADE IMPROVEMENT, 12"
- (4) #6 TIE BARS, 24" LONG @ 24' C-C (INCIDENTAL)

NOTE:

* - VARIES 3' TO 15.5'

PLOT DATE = 1/15/2026 PLOT TIME = 9:46:11 PM
FILE NAME = pw:\\singh-pw.bentley.com:singh-pw-01\Documents\Projects\23027-07\700_CADD\703_Sheet_Files\Roselle & Hartford\1938-17904-Rht.sht-Typical02.dgn

SCHAUMBURG, IL	COUNTY HIGHWAY:	V60	COUNTY OF COOK DEPARTMENT OF TRANSPORTATION AND HIGHWAYS	COMPUTED: SA DRAWN: SA CHECKED: CJ	REVISIONS:	DATE:	ROSELLE RD AND HARTFORD DR TYPICAL SECTIONS	C-21
	FISCAL YEAR:	2024						SCALE: NTS SHEET: 72
	SECTION:	23-HSIP1-00-TL						

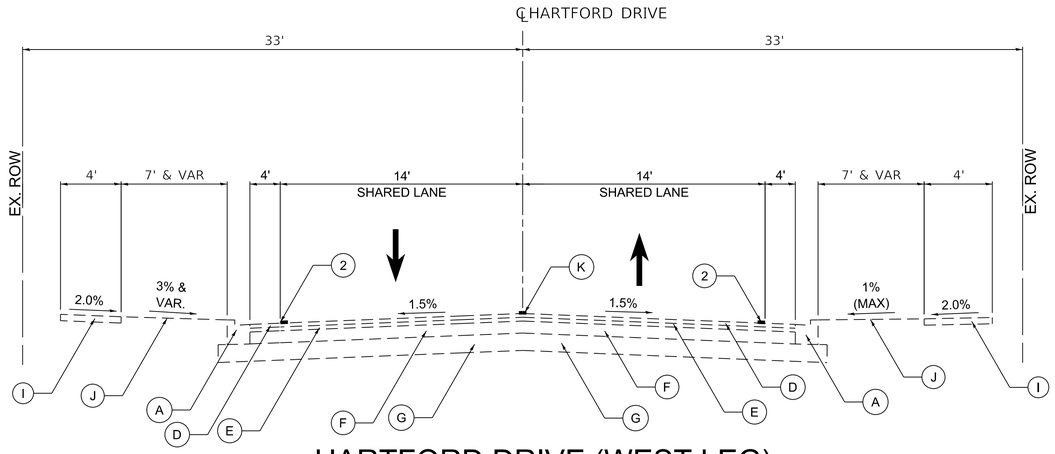

HARTFORD DRIVE (WEST LEG)
PROPOSED TYPICAL SECTION
STA. 47+35.72 TO STA. 50+00.00
LOOKING EAST

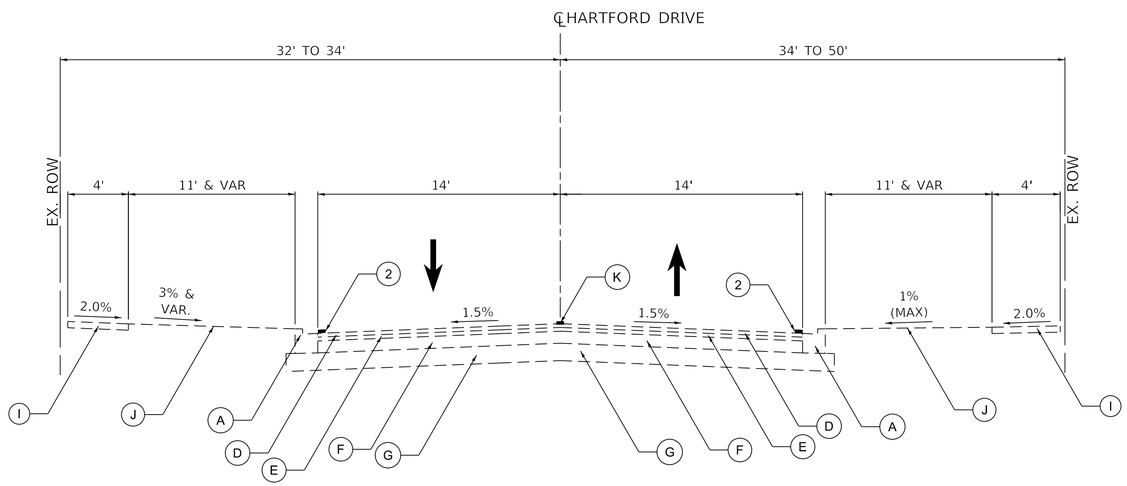

HARTFORD DRIVE (EAST LEG)
PROPOSED TYPICAL SECTION
STA. 50+00.00 TO STA. 51+84.06
LOOKING EAST

EXISTING LEGEND

- (A) EXISTING CURB & GUTTER, TYPE M-2.12
- (B) EXISTING CURB & GUTTER, TYPE B-6.24
- (C) EXISTING MOUNTABLE MEDIAN
- (D) EXISTING HOT-MIX ASPHALT SURFACE COURSE, VARIES 1 1/4" TO 1 3/4"
- (E) EXISTING HOT-MIX ASPHALT SURFACE BINDER, VARIES 3/4" TO 2 3/4"
- (F) EXISTING BITUMINOUS BASE COURSE, VARIES 5.0" TO 10 3/4"
- (G) EXISTING GRANULAR SUB-BASE
- (H) EXISTING P.C.C. PAVEMENT 10.0"
- (I) EXISTING P.C.C. SIDEWALK
- (J) EXISTING LANDSCAPING
- (K) EXISTING MODIFIED URETHANE PAVEMENT MARKING
- (L) EXISTING CLASS B PATCHES, TYPE IV, 10"
- (M) EXISTING PAVEMENT JOINTINGS

PROPOSED LEGEND

- (1) PROPOSED P.C.C. PAVEMENT, 10"
- (2) MODIFIED URETHANE PAVEMENT MARKING
- (3) PROPOSED AGGREGATE SUBGRADE IMPROVEMENT, 12"
- (4) #6 TIE BARS, 24" LONG @ 24' C-C (INCIDENTAL)

PLOT DATE = 1/15/2026 PLOT TIME = 9:48:19 PM
FILE NAME = pw:\\singh-pw.bentley.com:singh-pw-01\Documents\Projects\23027-07\700.CADD\703_Sheet_Files\Roselle & Hartford\1938-17904-RH_sht-Typical03.dgn

SCHAUMBURG, IL	COUNTY HIGHWAY:	V60	**COUNTY OF COOK** DEPARTMENT OF TRANSPORTATION AND HIGHWAYS	COMPUTED: SA DRAWN: SA CHECKED: CJ	REVISIONS:	DATE:	**ROSELLE RD AND HARTFORD DR** TYPICAL SECTIONS	C-22
	FISCAL YEAR:	2024						SCALE: NTS SHEET: 73
	SECTION:	23-HSIP1-00-TL						

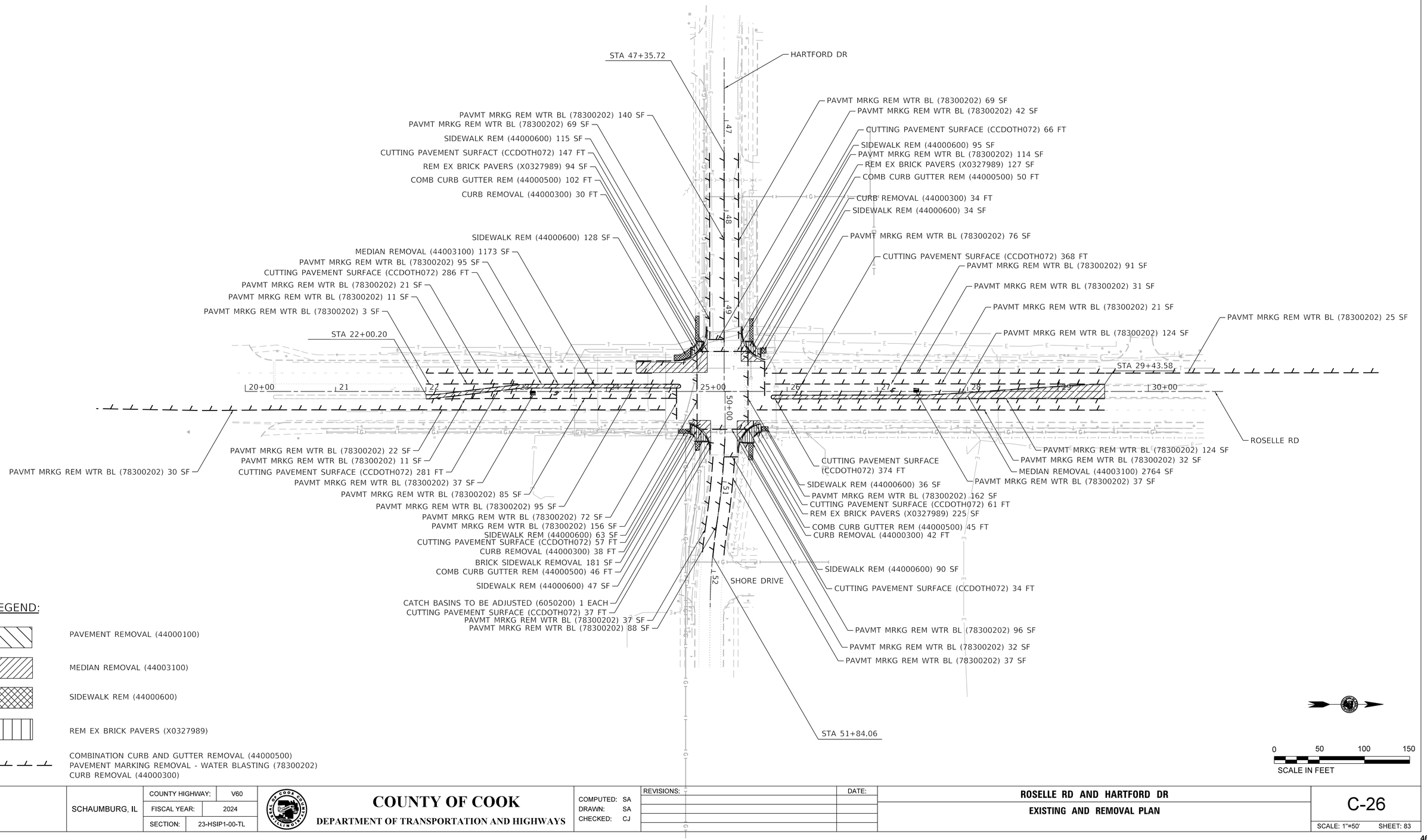

PLOT DATE = 1/15/2026 PLOT TIME = 9:48:28 PM
FILE NAME = pw:\\singh-pw.bentley.com:singh-pw-01\Documents\Projects\23027-07\700_CADD\703_Sheet_Files\Roselle & Hartford\1938-17904-RH_sht-REM01.dgn

SCHAUMBURG, IL	COUNTY HIGHWAY: V60	**COUNTY OF COOK**	COMPUTED: SA	REVISIONS:	DATE:	**ROSELLE RD AND HARTFORD DR**	C-26
	FISCAL YEAR: 2024	DEPARTMENT OF TRANSPORTATION AND HIGHWAYS	DRAWN: SA			**EXISTING AND REMOVAL PLAN**	
	SECTION: 23-HSIP1-00-TL		CHECKED: CJ				SCALE: 1"=50' SHEET: 83

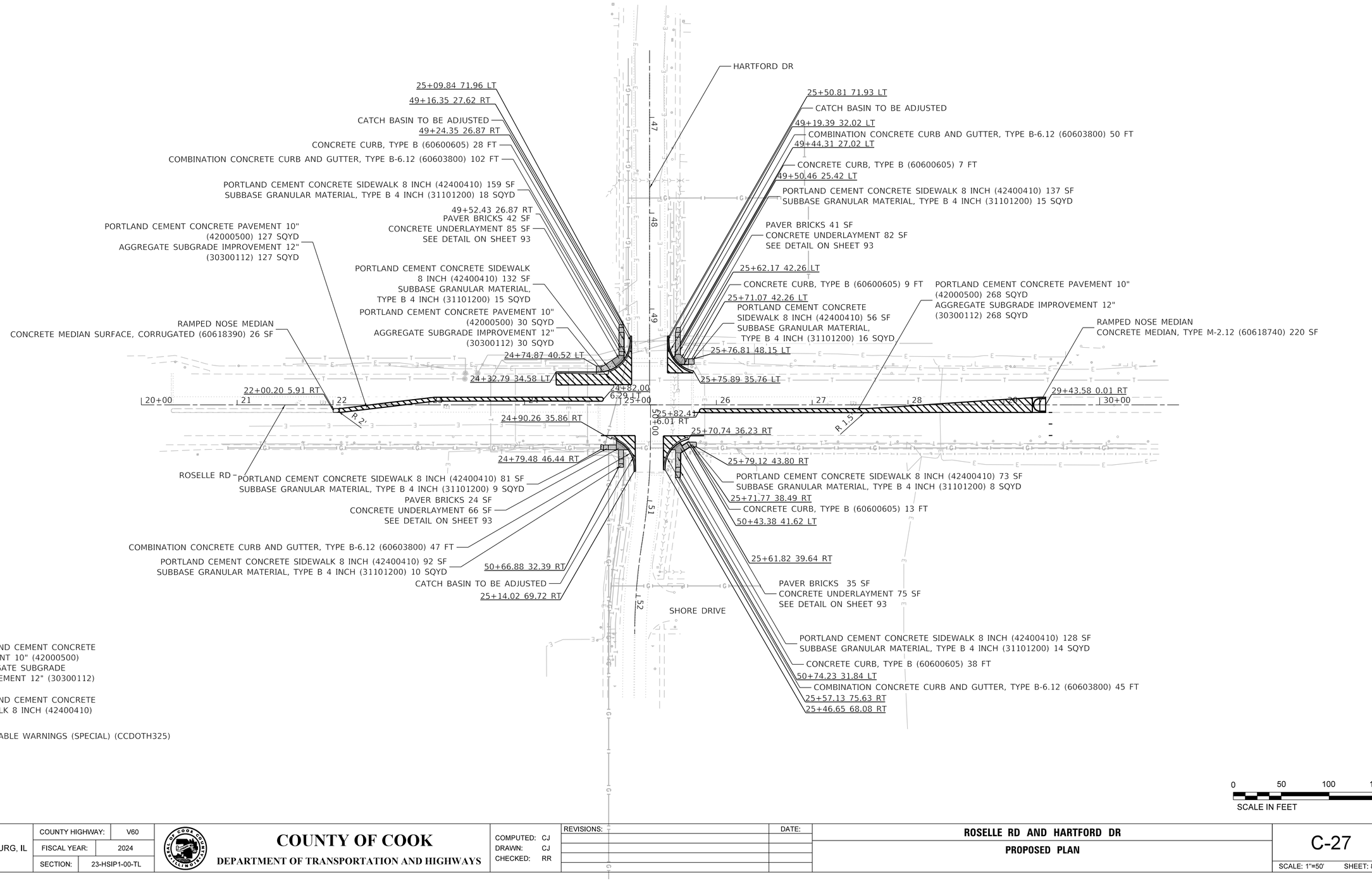

PLOT DATE = 1/16/2026 PLOT TIME = 11:49:54 AM
FILE NAME = pw:\\singh-pw.bentley.com:singh-pw-01\Documents\Projects\23027-07\700_CADD\703_Sheet_Files\Roselle & Hartford\1938-17904-RH_sht-Design01.dgn

SCHAUMBURG, IL	COUNTY HIGHWAY: V60	COUNTY OF COOK	COMPUTED: CJ	REVISIONS:	DATE:	ROSELLE RD AND HARTFORD DR	C-27
	FISCAL YEAR: 2024	DEPARTMENT OF TRANSPORTATION AND HIGHWAYS	DRAWN: CJ			PROPOSED PLAN	SCALE: 1"=50' SHEET: 84
	SECTION: 23-HSIP1-00-TL		CHECKED: RR				

HARTFORD DRIVE & ROSELLE ROAD

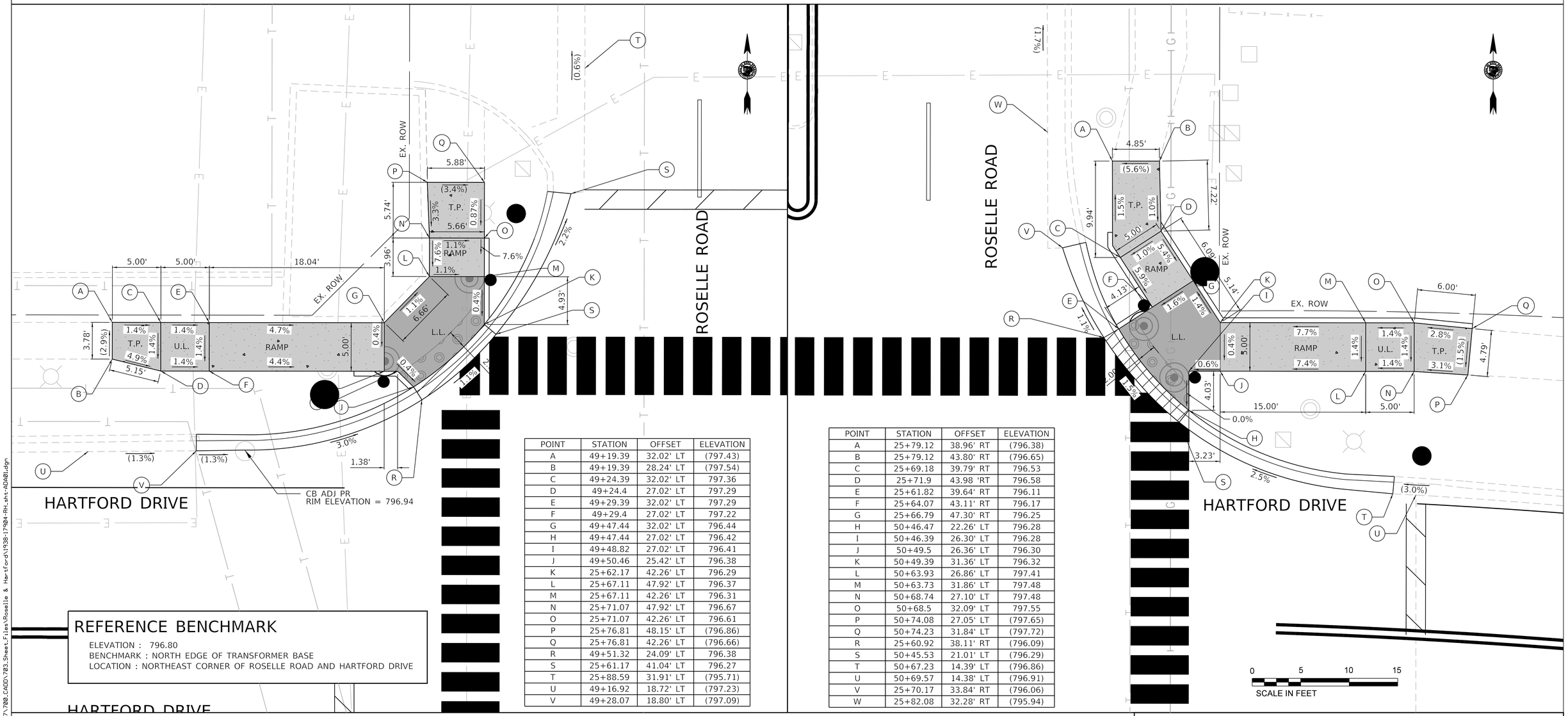

POINT	STATION	OFFSET	ELEVATION
A	49+19.39	32.02' LT	(797.43)
B	49+19.39	28.24' LT	(797.54)
C	49+24.39	32.02' LT	797.36
D	49+24.4	27.02' LT	797.29
E	49+29.39	32.02' LT	797.29
F	49+29.4	27.02' LT	797.22
G	49+47.44	32.02' LT	796.44
H	49+47.44	27.02' LT	796.42
I	49+48.82	27.02' LT	796.41
J	49+50.46	25.42' LT	796.38
K	25+62.17	42.26' LT	796.29
L	25+67.11	47.92' LT	796.37
M	25+67.11	42.26' LT	796.31
N	25+71.07	47.92' LT	796.67
O	25+71.07	42.26' LT	796.61
P	25+76.81	48.15' LT	(796.86)
Q	25+76.81	42.26' LT	(796.66)
R	49+51.32	24.09' LT	796.38
S	25+61.17	41.04' LT	796.27
T	25+88.59	31.91' LT	(795.71)
U	49+16.92	18.72' LT	(797.23)
V	49+28.07	18.80' LT	(797.09)

POINT	STATION	OFFSET	ELEVATION
A	25+79.12	38.96' RT	(796.38)
B	25+79.12	43.80' RT	(796.65)
C	25+69.18	39.79' RT	796.53
D	25+71.9	43.98 'RT	796.58
E	25+61.82	39.64' RT	796.11
F	25+64.07	43.11' RT	796.17
G	25+66.79	47.30' RT	796.25
H	50+46.47	22.26' LT	796.28
I	50+46.39	26.30' LT	796.28
J	50+49.5	26.36' LT	796.30
K	50+49.39	31.36' LT	796.32
L	50+63.93	26.86' LT	797.41
M	50+63.73	31.86' LT	797.48
N	50+68.74	27.10' LT	797.48
O	50+68.5	32.09' LT	797.55
P	50+74.08	27.05' LT	(797.65)
Q	50+74.23	31.84' LT	(797.72)
R	25+60.92	38.11' RT	(796.09)
S	50+45.53	21.01' LT	(796.29)
T	50+67.23	14.39' LT	(796.86)
U	50+69.57	14.38' LT	(796.91)
V	25+70.17	33.84' RT	(796.06)
W	25+82.08	32.28' RT	(795.94)

REFERENCE BENCHMARK

ELEVATION : 796.80
BENCHMARK : NORTH EDGE OF TRANSFORMER BASE
LOCATION : NORTHEAST CORNER OF ROSELLE ROAD AND HARTFORD DRIVE

CONSTRUCTION NOTES

1.) WHERE ADA/PROWAG REQUIREMENTS CANNOT BE MET BY MODIFYING STANDARD DESIGN ELEMENT, THE GUTTER FLAG CROSS SLOPE CAN BE MODIFIED FROM -6% (-5% ADJUSTED FOR CURB RAMP) TO -2% TO ACHIEVE A PEDESTRIAN ACCESS ROUTE CROSS SLOPE OF LESS THAN 2%. ANY FLOW SHALL BE DIRECTED AWAY FROM THE CURB RAMP OR TO AN EXISTING STRUCTURE. ELEVATIONS AT EDGE OF PAVEMENT, FLOW LINE, AND BACK OF CURB SHALL BE NOTED.

2.) WHERE THE EDGE OF PAVEMENT ELEVATION HAS CHANGED FROM RAMP MODIFICATIONS OR DUE TO POOR CONDITION, THE ADJACENT PAVEMENT SHALL BE PATCHED WITH THE SAME TYPE AND DEPTH OF PAVEMENT ALREADY EXISTING. THE PATCH SHALL BE A FULL LANE WIDTH WITH SAW CUTS AT LANE LINES AND PERPENDICULAR TO THE DIRECTION OF TRAFFIC.

3.) SIDEWALK JOINTS SHALL BE 5-FOOT ON CENTER UNLESS OTHERWISE SHOWN ON PLANS.

4.) STATION AND OFFSET CALLOUTS ARE BASED ON ROSELLE ROAD AND HARTFORD DR CENTERLINES.

5.) ALL PEDESTRIAN PUSH BUTTON LOCATIONS SHALL FOLLOW THE GUIDELINES FROM ADA/PROWAG.

6.) THE LOCATION OF THE PEDESTRIAN PUSH BUTTON MUST BE PARALLEL TO THE CROSSWALK.

7.) COORDINATION BETWEEN THE ELECTRICAL CONTRACTOR AND SIDEWALK CONTRACTOR IS REQUIRED BEFORE THE SIDEWALK CONSTRUCTION. THE CONTRACTOR SHALL CONTACT CCDOTH AT 312-603-1734.

8.) A PEDESTRIAN PUSH BUTTON EXTENSION MAY BE NEEDED FOR THE ACCESSIBILITY AND CORRECT ALIGNMENT OF PEDESTRIAN PUSH BUTTON. THE EXTENSION SHALL BE INCLUDED IN COST OF THE PAY ITEM "PEDESTRIAN PUSH BUTTON"

9.) IF PEDESTRIAN PUSH BUTTONS ARE CHANGED DUE TO ADA/PROWAG REQUIREMENTS, THE EXISTING HOLES IN THE POST AND/OR MAST ARM POLE SHALL BE PLUGGED. THIS SHALL BE INCLUDED IN COST OF THE PAY ITEM "PEDESTRIAN PUSH BUTTON".

10.) ADDITIONAL SIDEWALK BEHIND THE TRAFFIC SIGNAL POST/POLE MAY BE NEEDED.

LEGEND

- PROPOSED 8" SIDEWALK
- T.P. TRANSITION PANEL
- ( ) EXISTING ELEVATION/SLOPE
- BRICK PAVEMENT REMOVAL AND REPLACEMENT
- DETECTABLE WARNINGS (SPECIAL)
- U.L. UPPER LANDING
- L.L. LOWER LANDING
- DEPRESSED CURB & GUTTER

SCHAUMBURG, IL

COUNTY HIGHWAY:	V60
FISCAL YEAR:	2024
SECTION:	23-HSIP1-00-TL

COUNTY OF COOK
DEPARTMENT OF TRANSPORTATION AND HIGHWAYS

COMPUTED: CJ
DRAWN: SA
CHECKED: CJ

REVISIONS:	DATE:

ROSELLE RD AND HARTFORD DR
ADA DETAIL SHEET
NORTH

C-28
SCALE: 1"=5' SHEET: 85

PLOT DATE = 1/15/2026 PLOT TIME = 9:48:44 PM
FILE NAME = pw:\\singh-pw.bentley.com:singh-pw-01\Documents\Projects\23027-07\700_CADD\703_Sheet_Files\Roselle & Hartford\1938-17904-Rt-sht-ADA01.dgn

HARTFORD DRIVE & ROSELLE ROAD

POINT	STATION	OFFSET	ELEVATION
A	49+16.35	31.65' RT	(798.59)
B	49+16.35	27.63' RT	(798.64)
C	49+19.35	31.87' RT	798.51
D	49+19.35	26.87' RT	798.48
E	49+24.35	31.87' RT	798.44
F	49+24.35	26.87' RT	798.41
G	49+39.45	31.87' RT	797.39
H	49+39.45	26.87' RT	797.36
I	49+44.45	31.87' RT	797.32
J	49+44.45	26.87' RT	797.29
K	49+48.45	31.87' RT	797.12
L	49+48.45	26.87' RT	797.04
M	49+52.43	26.87' RT	796.97
N	24+90.93	46.48' LT	797.11
O	24+95.37	39.89' LT	797.09
P	24+84.91	42.42' LT	797.28
Q	24+88.87	36.54' LT	797.26
R	24+79.74	40.52' LT	797.31
S	24+79.74	34.52' LT	797.21
T	24+74.87	40.52' LT	797.35
U	24+74.84	34.45' LT	797.24
V	49+53.37	25.59' RT	797.06
W	24+96.25	38.57' LT	796.94
X	24+32.78	32.70' LT	(797.13)
Y	49+28.04	18.78' RT	(797.23)
Z	49+17.56	18.69' RT	(797.43)
A'	24+28.82	32.60' LT	(797.14)

POINT	STATION	OFFSET	ELEVATION
A	24+79.41	41.67' RT	(797.32)
B	24+79.48	46.44' RT	(797.37)
C	24+82.28	41.90' RT	797.09
D	24+82.28	46.90' RT	797.15
E	24+87.28	41.90' RT	797.02
F	24+87.28	46.90' RT	797.08
G	24+95.72	37.49' RT	796.58
H	24+95.72	41.90' RT	796.59
I	24+95.72	46.90' RT	796.61
J	50+47.37	23.46' RT	796.40
K	50+47.46	28.13' RT	796.48
L	50+47.57	33.13' RT	796.57
M	50+57.37	27.87' RT	797.14
N	50+57.55	32.87' RT	797.19
O	50+62.57	27.68' RT	797.21
P	50+62.79	32.68' RT	797.26
Q	50+66.57	27.50' RT	(797.30)
R	50+66.88	32.39' RT	(797.32)
S	24+96.35	36.04' RT	(796.56)
T	50+47.37	23.46' RT	(796.37)
U	50+70.49	14.76' RT	(797.11)
V	50+75.16	14.53' RT	(797.22)
W	24+90.74	33.77' RT	(796.64)
X	24+84.95	32.12' RT	(796.73)

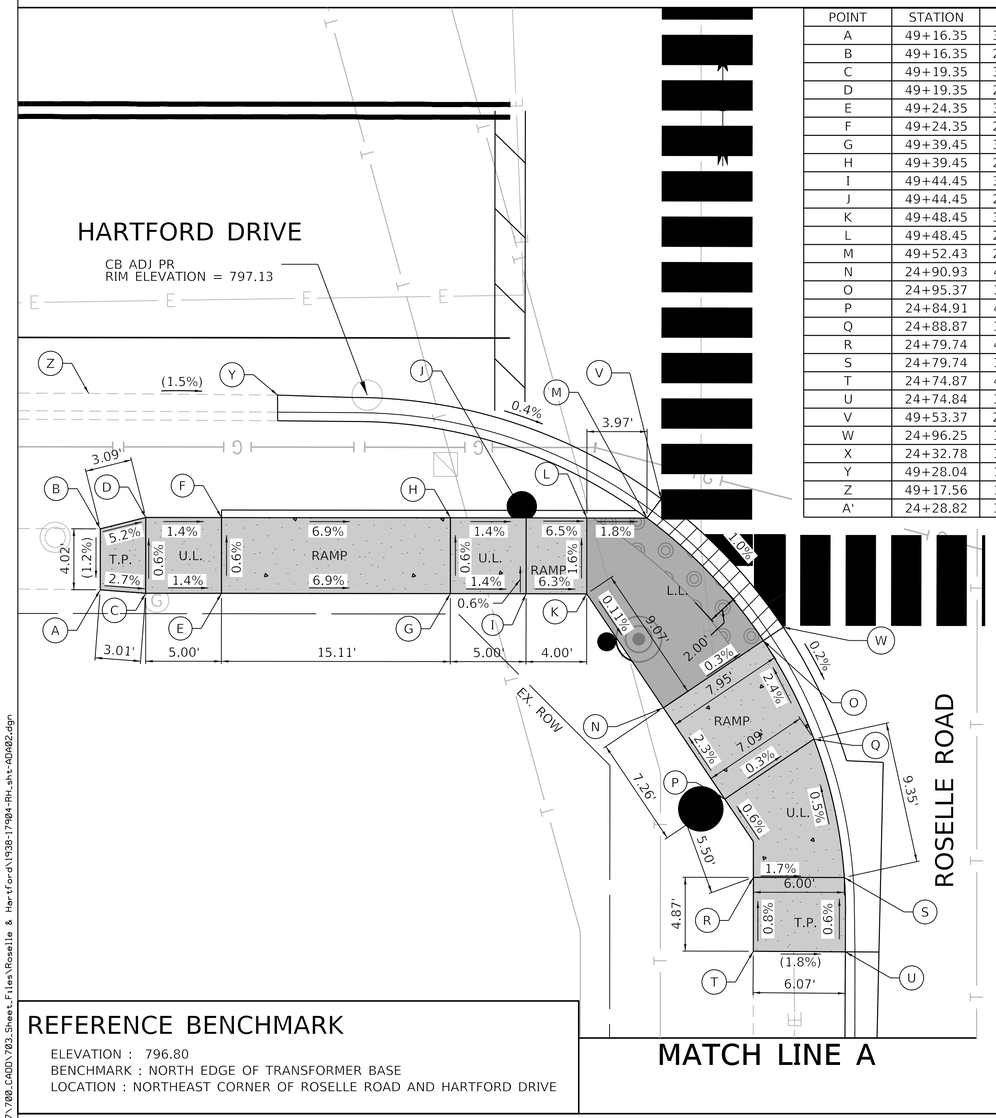

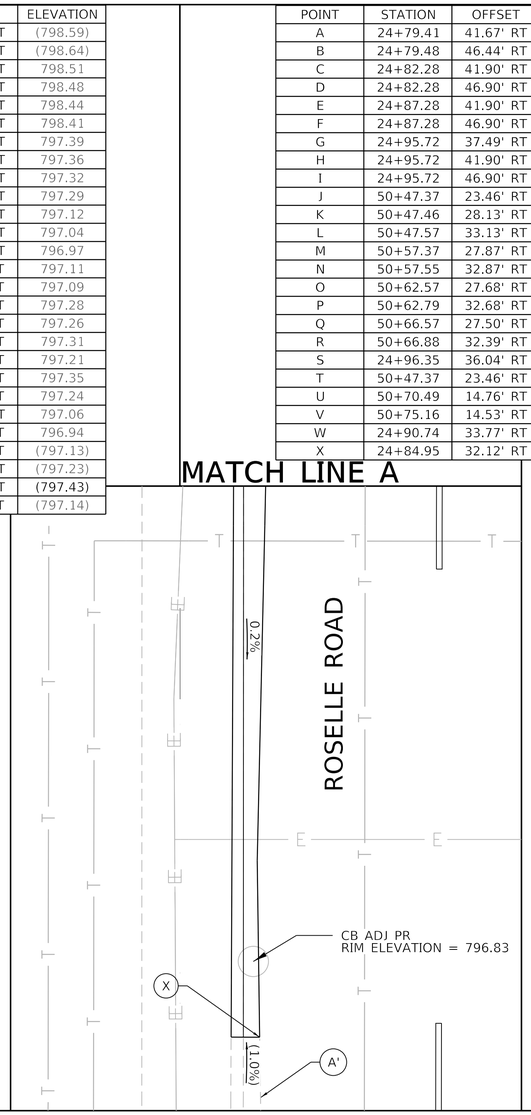

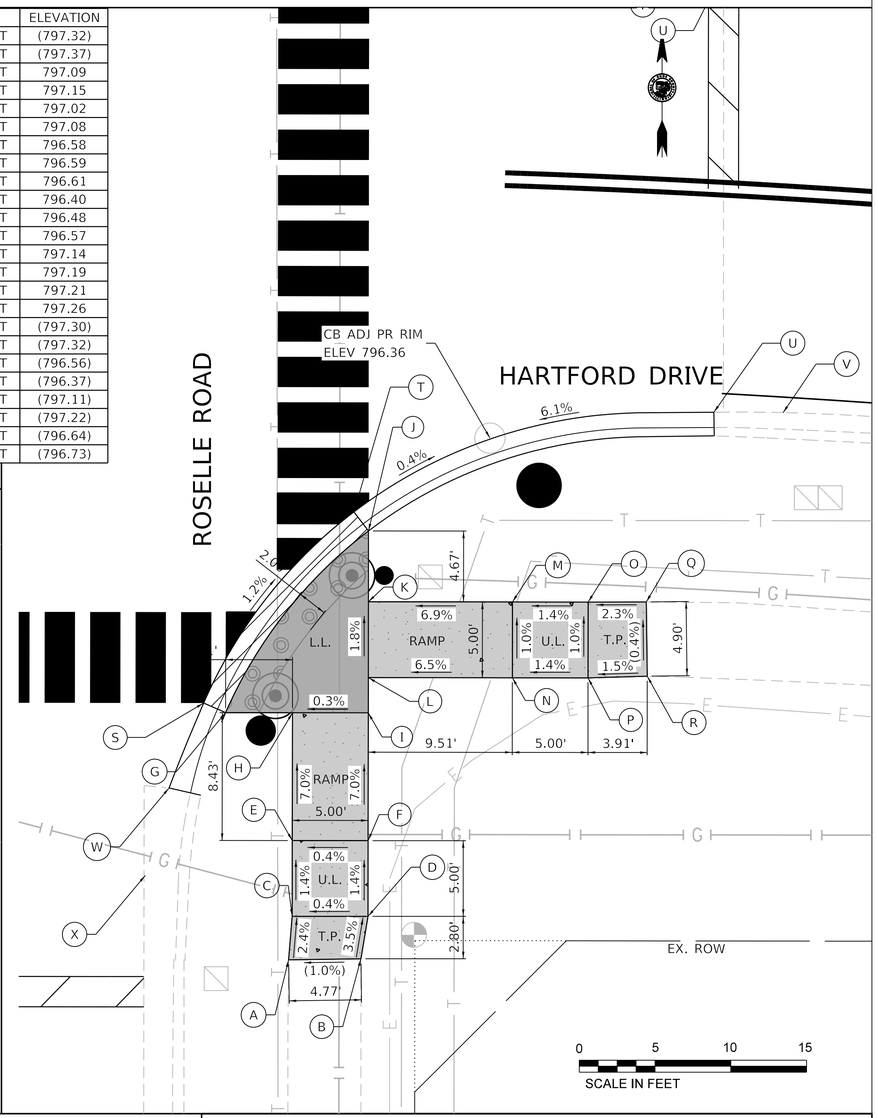

REFERENCE BENCHMARK

ELEVATION : 796.80
BENCHMARK : NORTH EDGE OF TRANSFORMER BASE
LOCATION : NORTHEAST CORNER OF ROSELLE ROAD AND HARTFORD DRIVE

CONSTRUCTION NOTES

1.) WHERE ADA/PROWAG REQUIREMENTS CANNOT BE MET BY MODIFYING STANDARD DESIGN ELEMENT, THE GUTTER FLAG CROSS SLOPE CAN BE MODIFIED FROM -6% (-5% ADJUSTED FOR CURB RAMP) TO -2% TO ACHIEVE A PEDESTRIAN ACCESS ROUTE CROSS SLOPE OF LESS THAN 2%. ANY FLOW SHALL BE DIRECTED AWAY FROM THE CURB RAMP OR TO AN EXISTING STRUCTURE. ELEVATIONS AT EDGE OF PAVEMENT, FLOW LINE, AND BACK OF CURB SHALL BE NOTED.

2.) WHERE THE EDGE OF PAVEMENT ELEVATION HAS CHANGED FROM RAMP MODIFICATIONS OR DUE TO POOR CONDITION, THE ADJACENT PAVEMENT SHALL BE PATCHED WITH THE SAME TYPE AND DEPTH OF PAVEMENT ALREADY EXISTING. THE PATCH SHALL BE A FULL LANE WIDTH WITH SAW CUTS AT LANE LINES AND PERPENDICULAR TO THE DIRECTION OF TRAFFIC.

3.) SIDEWALK JOINTS SHALL BE 5-FOOT ON CENTER UNLESS OTHERWISE SHOWN ON PLANS.

4.) STATION AND OFFSET CALLOUTS ARE BASED ON ROSELLE ROAD AND HARTFORD DRIVE CENTERLINES.

5.) ALL PEDESTRIAN PUSH BUTTON LOCATIONS SHALL FOLLOW THE GUIDELINES FROM ADA/PROWAG.

6.) THE LOCATION OF THE PEDESTRIAN PUSH BUTTON MUST BE PARALLEL TO THE CROSSWALK.

7.) COORDINATION BETWEEN THE ELECTRICAL CONTRACTOR AND SIDEWALK CONTRACTOR IS REQUIRED BEFORE THE SIDEWALK CONSTRUCTION. THE CONTRACTOR SHALL CONTACT CCDOTH AT 312-603-1734.

8.) A PEDESTRIAN PUSH BUTTON EXTENSION MAY BE NEEDED FOR THE ACCESSIBILITY AND CORRECT ALIGNMENT OF PEDESTRIAN PUSH BUTTON. THE EXTENSION SHALL BE INCLUDED IN COST OF THE PAY ITEM "PEDESTRIAN PUSH BUTTON"

9.) IF PEDESTRIAN PUSH BUTTONS ARE CHANGED DUE TO ADA/PROWAG REQUIREMENTS, THE EXISTING HOLES IN THE POST AND/OR MAST ARM POLE SHALL BE PLUGGED. THIS SHALL BE INCLUDED IN COST OF THE PAY ITEM "PEDESTRIAN PUSH BUTTON".

10.) ADDITIONAL SIDEWALK BEHIND THE TRAFFIC SIGNAL POST/POLE MAY BE NEEDED.

LEGEND

- PROPOSED 8" SIDEWALK
- ( ) EXISTING ELEVATION/SLOPE
- DETECTABLE WARNINGS (SPECIAL)
- U.L. UPPER LANDING
- L.L. LOWER LANDING
- DEPRESSED CURB & GUTTER
- T.P. TRANSITION PANEL
- BRICK PAVEMENT REMOVAL AND REPLACEMENT

PLOT DATE = 1/15/2026 PLOT TIME = 9:48:52 PM
FILE NAME = pw:\\sragh-pwbentleyuscomsragh-pw-01\Documents\Projects\23027-07\700_CADD\703_Sheet_Files\Roselle & Hartford\1938-17984-RH-sht-ADA02.dgn

SCHAUMBURG, IL	COUNTY HIGHWAY:	V60	
	FISCAL YEAR:	2024	
	SECTION:	23-HSIP1-00-TL	

COUNTY OF COOK
DEPARTMENT OF TRANSPORTATION AND HIGHWAYS

COMPUTED: CJ
DRAWN: SA
CHECKED: RR

REVISIONS:	DATE:

ROSELLE RD AND HARTFORD DR
ADA DETAIL SHEET
SOUTH

C-29
SCALE: 1"=5' SHEET: 86

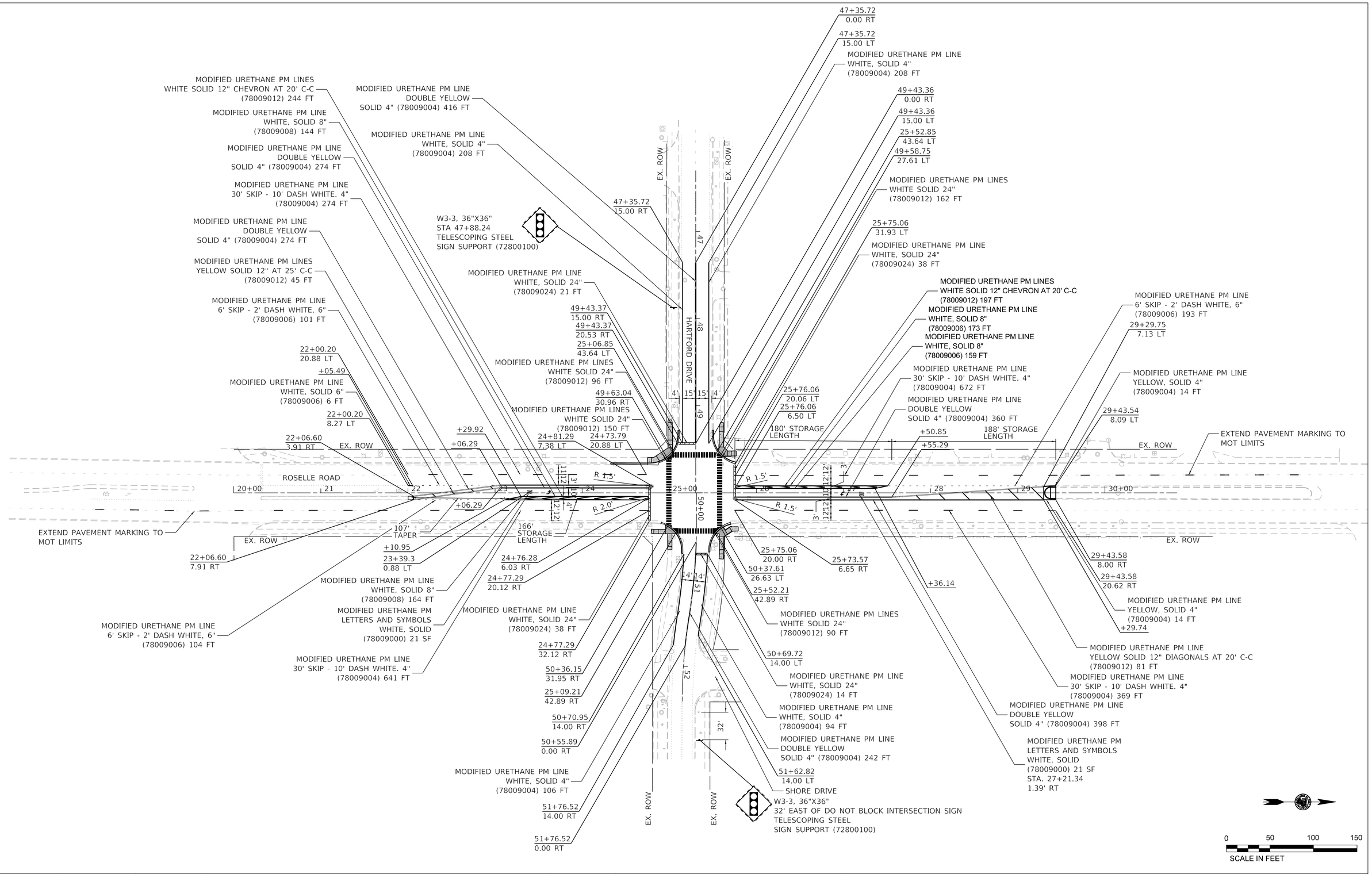

PLOT DATE = 1/15/2026 PLOT TIME = 9:51:37 PM
FILE NAME = p:\\singh-pw\bentley.comsingh-pw-01\Documents\Projects\23027-07\700_CADD\703_Sheet_Files\Roselle & Hartford\1938-17904-RH_sht-PMK01.dgn

SCHAUMBURG, IL	COUNTY HIGHWAY:	V60	**COUNTY OF COOK** DEPARTMENT OF TRANSPORTATION AND HIGHWAYS	COMPUTED: SA DRAWN: SA CHECKED: CJ	REVISIONS:	DATE:	**ROSELLE RD AND HARTFORD DR** **PAVEMENT MARKING AND SIGNAGE**	PM-3
	FISCAL YEAR:	2024						SCALE: 1"=50' SHEET: 94
	SECTION:	23-HSIP1-00-TL						

TEMPORARY TRAFFIC SIGNAL NOTES

1. ALL CONTROL EQUIPMENT INCLUDING EMERGENCY PRE-EMPTION AND COMMUNICATION DEVICES FOR THE TEMPORARY TRAFFIC SIGNAL(S) SHALL BE FURNISHED BY THE CONTRACTOR.

2. ONLY CONTROLLERS SUPPLIED BY ONE OF THE DISTRICT APPROVED CLOSED LOOP EQUIPMENT MANUFACTURERS WILL BE APPROVED FOR USE AT TEMPORARY SIGNAL LOCATIONS. ALL CONTROLLERS USED FOR TEMPORARY TRAFFIC SIGNALS SHALL BE FULLY ACTUATED NEMA MICROPROCESSOR BASED WITH RS232 DATA ENTRY PORTS COMPATIBLE WITH EXISTING MONITORING SOFTWARE APPROVED BY IDOT DISTRICT 1, INSTALLED IN A NEMA TS1 OR TS2 CABINET. ONLY ONE BRAND OF CONTROLLER WILL BE ACCEPTED FOR ANY ONE CONTRACT.

3. ALL TRAFFIC SIGNAL SECTIONS, AND PEDESTRIAN SIGNAL SECTIONS SHALL BE 12" (300MM). HEADS SHALL BE PLACED AS INDICATED ON THE TEMPORARY TRAFFIC SIGNAL PLAN OR AS DIRECTED BY THE ENGINEER. THE CONTRACTOR SHALL FURNISH ENOUGH CABLE SLACK TO RELOCATE HEADS TO ANY POSITION ON THE SPAN WIRE OR AT LOCATIONS ILLUSTRATED ON THE PLANS FOR CONSTRUCTION STAGING. THE TEMPORARY TRAFFIC SIGNAL SHALL REMAIN IN OPERATION DURING ALL SIGNAL HEAD RELOCATIONS. EACH TEMPORARY TRAFFIC SIGNAL HEAD SHALL HAVE ITS OWN CABLE FROM THE CONTROLLER CABINET TO THE SIGNAL HEAD. IF THE EXISTING INTERSECTION HAS A ILLUMINATED STREET NAME SIGNS THE CONTRACTOR SHALL FURNISH STANDARD NON-ILLUMINATED SIGNS FOR THE TEMPORARY TRAFFIC SIGNAL INSTALLATION.

4. ALL EXISTING STREET NAME AND INTERSECTION REGULATORY SIGNS SHALL BE REMOVED FROM EXISTING POLES, RELOCATED AND SECURELY FASTENED TO THE SIGNAL SPAN WIRE OR WOOD POLE AS DIRECTED BY THE ENGINEER. UPON COMPLETION OF PERMANENT TRAFFIC SIGNAL WORK, ALL STREET NAME AND INTERSECTION REGULATORY SIGNS SHALL BE REMOVED FROM THE TEMPORARY TRAFFIC SIGNAL INSTALLATION AND RELOCATED TO PERMANENT TRAFFIC SIGNAL POLES AS DIRECTED BY THE ENGINEER.

5. ANY TEMPORARY SIGNAL WITHIN AN EXISTING CLOSED LOOP TRAFFIC SIGNAL SYSTEM SHALL BE INTERCONNECTED TO THAT SYSTEM USING SIMILAR BRAND CONTROL EQUIPMENT.

6. THE TEMPORARY TRAFFIC SIGNAL SHALL HAVE THE SIGNAL HEAD DISPLAYS, SIGNAL HEAD PLACEMENTS AND CONTROLLER PHASING MATCH THE EXISTING TRAFFIC SIGNAL, AT THE TIME OF THE TURN ON IF NO TRAFFIC STAGING IS IN PLACE OR WILL NOT BE STAGED ON THE DAY OF THE TURN ON.

7. ANY TEMPORARY TRAFFIC SECTIONS NOT IN USE DURING A STAGE OF CONSTRUCTION SHALL BE BAGGED AND DEACTIVATED. ALL PERMANENT TRAFFIC SIGNAL SECTIONS SHALL BE BAGGED OR REMOVED WHILE THE TEMPORARY TRAFFIC SIGNAL IS OPERATION.

8. ALL VIDEO DETECTION ZONES ARE TO BE REDEFINED DURING EACH STAGE OF CONSTRUCTION AND ARE INCLUDED IN THE COST OF THE TEMPORARY TRAFFIC SIGNAL INSTALLATION.

9. DETECTION AT TEMPORARY TRAFFIC SIGNALS SHALL BE INCLUDED FOR ALL APPROACHES OF THE INTERSECTION UNLESS INDICATED OTHERWISE ON THE PLANS. THE DETECTION SYSTEM MUST MEET THE SPECIFICATIONS OF DISTRICT 1 AND THE CONTRACTOR SHALL PLACE THE DETECTORS INTO OPERATION THE SATISFACTION OF THE ENGINEER.

10. THE CONTRACTOR IS RESPONSIBLE FOR RELOCATING ALL SIGNAL HEADS TO AGREE WITH CONSTRUCTION STAGING AS SHOWN IN THE PLANS OR AS DIRECTED BY THE ENGINEER AND IS CONSIDERED TO BE PART OF THE PAY ITEM TEMPORARY TRAFFIC SIGNAL INSTALLATION. IF THERE IS UTILITY CONFLICT, SIGNAL HEAD CAN BE PUT HORIZONTALLY.

11. COMPLETELY REMOVE ALL EXISTING CONCRETE FOUNDATIONS FOR TRAFFIC SIGNAL POSTS, MAST ARM POLES, AND CONTROLLER CABINETS. THE GAS COMPANY SHALL BE CONTACTED BEFORE REMOVING THE EXISTING CONTROLLER FOUNDATION, AS THE GROUND ROD MAY BE IN CONTACT WITH THE GAS MAIN.

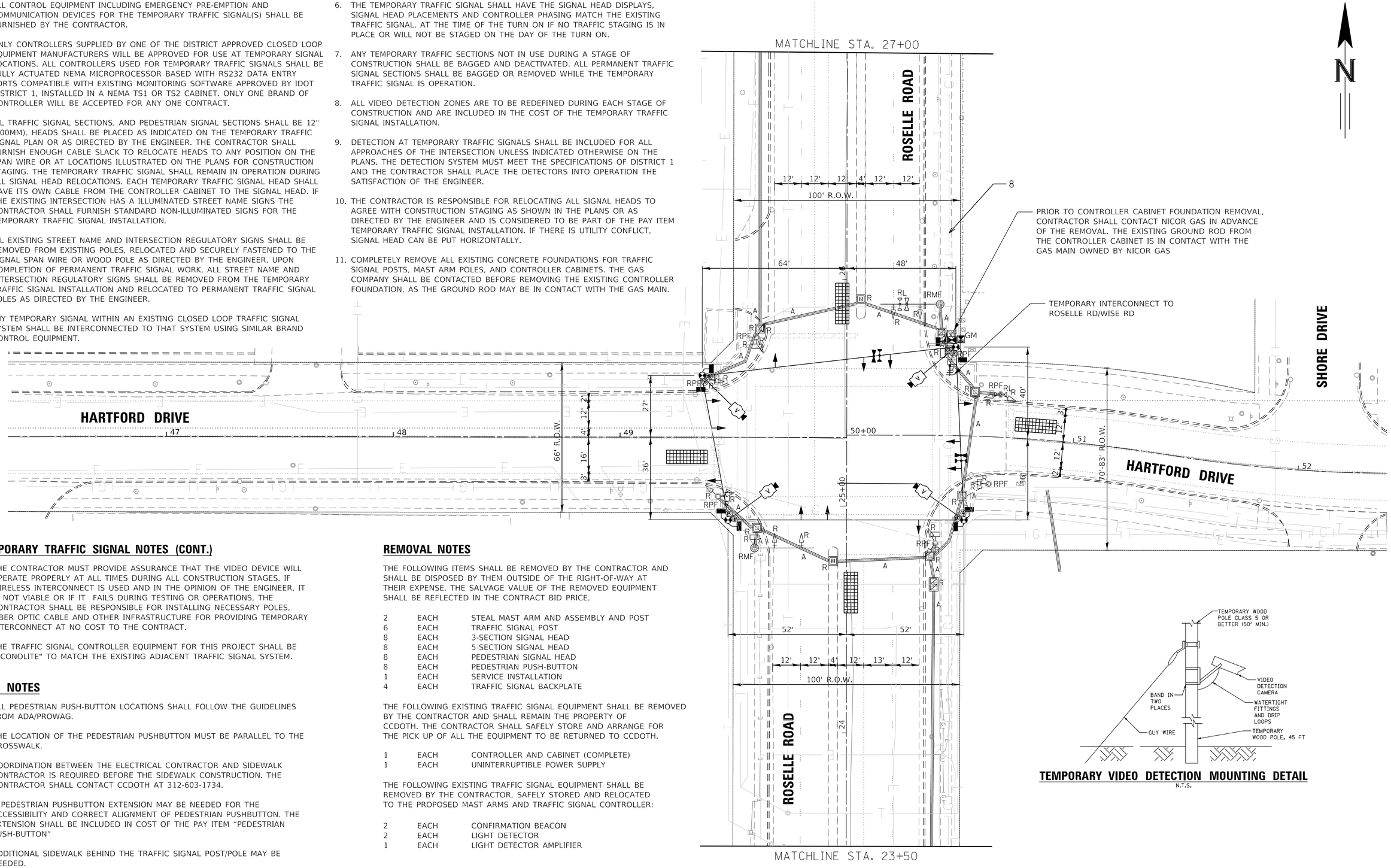

TEMPORARY TRAFFIC SIGNAL NOTES (CONT.)

12. THE CONTRACTOR MUST PROVIDE ASSURANCE THAT THE VIDEO DEVICE WILL OPERATE PROPERLY AT ALL TIMES DURING ALL CONSTRUCTION STAGES. IF WIRELESS INTERCONNECT IS USED AND IN THE OPINION OF THE ENGINEER, IT IS NOT VIABLE OR IF IT FAILS DURING TESTING OR OPERATIONS, THE CONTRACTOR SHALL BE RESPONSIBLE FOR INSTALLING NECESSARY POLES, FIBER OPTIC CABLE AND OTHER INFRASTRUCTURE FOR PROVIDING TEMPORARY INTERCONNECT AT NO COST TO THE CONTRACT.

13. THE TRAFFIC SIGNAL CONTROLLER EQUIPMENT FOR THIS PROJECT SHALL BE "ECONOLITE" TO MATCH THE EXISTING ADJACENT TRAFFIC SIGNAL SYSTEM.

ADA NOTES

1. ALL PEDESTRIAN PUSH-BUTTON LOCATIONS SHALL FOLLOW THE GUIDELINES FROM ADA/PROWAG.

2. THE LOCATION OF THE PEDESTRIAN PUSHBUTTON MUST BE PARALLEL TO THE CROSSWALK.

3. COORDINATION BETWEEN THE ELECTRICAL CONTRACTOR AND SIDEWALK CONTRACTOR IS REQUIRED BEFORE THE SIDEWALK CONSTRUCTION. THE CONTRACTOR SHALL CONTACT CCDOTH AT 312-603-1734.

4. A PEDESTRIAN PUSHBUTTON EXTENSION MAY BE NEEDED FOR THE ACCESSIBILITY AND CORRECT ALIGNMENT OF PEDESTRIAN PUSHBUTTON. THE EXTENSION SHALL BE INCLUDED IN COST OF THE PAY ITEM "PEDESTRIAN PUSH-BUTTON"

5. ADDITIONAL SIDEWALK BEHIND THE TRAFFIC SIGNAL POST/POLE MAY BE NEEDED.

REMOVAL NOTES

THE FOLLOWING ITEMS SHALL BE REMOVED BY THE CONTRACTOR AND SHALL BE DISPOSED BY THEM OUTSIDE OF THE RIGHT-OF-WAY AT THEIR EXPENSE. THE SALVAGE VALUE OF THE REMOVED EQUIPMENT SHALL BE REFLECTED IN THE CONTRACT BID PRICE.

2	EACH	STEAL MAST ARM AND ASSEMBLY AND POST
6	EACH	TRAFFIC SIGNAL POST
8	EACH	3-SECTION SIGNAL HEAD
8	EACH	5-SECTION SIGNAL HEAD
8	EACH	PEDESTRIAN SIGNAL HEAD
8	EACH	PEDESTRIAN PUSH-BUTTON
1	EACH	SERVICE INSTALLATION
4	EACH	TRAFFIC SIGNAL BACKPLATE

THE FOLLOWING EXISTING TRAFFIC SIGNAL EQUIPMENT SHALL BE REMOVED BY THE CONTRACTOR AND SHALL REMAIN THE PROPERTY OF CCDOTH. THE CONTRACTOR SHALL SAFELY STORE AND ARRANGE FOR THE PICK UP OF ALL THE EQUIPMENT TO BE RETURNED TO CCDOTH.

1	EACH	CONTROLLER AND CABINET (COMPLETE)
1	EACH	UNINTERRUPTIBLE POWER SUPPLY

THE FOLLOWING EXISTING TRAFFIC SIGNAL EQUIPMENT SHALL BE REMOVED BY THE CONTRACTOR, SAFELY STORED AND RELOCATED TO THE PROPOSED MAST ARMS AND TRAFFIC SIGNAL CONTROLLER:

2	EACH	CONFIRMATION BEACON
2	EACH	LIGHT DETECTOR
1	EACH	LIGHT DETECTOR AMPLIFIER

TEMPORARY VIDEO DETECTION MOUNTING DETAIL
N.T.S.

PLOT DATE = 1/16/2026 PLOT TIME = 12:01:31 PM
FILE NAME = pw:\\singh-pw.bentley.com:singh-pw-01\Documents\Projects\2027-07\700_CADD\703_Sheet_Files\Roselle & Hartford\1528-14472_Roselle-Hartford_sht_TS 09_Temp 01.dgn

SCHAUMBURG, IL	COUNTY HIGHWAY:	V60	
	FISCAL YEAR:	2024	
	SECTION:	23-HSIP1-00-TL	

COUNTY OF COOK
DEPARTMENT OF TRANSPORTATION AND HIGHWAYS

COMPUTED: SA
DRAWN: SA
CHECKED: GG

REVISIONS:	DATE:

ROSELLE RD AND HARTFORD DR
TEMPORARY TRAFFIC SIGNAL INSTALLATION PLAN
(1 OF 2)

TS-21
SCALE: 1"=20' SHEET: 97

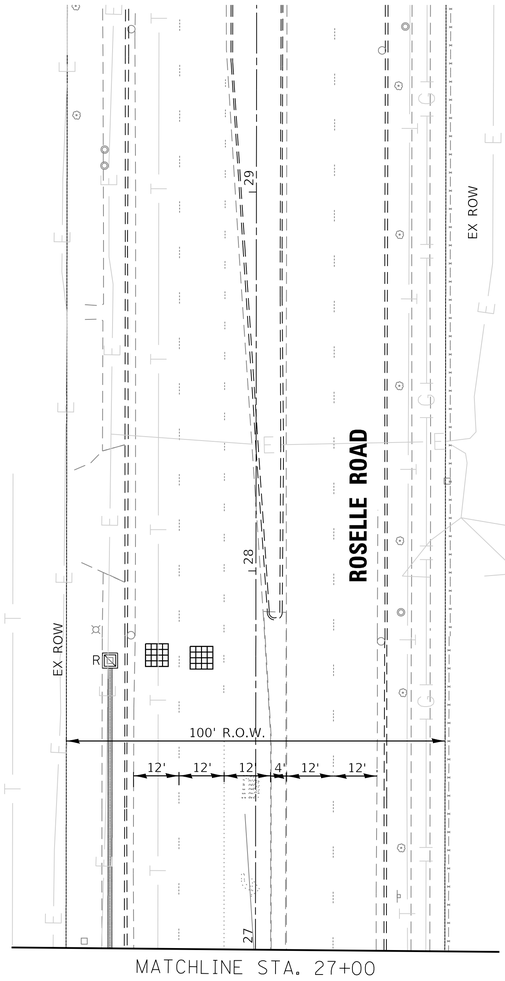

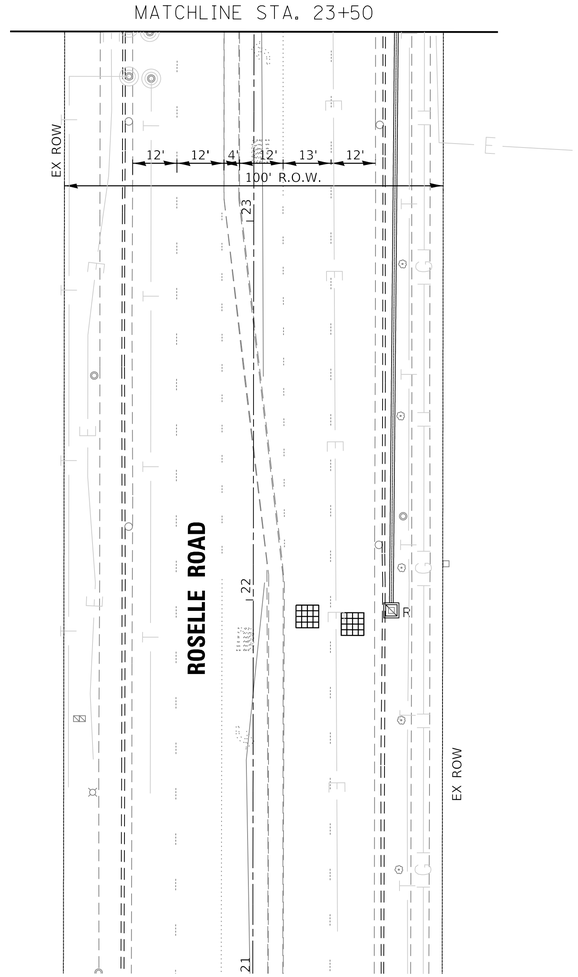



PLOT DATE = 1/16/2026 PLOT TIME = 12:01:39 PM
FILE NAME = pw:\\singh-pw.bentley.com:singh-pw-01\Documents\Projects\23027-07\700_CADD\703_Sheet_Files\Roselle & Hartford\1528-14472_Roselle-Hartford_sht_TS 10_Temp 02.dgn

SCHAUMBURG, IL	COUNTY HIGHWAY:	V60	**COUNTY OF COOK**	COMPUTED: SA	REVISIONS:	DATE:	**ROSELLE RD AND HARTFORD DR**	TS-22
	FISCAL YEAR:	2024	**DEPARTMENT OF TRANSPORTATION AND HIGHWAYS**	DRAWN: SA			**TEMPORARY TRAFFIC SIGNAL INSTALLATION PLAN (2 OF 2)**	
	SECTION:	23-HSIP1-00-TL		CHECKED: GG				SCALE: 1"=20' SHEET: 98

NOTES

1. THE CONTRACTOR SHALL INFORM THE CCDOTH DESIGN ENGINEER AT (312) 603-1734 PRIOR TO THE START OF ANY WORK ON THE CONTRACT. A MINIMUM OF FIVE (5) WORKING DAYS ADVANCED NOTICE IS REQUIRED.
2. THE CONTRACTOR SHALL MARK LOCATIONS OF LOOPS AND CONTACT CCDOTH DESIGN ENGINEER AT (312) 603-1734 FOR LOCATION APPROVAL PRIOR TO THE CUTTING OF THE LOOPS. A MINIMUM OF FIVE (5) WORKING DAYS ADVANCED NOTICE IS REQUIRED.
3. ALL MAST ARM MOUNTED SIGNAL HEADS ARE TO BE ATTACHED 2'-0" FROM THE END OF MAST ARM UNLESS OTHERWISE NOTED.
4. ALL SIGNAL POSTS SHALL BE SET BACK 4 FEET MINIMUM, AND ALL MAST ARM POLES SHALL BE SET BACK 6 FEET MINIMUM FROM THEIR CENTER TO THE BACK OF CURB UNLESS OTHERWISE NOTED. IN NON-CURBED AREAS THE MAST ARM POLE AND THE SIGNAL POST SHALL BE LOCATED A MINIMUM OF 10 FEET BEHIND THE EDGE OF PAVEMENT OR 2 FEET BEHIND THE EDGE OF THE SHOULDER, WHICHEVER DISTANCE IS GREATER.
5. THE EXACT LOCATIONS OF ALL UTILITIES SHALL BE FIELD VERIFIED BY THE CONTRACTOR BEFORE THE INSTALLATION OF ANY COMPONENTS OF THE TRAFFIC SIGNAL SYSTEM. FOR THE LOCATIONS OF THE UTILITIES, CALL JULIE TOLL FREE 1-800-892-0123.
6. ALL ELECTRICAL CABLE SHOULD HAVE POLYVINYL CHLORIDE JACKET.
7. CONDUITS UNDER ROADWAYS AND DRIVEWAYS SHOULD BE INSTALLED IN TRENCH BEFORE PAVEMENT IS PLACED.
8. THE CORNERS OF ALL NEW DETECTOR LOOPS SHALL BE CORE DRILLED INCLUDING PAVEMENT JOINTS AND CRACK.
9. ALL EXISTING LOOP DETECTORS TO BE ANALYZED AND RECUT IF NECESSARY.
10. THE CONTRACTOR SHALL MAKE SURE THAT THE NEW TRAFFIC SIGNAL POST ON AN EXISTING CONCRETE FOUNDATION SHALL BE STRAIGHT UP, IT SHALL BE INCIDENTAL TO THE CONTRACTOR.

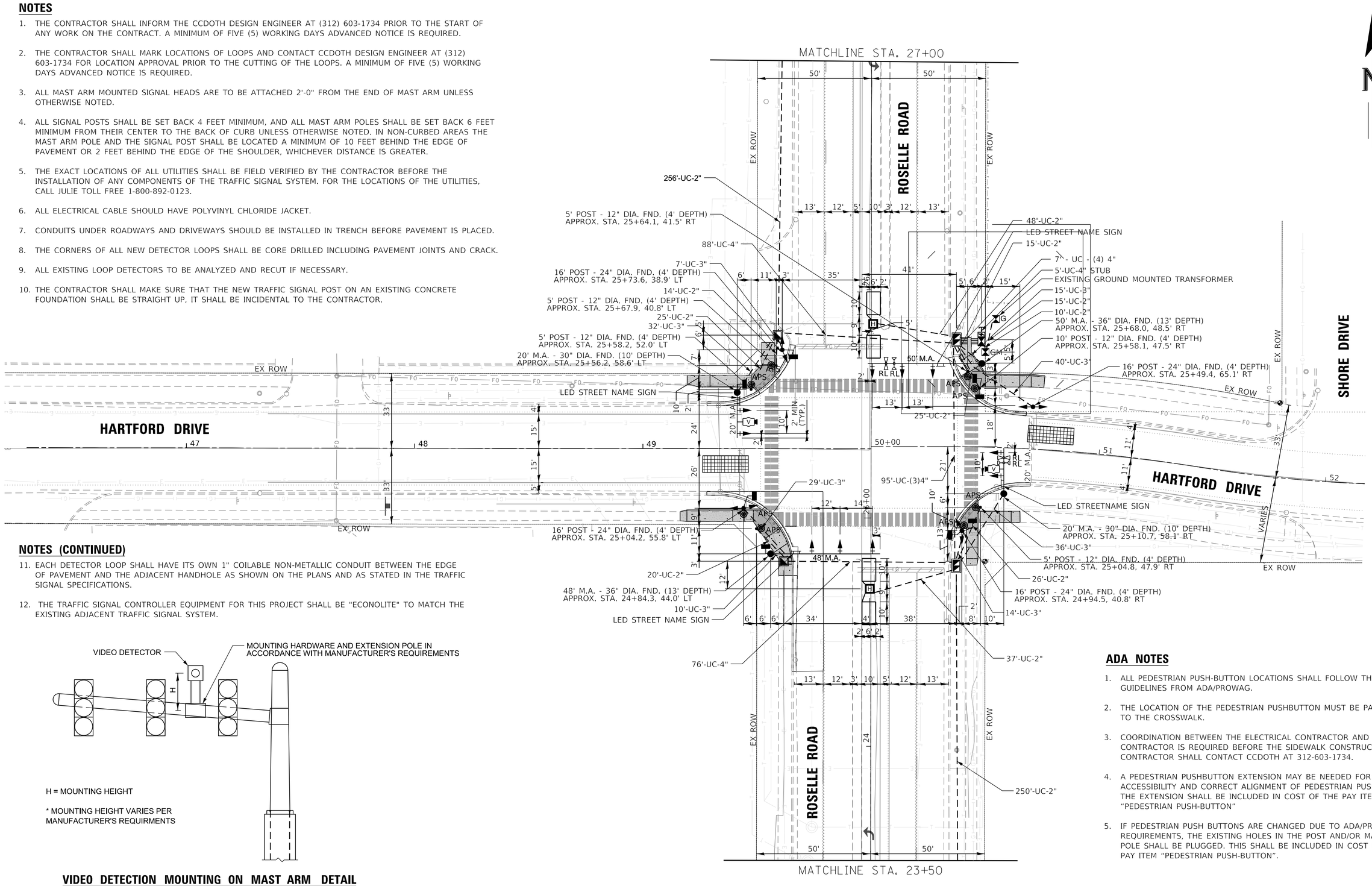

NOTES (CONTINUED)

11. EACH DETECTOR LOOP SHALL HAVE ITS OWN 1" COILABLE NON-METALLIC CONDUIT BETWEEN THE EDGE OF PAVEMENT AND THE ADJACENT HANDHOLE AS SHOWN ON THE PLANS AND AS STATED IN THE TRAFFIC SIGNAL SPECIFICATIONS.
12. THE TRAFFIC SIGNAL CONTROLLER EQUIPMENT FOR THIS PROJECT SHALL BE "ECONOLITE" TO MATCH THE EXISTING ADJACENT TRAFFIC SIGNAL SYSTEM.

VIDEO DETECTION MOUNTING ON MAST ARM DETAIL

ADA NOTES

1. ALL PEDESTRIAN PUSH-BUTTON LOCATIONS SHALL FOLLOW THE GUIDELINES FROM ADA/PROWAG.
2. THE LOCATION OF THE PEDESTRIAN PUSHBUTTON MUST BE PARALLEL TO THE CROSSWALK.
3. COORDINATION BETWEEN THE ELECTRICAL CONTRACTOR AND SIDEWALK CONTRACTOR IS REQUIRED BEFORE THE SIDEWALK CONSTRUCTION. THE CONTRACTOR SHALL CONTACT CCDOTH AT 312-603-1734.
4. A PEDESTRIAN PUSHBUTTON EXTENSION MAY BE NEEDED FOR THE ACCESSIBILITY AND CORRECT ALIGNMENT OF PEDESTRIAN PUSHBUTTON. THE EXTENSION SHALL BE INCLUDED IN COST OF THE PAY ITEM "PEDESTRIAN PUSH-BUTTON"
5. IF PEDESTRIAN PUSH BUTTONS ARE CHANGED DUE TO ADA/PROWAG REQUIREMENTS, THE EXISTING HOLES IN THE POST AND/OR MAST ARM POLE SHALL BE PLUGGED. THIS SHALL BE INCLUDED IN COST OF THE PAY ITEM "PEDESTRIAN PUSH-BUTTON".

SCHAUMBURG, IL	COUNTY HIGHWAY:	V60	
	FISCAL YEAR:	2024	
	SECTION:	23-HSIP1-00-TL	

COUNTY OF COOK
DEPARTMENT OF TRANSPORTATION AND HIGHWAYS

COMPUTED: SA
DRAWN: SA
CHECKED: GG

REVISIONS:	DATE:

ROSELLE RD AND HARTFORD DR
TRAFFIC SIGNAL REPLACEMENT PLAN
(1 OF 2)

TS-24
SCALE: 1"=20' SHEET: 100

PLOT DATE = 1/16/2026 PLOT TIME = 12:01:50 PM
FILE NAME = pw:\\singh-pw.bentley.com:singh-pw-01\Documents\Projects\23027-07\700_CADD\703_Sheet_Files\Roselle & Hartford\528-14472_Roselle-Hartford_sht_TS 12_Prop 01.dgn

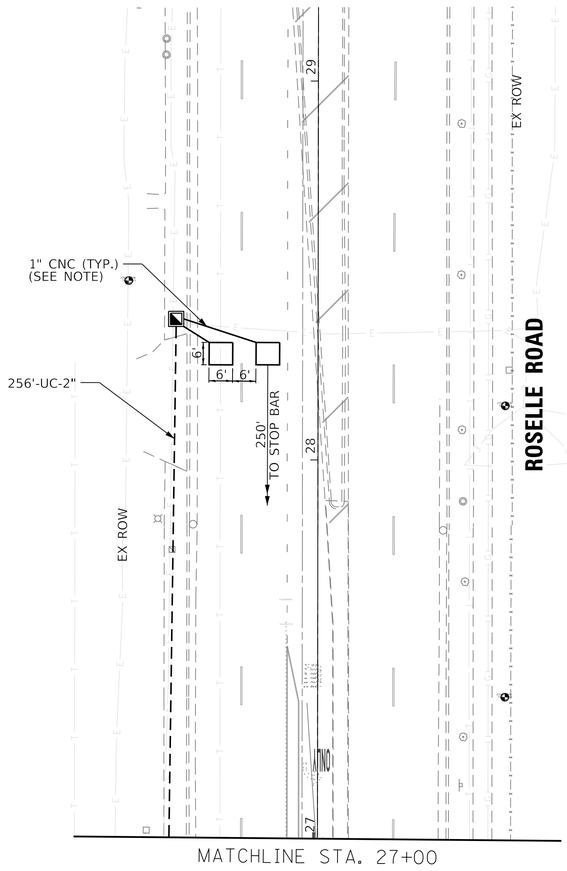

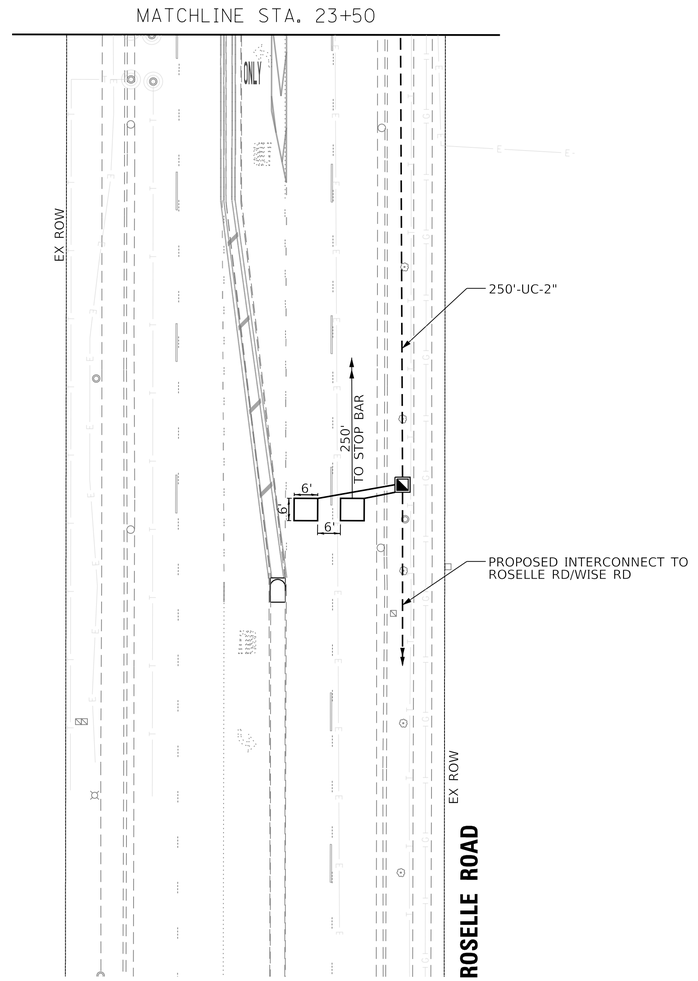

N

PLOT DATE = 1/16/2026 PLOT TIME = 12:01:56 PM
FILE NAME = pw:\\singh-pw.bentley.com:singh-pw-01\Documents\Projects\23027-07\700_CADD\703_Sheet_Files\Roselle & Hartford\1528-14472_Roselle-Hartford_sht_TS 13_Prop 02.dgn

SCHAUMBURG, IL	COUNTY HIGHWAY: V60	**COUNTY OF COOK**	COMPUTED: SA	REVISIONS:	DATE:	**ROSELLE RD AND HARTFORD DR**	TS-25
	FISCAL YEAR: 2024	**DEPARTMENT OF TRANSPORTATION AND HIGHWAYS**	DRAWN: SA			**TRAFFIC SIGNAL REPLACEMENT PLAN (2 OF 2)**	SCALE: 1"=20' SHEET: 101
	SECTION: 23-HSIP1-00-TL		CHECKED: GG				

VILLAGE OF SCHAUMBURG

AGENDA ITEM SUMMARY

Resolution No. R-26-_____A Resolution Authorizing the Village Manager and Village Clerk to Execute an Agreement for the Twelfth Year of Metropolitan Water Reclamation District of Greater Chicago Infiltration/Inflow Control Program for Phases I, II, and III with RJN Group, Inc.
04/14/26
Village Board

Presenter: Brent R. McQueen, Engineering Division Manager
Lead Department: Engineering and Public Works

Account(s):	Budget:	Expense Request:
SEE ATTACHED BUDGET TABLE		

The budget status for this request is: Under Budget

Amount Under Budget: $2,428

Executive Summary:

The Metropolitan Water Reclamation District of Greater Chicago (MWRD) is responsible for the reclamation and treatment of wastewater and flood abatement within Cook County. Federal regulations related to the Clean Water Act require water authorities that collect, convey, and/or treat wastewater to develop a plan to minimize rain-derived inflow and infiltration from entering the wastewater collection system. Excess stormwater within a sanitary sewer collection system can lead to Sanitary Sewer Overflows (SSOs) and private property Basement Backups (BBs), both of which are considered unpermitted environmental releases.

In 2015, the MWRD began implementing a new program, the Infiltration/Inflow Control Program (IICP). The IICP, comprised of a short-term and long-term plan, required MWRD satellite municipalities, those within Cook County but outside of the City of Chicago, to investigate their sanitary sewer system, identify the source of I/I, and rehabilitate the defects allowing excess rainwater to enter the sanitary sewer collection system.

In April of 2024, staff released a Request for Proposals (RFP) to qualified professional engineering firms to assist the Village with the required tasks and reporting. In June of 2024, the Village Board approved an agreement with RJN Group, Inc., of Downers Grove, Illinois (RJN), to perform IICP tasks for the Village for a period of three years. The agreement is renewable in the second and third year based upon approval from both parties.

RJN has submitted a proposal to complete reporting, design, and construction administration tasks associated with the IICP program in FY 26/27. The proposed scope of work includes annual compliance reporting, assessment of the Bode and Walnut Basins, design of the Cedarcrest and Walnut & Kessel manhole rehabilitation projects, construction observation of the small Asbestos Cement Pipe

lining, and post rehabilitation flow monitoring in the North Braintree Basin.

The Village's operating budget and the FY 26/27 Capital Improvement Program (CIP) include funds in the Utility Fund for the ongoing IICP program. RJN has submitted a proposal in the amount of $406,572 to complete the tasks listed above in FY 26/27. RJN's pricing for design and construction administration equates to less than 10% of the expected construction cost for each project. Based on staff's review of comparable engineering service contracts for similar services, the fee percentage is competitive and provides good value for the Village. As shown in the attached budget table, RJN's proposal is within budget.

Recommended Action:

The Village Manager recommends that the Engineering and Public Works Committee recommend the Village Board authorize the Village Manager and Village Clerk to execute an agreement for the Twelfth Year of Metropolitan Water Reclamation District of Greater Chicago Infiltration/Inflow Control Program for Phases I, II, and III with RJN Group, Inc. of Wheaton, IL, in the amount of $406,572, and approve the required Resolution.

ATTACHMENTS:
- Budget Table
- Proposal
- Resolution
- PSA

FY 26/27 - Improvement and Budget Information					
IMPROVEMENT	**ACCOUNT**	**AVAILABLE BUDGET**	**EXPENSE REQUEST**	**AMOUNT REMAINING**	**PHASE**
Compliance Reporting for the MWRD IICP Program	5724070-7223	$14,000	$14,000	$0	Reporting
Bode Subbasin 04 Area Sewer System Evaluation Survey, Recommendation and Summary Report	5729020-7455 (25024-10-100)	$50,000	$50,000	$0	Study
Walnut Lane Subbasin 05 Area Sewer System Evaluation Survey, Recommendations and Summary Report	5729020-7455 (27020-10-100)	$40,000	$39,353	$647	Study
Rehabilitation Design of Cedarcrest (Bode 5, 6, 8, 9) HP Manhole Rehabilitation	5729020-7455 (26039-10-140)	$45,000	$45,000	$0	Phase II
Rehabilitation Design of Walnut and Kessel Basin HP Manhole Rehabilitation	5729020-7455 (27019-10-140)	$70,000	$68,503	$1,497	Phase II
Construction Management of Small ACP HP Lining	5729020-7455 (23035-20-220)	$145,000	$144,916	$84	Phase III
Flow Monitoring - Investigation Installation in North Braintree Basin	5729020-7455 (19043-10-100)	$45,000	$44,800	$200	Study
	TOTAL:	**$409,000**	**$406,572**	**$2,428**	

March 13, 2026

Mr. Brent McQueen, P.E., CFM, CPESC
Engineering Division Manager, Engineering & Public Works
Village of Schaumburg
714 South Plum Grove Road
Schaumburg, Illinois 60193-4329

Subject: Proposal for Fiscal Year 2026-27 MWRD IICP Services – Annual Reporting, SSES, Design, Construction Management

Dear Mr. McQueen:

RJN Group, Inc. (RJN) is pleased to submit this proposal to provide Professional Engineering and Specialty Field Services to assist the Village of Schaumburg (Village) in meeting the Long-Term Program requirements of the Metropolitan Water Reclamation District of Greater Chicago (MWRD) Infiltration / Inflow Control Program (IICP).

This proposal outlines the eleventh year of work for the MWRD IICP. The following table provides a summary of the work completed in each of the previous years. Although the fiscal year 2014/15 is included in the summary, it primarily served as a planning and preparation year.

2014/15	- Flow Meter Purchase and Kickoff
2015/16	- Flow Meter Planning and Coordination - Walnut Basin Flow Monitoring - Replace Flow Meter Equipment Purchase
2016/17	- MWRD IICP Annual Reporting - Kessel/Braintree Basins Flow Monitoring - Walnut Basin SSES - GIS Collection of Rim Elevations and Locations - Walnut Lane Lift Station Study
2017/18	- MWRD IICP Annual Reporting - Walnut Lift Station Downstream Capacity Flow Monitoring - Kessel Park Basin SSSES - Walnut and Kessel Basin Rehab Design - Walnut Basin Construction Management/Observation
2018/19	- MWRD IICP Annual Reporting, Private Sector Program, and Long-Term Plan - Braintree Basin Flow Monitoring - North Braintree Basin SSES - North Braintree Basin Rehab Design - Walnut and Kessel Basins Construction Management/Observation
2019/20	- MWRD IICP Annual Reporting, Private Sector Program, and Long-Term Plan

2019/20	- Bode Rd LS and Cedarcrest Basins Flow Monitoring - Bode Rd LS Basin SSES and Survey - Bode Rd LS Basin Rehab Design - North Braintree Basin Rehab Construction Management/Observation - Walnut Basin Rehab Construction Management/Observation
2020/21	- MWRD IICP Annual Reporting - Downstream Walnut Basin Flow Monitoring - South Braintree Basin SSES - South Braintree Basin Rehab Design - Bode Rd LS Basin Rehab Construction Management/Observation
2021/22	- MWRD IICP Annual Reporting - South Braintree Basin Rehab Design - South Braintree Basin Point Repair Construction Management/Observation - East Schaumburg Flow Monitoring (Partial) - Braintree Basin Hydraulic Model - Jeffrey Ln and Illinois Ave CMP Assessment and Preliminary Design - Bode Rd Lift Station Force Main Assessment
2022/23	- MWRD IICP Annual Reporting - South Braintree Basin Rehab Design - South Braintree Basin Construction Management/Observation - ACP CCTV Assessment and Preliminary Design (over 10") - ACP (over 10") Point Repair Design - East Schaumburg Flow Monitoring Installs
2023/24	- MWRD IICP Annual Reporting - Downstream Walnut Basins 7 & 9 – MHI, Smoke Testing, and Dye Testing - ACP CCTV Assessment and Preliminary Design (10" and under) - South Braintree High Priority Lining Design - ACP (over 10") High Priority Lining Design - South Braintree Lining Construction Management/Observation - ACP Point Repair Construction Management/Observation - East Schaumburg Flow Monitoring (continued)
2024/25	- MWRD IICP Annual Reporting - Downstream Walnut Basins 7 & 9 – CCTV - ACP (10" and Under) Point Repair Design - ACP (over 10") High Priority Lining Construction Management/Observation - South Braintree High Priority Lining Construction Management/Observation
2025/26	- MWRD IICP Annual Reporting - SSES of Select Cedarcrest Area - ACP(10" and under) HP Lining, N Braintree and Bode LS Areas HP Manhole Rehab Design - ACP (10" and under) Point Repair, N Braintree and Bode LS Areas Manhole Rehab Construction Management/Observation - Flow Monitoring Post High Priority Rehab (Meter Installs)

As a reference, a map exhibit is attached in Exhibit D to show the work completed in previous years and the work proposed for the upcoming fiscal year as discussed with the Village.

The services to be provided under the MWRD IICP for Fiscal Year 2026/27 are as follows:

- MWRD IICP Annual Reporting
- SSES: High Peaking Factor areas in parts of Bode and Walnut Lane
    - Bode-04
    - WL-05
- Design: Select High Priority Defect Manhole Rehabilitation
    - Portions of Cedarcrest, Walnut, and Kessel areas
- Construction Management and Observation:
    - ACP (10" and under) High Priority Lining
- Flow Monitoring:
    - North Braintree Post High Priority Rehabilitation Benchmarking (continued)

MWRD Annual Reporting

As a reminder, MWRD reviewed the Village's Long-Term Operations and Maintenance Plan (LTOMP) and Private Sector Plan (PSP), and it was approved on March 22, 2021.

The annual paperwork for the MWRD IICP will be completed with assistance from Village staff. Now that the short-term program is complete, these services shift to the long-term program, with the seventh submittal due on March 1, 2027.

SSES For Select Bode and Walnut Lane Areas

The Village has completed SSES in all three high priority areas under the short-term program (Walnut, Kessel, and North Braintree). The MWRD's long-term requirements include continuing SSES at 2% of the system per year. This has been progressing with the SSES of the Bode Road Lift Station Areas in 2019/20, South Braintree basins in 2020/21, the Downstream Walnut Basins in 2023-2025, and Bode Basins in 2025/26. To date, the long-term requirements are being met, with the select high peaking factor meters basins next on the list for SSES. The chosen basins are BODE-04 and WL-05, which have 9.63 and 28.8 peaking factors, respectively, based on the full Village flow monitoring efforts and corresponding I/I analysis.

Per the Village GIS, basins BODE-04 and WL-05 include 26,020 linear feet of sanitary sewer and 119 sanitary manholes. The SSES work includes smoke testing, dye flooding, manhole inspection, and CCTV review with recommendations. See Exhibit A for the detailed scope of services as they relate to the SSES activities. As with previous studies, the Village will be providing the sewer televising services, SewerAI (via RJN's partnership agreement) will be utilized to PACP code the CCTV, and RJN will be responsible for QC and analysis of the footage.

Design and Bidding Engineering Services

The engineering services for 2026/27 will be manhole rehabilitation design and bidding services for previously inspected manholes. The basins for manhole rehabilitation design and bidding services include:

- Bode-00, 01, 02, and 03 (inspected in 2019)
- SCHMWL-01, 02, 03, and 04 (inspected in 2016)
- Kessel-01 (inspected in 2021)

The design associated in this proposal includes rehabilitation of High Priority defects identified from manhole inspection activities ranging back to 2016. It is imperative that these efforts are completed in order to maintain good standing with the MWRD IICP and the requirements to fix High Priority defects within 3 years. While the time constraints for rehabilitation have not been met up to this point, due to budget limitations, MWRD has been satisfied with the efforts put forth in fixing the immediate needs of the mainline sewers and laterals. The high priority manhole rehabilitation will be designed and bid in accordance with the construction budget that was approved by the Village. It is expected to include manhole lining, replacement, grading, and other rehabilitation techniques. The design and bidding will be completed near the end of fiscal year 2026/27 in order to complete construction in the 2027/28 fiscal year.

Following this design, the oldest remaining manhole inspections in need of rehabilitation will be from 2020, and the Village will be in a good position for design and construction for those identified high priority defects in subsequent years.

Construction Engineering Services

The construction services will be Construction Management and Observation of the Small ACP (10" and under) High Priority Lining, for which the design was completed in 2025/26. The scope of construction is anticipated to include services for the following work: approximately 16,130 LF of sewer cleaning, televising, and lining (6" - 10" diameter), one (1) point repair, cutting eleven (11) protruding taps, dye testing of eleven (11) existing service connections, reinstatement of two-hundred fourteen (214) laterals, grouting of one-hundred twenty-six (126) laterals, cleaning and televising of ninety (90) laterals, lining of eighty-eight laterals (88), traffic control and protection, restoration and other related and incidental work. The rehabilitation shall be performed by private contractors, chosen through bidding, while being managed and supervised by RJN construction staff.

Flow Monitoring Services

Flow Monitors were installed in 2025/26 in order to capture data from the higher precipitation season in the areas that have had all high priority defects addressed. These basins include Brain-01, 02, 03, 04, 05, and 06 (referred to as North Braintree). Four months of the monitoring period and the analysis will be part of this project. The intention of the monitoring period is to assess the progress of the I/I remediation efforts that the Village has been implementing and benchmark these new I/I levels for these basins.

Program Management & Clarity™

Overall management and planning of the sanitary program to meet MWRD requirements will also be provided. Hours for project management will be allocated in each task described hereinabove.

RJN will provide access to its online data hosting platform **Clarity™**, that includes status of data collection, access to data collected, and all field collected media.

Assuring Quality and Safety

RJN is committed to providing **quality** deliverables. The data collected as a part of this project will be critical in evaluating the Village's sanitary system. RJN's internal quality control (QC) tools within our in-house data management software, as well as our corporate training and QC processes in place will ensure that the project will provide value for the Village.

As an employee-owned firm, RJN's commitment to the **safety** of our employees, Village employees, and the public is paramount. That commitment to safety is demonstrated in our internally developed and audited safety program where our goal is to have all field staff, engineers, and project managers "RJN Safety Certified." Included in the certification is confined-space entry training, temporary traffic control, OSHA 10-hour, fall protection, and many more. Every project follows an RJN Health and Safety Plan (HASP) when completing any field work.

Price and Schedule Summary

This project will be invoiced on a Time and Material and Unit Price basis for a total not-to-exceed fee of **$406,572** (budgetary) as described in the following table and in detail in Exhibit B:

Task Description	FY2026/27 Cost
MWRD Annual Reporting	$14,000
SSES – Bode-04, WL-05	$89,353
Rehabilitation Design and Bidding – Manhole	$113,503
Construction Management – Small ACP HP Lining	$144,916
Flow Monitoring – North Braintree	$44,800
TOTAL	**$406,572**

The project is expected to be completed by April 30, 2027 based on a Notice to Proceed by May 31, 2026. Complete Scope of Services, Pricing, Schedules, and Maps are provided in the following exhibits:

- Exhibit A – Scope of Services
- Exhibit B – Pricing
- Exhibit C – Schedule
- Exhibit D – Project Maps

We are looking forward to the opportunity to continue work with the Village of Schaumburg on this important project. It is our pleasure to submit this proposal to you. Please feel free to contact Tom at 224.587.7366 if you would like to discuss this proposal or have any questions.

Sincerely,



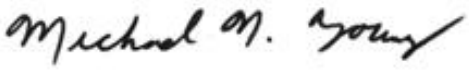

Thomas Romza, PE
Regional Manager

Michael Young, PE
Senior Vice President

EXHIBIT A
SCOPE OF SERVICES

RJN is proposing the following scope of services to conduct the Fiscal Year 2026/27 MWRD IICP Services for the Village of Schaumburg.

A. Project Kickoff

1. Conduct an in-person kickoff meeting with Village staff to discuss the project.
2. Prepare agenda, meeting minutes, and anticipated schedule.
3. Discuss logistics of details within each task of the project.

B. MWRD Annual Reporting

1. Work with the Village to compile the annual submittal to MWRD for Article 8. RJN will complete the following forms;
    a. Long-Term Requirement Annual Summary Report;
    b. High Priority Deficiency Form;
    c. Summary of rehabilitation plan, including a Capital Improvement Program (CIP) as applicable; and
    d. Prioritization/Activity Map Update.
2. Submit completed MWRD forms.
3. Provide overall management of the MWRD program.

C. Cedarcrest Area SSES of basins Bode-04 and WL-05

1. Smoke Testing
    a. Prepare a draft resident smoke testing notification letter for the RJN to send to the affected residents and business owners. The letters will include RJN contact information for use during the smoke testing. If desired, these letters can be formatted as a public service announcement, billing insert, and/or used as a Reverse 911 message sent by the Village. If necessary, provide bilingual letter in Spanish.
    b. Prepare smoke testing door hangers to be hung by RJN staff at each address less than one week prior to smoke testing. The door hangers will also include RJN contact information and can be bilingual if necessary.
    c. Notify the Village and the local fire and police departments of planned smoke testing activities, including daily updates.
    d. Provide equipment, personnel, and smoke as necessary for smoke testing.
    e. During smoke testing, erect smoke testing signs near the testing area and answer resident and Village questions on-site as well as through phone calls.
    f. Use handheld electronic data collection equipment for collecting smoke testing data.
    g. Smoke test the sanitary sewers as outlined, approximately **26,020** linear feet.
    h. GPS locate each identified defect and take a minimum of one digital photograph of each defect.

i. Upload and provide access to smoke testing data and photos on the web viewer Clarity®.

2. Dyed Water Flooding
    a. Provide equipment, personnel, and dye as necessary for dyed water flooding. Water to be provided by Village.
    b. Work with Village-provided televising staff or subcontractor to perform televising during dyed water flooding setups. **Subconsultant services are not included in this proposal, only coordination.**
    c. Set up and complete dyed water flooding as outlined, for up to **2 setups**. Document results with digital photographs of the dye test setup and if possible dyed water entering the sewer (where applicable).
    d. Locate each identified defect relative to segment manholes and take at least one digital photograph or video of each defect (where applicable).
    e. Upload and provide access to dyed water flooding data on the web viewer Clarity®.
3. Manhole Inspection
    a. Provide equipment and personnel as necessary for manhole inspections, up to **119** manholes.
    b. Use handheld electronic data collection equipment for collecting manhole inspection data.
    c. Complete surface manhole inspections for manholes as outlined. Collect the following attribute data, as it can be determined:
        i. Manhole diameter and material;
        ii. Connecting sewer diameters, invert measurements, and flow direction;
        iii. GPS data of the manhole x, y, and z coordinates.
    d. Identify and document manhole condition, including:
        i. Direct evidence of I/I;
        ii. Open pickholes in lid;
        iii. Cover, frame, adjusting ring, and seal condition, including needed adjustments;
        iv. Cone condition and defects;
        v. Wall condition and defects;
        vi. Trough and bench condition and defects; and
    e. Take a minimum of 3 digital photographs at each manhole structure
        i. Surrounding area;
        ii. Manhole cover; and
        iii. Topside - looking down;
    f. Take a 360-degree video at each structure using a remote camera to provide a 360-degree view of the entire structure.
    g. Upload and provide access to manhole inspection data and media on the web viewer Clarity®.
    h. Use data collected through field services to provide updates needed to the Village GIS database. Mapping updates may include:

i. Addition of structures located during field investigations;
ii. Updating of structure location;
iii. Removal of structures confirmed to not exist;
iv. Updating connectivity and flow direction.

i. Provide updates to Village GIS geodatabase in a data transfer with Village staff.
j. Coordinate with Village GIS staff for "check-in/check-out" procedures.
k. Assist the Village with incorporation of changes and information into Village GIS infrastructure and coordinate with other Village consultants on incorporation of GIS data.

4. CCTV Review
   a. Provide autocoding software and coordination for Village CCTV, up to **26,020** linear feet.
   b. Upload and provide access to CCTV data and videos on the web viewer Clarity®.
   c. Provide coordination with the Village's televising crew for areas to be televised and obtaining televising videos.
   d. Provide equipment and personnel as necessary for televising video QC.
   e. Review and QC the CCTV using PACP-certified personnel and PACP coding standards and edit as necessary.
5. Analysis and Report
   a. Provide data analysis as follows:
      i. Compile field data and develop complete list of defects.
      ii. Map results in GIS.
      iii. Assign an estimated flow to each defect; and
      iv. Determine a level of severity and/or preliminary rehabilitation method for each manhole, pipe, or identified defect;
      v. Create a summary of estimate cost.
      vi. Development of a detailed rehabilitation schedule is not included in the scope but can be added if requested by the Village.
   b. Organize data from individual field services into a comprehensive summary report.
   c. Provide the following information for the summary report:
      i. Summary of work completed;
      ii. Map(s) of inspections, defects, and SSES findings.
      iii. Summary of deficiencies observed, and preliminary recommendations developed.
      iv. List(s) and map(s) of preliminary rehabilitation recommended.
      v. Recommendations for follow-up SSES work.
   d. Provide digital copies of data, GIS geodatabases, and photographs.

D. Design and Bidding Engineering Services

1. Bode-00, 01, 02, and 03, SCHMWL-01, 02, 03, and 04, Kessel-01 High Priority Manhole Rehabilitation Design and Bidding:

a. Identify high priority manhole repairs, manholes assessed for rehabilitation from 2016, 2019, and 2021 inspections. Review recommended rehabilitation methods with Village to confirm use of the most effective approach, based on cost, location, I/I reduction, structural improvement, and Village standards.
b. Provide the following field checks:
    i. Identify surface restoration requirements (as applicable);
    ii. Identify potential traffic control needs during construction; and
    iii. QA/QC manhole recommendations
c. Prepare detailed schedules and bid tab for recommended manhole rehabilitation.
d. Prepare manhole rehabilitation exhibits to be included in the Bid Package, including the following:
    i. Manhole rehabilitation location exhibits; and
    ii. Project and Village specific Details & General Notes (if needed).
e. Prepare bid package with plans, schedules, Village front end bid documents, and detailed specifications. Prepare draft bidding documents for Village review.
f. Prepare an opinion of probable construction cost.
g. Bidding Assistance:
    i. Send advertisement to expected bidders;
    ii. Prepare Addenda;
    iii. Respond to Contractors' questions; and
    iv. Prepare letter of recommendation for award.

E. Construction Engineering Services

1. <u>Small ACP (10" and under) Sanitary Sewer High Priority Lining Construction Management and Observation:</u>
    a. Pre-Construction Assistance:
        i. Prepare Contract Documents for execution by Village and Contractor. Review Contractor's insurance documents.
        ii. Coordinate and attend preconstruction meeting. Prepare and distribute meeting minutes.
        iii. Review Contractor's shop drawings and other construction submittals, traffic control plans, pre-construction surface videos and construction phasing.
    b. Ensure contractor provides notification to the residents of impacts to sewer service and access to driveways.
    c. Provide a combination of full and part-time construction observation for the duration of the project. RJN proposes to be on-site full time when the point repairs are completed. Part-time observation will be provided for restoration, manhole rehab, and lining. Part-time supervision will be approximately four hours per day, when the Contractor is onsite and working. This proposal is

based on providing a total of 340 hours of full and part-time construction observation services.

d. Provide daily documentation of the construction activities when on-site, including maintaining a daily project journal, taking digital photographs of all phases of the project, and taking measurements for all quantities installed. RJN will provide access of daily reports to the Village for review via Clarity®, the RJN online platform.
e. Provide periodic inspection of traffic control measures to ensure roadways remain open and driveways/sidewalks are not blocked for extended periods. Identify potential traffic control and surface rehabilitation needs during construction, observe construction phase J.U.L.I.E. locates and identify potential utility conflicts for locations requiring excavation.
f. Alert the Contractor if equipment or materials are being installed prior to material submittal approval or if the wrong materials are being used. Provide field checks of materials and equipment, including enforcement of material testing.
g. Inspect each manhole and surrounding area during and after construction, to ensure no damage has occurred. This includes the final walk through, preparation of punch list, and final inspection.
h. Provide observation services during construction testing where applicable. Review testing documentation submittals for compliance with plans and specifications. Prepare a preliminary and final punchlist. Submit to the Village for review and incorporate Village's comments. Submit to Contractor for completion.
i. Provide personnel as necessary for pre/post rehab televising video review. Review sewer televising videos using PACP-certified personnel. Identify work completed that is in compliance with the Contract Documents and any deficiencies in the final work product.
j. Provide general project management and coordinate meetings with Village and Contractor as agreed upon at preconstruction meeting. Coordinate project with the Village, and Contractor, including updates on progress. Provide contract management, including review of Contractor's payment requests, preparation of change orders, coordination of contract closeout and preparation of a final acceptance letter.
k. Obtain as-built documents from the Contractor and prepare for the Village a set of final construction documents in original AutoCAD or GIS formats. Obtain project specific rehabilitation changes to the Village's collection system and provide to the Village for inclusion in their GIS. Prepare a GIS layer update of the rehabilitation work and rehabilitation locations.
l. Prepare and provide record drawings from the contractor's as-built plans.

F. North Braintree Post High Priority Rehabilitation Flow Monitoring

Six (6) Village owned flow monitors and two (2) RJN rain gauges were installed in fiscal year 2025/26. The data collection and analysis of the flow monitoring is part of this project and is outlined as follows:

1. Provide meter and rain gauge maintenance as necessary to keep equipment in proper operation for the duration of the monitoring period.
2. Perform a total of five calibration measurements during the flow monitoring period.
3. Procure spare parts and replacement equipment, such as batteries, and desiccants, as needed to keep meters and rain gauges working and within operating standards. Meter and sensor replacement is not included for Village-owned meters.
4. Perform final calibration measurements at each site and remove the flow meters and rain gauges. Clean and return Village-owner flow meter equipment.
5. Upload and provide access to flow monitoring data and photos on the web viewer Clarity®
6. Process the collected raw data. Analyze the processed data for wet- and dry-weather flow patterns. Create hydrographs for each meter and determine wet-weather peaking factors at standard storm recurrence and durations for each basin.
7. Perform an inflow and infiltration analysis, including:
    a. Inflow peaking factors
    b. Regression analysis for peaking factor prediction
    c. Scattergraphs and hydrographs
    d. Capacity analysis including downstream control and surcharging assessment
    e. Post rehabilitation I/I mitigation assessment
8. Provide the following information for the summary report:
    a. Details on each meter and rain gauge location
    b. Summary of the flow and rainfall data collected
    c. Conclusions from the flow metering, including evidence of downstream control, hydraulic bottlenecks, levels of infiltration and inflow (I/I), and a comparison to historical I/I analysis.
    d. Adequacy of the existing system to handle existing flows
    e. Recommendations for the next appropriate steps including reduction in I/I
9. Provide digital copies of data, GIS geodatabases, and photographs.

Items Requested from the Village

1. Access to structures for inspection. Assistance locating or opening seized/buried manholes as required. Assist RJN to access backyards when necessary.
2. Assistance with traffic control in high traffic areas, as necessary.
3. Sewer televising for CCTV review and during Dyed Water Flooding inspections and submittal of videos and reports
4. Water for Dyed Water Flooding inspections.
5. Upload into autocoding software “usable” CCTV of sanitary sewers.

6. Tree removals, as necessary, prior to the point repair work.
7. Help coordinating and communicating with all project stakeholders and residents.
8. Provide GIS data as necessary.
9. Review and comment on prepared bidding documents including any project specific modifications for this project.
10. Publish construction bid using the Village's standard procurement procedures.
11. Coordination with RJN in answering bid-related questions in formal addenda.

EXHIBIT B
PRICING

Pricing for the FY 2026/2027 IICP Services project is as follows.

Pricing Terms for Invoicing: Time and Materials, Unit Price

Not-To-Exceed Total Cost: $406,572

Task #	Task Description			Hours	Cost
1000	MWRD IICP Annual Reporting			85	$ 14,000.00
1001	Long-term requirements annual summary report			22	$ 3,310.00
1002	High priority deficiency form			11	$ 1,820.00
1003	CIP Planning			14	$ 2,278.00
1004	Prioritization/activity map updates			13	$ 1,861.00
1005	2025/26 program management services			25	$ 4,731.00
2000	SSES of Meter Basins Bode-04 and WL-05			543	$ 89,353.00
2001	Smoke Testing (26,020 linear feet) and Recommendations			245	$ 31,877.00
2002	Dyed Water Flooding and Recommendations (2 setups)			40	$ 5,335.00
2003	Manhole Inspection (119 manholes), Survey, and Recommendations			141	$ 18,540.00
2004	CCTV Autocode/QC and Recommendations (26,020 linear feet)			46	$ 16,583.00
2005	Final Analysis and Draft/Final Report			71	$ 11,416.00
2006	Direct Costs (Equipment, Mailings, Mileage, Etc…)			-	$ 5,602.00
3000	Rehabilitation Design - Manholes			688	$ 113,503.00
3001	Bode-00, 01, 02, 03			262	$ 42,964.00
3002	SCHWL-01, 02, 03, 04			262	$ 42,964.00
3003	Kessel-01			126	$ 20,703.00
3004	Manhole Rehab Bidding Services			38	$ 6,872.00
4000	Construction Management and Observation			801	$ 144,916.00
4001	ACP (10" and Under) HP Lining			801	$ 141,074.00
4002	Direct Costs (mileage)			-	$ 3,842.00
			TOTAL T&M	**2117**	**$361,772.00**
5000	Flow Monitoring	Units	Quantity	Cost/Unit	$ 44,800.00
5001	Meter/RG Cals, Maint, and Data Review (4-months)	Me-Mo	24	$ 1,050.00	$ 25,200.00
5002	Meter Removal and Return, Finalization	Meter	6	$ 1,350.00	$ 8,100.00
5003	Analysis and Reporting	LS	1	$11,500.00	$ 11,500.00
				TOTAL UNIT PRICE	**$ 44,800.00**
				TOTAL CONTRACT AMOUNT	**$ 406,572.00**

Hourly Rate Schedule

	Classification	2026 Rates*
PD	Project Director	$270.00
SPM	Senior Project Manager	$240.00
PM	Project Manager	$205.00
SCM	Sr. Construction Manager	$185.00
CM	Construction Manager	$170.00
CO	Construction Observer	$150.00
SPE	Senior Project Engineer	$175.00
PE	Project Engineer	$160.00
EI	Engineer I	$145.00
GSS	GIS Specialist	$140.00
GIS	GIS Analyst	$120.00
SDA	Senior Data Analyst	$140.00
DA	Data Analyst	$120.00
FM	Field Manager	$125.00
FS	Field Supervisor	$115.00
FT	Field Technician	$105.00
AS	Administrative Support	$115.00
	**Rates valid through 12/31/2026 and are subject to an annual increase.*	

Notes

- The Hourly Rate Schedule is valid until April 30, 2027. Following that date, rates may be subject to an annual increase.

Contract Option

This contract can be amended to include additional work upon joint approval by the Village and RJN.

EXHIBIT C
PROPOSED SCHEDULE

RJN is prepared to start work immediately upon an Agreement. The schedule for this project is summarized as follows:

Task	Timeline
MWRD Annual Reporting	Submit draft of MWRD submittal by February 17, 2027, with submittal to MWRD by **March 1, 2027** deadline.
SSES of BODE-04 and WL-05	Planning will begin upon NTP, with all SSES activities and reporting expected to be complete by **February 2027**.
Rehabilitation Design and Bidding	Design shall be completed by **March 2027 while** Bidding will start in **April of 2027**.
Construction Management and Observation	Pending plan review by the Village, construction is expected to begin in **June of 2026**.
Flow Monitoring North Braintree	Flow monitors are installed and reporting is expected by **October 2026**

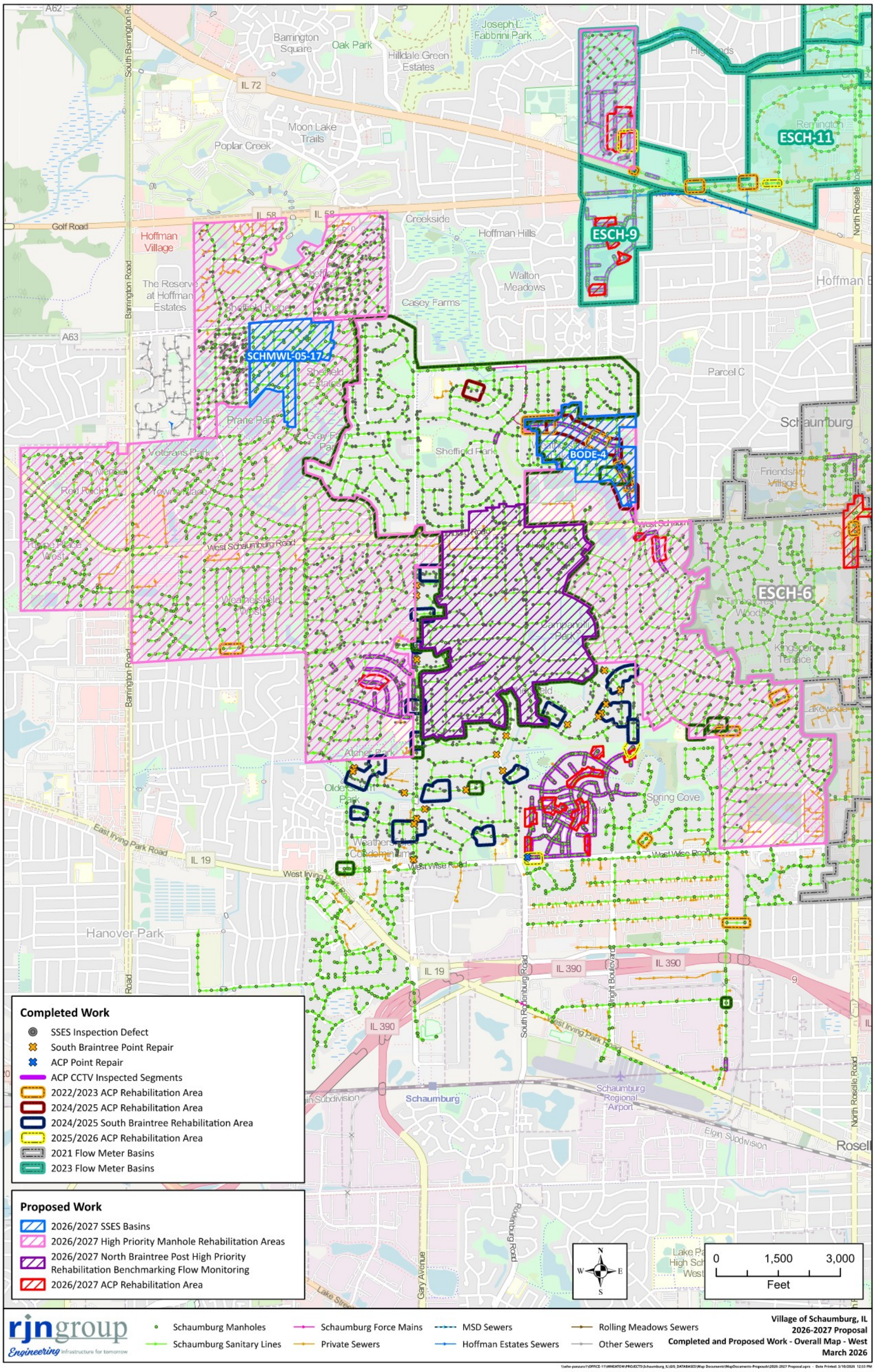
ESCH-11
ESCH-9
ESCH-6
SCHMWL-05-17
BODE-4
Completed Work
SSES Inspection Defect
South Braintree Point Repair
ACP Point Repair
ACP CCTV Inspected Segments
2022/2023 ACP Rehabilitation Area
2024/2025 ACP Rehabilitation Area
2024/2025 South Braintree Rehabilitation Area
2025/2026 ACP Rehabilitation Area
2021 Flow Meter Basins
2023 Flow Meter Basins
Proposed Work
2026/2027 SSES Basins
2026/2027 High Priority Manhole Rehabilitation Areas
2026/2027 North Braintree Post High Priority Rehabilitation Benchmarking Flow Monitoring
2026/2027 ACP Rehabilitation Area
Schaumburg Manholes
Schaumburg Sanitary Lines
Schaumburg Force Mains
Private Sewers
MSD Sewers
Hoffman Estates Sewers
Rolling Meadows Sewers
Other Sewers
0
1,500
3,000
Feet
Village of Schaumburg, IL
2026-2027 Proposal
Completed and Proposed Work - Overall Map - West
March 2026

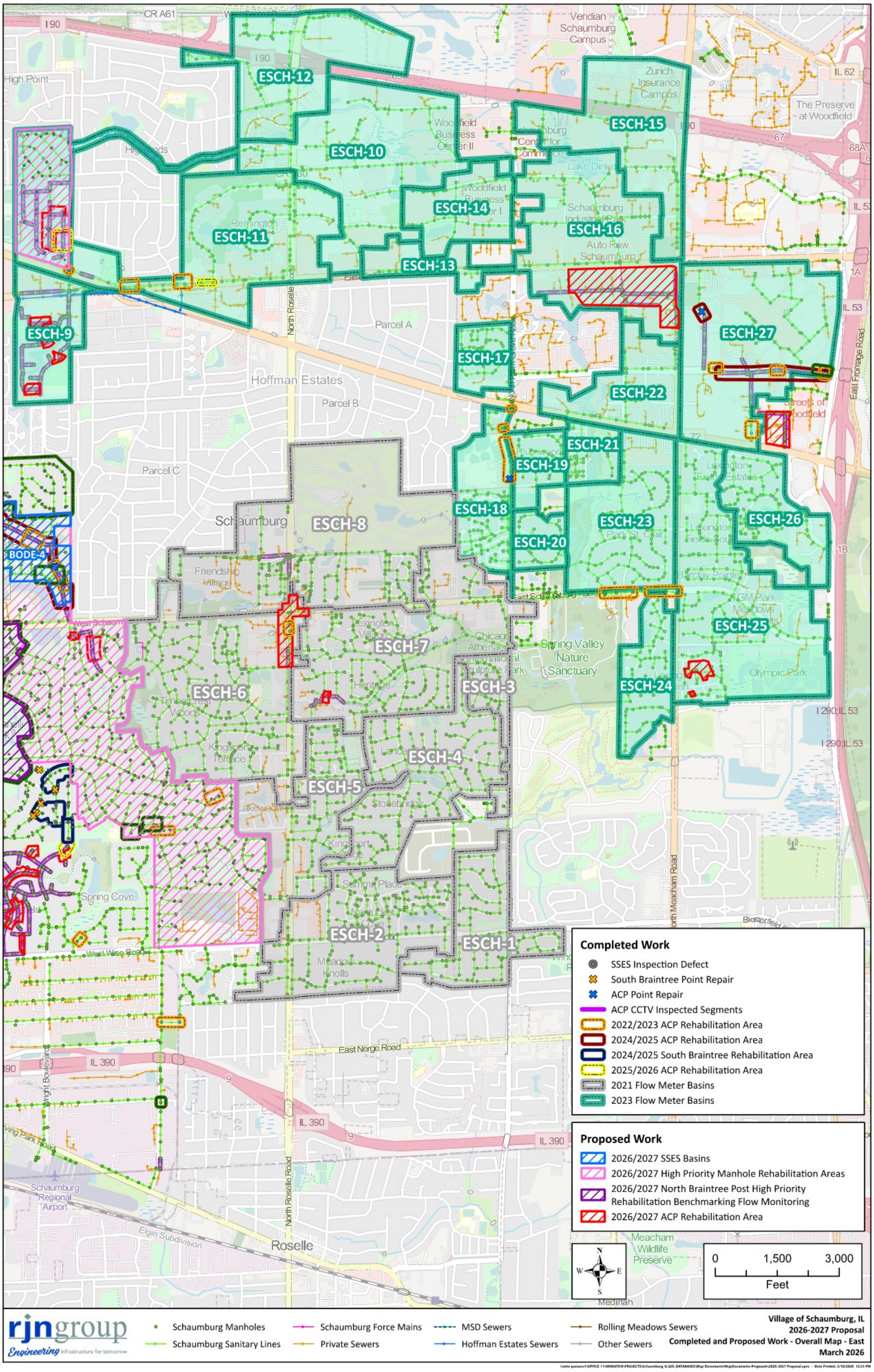
ESCH-12
ESCH-10
ESCH-15
ESCH-14
ESCH-11
ESCH-16
ESCH-13
ESCH-9
ESCH-27
ESCH-17
ESCH-22
ESCH-21
ESCH-19
ESCH-18
ESCH-23
ESCH-26
ESCH-20
ESCH-8
BODE-4
ESCH-25
ESCH-7
ESCH-3
ESCH-6
ESCH-24
ESCH-4
ESCH-5
ESCH-2
ESCH-1
I 90
IL 62
IL 53
IL 390
I 290;IL 53
Veridian Schaumburg Campus
Zurich Insurance Campus
The Preserve at Woodfield
Woodfield Business Center II
Schaumburg Business Center for Commerce
Lake Dinkel
Woodfield Business Center I
Schaumburg Industrial Park
Auto Row Schaumburg
Streets of Woodfield
High Point
Highlands
Remington
Parcel A
Parcel B
Parcel C
Hoffman Estates
Schaumburg
Friendship Village
Lexington Village
Heritage
Timber Crest Woods
Kingsport Terrace
Lakewood
Stonebridge
Kingsport
Salmon Place
Nantucket Cove
Spring Cove
Meadow Knolls
Chicago Athenaeum International Sculpture Park
Spring Valley Nature Sanctuary
Olympic Park
Barclay Pointe
Lexington Fields
Park St Clair
Schaumburg Regional Airport
Roselle
Meacham Wildlife Preserve
Medinah
North Roselle Road
East Nerge Road
Elgin Subdivision
Wright Boulevard
East Frontage Road
North Meacham Road
Completed Work
SSES Inspection Defect
South Braintree Point Repair
ACP Point Repair
ACP CCTV Inspected Segments
2022/2023 ACP Rehabilitation Area
2024/2025 ACP Rehabilitation Area
2024/2025 South Braintree Rehabilitation Area
2025/2026 ACP Rehabilitation Area
2021 Flow Meter Basins
2023 Flow Meter Basins
Proposed Work
2026/2027 SSES Basins
2026/2027 High Priority Manhole Rehabilitation Areas
2026/2027 North Braintree Post High Priority Rehabilitation Benchmarking Flow Monitoring
2026/2027 ACP Rehabilitation Area
N
W
E
S
0
1,500
3,000
Feet
rjn group
Engineering infrastructure for tomorrow
Schaumburg Manholes
Schaumburg Sanitary Lines
Schaumburg Force Mains
Private Sewers
MSD Sewers
Hoffman Estates Sewers
Rolling Meadows Sewers
Other Sewers
Village of Schaumburg, IL
2026-2027 Proposal
Completed and Proposed Work - Overall Map - East
March 2026

RESOLUTION NO. R-26-____

A RESOLUTION AUTHORIZING THE VILLAGE MANAGER AND VILLAGE CLERK TO EXECUTE AN AGREEMENT FOR THE TWELFTH YEAR OF METROPOLITAN WATER RECLAMATION DISTRICT OF GREATER CHICAGO INFILTRATION/INFLOW CONTROL PROGRAM – PHASES I, II, AND III WITH RJN GROUP, INC.

WHEREAS, the President and Board of Trustees wish to execute an agreement with RJN Group, Inc. of Wheaton, IL for the Twelfth Year of Metropolitan Water Reclamation District of Greater Chicago Infiltration/Inflow Control Program – Phases I, II, and III; and

WHEREAS, it would be in the best interests of the citizens of Schaumburg to execute the attached Agreement, Exhibit "A".

NOW, THEREFORE, BE IT RESOLVED BY THE PRESIDENT AND BOARD OF TRUSTEES OF THE VILLAGE OF SCHAUMBURG:

SECTION ONE: That the Village Manager and Village Clerk be and hereby are authorized and directed to execute the attached Agreement, Exhibit "A", between the Village of Schaumburg and RJN Group, Inc. of Wheaton, IL**.**

SECTION TWO: That the Village Manager and Village Clerk be and hereby are authorized to sign any documents in furtherance of this Resolution.

SECTION THREE: That this Resolution shall be in full force and effect after passage and approval as required by law.

AYES:

NAYS:

ABSENT:

PASSED AND APPROVED this _____ day of _____, 2026.

_____
Village President

ATTEST:

_____
Village Clerk

VILLAGE OF SCHAUMBURG
PROFESSIONAL SERVICES AGREEMENT FOR
FISCAL YEAR 2026-27 MWRD IICP SERVICES SSES
REHABILITATION DESIGN AND CONSTRUCTION SERVICES

THIS AGREEMENT is dated as of the ___day of _____, 20_ ***("Agreement")*** and is by and between the **VILLAGE OF SCHAUMBURG,** an Illinois municipal corporation ***("Village")*** and the Consultant identified in Subsection 1A below.

IN CONSIDERATION OF the recitals and the mutual covenants and agreements set forth in the Agreement, and pursuant to the Village's statutory powers, the parties agree as follows:

SECTION 1. CONSULTANT.

A. Engagement of Consultant. The Village desires to engage the Consultant identified below to provide all necessary professional consulting services and to perform the work in connection with the project identified below:

Consultant Firm Name: RJN:Group
Street Address: 2655 Warrenville Road, Suite 225
City, State, Zip: Downers Grove, IL 60515
Telephone: 630-682-4700
Email: myoung@lrjnmail.com

B. Project Description.
Provide professional engineering and specialty field services to assist the Village in meeting the long-term program requirements of MWRD Infiltration/Inflow Control Program (IICP). Services related to flow monitoring, pipe assessment, design of sanitary sewer rehabilitation, and construction observation of sanitary sewer rehabilitation.

C. Representations of Consultant. The Consultant has submitted to the Village a description of the services to be provided by the Consultant, a copy of which is attached as Exhibit 1 to this Agreement ***("Services")*** The Consultant represents that it is financially solvent, has the necessary financial resources, and is sufficiently experienced and competent to perform and complete the professional consulting services set forth in Exhibit 1 in a manner consistent with the standards of professional practice by recognized consulting firms providing services of a similar nature.

D. Agreement Amount. The total amount billed by the Consultant for the Services under this Agreement shall not exceed $406,572 as outlined in Exhibit 1, including reimbursable expenses as identified in Exhibit 1, unless amended pursuant to Subsection 8A of this Agreement.

SECTION 2. SCOPE OF SERVICES.

A. Retention of the Consultant. The Village retains the Consultant to perform, and the Consultant agrees to perform, the Services.

B. Services. The Consultant shall provide the Services pursuant to the terms and conditions of this Agreement.

C. Commencement; Time of Performance. The Consultant shall commence the Services immediately upon receipt of written notice from the Village that this Agreement has been fully executed by the Parties or on the date specified in Exhibit 1 (the ***"Commencement Date"***). The Consultant shall diligently and continuously prosecute the Services until the completion of the Services, but in no event later than 365 days after the date of the execution of this Agreement (**"Time *of Performance"*).**

D. Reporting. The Consultant shall regularly report to the Village, regarding the progress of the Services during the term of this Agreement.

SECTION 3. COMPENSATION AND METHOD OF PAYMENT.

A. Agreement Amount. The total amount billed for the Proposal during the term of this Agreement shall not exceed the amount identified as the Agreement Amount in Subsection 1D of this Agreement, without the prior express written authorization of the Village.

B. Invoices and Payment. The Consultant shall be paid as provided in Exhibit 1. The Consultant shall submit invoices to the Village in an approved format for those portions of the Services performed and completed by the Consultant. The amount billed in any such invoice shall be based on the method of payment set forth in Exhibit 1. The Village shall pay to the Consultant the amount billed within 30 days after its receipt and approval of such an invoice.

C. Records. The Consultant shall maintain records showing actual time devoted and costs incurred, and shall permit the authorized representative of the Village to inspect and audit all data and records of the Consultant for work done under the Agreement. The records shall be made available to the Village at reasonable times during the Agreement period, and for three years after the termination of the Agreement.

D. Claim In Addition To Agreement Amount. If the Consultant wishes to make a claim for additional compensation as a result of action taken by the Village, the Consultant shall provide written notice to the Village of such claim within 7 days after occurrence of such action as provided by Subsection 8D of this Agreement, and no claim for additional compensation shall be valid unless made in accordance with this Subsection. Any changes in the Agreement Amount shall be valid only upon written amendment pursuant to Subsection 8A of this Agreement. Regardless of the decision of the Village relative to a claim submitted by the Consultant, the Consultant shall proceed with all of the Services required to complete the Services under this Agreement as determined by the Village without interruption.

E. Taxes, Benefits and Royalties. The Agreement Amount includes all applicable federal, state, and local taxes of every kind and nature applicable to the Services as well as all taxes, contributions, and premiums for unemployment insurance, old age or retirement benefits, pensions, annuities, or similar benefits and all costs, royalties and fees arising from the use on, or the incorporation into, the Services, of patented or copyrighted equipment, materials, supplies, tools, appliances, devices, processes, or inventions. All claim or right to claim additional compensation by reason of the payment of any such tax, contribution, premium, costs, royalties, or fees is hereby waived and released by Consultant.

F. Final Acceptance. The Services, or, if the Services are to be performed in separate phases, each phase of the Services, shall be considered complete on the date of final written acceptance by the Village of the Services or each phase of the Services, as the case may be, which acceptance shall not be unreasonably withheld or delayed.

SECTION 4. PERSONNEL; SUBCONTRACTORS.

A. **Key Project Personnel.** The Key Project Personnel identified in Exhibit 1 shall be primarily responsible for carrying out the Services on behalf of the Consultant. The Key Project Personnel shall not be changed without the Village's prior written approval.

B. **Availability of Personnel.** The Consultant shall provide all personnel necessary to complete the Services including, without limitation, any Key Project Personnel identified in this Agreement. The Consultant shall notify the Village as soon as practicable prior to terminating the employment of, reassigning, or receiving notice of the resignation of, any Key Project Personnel. The Consultant shall have no claim for damages and shall not bill the Village for additional time and materials charges as the result of any portion of the Services which must be duplicated or redone due to such termination or for any delay or extension of the Time of Performance as a result of any such termination, reassigning, or resignation.

C. **Approval and Use of Subcontractors.** The Consultant shall perform the Services with its own personnel and under the management, supervision, and control of its own organization unless otherwise approved by the Village in writing. All subcontractors and subcontracts used by the Consultant shall be acceptable to, and approved in advance by, the Village. The Village's approval of any subcontractor or subcontract shall not relieve the Consultant of full responsibility and liability for the provision, performance, and completion of the Services as required by the Agreement. All Services performed under any subcontract shall be subject to all of the provisions of this Agreement in the same manner as if performed by employees of the Consultant. For purposes of this Agreement, the term "Consultant" shall be deemed also lo refer to all subcontractors of the Consultant, and every subcontract shall include a provision binding the subcontractor to all provisions of this Agreement.

D. **Removal of Personnel and Subcontractors.** If any personnel or subcontractor fails to perform the Services in a manner satisfactory to the Village, the Consultant shall immediately upon notice from the Village remove and replace such personnel or subcontractor. The Consultant shall have no claim for damages, for compensation in excess of the amount contained in this Agreement or for a delay or extension of the Time of Performance as a result of any such removal or replacement.

SECTION 5. CONFIDENTIAL INFORMATION.

A. **Confidential Information.** The term ***"Confidential Information"*** shall mean information designated as "Confidential" in the possession or under the control of the Village relating lo the technical, business or corporate affairs of the Village; Village property; user information, including, without limitation, any information pertaining to usage of the Village's computer system, including and without limitation, any information obtained from server logs or other records of electronic or machine readable form; and the existence of, and terms and conditions of, this Agreement. Village Confidential Information shall not include information that can be demonstrated: (i) to have been rightfully in the possession of the Consultant from a source other than the Village prior to the lime of disclosure of said information lo the Consultant under this Agreement ***("Time of Disclosure");*** (ii) to have been in the public domain prior to the Time of Disclosure; (iii) to have become part of the public domain after the Time of Disclosure by a publication or by any other means except an unauthorized act or omission or breach of this Agreement on the part of the Consultant or the Village; or (iv) to have been supplied to the Consultant after the Time of Disclosure without restriction by a third party who is under no obligation to the Village to maintain such information in confidence.

B. No Disclosure of Confidential Information by the Consultant. The Consultant acknowledges that it shall, in performing the Services for the Village under this Agreement, have access to or be directly or indirectly exposed to Confidential Information. The Consultant shall hold confidential all Confidential Information and shall not disclose or use such Confidential Information without express prior written consent of the Village unless required to perform the Services set forth in this Agreement. The Consultant shall be permitted to disclose Confidential Information as necessary to its subcontractors to fulfill the obligations required by this Agreement. The Consultant shall use reasonable measures at least as strict as those the Consultant uses to protect its own confidential information. Such measures shall include, without limitation, requiring subcontractors of the Consultant to execute a non-disclosure agreement before obtaining access to Confidential Information.

SECTION 6. STANDARD OF CARE: INDEMNIFICATION: INSURANCE.

A. Standard of Care. The Consultant warrants that the Services shall be performed in accordance with the standards of professional practice, care, and dillgence practiced by recognized consulting firms in performing services of a similar nature in the same locale in existence at the time of performance of this Agreement. The standard of care expressed shall be in addition to any other representations expressed in the Agreement, or expressed or implied by law, which are hereby reserved unto the Village.

B. Indemnification. The Consultant shall, without regard to the availability or unavailability of any insurance either of the Village or the Consultant, indemnify and save harmless, the Village, its officials, and its employees, against any and all damages, liabilities, losses, and expenses, including reasonable attorneys' fees and administrative expenses recoverable under applicable law, to the extent arising, out of or caused by, the Consultant's negligent or wrongful acts or omissions in the performance of, or failure to perform, the Services or any part thereof, except to the extent caused by the negligence of the Village.

C. Insurance. Contemporaneous with the Consultant's execution of this Agreement, the Consultant shall provide certificates of insurance and upon request, policies of insurance, all with coverages and limits acceptable to the Village, and evidencing at least the minimum insurance coverages and limits as set forth in Exhibit 2 to this Agreement. But in no event shall any work begin without an insurance certificate or policy having been provided and approved by the Village. Such certificates shall be from companies with a general rating of A and a financial size category of Class X or better, in Best's Insurance Guide. Such certificates of insurance shall provide that no insurer change, modification in, or cancellation of any insurance shall become effective until the expiration of 30 days after written notice thereof shall have been given to the Village. The Consultant shall, at all times during the term of this Agreement, maintain and keep in force, at the Consultant's expense, the insurance coverages provided above, including without limitation at all times to meet the Standard of Care requirements of Subsection 6(A) of this section.

D. No Personal Liability. No elected or appointed official or employee of the Village shall be personally liable, in law or in contract, to the Consultant as the result of the execution of this Agreement. Likewise, no claims or suits shall be made against the employees of the Consultant as a result of the execution of this Agreement.

SECTION 7. CONSULTANT AGREEMENT GENERAL PROVISIONS.

A. Relationship of the Parties. The Consultant shall act as an independent contractor in providing and performing the Services. Nothing, in or done pursuant to this Agreement, shall be construed (i) to create the relationship of principal and agent, employer and employee, partners, or joint venturers between the Village and Consultant; or (ii) to create any relationship between the Village and any subcontractor of the Consultant.

B. Conflict of Interest. The Consultant represents and certifies that, to the best of its knowledge, (1) no Village employee or agent is interested in the business of the Consultant or this Agreement; (2) as of the date of this Agreement neither the Consultant nor any person employed or associated with the Consultant has any interest that would conflict in any manner or degree with the performance of the obligations under this Agreement; and (3) neither the Consultant nor any person employed by or associated with the Consultant shall at any time during the term of this Agreement obtain or acquire any interest that would conflict in any manner or degree with the performance of the obligations under this Agreement.

C. No Collusion. The Consultant represents and certifies that the Consultant is not barred from contracting with a unit of state or local government as a result of (i) a delinquency in the payment of any tax administered by the Illinois Department of Revenue unless the Consultant is contesting, in accordance with the procedures established by the appropriate revenue act, its liability for the tax or the amount of the tax, as set forth in Section 11-42.1-1 *et seq.* of the Illinois Municipal Code, 65 ILCS 5/11-42.1-1 *et seq.;* or (ii) a violation of either Section 33E-3 or Section 33E-4 of Article 33E of the Criminal Code, 720 ILCS 5/33E-1 *et* seq. The Consultant represents that the only persons, firms, or corporations interested in this Agreement as principals are those disclosed to the Village prior to the execution of this Agreement, and that this Agreement is made without collusion with any other person, firm, or corporation. If at any time it shall be found that the Consultant has, in procuring this Agreement, colluded with any other person, firm, or corporation, then the Consultant shall be liable to the Village for all loss or damage that the Village may suffer, and this Agreement shall, at the Village's option, be null and void.

D. Sexual Harassment Policy. The Consultant certifies that it has a written sexual harassment policy in full compliance with Section 2-105(A) (4) of the Illinois Human Rights Act, 775 ILCS 5/2-105(A) (4).

E. Patriot Act Compliance. The Consultant represents and warrants to the *Village* that neither it nor any of its principals, shareholders, members, partners, or affiliates, as applicable, is a person or entity named as a Specially Designated National and Blocked Person (as defined in Presidential Executive Order 13224) and that it is not acting, directly or indirectly, for or on behalf of a Specially Designated National and Blocked Person. The Consultant further represents and warrants to the Village that the Consultant and its principals, shareholders, members, partners, or affiliates, as applicable, are not, directly or indirectly, engaged in, and are not facilitating, the transactions contemplated by this Agreement on behalf of any person or entity named as a Specially Designated National and Blocked Person. The Consultant hereby agrees to defend, indemnify and hold harmless the Village, its corporate authorities, and all Village elected or appointed officials, officers, employees, agents, representatives, engineers, and attorneys, from and against any and all claims, damages, losses, risks, liabilities, and expenses (including reasonable attorneys' fees and costs) arising from or related to any breach of the representations and warranties in this subsection.

F. **Termination.** Notwithstanding any other provision hereof, the Village may terminate this Agreement at any time upon 15 days prior written notice to the Consultant. In the event that this Agreement is so terminated, the Consultant shall be paid for Services actually performed and reimbursable expenses actually incurred, if any, prior to termination, not exceeding the value of the Services completed as determined as provided in Exhibit 1. The Consultant may also terminate the Agreement in the event the Village fails to make payment for services rendered, but only after the Consultant has provided written notice to the Village of the lack of payment and allowed the Village 30 days to make payment or contest the payment or amount.

G. **Term.** The time of performance of this Agreement, unless terminated pursuant to the terms of this Agreement, shall expire on the date the Village determines that all of the Services under this Agreement are completed or upon final payment to Consultant. A determination of completion shall not constitute a waiver of any rights or claims which the Village may have or thereafter acquire with respect to any breach hereof by the Consultant or any right of indemnification of the Village by the Consultant.

H. **Compliance with Laws and Grants.** Consultant shall give all notices, pay all fees, and take all other action that may be necessary to ensure that the Services are provided, performed, and completed in accordance with all required governmental permits, licenses, or other approvals and authorizations that may be required in connection with providing, performing, and completing the Services, and with all applicable building and zoning statutes, ordinances, rules, and regulations, and the Fair Labor Standards Act; any statutes regarding qualification to do business; any statutes prohibiting discrimination because of, or requiring affirmative action based on, race, creed, color, national origin, age, sex, or other prohibited classification, including, without limitation, the Americans with Disabilities Act of 1990, 42 U.S.C. §§ 12101 *et seq.*, and the Illinois Human Rights Act, 775 ILCS 5/1-101 *et seq.* Consultant shall also comply with all conditions of any federal, state, or local grant received by Village and made known to the Consultant with respect to this Agreement or the Services.

Consultant shall be solely liable for any fines or civil penalties that are imposed by any governmental or quasi-governmental agency or body that may arise, or be alleged to have arisen, out of or in connection with Consultant's, or its subcontractors', performance of, or failure to perform, the Services or any part thereof.

I. **Default.** If it should appear at any time that the Consultant has failed or refused to prosecute, or has delayed in the prosecution of, the Services with diligence at a rate that permits completion of the Services in full compliance with the requirements of this Agreement, or has otherwise failed, refused, or delayed to perform or satisfy the Services or any other material requirement of this Agreement (***"Event of Default"),*** and fails to cure any such Event of Default within ten business days after the Consultant's receipt of written notice of such Event of Default from the Village, then the Village shall have the right, without prejudice to any other remedies provided by law or equity, to pursue any one or more of the following remedies:

1. **Cure by Consultant.** The Village may require the Consultant, within a reasonable lime, to complete or correct all or any part of the Services that are the subject of the Event of Default; and to take any or all other action necessary to bring the Consultant and the Services into compliance with this Agreement.

2. **Termination of Agreement by Village.** The Village may terminate this Agreement without liability for further payment of amounts due or to become due under this Agreement.

3. **Withholding of Payment by Village.** The Village may withhold from any payment, whether or not previously approved, or may recover from the Consultant, any and all costs, including attorneys' fees and administrative expenses, incurred by the Village as the result of any Event of Default by the Consultant or as a result of reasonable actions taken by the Village in response to any Event of Default by the Consultant.

J. **No Additional Obligation.** The Parties acknowledge and agree that the Village is under no obligation under this Agreement or otherwise to negotiate or enter into any other or additional contracts or agreements with the Consultant or with any vendor solicited or recommended by the Consultant.

K. **Village Board Authority.** Notwithstanding any provision of this Agreement, any negotiations or agreements with, or representations by the Consultant to vendors shall be subject to the approval of the Village Board of Trustees. The Village shall not be liable to any vendor or other third party for any agreements made by the Consultant, purportedly on behalf of the Village, without the knowledge and approval of the Village Trustees.

L. **Mutual Cooperation.** The Village agrees to cooperate with the Consultant in the performance of the Services, including meeting with the Consultant and providing the Consultant with such non-confidential information that the Village may have that may be relevant and helpful to the Consultant's performance of the Services. The Consultant agrees to cooperate with the Village in the performance of the Services to complete the work and with any other consultants engaged by the Village.

M. **News Releases.** The Consultant shall not issue any news releases or other public statements regarding the Services without prior approval from the Village

N. **Ownership.** Designs, drawings, plans, specifications, photos, reports, information, observations, calculations, notes, and any other documents, data, or information, in any form, prepared, collected, or received by the Consultant in connection with any or all of the Services to be performed under this Agreement **("Documents'1** shall be and remain the exclusive property of the Village. At the Village's request, or upon termination of this Agreement, the Consultant shall cause the Documents to be promptly delivered to the Village upon payment of all sums due and owing Consultant under the Agreement. Any reuse of Documents other than for the purposes of this Agreement shall be at Village risk and Consultant shall not be liable for any reuse of the Documents.

0. **GIS Data.** ***[NOTE:*** **Use *this only if applicable]*** The Village has developed digital map information through Geographic Information Systems Technology ***("GIS Data')*** concerning the real property located within the Village. If requested to do so by the Consultant, the Village agrees to supply the Consultant with a digital copy of the GIS Data, subject to the following conditions:

1. **Limited Access to GIS Data.** The GIS Data provided by the Village shall be limited to the scope of the Services that the Consultant is to provide for the Village;

2. **Purpose of GIS Data.** The Consultant shall limit its use of the GIS Data to its intended purpose of furtherance of the Services; and

3. **Agreement with Respect to GIS Data.** The Consultant does hereby acknowledge and agree that:

a. **Trade Secrets of the Village.** The GIS Data constitutes proprietary materials and trade secrets of the Village and, shall remain the property of the Village;

b. **Consent of Village Required.** The Consultant will not provide or make available the GIS Data in any form to anyone without the prior written consent of the Village;

c. **Supply to Village.** At the request of the Village, the Consultant shall supply the Village with any and all information that may have been developed by the Consultant based on the GIS Data;

d. **No Guarantee of Accuracy.** The Village makes no guarantee as to the accuracy, completeness, or suitability of the GIS Data in regard to the Consultant's intended use thereof; and

e. **Discontinuation of Use.** At such time as the Services have been completed to the satisfaction of the Village, the Consultant shall cease its use of the GIS Data for any purpose whatsoever; and, upon request, an authorized representative of the Village shall be afforded sufficient access to the Consultant's premises and data processing equipment to verify that all use of the GIS Data has been discontinued.

SECTION 8. GENERAL PROVISIONS.

A. Amendment. No amendment or modification to this Agreement shall be effective unless and until such amendment or modification is in writing, properly approved in accordance with applicable procedures, and executed.

B. Assignment. This Agreement may not be assigned by the Village or by the Consultant without the prior written consent of the other party.

C. Binding Effect. The terms of this Agreement shall bind and inure to the benefit of the Parties hereto and their agents, successors, and assigns.

D. Notice. Any notice or communication required or permitted to be given under this Agreement shall be in writing and shall be delivered (i) personally, (ii) by a reputable overnight courier, (iii) by certified mail, return receipt requested, and deposited in the U.S. Mail, postage prepaid, (iv) by facsimile, or (v) by electronic internet mail ("e-mail"). Facsimile notices shall be deemed valid only to the extent that they are (a) actually received by the individual to whom addressed and (b) followed by delivery of actual notice in the manner described in either (i), (ii), or (iii) above within three business days thereafter at the appropriate address set forth below. E-mail notices shall be deemed valid and received by the addressee thereof when delivered by e-mail and (a) opened by the recipient on a business day at the address set forth below, and (b) followed by delivery of actual notice in the manner described in either (i), (ii) or (iii) above within three business days thereafter at the appropriate address set forth below. Unless otherwise expressly provided in this Agreement, notices shall be deemed received upon the earlier of (a) actual receipt; (b) one business day after deposit with an overnight courier as evidenced by a receipt of deposit; or (c) three business days following deposit in the U.S. mail, as evidenced by a return receipt. By notice complying with the requirements of this Subsection, each Party shall have the right to change the address or the addressee, or both, for all future notices and communications to such party, but no notice of a change of addressee or address shall be effective until actually received.

Notices and communications to the Village shall be addressed to, and delivered at, the following address:

Village of Schaumburg
714 S. Plum Grove Road
Schaumburg, Illinois 60193
Attention : Brent McQueen
E-mail: bmcqueen@schaumburg.com

Notices and communications to the Consultant shall be addressed to, and delivered at, the following address:

Consultant Firm Name: RJN GROUP
Street Address: 2655 Warrenville Road, Suite 225
City, State, Zip: Downers Grove, IL 60515
Attention: Michael Young
Facsimile: 630-682-4754
Email: myoung@rjnmail.com

E. **Third Party Beneficiary.** No claim as a third party beneficiary under this Agreement by any person, firm, or corporation other than the Consultant shall be made or be valid against the Village.

F. **Provisions Severable.** If any term, covenant, condition, or provision of this Agreement is held by a court of competent jurisdiction to be invalid, void, or unenforceable, the remainder of the provisions shall remain in full force and effect and shall in no way be affected, impaired or invalidated.

G. **Time.** Time is of the essence in the performance of this Agreement.

H. **Governing Laws.** This Agreement shall be interpreted according to the laws of the State of Illinois.

I. **Entire Agreement.** This Agreement constitutes the entire agreement between the parties and supersedes any and all previous or contemporaneous oral or written agreements and negotiations between the Village and the Consultant with respect to the Proposal and the Services.

J. **Waiver.** No waiver of any provision of this Agreement shall be deemed to or constitute a waiver of any other provision of this Agreement (whether or not similar) nor shall any such waiver be deemed to or constitute a continuing waiver unless otherwise expressly provided in this Agreement.

K. **Exhibit.** Exhibits 1 and 2, are attached hereto, and by this reference incorporated in and made a part of this Agreement. In the event of a conflict between the Exhibit and the text of this Agreement, the text of this Agreement shall control.

L. **Rights Cumulative.** Unless expressly provided to the contrary in this Agreement, each and every one of the rights, remedies, and benefits provided by this Agreement shall be cumulative and shall not be exclusive of any other such rights, remedies, and benefits allowed by law.

M. Counterpart Execution. This Agreement may be executed in several counterparts, each of which, when executed, shall be deemed to be an original, but all of which together shall constitute one and the same instrument.

[SIGNATURES FOLLOW]

VILLAGE OF SCHAUMBURG

By: _____
Village Manager

ATTEST:

By: _____
Village Clerk

CONSULTANT

By: Michael A. Young

TITLE: Senior Vice President

ATTEST:

By: Thomas Rouge

TITLE: REGIONAL MANAGER

EXHIBIT 1

SCOPE OF SERVICES

AGREEMENT AMOUNT

[TO BE PREPARED BY CONSULTANT AND ACCEPTABLE TO VILLAGE]

[INCLUDE HOURLY RATES, LUMP SUM AMOUNTS, REIMBURSABLE COSTS, SCHEDULE FOR LUMP SUM OR INSTALLMENT PAYMENTS, INVOICE FORMAT, ETC.]

[

March 13, 2026

Mr. Brent McQueen, P.E., CFM, CPESC
Engineering Division Manager, Engineering & Public Works
Village of Schaumburg
714 South Plum Grove Road
Schaumburg, Illinois 60193-4329

Subject: Proposal for Fiscal Year 2026-27 MWRD IICP Services – Annual Reporting, SSES, Design, Construction Management

Dear Mr. McQueen:

RJN Group, Inc. (RJN) is pleased to submit this proposal to provide Professional Engineering and Specialty Field Services to assist the Village of Schaumburg (Village) in meeting the Long-Term Program requirements of the Metropolitan Water Reclamation District of Greater Chicago (MWRD) Infiltration / Inflow Control Program (IICP).

This proposal outlines the eleventh year of work for the MWRD IICP. The following table provides a summary of the work completed in each of the previous years. Although the fiscal year 2014/15 is included in the summary, it primarily served as a planning and preparation year.

2014/15	- Flow Meter Purchase and Kickoff
2015/16	- Flow Meter Planning and Coordination - Walnut Basin Flow Monitoring - Replace Flow Meter Equipment Purchase
2016/17	- MWRD IICP Annual Reporting - Kessel/Braintree Basins Flow Monitoring - Walnut Basin SSES - GIS Collection of Rim Elevations and Locations - Walnut Lane Lift Station Study
2017/18	- MWRD IICP Annual Reporting - Walnut Lift Station Downstream Capacity Flow Monitoring - Kessel Park Basin SSSES - Walnut and Kessel Basin Rehab Design - Walnut Basin Construction Management/Observation
2018/19	- MWRD IICP Annual Reporting, Private Sector Program, and Long-Term Plan - Braintree Basin Flow Monitoring - North Braintree Basin SSES - North Braintree Basin Rehab Design - Walnut and Kessel Basins Construction Management/Observation
2019/20	- MWRD IICP Annual Reporting, Private Sector Program, and Long-Term Plan

2019/20	- Bode Rd LS and Cedarcrest Basins Flow Monitoring - Bode Rd LS Basin SSES and Survey - Bode Rd LS Basin Rehab Design - North Braintree Basin Rehab Construction Management/Observation - Walnut Basin Rehab Construction Management/Observation
2020/21	- MWRD IICP Annual Reporting - Downstream Walnut Basin Flow Monitoring - South Braintree Basin SSES - South Braintree Basin Rehab Design - Bode Rd LS Basin Rehab Construction Management/Observation
2021/22	- MWRD IICP Annual Reporting - South Braintree Basin Rehab Design - South Braintree Basin Point Repair Construction Management/Observation - East Schaumburg Flow Monitoring (Partial) - Braintree Basin Hydraulic Model - Jeffrey Ln and Illinois Ave CMP Assessment and Preliminary Design - Bode Rd Lift Station Force Main Assessment
2022/23	- MWRD IICP Annual Reporting - South Braintree Basin Rehab Design - South Braintree Basin Construction Management/Observation - ACP CCTV Assessment and Preliminary Design (over 10") - ACP (over 10") Point Repair Design - East Schaumburg Flow Monitoring Installs
2023/24	- MWRD IICP Annual Reporting - Downstream Walnut Basins 7 & 9 – MHI, Smoke Testing, and Dye Testing - ACP CCTV Assessment and Preliminary Design (10" and under) - South Braintree High Priority Lining Design - ACP (over 10") High Priority Lining Design - South Braintree Lining Construction Management/Observation - ACP Point Repair Construction Management/Observation - East Schaumburg Flow Monitoring (continued)
2024/25	- MWRD IICP Annual Reporting - Downstream Walnut Basins 7 & 9 – CCTV - ACP (10" and Under) Point Repair Design - ACP (over 10") High Priority Lining Construction Management/Observation - South Braintree High Priority Lining Construction Management/Observation
2025/26	- MWRD IICP Annual Reporting - SSES of Select Cedarcrest Area - ACP(10" and under) HP Lining, N Braintree and Bode LS Areas HP Manhole Rehab Design - ACP (10" and under) Point Repair, N Braintree and Bode LS Areas Manhole Rehab Construction Management/Observation - Flow Monitoring Post High Priority Rehab (Meter Installs)

As a reference, a map exhibit is attached in Exhibit D to show the work completed in previous years and the work proposed for the upcoming fiscal year as discussed with the Village.

The services to be provided under the MWRD IICP for Fiscal Year 2026/27 are as follows:

- MWRD IICP Annual Reporting
- SSES: High Peaking Factor areas in parts of Bode and Walnut Lane
    - Bode-04
    - WL-05
- Design: Select High Priority Defect Manhole Rehabilitation
    - Portions of Cedarcrest, Walnut, and Kessel areas
- Construction Management and Observation:
    - ACP (10" and under) High Priority Lining
- Flow Monitoring:
    - North Braintree Post High Priority Rehabilitation Benchmarking (continued)

MWRD Annual Reporting

As a reminder, MWRD reviewed the Village's Long-Term Operations and Maintenance Plan (LTOMP) and Private Sector Plan (PSP), and it was approved on March 22, 2021.

The annual paperwork for the MWRD IICP will be completed with assistance from Village staff. Now that the short-term program is complete, these services shift to the long-term program, with the seventh submittal due on March 1, 2027.

SSES For Select Bode and Walnut Lane Areas

The Village has completed SSES in all three high priority areas under the short-term program (Walnut, Kessel, and North Braintree). The MWRD's long-term requirements include continuing SSES at 2% of the system per year. This has been progressing with the SSES of the Bode Road Lift Station Areas in 2019/20, South Braintree basins in 2020/21, the Downstream Walnut Basins in 2023-2025, and Bode Basins in 2025/26. To date, the long-term requirements are being met, with the select high peaking factor meters basins next on the list for SSES. The chosen basins are BODE-04 and WL-05, which have 9.63 and 28.8 peaking factors, respectively, based on the full Village flow monitoring efforts and corresponding I/I analysis.

Per the Village GIS, basins BODE-04 and WL-05 include 26,020 linear feet of sanitary sewer and 119 sanitary manholes. The SSES work includes smoke testing, dye flooding, manhole inspection, and CCTV review with recommendations. See Exhibit A for the detailed scope of services as they relate to the SSES activities. As with previous studies, the Village will be providing the sewer televising services, SewerAI (via RJN's partnership agreement) will be utilized to PACP code the CCTV, and RJN will be responsible for QC and analysis of the footage.

Design and Bidding Engineering Services

The engineering services for 2026/27 will be manhole rehabilitation design and bidding services for previously inspected manholes. The basins for manhole rehabilitation design and bidding services include:

- Bode-00, 01, 02, and 03 (inspected in 2019)
- SCHMWL-01, 02, 03, and 04 (inspected in 2016)
- Kessel-01 (inspected in 2021)

The design associated in this proposal includes rehabilitation of High Priority defects identified from manhole inspection activities ranging back to 2016. It is imperative that these efforts are completed in order to maintain good standing with the MWRD IICP and the requirements to fix High Priority defects within 3 years. While the time constraints for rehabilitation have not been met up to this point, due to budget limitations, MWRD has been satisfied with the efforts put forth in fixing the immediate needs of the mainline sewers and laterals. The high priority manhole rehabilitation will be designed and bid in accordance with the construction budget that was approved by the Village. It is expected to include manhole lining, replacement, grading, and other rehabilitation techniques. The design and bidding will be completed near the end of fiscal year 2026/27 in order to complete construction in the 2027/28 fiscal year.

Following this design, the oldest remaining manhole inspections in need of rehabilitation will be from 2020, and the Village will be in a good position for design and construction for those identified high priority defects in subsequent years.

Construction Engineering Services

The construction services will be Construction Management and Observation of the Small ACP (10" and under) High Priority Lining, for which the design was completed in 2025/26. The scope of construction is anticipated to include services for the following work: approximately 16,130 LF of sewer cleaning, televising, and lining (6" - 10" diameter), one (1) point repair, cutting eleven (11) protruding taps, dye testing of eleven (11) existing service connections, reinstatement of two-hundred fourteen (214) laterals, grouting of one-hundred twenty-six (126) laterals, cleaning and televising of ninety (90) laterals, lining of eighty-eight laterals (88), traffic control and protection, restoration and other related and incidental work. The rehabilitation shall be performed by private contractors, chosen through bidding, while being managed and supervised by RJN construction staff.

Flow Monitoring Services

Flow Monitors were installed in 2025/26 in order to capture data from the higher precipitation season in the areas that have had all high priority defects addressed. These basins include Brain-01, 02, 03, 04, 05, and 06 (referred to as North Braintree). Four months of the monitoring period and the analysis will be part of this project. The intention of the monitoring period is to assess the progress of the I/I remediation efforts that the Village has been implementing and benchmark these new I/I levels for these basins.

Program Management & Clarity™

Overall management and planning of the sanitary program to meet MWRD requirements will also be provided. Hours for project management will be allocated in each task described hereinabove.

RJN will provide access to its online data hosting platform **Clarity™**, that includes status of data collection, access to data collected, and all field collected media.

Assuring Quality and Safety

RJN is committed to providing **quality** deliverables. The data collected as a part of this project will be critical in evaluating the Village's sanitary system. RJN's internal quality control (QC) tools within our in-house data management software, as well as our corporate training and QC processes in place will ensure that the project will provide value for the Village.

As an employee-owned firm, RJN's commitment to the **safety** of our employees, Village employees, and the public is paramount. That commitment to safety is demonstrated in our internally developed and audited safety program where our goal is to have all field staff, engineers, and project managers "RJN Safety Certified." Included in the certification is confined-space entry training, temporary traffic control, OSHA 10-hour, fall protection, and many more. Every project follows an RJN Health and Safety Plan (HASP) when completing any field work.

Price and Schedule Summary

This project will be invoiced on a Time and Material and Unit Price basis for a total not-to-exceed fee of **$406,572** (budgetary) as described in the following table and in detail in Exhibit B:

Task Description	FY2026/27 Cost
MWRD Annual Reporting	$14,000
SSES – Bode-04, WL-05	$89,353
Rehabilitation Design and Bidding – Manhole	$113,503
Construction Management – Small ACP HP Lining	$144,916
Flow Monitoring – North Braintree	$44,800
TOTAL	**$406,572**

The project is expected to be completed by April 30, 2027 based on a Notice to Proceed by May 31, 2026. Complete Scope of Services, Pricing, Schedules, and Maps are provided in the following exhibits:

- Exhibit A – Scope of Services
- Exhibit B – Pricing
- Exhibit C – Schedule
- Exhibit D – Project Maps

We are looking forward to the opportunity to continue work with the Village of Schaumburg on this important project. It is our pleasure to submit this proposal to you. Please feel free to contact Tom at 224.587.7366 if you would like to discuss this proposal or have any questions.

Sincerely,

Thomas Romza, PE
Regional Manager

Michael Young, PE
Senior Vice President

EXHIBIT A
SCOPE OF SERVICES

RJN is proposing the following scope of services to conduct the Fiscal Year 2026/27 MWRD IICP Services for the Village of Schaumburg.

A. **Project Kickoff**
   1. Conduct an in-person kickoff meeting with Village staff to discuss the project.
   2. Prepare agenda, meeting minutes, and anticipated schedule.
   3. Discuss logistics of details within each task of the project.

B. **MWRD Annual Reporting**
   1. Work with the Village to compile the annual submittal to MWRD for Article 8. RJN will complete the following forms;
      a. Long-Term Requirement Annual Summary Report;
      b. High Priority Deficiency Form;
      c. Summary of rehabilitation plan, including a Capital Improvement Program (CIP) as applicable; and
      d. Prioritization/Activity Map Update.
   2. Submit completed MWRD forms.
   3. Provide overall management of the MWRD program.

C. **Cedarcrest Area SSES of basins Bode-04 and WL-05**
   1. Smoke Testing
      a. Prepare a draft resident smoke testing notification letter for the RJN to send to the affected residents and business owners. The letters will include RJN contact information for use during the smoke testing. If desired, these letters can be formatted as a public service announcement, billing insert, and/or used as a Reverse 911 message sent by the Village. If necessary, provide bilingual letter in Spanish.
      b. Prepare smoke testing door hangers to be hung by RJN staff at each address less than one week prior to smoke testing. The door hangers will also include RJN contact information and can be bilingual if necessary.
      c. Notify the Village and the local fire and police departments of planned smoke testing activities, including daily updates.
      d. Provide equipment, personnel, and smoke as necessary for smoke testing.
      e. During smoke testing, erect smoke testing signs near the testing area and answer resident and Village questions on-site as well as through phone calls.
      f. Use handheld electronic data collection equipment for collecting smoke testing data.
      g. Smoke test the sanitary sewers as outlined, approximately **26,020** linear feet.
      h. GPS locate each identified defect and take a minimum of one digital photograph of each defect.

i. Upload and provide access to smoke testing data and photos on the web viewer Clarity®.

2. Dyed Water Flooding
   a. Provide equipment, personnel, and dye as necessary for dyed water flooding. Water to be provided by Village.
   b. Work with Village-provided televising staff or subcontractor to perform televising during dyed water flooding setups. **Subconsultant services are not included in this proposal, only coordination.**
   c. Set up and complete dyed water flooding as outlined, for up to **2 setups**. Document results with digital photographs of the dye test setup and if possible dyed water entering the sewer (where applicable).
   d. Locate each identified defect relative to segment manholes and take at least one digital photograph or video of each defect (where applicable).
   e. Upload and provide access to dyed water flooding data on the web viewer Clarity®.
3. Manhole Inspection
   a. Provide equipment and personnel as necessary for manhole inspections, up to **119** manholes.
   b. Use handheld electronic data collection equipment for collecting manhole inspection data.
   c. Complete surface manhole inspections for manholes as outlined. Collect the following attribute data, as it can be determined:
      i. Manhole diameter and material;
      ii. Connecting sewer diameters, invert measurements, and flow direction;
      iii. GPS data of the manhole x, y, and z coordinates.
   d. Identify and document manhole condition, including:
      i. Direct evidence of I/I;
      ii. Open pickholes in lid;
      iii. Cover, frame, adjusting ring, and seal condition, including needed adjustments;
      iv. Cone condition and defects;
      v. Wall condition and defects;
      vi. Trough and bench condition and defects; and
   e. Take a minimum of 3 digital photographs at each manhole structure
      i. Surrounding area;
      ii. Manhole cover; and
      iii. Topside - looking down;
   f. Take a 360-degree video at each structure using a remote camera to provide a 360-degree view of the entire structure.
   g. Upload and provide access to manhole inspection data and media on the web viewer Clarity®.
   h. Use data collected through field services to provide updates needed to the Village GIS database. Mapping updates may include:

i. Addition of structures located during field investigations;
ii. Updating of structure location;
iii. Removal of structures confirmed to not exist;
iv. Updating connectivity and flow direction.

i. Provide updates to Village GIS geodatabase in a data transfer with Village staff.
j. Coordinate with Village GIS staff for "check-in/check-out" procedures.
k. Assist the Village with incorporation of changes and information into Village GIS infrastructure and coordinate with other Village consultants on incorporation of GIS data.

4. CCTV Review
   a. Provide autocoding software and coordination for Village CCTV, up to **26,020** linear feet.
   b. Upload and provide access to CCTV data and videos on the web viewer Clarity®.
   c. Provide coordination with the Village's televising crew for areas to be televised and obtaining televising videos.
   d. Provide equipment and personnel as necessary for televising video QC.
   e. Review and QC the CCTV using PACP-certified personnel and PACP coding standards and edit as necessary.
5. Analysis and Report
   a. Provide data analysis as follows:
      i. Compile field data and develop complete list of defects.
      ii. Map results in GIS.
      iii. Assign an estimated flow to each defect; and
      iv. Determine a level of severity and/or preliminary rehabilitation method for each manhole, pipe, or identified defect;
      v. Create a summary of estimate cost.
      vi. Development of a detailed rehabilitation schedule is not included in the scope but can be added if requested by the Village.
   b. Organize data from individual field services into a comprehensive summary report.
   c. Provide the following information for the summary report:
      i. Summary of work completed;
      ii. Map(s) of inspections, defects, and SSES findings.
      iii. Summary of deficiencies observed, and preliminary recommendations developed.
      iv. List(s) and map(s) of preliminary rehabilitation recommended.
      v. Recommendations for follow-up SSES work.
   d. Provide digital copies of data, GIS geodatabases, and photographs.

D. Design and Bidding Engineering Services

1. Bode-00, 01, 02, and 03, SCHMWL-01, 02, 03, and 04, Kessel-01 High Priority Manhole Rehabilitation Design and Bidding:

a. Identify high priority manhole repairs, manholes assessed for rehabilitation from 2016, 2019, and 2021 inspections. Review recommended rehabilitation methods with Village to confirm use of the most effective approach, based on cost, location, I/I reduction, structural improvement, and Village standards.
b. Provide the following field checks:
    i. Identify surface restoration requirements (as applicable);
    ii. Identify potential traffic control needs during construction; and
    iii. QA/QC manhole recommendations
c. Prepare detailed schedules and bid tab for recommended manhole rehabilitation.
d. Prepare manhole rehabilitation exhibits to be included in the Bid Package, including the following:
    i. Manhole rehabilitation location exhibits; and
    ii. Project and Village specific Details & General Notes (if needed).
e. Prepare bid package with plans, schedules, Village front end bid documents, and detailed specifications. Prepare draft bidding documents for Village review.
f. Prepare an opinion of probable construction cost.
g. Bidding Assistance:
    i. Send advertisement to expected bidders;
    ii. Prepare Addenda;
    iii. Respond to Contractors' questions; and
    iv. Prepare letter of recommendation for award.

E. Construction Engineering Services

1. Small ACP (10" and under) Sanitary Sewer High Priority Lining Construction Management and Observation:
    a. Pre-Construction Assistance:
        i. Prepare Contract Documents for execution by Village and Contractor. Review Contractor's insurance documents.
        ii. Coordinate and attend preconstruction meeting. Prepare and distribute meeting minutes.
        iii. Review Contractor's shop drawings and other construction submittals, traffic control plans, pre-construction surface videos and construction phasing.
    b. Ensure contractor provides notification to the residents of impacts to sewer service and access to driveways.
    c. Provide a combination of full and part-time construction observation for the duration of the project. RJN proposes to be on-site full time when the point repairs are completed. Part-time observation will be provided for restoration, manhole rehab, and lining. Part-time supervision will be approximately four hours per day, when the Contractor is onsite and working. This proposal is

based on providing a total of 340 hours of full and part-time construction observation services.

d. Provide daily documentation of the construction activities when on-site, including maintaining a daily project journal, taking digital photographs of all phases of the project, and taking measurements for all quantities installed. RJN will provide access of daily reports to the Village for review via Clarity®, the RJN online platform.
e. Provide periodic inspection of traffic control measures to ensure roadways remain open and driveways/sidewalks are not blocked for extended periods. Identify potential traffic control and surface rehabilitation needs during construction, observe construction phase J.U.L.I.E. locates and identify potential utility conflicts for locations requiring excavation.
f. Alert the Contractor if equipment or materials are being installed prior to material submittal approval or if the wrong materials are being used. Provide field checks of materials and equipment, including enforcement of material testing.
g. Inspect each manhole and surrounding area during and after construction, to ensure no damage has occurred. This includes the final walk through, preparation of punch list, and final inspection.
h. Provide observation services during construction testing where applicable. Review testing documentation submittals for compliance with plans and specifications. Prepare a preliminary and final punchlist. Submit to the Village for review and incorporate Village's comments. Submit to Contractor for completion.
i. Provide personnel as necessary for pre/post rehab televising video review. Review sewer televising videos using PACP-certified personnel. Identify work completed that is in compliance with the Contract Documents and any deficiencies in the final work product.
j. Provide general project management and coordinate meetings with Village and Contractor as agreed upon at preconstruction meeting. Coordinate project with the Village, and Contractor, including updates on progress. Provide contract management, including review of Contractor's payment requests, preparation of change orders, coordination of contract closeout and preparation of a final acceptance letter.
k. Obtain as-built documents from the Contractor and prepare for the Village a set of final construction documents in original AutoCAD or GIS formats. Obtain project specific rehabilitation changes to the Village's collection system and provide to the Village for inclusion in their GIS. Prepare a GIS layer update of the rehabilitation work and rehabilitation locations.
l. Prepare and provide record drawings from the contractor's as-built plans.

F. **North Braintree Post High Priority Rehabilitation Flow Monitoring**

Six (6) Village owned flow monitors and two (2) RJN rain gauges were installed in fiscal year 2025/26. The data collection and analysis of the flow monitoring is part of this project and is outlined as follows:

1. Provide meter and rain gauge maintenance as necessary to keep equipment in proper operation for the duration of the monitoring period.
2. Perform a total of five calibration measurements during the flow monitoring period.
3. Procure spare parts and replacement equipment, such as batteries, and desiccants, as needed to keep meters and rain gauges working and within operating standards. Meter and sensor replacement is not included for Village-owned meters.
4. Perform final calibration measurements at each site and remove the flow meters and rain gauges. Clean and return Village-owner flow meter equipment.
5. Upload and provide access to flow monitoring data and photos on the web viewer Clarity®
6. Process the collected raw data. Analyze the processed data for wet- and dry-weather flow patterns. Create hydrographs for each meter and determine wet-weather peaking factors at standard storm recurrence and durations for each basin.
7. Perform an inflow and infiltration analysis, including:
    a. Inflow peaking factors
    b. Regression analysis for peaking factor prediction
    c. Scattergraphs and hydrographs
    d. Capacity analysis including downstream control and surcharging assessment
    e. Post rehabilitation I/I mitigation assessment
8. Provide the following information for the summary report:
    a. Details on each meter and rain gauge location
    b. Summary of the flow and rainfall data collected
    c. Conclusions from the flow metering, including evidence of downstream control, hydraulic bottlenecks, levels of infiltration and inflow (I/I), and a comparison to historical I/I analysis.
    d. Adequacy of the existing system to handle existing flows
    e. Recommendations for the next appropriate steps including reduction in I/I
9. Provide digital copies of data, GIS geodatabases, and photographs.

Items Requested from the Village

1. Access to structures for inspection. Assistance locating or opening seized/buried manholes as required. Assist RJN to access backyards when necessary.
2. Assistance with traffic control in high traffic areas, as necessary.
3. Sewer televising for CCTV review and during Dyed Water Flooding inspections and submittal of videos and reports
4. Water for Dyed Water Flooding inspections.
5. Upload into autocoding software "usable" CCTV of sanitary sewers.

6. Tree removals, as necessary, prior to the point repair work.
7. Help coordinating and communicating with all project stakeholders and residents.
8. Provide GIS data as necessary.
9. Review and comment on prepared bidding documents including any project specific modifications for this project.
10. Publish construction bid using the Village's standard procurement procedures.
11. Coordination with RJN in answering bid-related questions in formal addenda.

EXHIBIT B
PRICING

Pricing for the FY 2026/2027 IICP Services project is as follows.

Pricing Terms for Invoicing: Time and Materials, Unit Price

Not-To-Exceed Total Cost: $406,572

Task #	Task Description	Units	Quantity	Hours / Cost/Unit	Cost
1000	MWRD IICP Annual Reporting			85	$ 14,000.00
1001	Long-term requirements annual summary report			22	$ 3,310.00
1002	High priority deficiency form			11	$ 1,820.00
1003	CIP Planning			14	$ 2,278.00
1004	Prioritization/activity map updates			13	$ 1,861.00
1005	2025/26 program management services			25	$ 4,731.00
2000	SSES of Meter Basins Bode-04 and WL-05			543	$ 89,353.00
2001	Smoke Testing (26,020 linear feet) and Recommendations			245	$ 31,877.00
2002	Dyed Water Flooding and Recommendations (2 setups)			40	$ 5,335.00
2003	Manhole Inspection (119 manholes), Survey, and Recommendations			141	$ 18,540.00
2004	CCTV Autocode/QC and Recommendations (26,020 linear feet)			46	$ 16,583.00
2005	Final Analysis and Draft/Final Report			71	$ 11,416.00
2006	Direct Costs (Equipment, Mailings, Mileage, Etc...)			-	$ 5,602.00
3000	Rehabilitation Design - Manholes			688	$ 113,503.00
3001	Bode-00, 01, 02, 03			262	$ 42,964.00
3002	SCHWL-01, 02, 03, 04			262	$ 42,964.00
3003	Kessel-01			126	$ 20,703.00
3004	Manhole Rehab Bidding Services			38	$ 6,872.00
4000	Construction Management and Observation			801	$ 144,916.00
4001	ACP (10" and Under) HP Lining			801	$ 141,074.00
4002	Direct Costs (mileage)			-	$ 3,842.00
	TOTAL T&M			**2117**	**$ 361,772.00**
5000	Flow Monitoring	Units	Quantity	Cost/Unit	$ 44,800.00
5001	Meter/RG Cals, Maint, and Data Review (4-months)	Me-Mo	24	$ 1,050.00	$ 25,200.00
5002	Meter Removal and Return, Finalization	Meter	6	$ 1,350.00	$ 8,100.00
5003	Analysis and Reporting	LS	1	$11,500.00	$ 11,500.00
	TOTAL UNIT PRICE				**$ 44,800.00**
	TOTAL CONTRACT AMOUNT				**$ 406,572.00**

Hourly Rate Schedule

	Classification	2026 Rates*
PD	Project Director	$270.00
SPM	Senior Project Manager	$240.00
PM	Project Manager	$205.00
SCM	Sr. Construction Manager	$185.00
CM	Construction Manager	$170.00
CO	Construction Observer	$150.00
SPE	Senior Project Engineer	$175.00
PE	Project Engineer	$160.00
EI	Engineer I	$145.00
GSS	GIS Specialist	$140.00
GIS	GIS Analyst	$120.00
SDA	Senior Data Analyst	$140.00
DA	Data Analyst	$120.00
FM	Field Manager	$125.00
FS	Field Supervisor	$115.00
FT	Field Technician	$105.00
AS	Administrative Support	$115.00
	**Rates valid through 12/31/2026 and are subject to an annual increase.*	

Notes

- The Hourly Rate Schedule is valid until April 30, 2027. Following that date, rates may be subject to an annual increase.

Contract Option

This contract can be amended to include additional work upon joint approval by the Village and RJN.

EXHIBIT C
PROPOSED SCHEDULE

RJN is prepared to start work immediately upon an Agreement. The schedule for this project is summarized as follows:

Task	Timeline
MWRD Annual Reporting	Submit draft of MWRD submittal by February 17, 2027, with submittal to MWRD by **March 1, 2027** deadline.
SSES of BODE-04 and WL-05	Planning will begin upon NTP, with all SSES activities and reporting expected to be complete by **February 2027**.
Rehabilitation Design and Bidding	Design shall be completed by **March 2027 while** Bidding will start in **April of 2027**.
Construction Management and Observation	Pending plan review by the Village, construction is expected to begin in **June of 2026**.
Flow Monitoring North Braintree	Flow monitors are installed and reporting is expected by **October 2026**

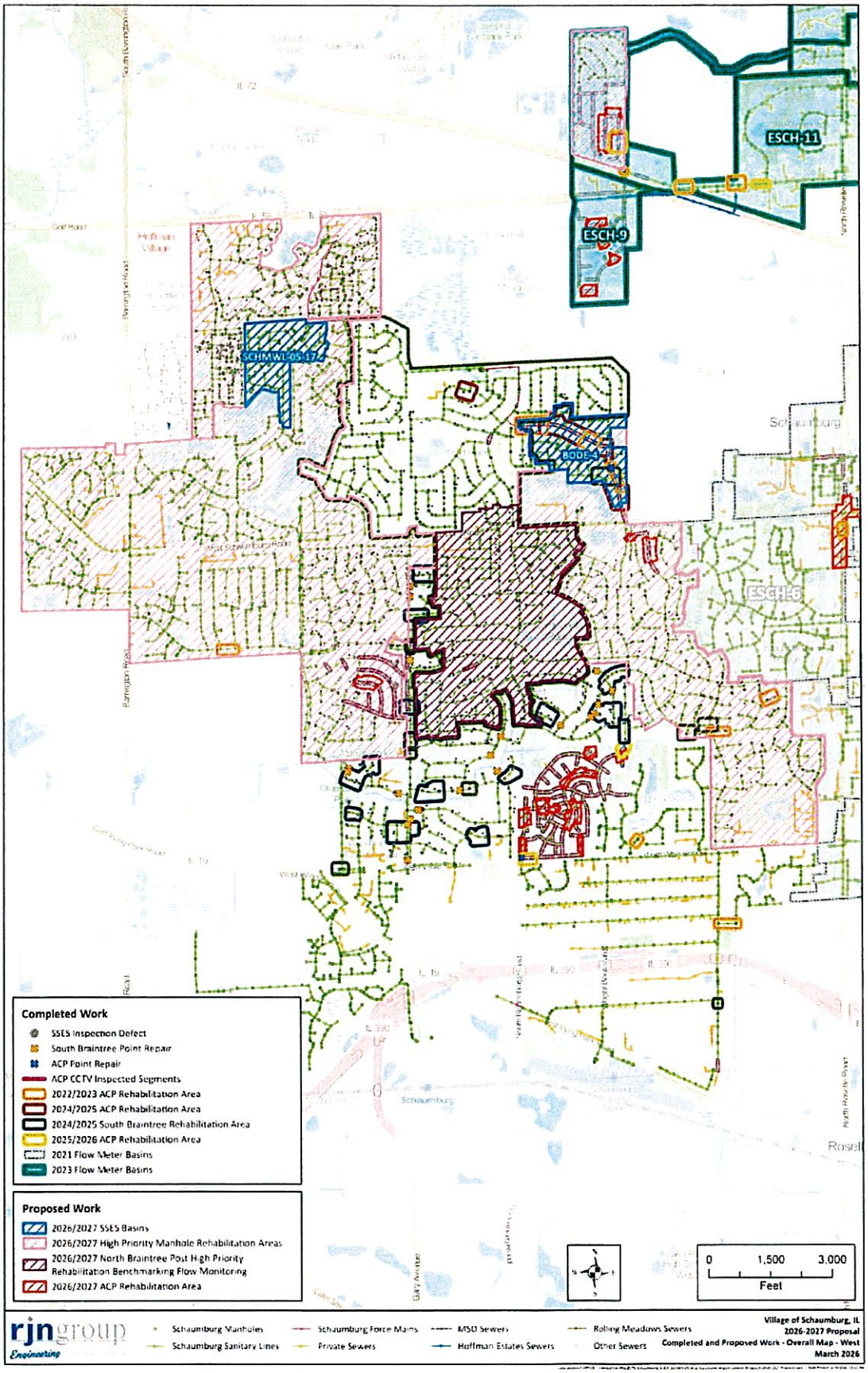
ESCH-11
ESCH-9
SCHMWL05-17A
BODE-1
ESCH-6
Completed Work
SSES Inspection Defect
South Braintree Point Repair
ACP Point Repair
ACP CCTV Inspected Segments
2022/2023 ACP Rehabilitation Area
2024/2025 ACP Rehabilitation Area
2024/2025 South Braintree Rehabilitation Area
2025/2026 ACP Rehabilitation Area
2021 Flow Meter Basins
2023 Flow Meter Basins
Proposed Work
2026/2027 SSES Basins
2026/2027 High Priority Manhole Rehabilitation Areas
2026/2027 North Braintree Post High Priority Rehabilitation Benchmarking Flow Monitoring
2026/2027 ACP Rehabilitation Area
0
1,500
3,000
Feet
rjngroup Engineering
Schaumburg Manholes
Schaumburg Sanitary Lines
Schaumburg Force Mains
Private Sewers
MSD Sewers
Hoffman Estates Sewers
Rolling Meadows Sewers
Other Sewers
Village of Schaumburg, IL
2026-2027 Proposal
Completed and Proposed Work - Overall Map - West
March 2026

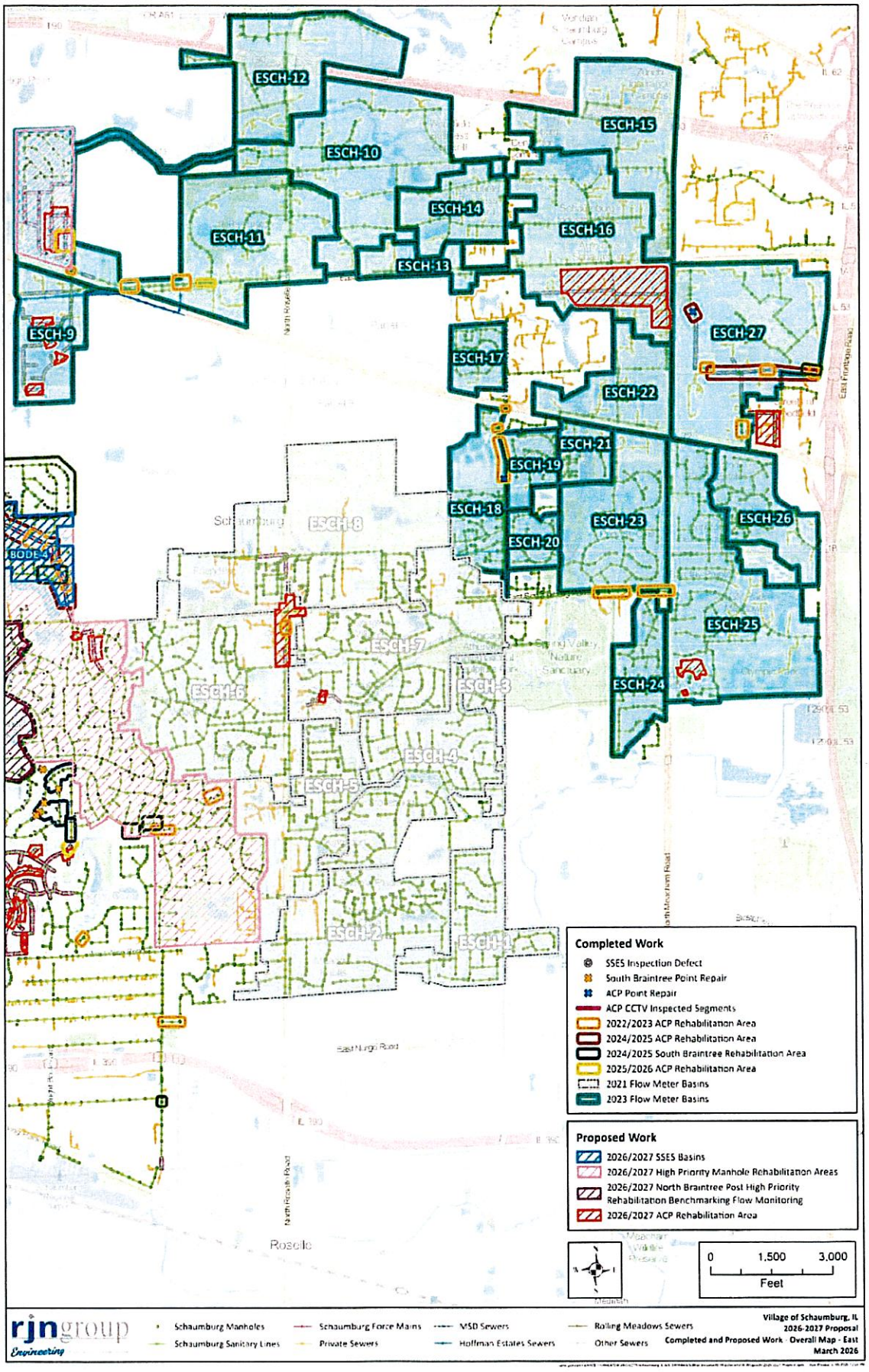
ESCH-12
ESCH-15
ESCH-10
ESCH-14
ESCH-16
ESCH-11
ESCH-13
ESCH-9
ESCH-27
ESCH-17
ESCH-22
ESCH-21
ESCH-19
ESCH-18
ESCH-23
ESCH-26
ESCH-20
ESCH-25
ESCH-24
ESCH-8
ESCH-7
ESCH-6
ESCH-3
ESCH-4
ESCH-5
ESCH-2
ESCH-1
BODE-1
Schaumburg
Roselle
East Nuge Road
North Roselle Road
North Meacham Road
East Frontage Road
Spring Valley Nature Sanctuary
Completed Work
SSES Inspection Defect
South Braintree Point Repair
ACP Point Repair
ACP CCTV Inspected Segments
2022/2023 ACP Rehabilitation Area
2024/2025 ACP Rehabilitation Area
2024/2025 South Braintree Rehabilitation Area
2025/2026 ACP Rehabilitation Area
2021 Flow Meter Basins
2023 Flow Meter Basins
Proposed Work
2026/2027 SSES Basins
2026/2027 High Priority Manhole Rehabilitation Areas
2026/2027 North Braintree Post High Priority Rehabilitation Benchmarking Flow Monitoring
2026/2027 ACP Rehabilitation Area
0
1,500
3,000
Feet
rjngroup Engineering
Schaumburg Manholes
Schaumburg Sanitary Lines
Schaumburg Force Mains
Private Sewers
MSD Sewers
Hoffman Estates Sewers
Rolling Meadows Sewers
Other Sewers
Village of Schaumburg, IL
2026-2027 Proposal
Completed and Proposed Work - Overall Map - East
March 2026

EXHIBIT2

INSURANCE COVERAGES

A. Worker's Compensation and Employer's Liability with limits not less than:

(1) Worker's Compensation: Statutory;

(2) Employer's Liability:

$500,000 injury-per occurrence

$500,000 disease-per employee

$500,000 disease-policy limit

Such insurance shall evidence that coverage applies in the State of Illinois.

B. Comprehensive Motor Vehicle Liability with a combined single limit of liability for bodily injury and property damage of not less than $1,000,000 for vehicles owned, non-owned, borrowed or rented.

All employees shall be included as insureds.

C. Comprehensive General Liability with coverage written on an "occurrence" basis and with limits no less than:

$1,000,000 Bodily Injury and Property Damage $2,000,000 Aggregate

Coverages shall include:

Broad Form Property Damage Endorsement

Broad Form Contractual Liability (must expressly cover the indemnity provisions of the Contract)

D. Umbrella Policy or Excess liability Insurance with a limit of liability of not less than $2,000,000.

The required coverages may be in any combination of primary, excess, and umbrella policies. Any excess or umbrella policy must provide excess coverage over underlying insurance, except professional liability, on a following-form basis such that when any loss covered by the primary policy exceeds the limits under the primary policy, the excess or umbrella policy becomes effective to cover such loss.

E. Professional Liability Insurance. With a limit of liability of not less than $1,000,000 per claim/$2,000,000 in the aggregate and covering Consultant against all sums that Consultant may be obligated to pay on account of any liability arising out deviation from the professional standard of care set forth in the Agreement. If the policy is a claims made policy, it shall remain in effect for 5 years after the work has been completed.

F. Village as Additional Insured. Village shall be named as an Additional Insured on all policies except for:

Worker's Compensation

Professional Liability

Each such additional Insured endorsement shall identify Village as follows: Village of Schaumburg, including its Board members and elected and appointed officials, its officers, and employees.

G. Other Parties as Additional Insureds. In addition to Village, the following parties shall be named as additional insured on the following policies:

Additional Insured	Policy or Policies
_____	_____
_____	_____

The Consultant will provide certificates of insurance evidencing the types and limits of insurance specified. The certificates of insurance will specifically address each of the requirements noted. All insurance noted is primary and in no event will be considered contributory to any insurance purchased by the Village.

The same full insurance coverage provided to the named insured, whether it is the Consultant or a sub-contractor, shall be provided to the Village without any limitations or endorsements that might limit or exclude coverage.

Any and all deductibles or other forms of retention are the responsibility of the Consultant. All deductibles or other forms of retention are subject to the approval of the Village. Consultant will disclose to the Village in writing the amounts of any deductible or self-insured retentions on the insurance required under this contract.

Consultant waives any right of subrogation it may have or later acquire against the Village.

The Consultant shall not allow any subcontractor to commence work on their subcontract until the same insurance has been obtained by the subcontractor. The Consultant and their subcontractor(s) shall maintain all insurance required for not less than one (1) year after completion of this contract except professional liability which shall be for 5 years.

VILLAGE OF
SCHAUMBURG

AGENDA ITEM SUMMARY

Resolution No. R-26-_____A Resolution Eliminating the Need for a Surety Bond Requirement for Permit Work to be Performed by the Village of Schaumburg on State Maintained Right-of-Way.
04/14/26
Village Board

Presenter: Brent R. McQueen, Engineering Division Manager
Lead Department: Engineering and Public Works

Executive Summary:

Chapter 605 of the Illinois Compiled Statutes (605 ILCS 5/4-101 et seq.) requires that any person, firm, or company wishing to perform work on state-maintained right-of-way must first obtain a written permit from the Illinois Department of Transportation (IDOT). This requirement applies to emergency work on broken water mains, sewers, or other Village owned infrastructures.

To ensure compliance with state specifications and proper restoration of the right-of-way, a surety bond must accompany each permit application. However, if the permit work is to be carried out by employees of a municipality or contractors acting on the municipality's behalf, a certified Resolution may be submitted in place of the required surety bond.

By obtaining this Resolution, Village employees can perform work on state-maintained right-of-way without undergoing a lengthy permit application process; it will also grant the same privilege to contractors hired by the Village to perform work in state-maintained right-of-way. This Resolution is intended for normal restoration of emergency work on Village infrastructure. Any new improvements to be installed within state right-of-way will still require a state permit and surety bond for the new work if performed by a hired contractor. The resolution covers a duration of two years (2026-2027) and a new Resolution will be needed for each subsequent two-year period.

Resolution No. R-23-093 pertaining to this matter expired at the end of 2025.

Recommended Action:

The Village Manager recommends the Engineering and Public Works Committee recommend the Village Board approve the Resolution to Utilize Motor Fuel Tax funds in accordance with the Illinois Department of Transportation Resolution for Maintenance of Streets and Highways by Schaumburg under the Illinois Highway Code (2026-2027).

ATTACHMENTS:

- RESOLUTION

RESOLUTION NO R-26-_____

A RESOLUTION ELIMINATING THE NEED FOR A SURETY BOND REQUIREMENT FOR PERMIT WORK TO BE PERFORMED BY THE VILLAGE OF SCHAUMBURG ON STATE MAINTAINED RIGHT-OF-WAY

WHEREAS, the Village of Schaumburg, located in the counties of Cook and DuPage, State of Illinois, desire to undertake, in the years 2026 and 2027, the location, construction, operation, and maintenance of driveways and street returns, water mains, sanitary, and storm sewers, street lights, traffic signals, sidewalks, landscaping, etc., on State highways, within said Village, which by law and/or agreement come under the jurisdiction and control of the Department of Transportation of the State of Illinois hereinafter referred to as Department; and

WHEREAS, an individual working permit must be obtained from the Department prior to any of the aforesaid installations being constructed by either the Village of Schaumburg or by a private person or firm under contract and supervision of the Village of Schaumburg.

NOW, THEREFORE, BE IT RESOLVED BY THE PRESIDENT AND BOARD OF TRUSTEES OF THE VILLAGE OF SCHAUMBURG:

SECTION ONE: That the Village of Schaumburg hereby pledges its good faith and guarantees that all work shall be performed in accordance with conditions of the permit to be granted by the Department, and to hold the State of Illinois harmless during the prosecution of such work, and assume all liability for damages to person or property due to accidents or otherwise by reason of the work which is to be performed under the provisions of said permit.

SECTION TWO: That all authorized officials of the Village of Schaumburg are hereby instructed and authorized to sign said working permit on behalf of the Village of Schaumburg.

SECTION THREE: That the Village Clerk certify a copy of this Resolution and forward it to the Illinois Department of Transportation, Region One Engineer.

SECTION FOUR: That this Resolution shall be in full force and effect after passage and approval as required by law.

AYES:

NAYS:

ABSENT:

PASSED AND APPROVED this _____ day of _____, 2026.

_____
Village President

ATTEST:

_____
Village Clerk

VILLAGE OF SCHAUMBURG

AGENDA ITEM SUMMARY

Resolution No. R-26-_____A Resolution Authorizing the Village Manager and Village Clerk to Execute an Agreement for 90 North TIF Management Services with Michael Baker International.
04/14/26
Village Board

Presenter: Brent R. McQueen, Engineering Division Manager
Lead Department: Engineering and Public Works

Account(s):	Budget:	Expense Request:
SEE ATTACHED BUDGET TABLE		

The budget status for this request is: Under Budget

Amount Under Budget: $2,428

Executive Summary:

The Metropolitan Water Reclamation District of Greater Chicago (MWRD) is responsible for the reclamation and treatment of wastewater and flood abatement within Cook County. Federal regulations related to the Clean Water Act require water authorities that collect, convey, and/or treat wastewater to develop a plan to minimize rain-derived inflow and infiltration from entering the wastewater collection system. Excess stormwater within a sanitary sewer collection system can lead to Sanitary Sewer Overflows (SSOs) and private property Basement Backups (BBs), both of which are considered unpermitted environmental releases.

In 2015, the MWRD began implementing a new program, the Infiltration/Inflow Control Program (IICP). The IICP, comprised of a short-term and long-term plan, required MWRD satellite municipalities, those within Cook County but outside of the City of Chicago, to investigate their sanitary sewer system, identify the source of I/I, and rehabilitate the defects allowing excess rainwater to enter the sanitary sewer collection system.

In April of 2024, staff released a Request for Proposals (RFP) to qualified professional engineering firms to assist the Village with the required tasks and reporting. In June of 2024, the Village Board approved an agreement with RJN Group, Inc., of Downers Grove, Illinois (RJN), to perform IICP tasks for the Village for a period of three years. The agreement is renewable in the second and third year based upon approval from both parties.

RJN has submitted a proposal to complete reporting, design, and construction administration tasks associated with the IICP program in FY 26/27. The proposed scope of work includes annual compliance reporting, assessment of the Bode and Walnut Basins, design of the Cedarcrest and Walnut & Kessel manhole rehabilitation projects, construction observation of the small Asbestos Cement Pipe lining, and post rehabilitation flow monitoring in the North Braintree Basin.

The Village's operating budget and the FY 26/27 Capital Improvement Program (CIP) include funds in the Utility Fund for the ongoing IICP program. RJN has submitted a proposal in the amount of $406,572 to complete the tasks listed above in FY 26/27. RJN's pricing for design and construction administration equates to less than 10% of the expected construction cost for each project. Based on staff's review of comparable engineering service contracts for similar services, the fee percentage is competitive and provides good value for the Village. As shown in the attached budget table, RJN's proposal is within budget.

Recommended Action:

The Village Manager recommends the Engineering and Public Works Committee recommend the Village Board authorize the Village Manager and Village Clerk to execute an agreement for the 90 North TIF Management Services with Michael Baker International of Chicago, IL, in the amount of $447,684, and approve the required Resolution.

ATTACHMENTS:
- Qualifications Table
- Proposal
- Resolution
- PSA

Qualifications Table
90 North TIF Project Management

AVERAGE RATINGS		BLA, Inc.		HLR, Inc.		Michael Baker International		Chastain & Associates, LLC		Procon Consulting	
Criteria	*Weight*	*Rating (0-100)*	*Total*	*Rating (0-100)*	*Total*	*Rating (0-100)*	*Total*	*Rating (0-100)*	*Total*	*Rating (0-100)*	*Total*
Technical Qualifications and Approach	20%	80.0	16.0	83.3	16.7	90.0	18.0	90.0	18.0	76.7	15.3
Project Team/Capabilities	30%	85.0	25.5	81.7	24.5	90.0	27.0	90.0	27.0	66.7	20.0
Municipal Experience	20%	83.3	16.7	83.3	16.7	90.0	18.0	90.0	18.0	63.3	12.7
Value	15%	83.3	12.5	83.3	12.5	88.3	13.3	85.0	12.8	60.0	9.0
Availability and Responsiveness	15%	90.0	13.5	88.3	13.3	90.0	13.5	90.0	13.5	70.0	10.5
Total		**84.2**		**83.6**		**89.8**		**89.3**		**67.5**	

PROPOSAL FOR

PROJECT MANAGEMENT FOR NORTH SCHAUMBURG TIF INFRASTRUCTURE / 2026-RFP-006

MARCH 6, 2026







Michael Baker INTERNATIONAL

SUBMITTED BY:
MICHAEL BAKER INTERNATIONAL, INC.

SUBMITTED TO:
VILLAGE OF SCHAUMBURG
ENGINEERING AND PUBLIC WORKS

Ogar Somo, P.E., CFM
Senior Civil Engineer
Village of Schaumburg
Department of Engineering and Public Works
714 S. Plum Grove Road
Schaumburg, IL 60193

Michael Baker INTERNATIONAL

RE: Project Management for North Schaumburg TIF Infrastructure (2026-RFP-006)

Dear Mr. Somo,

The North Schaumburg TIF District represents a major component of the Village of Schaumburg's (the Village) long-term economic development strategy and a central element of Schaumburg's multi-year capital planning efforts. With approximately $95.5 million in improvements anticipated over the next five years, the Village requires a project management partner who can provide the stability, structure, and experience necessary to oversee these investments and maintain momentum across an increasingly interconnected program.

The Village can maintain uninterrupted progress and protect its investments by partnering with a team that already understands the TIF program's operations, priorities, and challenges. Building on years of direct support to Schaumburg's TIF and EPW programs, Michael Baker International, Inc. (Michael Baker) offers immediate continuity with no onboarding, no loss of institutional knowledge, and no delay in execution. Our team of Illinois-licensed municipal engineering leaders, Dave Lawry, Scott Shirley, and Jeffrey Maczko, have been embedded in Schaumburg's project environment for years. With Scott transitioning to Michael Baker upon award and dedicated full-time to the TIF program, the Village receives consistent daily presence, rapid response, and seamless coordination with Village staff.

The Village can advance a complex, interdependent capital program with confidence by leveraging proven program-level management systems built for public-sector infrastructure delivery. Our national project controls, risk identification tools, and consultant management processes allow us to operate as an extension of Village staff, providing disciplined reporting, transparent budget tracking, and decision-ready information for the Engineering Division Manager and Village leadership. These systems support predictable scheduling, faster issue resolution, and proactive communication, key priorities for a program of this scale.

The Village can accelerate project delivery through immediate access to a multidisciplinary bench that strengthens in-house capacity without adding administrative burden. Our Chicago office provides roadway, drainage, construction management, traffic and signal, structural, and planning specialists who can quickly verify consultant deliverables, troubleshoot technical issues, and maintain momentum across all phases of the TIF program. This ready-to-deploy expertise allows the Village to address challenges in real time and reduces downstream risk during design, permitting, and construction.

Together, this combination of continuity, disciplined program management, and technical depth positions Michael Baker to guide the North Schaumburg TIF Infrastructure Program with stability, responsiveness, and strong alignment to Village priorities. We are committed to serving as a long-term partner dedicated to protecting the Village's investment and advancing its vision.

We appreciate your consideration and welcome the opportunity to continue supporting the Village. Should you have any questions or require additional information, please contact Dave Lawry at 847-417-4180 or david.lawry@mbakerintl.com. We acknowledge receipt of Addendum No. 1 and this proposal remains valid for 90 days from bid opening.

Sincerely,
MICHAEL BAKER INTERNATIONAL, INC.

Scott Rodseth, PE
Vice President / Office Executive
224-828-2911
scott.rodseth@mbakerintl.com

David Lawry, PE
Public Works / Municipal Technical Consultant
847-417-4180
david.lawry@mbakerintl.com

FIRM BACKGROUND

Michael Baker is a leading provider of engineering and consulting services with practices that encompass all facets of infrastructure, including design, civil engineering, planning, architecture, environmental, construction, and program management. For more than 85 years, the company has been a trusted partner to municipal governments, providing comprehensive services and solutions. The firm's more than 6,000 employees across nearly 100 locations are committed to *Making a Difference* for clients and communities through a culture of innovation, collaboration, and technological advancement.

Michael Baker's Chicago office opened in 1977 and currently has over 80 specialized staff, including municipal support engineers, technical managers, professional engineers, structural engineers, certified floodplain managers, and construction inspectors in-house. Below is a summary of our general firm background and experience.

Michael Baker
INTERNATIONAL

Chicago Office Expertise:

- Roadway Planning and Design
- Bridge Planning and Design
- Bridge Inspection and Load Rating
- Construction Services
- Traffic Engineering
- Traffic Signals
- Street Lighting
- Stormwater Planning and Design
- Permitting
- Green Infrastructure
- Wetlands
- Environmental Planning/NEPA
- Design-Build

MUNICIPAL ENGINEERING SERVICES

PROGRAM MANAGEMENT

Michael Baker delivers comprehensive program management services that help municipalities plan, coordinate, and implement complex, multi-year capital programs with clarity, discipline, and predictability. Our team integrates directly with local agencies to provide owner's-representative leadership, aligning scopes, schedules, budgets, and stakeholder expectations across dozens of interdependent projects.

We bring structured program controls, clear communication pathways, and transparent reporting practices that enable public agencies to make informed decisions quickly and confidently. From establishing program frameworks and developing procurement strategies to orchestrating consultant teams, maintaining interdepartmental alignment, and tracking progress in real time, our approach ensures that each project within the program advances in a coordinated, efficient, and fiscally responsible manner.

Our management services emphasize continuity, accountability, and risk-informed execution. We embed disciplined processes, such as integrated master scheduling, portfolio-level budget management, quality review procedures, action-item tracking, and structured issue escalation, to identify challenges early and maintain momentum across all phases of work. These capabilities are strengthened by our multidisciplinary in-house bench of engineers, planners, construction specialists, and technical reviewers who support rapid problem-solving without the delays of additional procurements.

Whether coordinating design and construction efforts, overseeing land acquisition dependencies, managing developer interfaces, or delivering complete, audit-ready documentation, Michael Baker provides the steady leadership and technical rigor required to help communities deliver high-impact capital programs on schedule, within budget, and aligned with long-term strategic goals.

TRANSPORTATION

Michael Baker works closely with local municipalities and state agencies in Illinois to enhance and maintain roadways, ensuring they serve all modes of transportation efficiently and safely. Our services encompass comprehensive highway planning, design, and construction, covering every phase from conceptual and preliminary engineering studies to final design and implementation. Our highway design projects are diverse and tailored to meet the unique needs of each community.

We specialize in developing new roadway corridors to improve connectivity and reduce congestion, offering integrated design and construction services for streamlined project delivery, and collaborating with private entities to fund and execute large-scale infrastructure projects. We also design intricate urban interchanges to enhance traffic flow and safety, address the specific needs of both rural and urban environments to ensure safe and efficient travel, and enhance intersections to reduce accidents and improve traffic movement.

Additionally, we promote alternative transportation modes by designing safe and accessible bike paths and pedestrian crossings, and create aesthetically pleasing and functional streetscapes that enhance the urban environment.

VILLAGE OF SCHAUMBURG
WALNUT LANE STP RESURFACING IMPROVEMENTS AND MULTI-USE PATH, PHASE I/PHASE II



STORM WATER/PERMITTING

As our population and metropolitan areas grow, the efficient storage and conveyance of clean, secure water, and the transport and disposal of residual wastes are vital to our well-being

Major rain events and natural disasters, such as hurricanes and floods, tax our nation's storm water and wastewater infrastructure. We understand the critical importance of our aging infrastructure, and we make it a priority to assist clients in continually improving these systems for future generations.

Our water professionals provide innovative consulting, planning, and engineering solutions for the entire spectrum of the water cycle. Protection and management of water resources starts at the watershed level and follows the movement of water through urban and agricultural areas, streams, lakes and reservoirs, water distribution systems, wastewater collection systems, and water/wastewater treatment plants. Our storm water team is experienced in storm water modeling, planning, designing, detention basins, culverts, flood control/ management, and watershed planning.

CONSTRUCTION ENGINEERING

Michael Baker provides innovative and cost-effective solutions to meet every modern construction project need. By partnering with our clients through all phases of construction, beginning with pre-design all the way through closeout, we are able to meet aggressive schedules safely and on budget. We provide qualified construction managers, inspectors, constructibility reviewers, schedulers, and estimators dedicated to adding value and driving efficiency for projects of all sizes.

As technologies evolve, we deliver creative ideas and advanced techniques to maintain and deliver even the most complex construction projects. We utilize e-Construction to provide electronic construction administration, management, and collaboration software and devices to strengthen workflow, increase transparency, improve safety, enhance quality, and save time and money.

We also use 4D Building Information Modeling (BIM) to maintain construction schedules and minimize conflicts and delays, which assists in the management and administration of complex construction projects.

Finally, we utilize sUAS drones to monitor construction progress and perform regular flights of project sites.

Elk Grove Village

Wellington Ave. and Leicester Rd. Over Lake Cosman Culvert Replacements



TRAFFIC ENGINEERING/SIGNALS

In today's world of rapidly growing travel demand and tighter social and financial constraints on new highway construction, traffic engineering is increasingly critical to the success of our transportation systems. We know that society can no longer simply build its way out of traffic congestion, and that creative traffic engineering is the key to operating existing highways more efficiently. At Michael Baker, we take traffic engineering seriously because we are keenly aware of the tremendous impact traffic has on our daily lives.

Traffic Analysis

Michael Baker has completed traffic studies and systems analysis to improve mobility for all users from small, suburban communities to large urban settings. Our team leverages VISSIM, CORSIM and SYNCHRO modeling to support these analysis. We've utilized modeling and 3D schematic design, to create visualizations/renderings to feature in the public and stakeholder involvements. Our traffic analysis can also include predictive safety analysis related to accident reduction and safety improvements.

Traffic Signals and Design

Michael Baker has provided engineering and design services for Traffic Signal Modernization projects with coordinated signal timing, PS&E design and system integration services for upgrades to city signals. Our team is dedicated to safety for all modal users by applying proven solutions including curb extensions, countdown pedestrian signals, reflectorized backplates, and APS push buttons.

STRUCTURAL PLANNING & DESIGN

Michael Baker addresses bridge design, construction, and preservation challenges with innovative and sustainable solutions. Leveraging our depth and versatility, we have partnered with clients on a full spectrum of bridge types – from conventional-grade separations to major, complex river crossings including trusses, arches, box girders, and cable-stayed bridges. Our expertise also extends to the design of culverts and pedestrian bridges, ensuring safe and efficient crossings for both vehicles and pedestrians.

Michael Baker as a firm consistently ranks as an ENR Top 5 Bridge Design firm and remains at the forefront of bridge innovation, demonstrating continued leadership by applying the latest advancements in bridge design, construction, and inspection to our projects. Our bridge teams collaborate nationwide to design and build innovative structures that serve as the backbone of our nation's infrastructure for the millions of people who safely travel across them each day.

IDOT

Cedar Street Extension Phases I & II Engineering Services

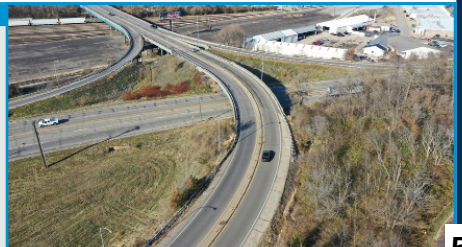

UNDERSTANDING OF THE SCOPE OF SERVICES

Schaumburg's North TIF is not a collection of stand-alone projects; it is a single, interdependent program whose success depends on disciplined coordination across transportation, utilities, parks, land acquisition, private development, and procurement timelines. The Village reinforces this by asking the TIF Project Manager to act as the Village's owner's representative for all aspects of the program, managing Village-hired consultants, integrating schedules and budgets, and reporting directly to the Engineering Division Manager over a multi-year term with an on site presence at EPW.

We understand that the Village's most immediate need is continuity and stability in program stewardship. As multiple North TIF projects advance in parallel, personalized attention and historical knowledge of the Village are necessary for program success. The emphasis on a single, accountable TIF Project Manager, available as needed, with a dedicated work area and a defined weekly cap, signals the Village's intent to restore predictability, visibility, and ownership across the portfolio without adding management workload to already engaged Village staff.

The program's near-term work plan illustrates how tightly these projects are linked. 90 North Park continues with Stage II construction support and Stage III design, high-visibility work that must be sequenced around the broader 90 North streets and development frontages to preserve access, coordinate public space features, and manage construction communications. At the same time, the 90 North Pedestrian Bridge is progressing from concept toward engineering with targeted federal funding (CMAQ) and required land acquisition, timelines that must be reconciled with development pacing on both sides of Meacham Road and with corridor streetscape decisions, so the bridge integrates cleanly into future site plans.



Conceptual rendering of the Meacham Road Pedestrian Bridge, a key 90 North TIF project providing a safe and seamless connection across Meacham Road.

On the roadway side, the Hammond Drive & Algonquin Road intersection requires ROW/easements, federal compliance, and staging that affects adjacent lighting and access; schedule shifts here can ripple into pedestrian accommodations and signal work if not managed proactively.

The North Meacham Road Corridor Stage II streetscape must be phased to maintain multimodal access while coordinating with development frontages, another place where developer schedules and municipal priorities must be synchronized to avoid rework. The Thoreau Drive Realignment is a program linchpin: straightening geometry, signals, utilities, drainage, and bicycle/pedestrian facilities to unlock development parcels and ensure operations at the Convention Center remain functional during construction. Decisions taken here directly affect staging windows and the order in which other projects proceed. It is understood certain development phases may allow aspects of the realignment efforts to be completed in concert with adjacent development activity by the developer, reducing the project management effort but

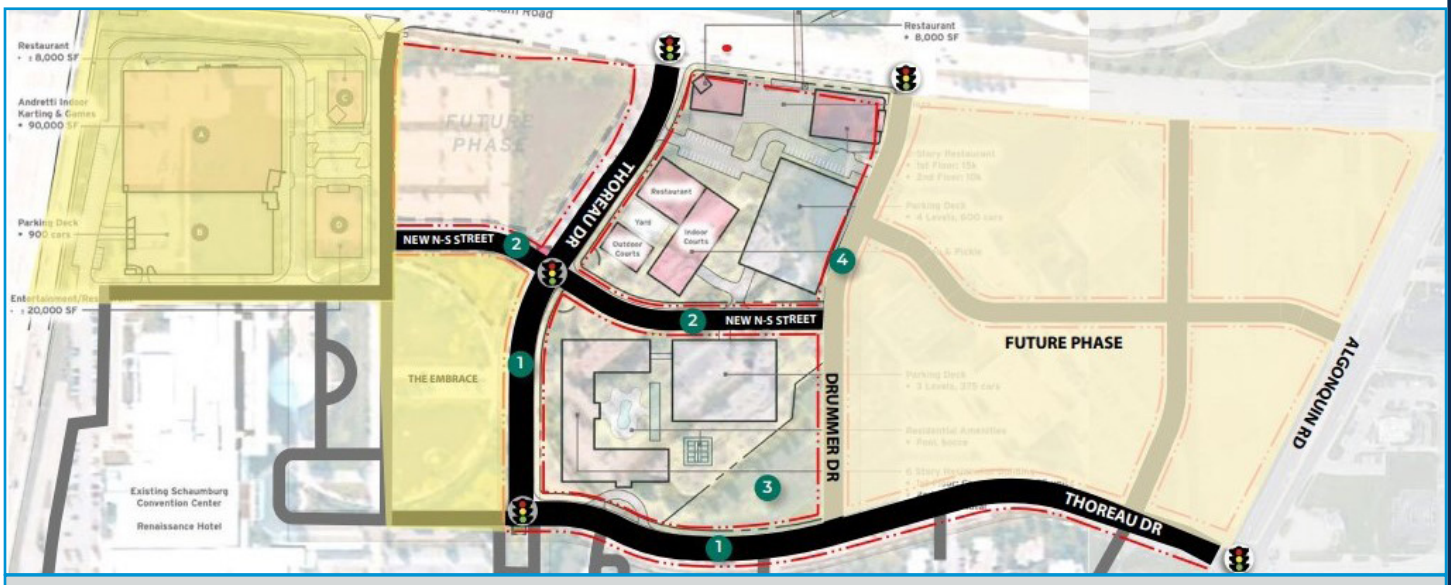

Conceptual layout of the proposed Thoreau Drive realignment within the North Schaumburg TIF District.

requiring greater coordination by the Program Manager of more possible developer-driven projects.

Underground systems create a second layer of interdependence. The Walden Subdivision Water and Sanitary Sewer improvements convert private systems to public and pair rehabilitation with new construction, easements, and coordination with roadway work. Sequencing must minimize service interruptions, match the realignment and streetscape staging, and anticipate development tie-ins so that pavement is opened only once and long-lead materials are procured on a schedule that protects TIF cash flow.

The Village has also defined a management standard for the TIF Project Manager that clarifies how performance will be measured. The role is expected to manage the TIF CIP budget and deliver a monthly budget status report; to issue a CIP Monthly Project Status Update using the Village's dashboard; to run monthly progress meetings with formal minutes and an Outstanding Action Item Log; to qualify and coordinate additional professional services through the Village's procurement process; to oversee design and construction phase responsibilities including preconstruction meetings and public-facing communications; to manage land acquisition activities; to review bids, changes, and pay applications; and to lead Lessons Learned at closeout–all while remaining independent from pursuing work on projects inside the TIF during the engagement. These requirements codify the Village's expectations for transparency, consistency, and compliance across the entire portfolio.

We recognize the pain points the Village wants solved:

- The burden of coordinating multiple consultants whose deliverables depend on one another
- The need to align Engineering and Public Works, Transportation, Community Development, Economic Development, Finance, and the Village Manager's Office around a single, shared schedule and budget
- The reality that internal staff capacity is focused on the broader CIP and cannot absorb a growing TIF portfolio without a dedicated, highly responsive program manager who reduces the Village's workload, not adds to it

In short, our understanding is that Schaumburg is seeking continuity of people and process, program-level integration across interdependent projects, disciplined budget and schedule controls, and a reliable communication engine that keeps decisions moving. The North TIF's success hinges on early identification of cross-project risks (ROW, utilities, federal coordination, development interfaces), integration of the CIP dashboard with a live dependency map, and a cadence that turns complex moving parts into clear, decision-ready information for leadership. That is precisely the role the Village has defined for the TIF Project Manager, and the role we are prepared to fulfill from day one.

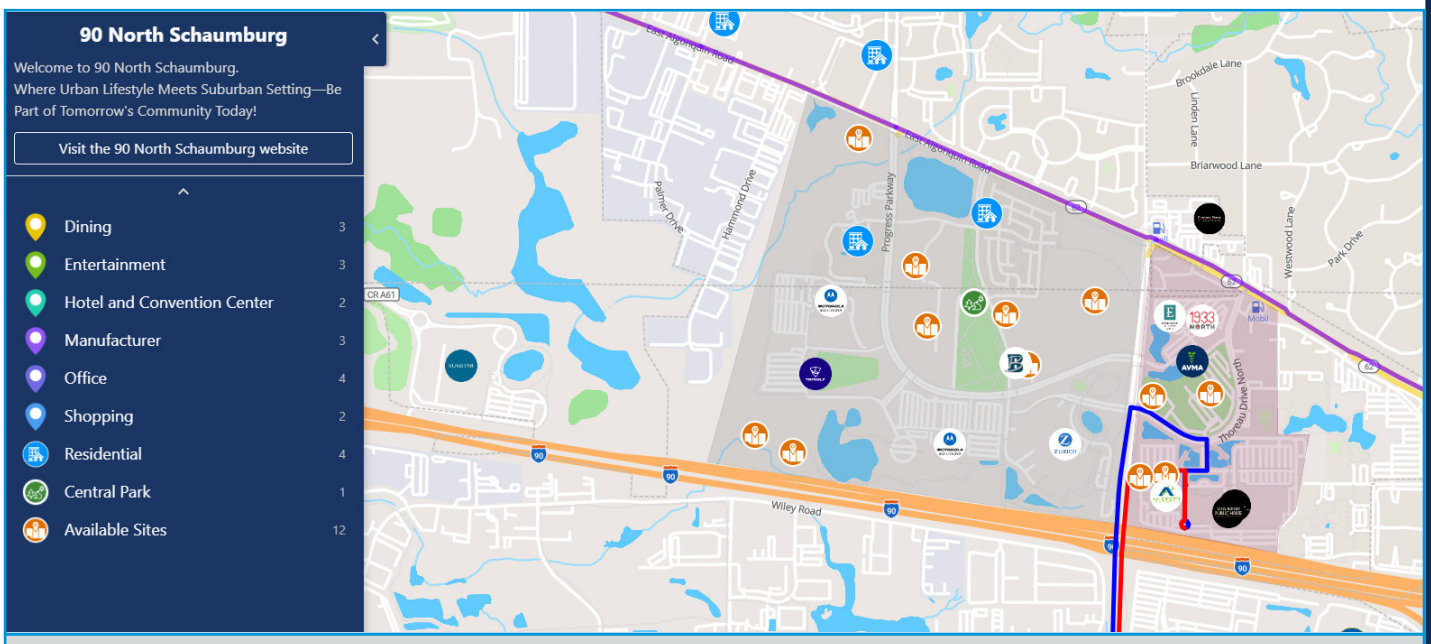

90 North TIF District Map with key features identified.

PROJECT APPROACH

The North Schaumburg TIF District is entering a pivotal phase of coordinated capital delivery and private development. To sustain momentum and protect the Village's investment, Schaumburg needs a program manager who provides stability, continuity, and disciplined oversight, someone who integrates interdependent projects, aligns consultants, and delivers clear, decision ready information to leadership. **Michael Baker offers exactly that: a management focused team that already understands the Village's systems, priorities, and stakeholders, now formalized under a structured program approach tailored to Schaumburg's needs**. The following project approach describes how we will deliver program level leadership, transparent controls, and seamless coordination across the entire TIF portfolio while operating as an extension of Village staff.

FIRM DESCRIPTION AND MUNICIPAL PROGRAM EMPHASIS

Michael Baker is a municipal focused program and project management partner. Our Chicago team manages multi-year local agency capital programs and complex, development adjacent infrastructure, emphasizing owner's representative services, consultant orchestration, and transparent reporting tailored for municipal decision making. For Schaumburg, we will lead the North TIF as an integrated program, coordinating Village needs and development projects while managing Village hired consultants and reporting directly to the Engineering Division Manager.

DEDICATED TEAM AND TRUE CONTINUITY OF SERVICE

Continuity in the Project Manager role is the Village's highest priority, and our staffing model delivers it. Dave Lawry will serve as Program Manager, offering senior oversight, executive liaison support, and risk escalation. Upon award, Scott Shirley will serve full-time as the Village's TIF Project Manager, providing daily leadership, coordination, and rapid responsiveness. Jeffrey Maczko will provide surge project management capacity when workload increases or when added municipal interface is needed. This preserves institutional knowledge and eliminates learning curves, while adding the depth, stability, and multidisciplinary support of Michael Baker's Chicago office. We will maintain an onsite presence within EPW, be available as needed, and manage hours consistent with the Village's expectations for the role, including the onsite work area and the 40-hour weekly upper limit without the Engineering Division Manager's consent.

Additionally, Dave has maintained relationships with three past TIF PMs including Joe Evers, Scott Kasper and Fred Mullard. While not members of the team, each has committed to respond to periodic questions for added continuity and to ensure final project closeouts.

MANAGEMENT PHILOSOPHY: OPERATING AS AN EXTENSION OF STAFF

Village staff are delivering a broad CIP; our responsibility is to reduce their coordination burden. We will function as the Village's owner's representative, integrating schedules, budgets, risks, and interdependencies across all TIF projects and private developments. Our cadence includes weekly working sessions to drive tasks, budgets, and schedule commitments; monthly executive reviews to confirm priorities and surface risks; and standing coordination with design teams, construction managers, developers, utilities, and permitting agencies. Communications will follow a defined workflow so decisions are made once, clearly documented, and tracked to completion.

COMMUNICATION WORKFLOW

All communications center on a single point of accountability, the TIF Project Manager, who routes information among Village leadership, EPW/Engineering, other departments, consultants, and developers. Inputs (field issues, submittals, schedule updates, budget changes) flow to the PM, are assessed for scope/schedule/cost impacts, and are summarized into decision-ready options for the Engineering Division Manager. Outputs (decisions, directives, action items) are logged, assigned, and time-boxed, with status reported at weekly work sessions and monthly executive reviews. Meeting minutes and an Outstanding Action Item Log will be issued after progress meetings to maintain a single source of truth.

PROGRAM CONTROLS, REPORTING, AND TRANSPARENCY

From mobilization, we will implement a scheduling matrix that maps interdependencies across the portfolio and reports out information to the Village's CIP dashboard and CIP Monthly Project Status Update format. This framework surfaces scope changes, schedule pressures, and cost trends early, and it standardizes reporting so leadership receives consistent, comparable information each month. We will manage the TIF CIP budget, including construction, professional services, and other expenses, and submit a monthly budget status report. Required meeting documentation (agenda, minutes, action logs) will be issued after each progress meeting to sustain predictability and accountability across teams.

QUALITY MANAGEMENT FOR SUBCONSULTANTS AND ENGINEERS

Michael Baker will prepare scopes and procurement documents, conduct technical evaluations, and provide award recommendations. Throughout this effort, **Michael Baker will apply a defined quality management (QM) process to all Village-hired consultants:**

- **Plan:** Confirm scope, deliverable standards, and review milestones at kickoff
- **Review:** Perform structured reviews for completeness,

code/standard conformance, and coordination with adjacent work
- **Resolve:** Issue consolidated comments, track reconciliation, and verify corrections at the next submittal
- **Validate:** Check readiness for procurement or construction and alignment with TIF budget and schedule.

This QM loop is embedded in our meeting cadence and deliverable tracker and is reinforced during preconstruction meetings and construction phase oversight. We will oversee design phase and construction phase PM responsibilities, including preconstruction meetings, public facing communications requirements, construction coordination, and documentation quality control.

BUDGET AND SCHEDULE ISSUE MANAGEMENT (EARLY WARNING → MITIGATION → DECISION)

Our Project Managers and Program Manager will review and validate cost estimates for future project budget requests and fiscal planning. **When a variance is detected, we will:**

- **Flag Early:** Record the issue in the risk register with quantified cost/schedule exposure
- **Stabilize:** Direct immediate containment steps (scope clarification, design adjustment, staging change, utility coordination)
- **Develop Options:** Provide the Engineering Division Manager with two to three decision alternatives including budget and schedule impacts
- **Decide and Communicate:** Document the selected path, update the matrix, and push directives through the action log
- **Monitor:** Track residual risk until closed

This is the same discipline we will use for change management (review, written recommendation, and, if directed, negotiation of change orders for Village approval) and payment reviews, both progress and final. We will coordinate final inspections for substantial completion and lead lessons learned meetings with documented summaries.

STAKEHOLDER ENGAGEMENT AND PUBLIC INTERFACE

Public meetings are typically led by Village staff; however, developer and inter-agency coordination often requires focused facilitation. We will plan and run stakeholder sessions with developers, utilities, and permitting agencies, ensuring agendas are outcome-oriented and decisions are recorded in the action log. We will also integrate private development timelines into the program matrix, so frontage expectations, access, and streetscape obligations align with Village priorities and construction windows.

MANAGING CROSS PROJECT INTERDEPENDENCIES

The North TIF is an ecosystem of linked efforts, pedestrian, roadway, utilities, park, and development interfaces. We will explicitly map and manage those linkages: e.g., land acquisition and grant programming for the 90 North Pedestrian Bridge; ROW/easement, federal compliance reviews, and staging for Hammond and Algonquin; multimodal access continuity for North Meacham Corridor – Stage II; utility relocations, signalization, drainage, and operations for the Thoreau Drive Realignment; and sequencing of Walden Subdivision Water and Sanitary improvements with roadway work to avoid rework and service interruptions. The matrix will make these dependencies visible, so risks are resolved before they affect cost or schedule.

AVAILABILITY, PROXIMITY, AND RESPONSIVENESS

Key team members live adjacent to Schaumburg and can be onsite at short notice for unscheduled meetings, developer issues, utility conflicts, or field conditions. We will use the onsite EPW work area, align availability with the Village's "as needed" expectation, and scale hours during high activity periods only with the Engineering Division Manager's consent. This model mirrors the responsiveness of internal staff and sustains the personalized attention the Village expects.

IN-HOUSE TECHNICAL BENCH–ANCILLARY, ON-CALL SUPPORT

Technical specialties are ancillary and engaged only as needed to keep projects moving. When design or construction questions arise, our Chicago-based specialists, roadway design, construction management, drainage and stormwater design, traffic and traffic signal design, street lighting, structural review, and certified planning, are available for rapid consultation. This allows the TIF Project Manager to validate consultant submittals quickly and maintain schedule momentum without separate procurements or delays.

COMPLIANCE AND INDEPENDENCE

To preserve independence and avoid conflicts, the TIF Project Manager engaged by the Village will not submit a proposal or enter into an agreement for services on any project located within the TIF District during the engagement. We will fully comply while coordinating, overseeing, and holding Village-hired consultants accountable to scope, schedule, budget, and quality requirements.

MOBILIZATION AND SEAMLESS TRANSITION

Because the Village is retaining the same trusted leaders it knows today, mobilization is swift: within days, we will confirm protocols, finalize onsite logistics, assimilate current files/budgets/schedules, and publish an initial integrated schedule with near-term milestones and critical path items. There is no onboarding delay, no relearning of history, and no disruption to active work, only an immediate extension of staff supported by disciplined program controls.

VALUE TO THE VILLAGE

This approach restores the continuity, structure, and high touch attention that the Village values most, while providing the transparency and accountability expected of a best practice municipal program. The result is fewer surprises, faster decisions, and a predictable cadence that keeps the North Schaumburg TIF program aligned with your objectives throughout the engagement.

STATEMENT OF AVAILABILITY

CAPACITY AND CAPABILITY TO PERFORM THE OUTLINED SCOPE IN A TIMELY MANNER

Michael Baker affirms that our proposed team has the time, capacity, and resources required to fully support the Village of Schaumburg throughout this engagement. **Upon award, Scott Shirley will join Michael Baker full-time and will serve as the Village's dedicated, on-site TIF Project Manager, with no competing assignments.** This will allow consistent daily presence, immediate responsiveness, and a project manager whose full professional focus is the North Schaumburg TIF program.

To provide structured leadership and continuity, Dave Lawry will serve as Program Manager, assumed at approximately 25% of his time (10 hours per week). Dave will oversee program controls, risk identification, cross-department coordination, and executive-level guidance. This planned allocation ensures the Village receives consistent senior direction while maintaining flexibility to increase involvement during periods of heightened activity. **Dave is available up to 100% of his time to devote to the Village if desired as he also has no other competing assignments.**

Jeffrey Maczko will supplement Scott's efforts as schedules demand or project needs expand, providing the Village with dependable surge capacity during overlapping construction, consultant procurement cycles, or accelerated development coordination. All three individuals reside adjacent to Schaumburg and can be on site within minutes, meeting the Village's requirements for short-notice availability and rapid response.

Beyond these core staff, Michael Baker's Chicago-based multidisciplinary bench remains available on an as-needed basis to support schedule-critical technical issues. These resources allow us to validate consultant deliverables quickly and resolve technical questions without delay or new procurement. Our internal workload planning has already reserved the necessary capacity to support this engagement, ensuring the Village receives dependable and uninterrupted coverage from award through completion.



90 North District east and west concept renderings.

PROJECT REFERENCES

The Village can have full confidence in our ability to manage and deliver the North Schaumburg TIF Program, supported by project experience that stands unrivaled in scope and relevance. Our team has repeatedly delivered complex municipal, transportation, and infrastructure programs for communities across the region, demonstrating the same qualities Schaumburg identifies as essential: strong program leadership, schedule discipline, budget stewardship, responsiveness, and seamless coordination across departments and agencies.

Our references highlight more than technical expertise; they illustrate a proven record of solving the exact challenges the Village faces today. From multi-year capital improvement programs to high-impact roadway and utility upgrades, our work has consistently shown that we understand how municipalities operate. Each project demonstrates how we have delivered measurable improvements, strengthened community infrastructure, and supported municipal staff as a true extension of their team.

PROJECT NAME/ CLIENT	**Engineering & Public Works Support Services** Village of Schaumburg, Illinois
SCOPE OF WORK	Providing the Village of Schaumburg with comprehensive supplemental engineering and project management support to stabilize operations and maintain continuity across the EPW, Community Development, and Transportation Departments since 2021. Responsibilities include managing capital improvement projects, providing utility permit review, supporting construction oversight, and delivering technical expertise needed to sustain a growing and increasingly complex Capital Improvement Program. As part of this engagement, staff serve in key operational roles, including interim leadership within the Engineering Division, ensuring uninterrupted oversight of design, permitting, and project delivery functions. Staff has managed a wide range of Village infrastructure initiatives, such as roadway resurfacing programs, storm sewer and drainage upgrades, sanitary sewer basin rehabilitation under MWRD mandates, and multi use path and bicycle facility improvements–helping the Village advance high priority CIP projects.
PROJECT TEAM	Dave Lawry, PE / Scott Shirley, PE
PROJECT REFERENCE CONTACT INFORMATION	Brent McQueen, Engineering Manager 847-923-6628; bmcqueen@schaumburg.com

PROJECT NAME/ CLIENT	**90 North TIF District Support Services** Village of Schaumburg, Illinois
SCOPE OF WORK	Since 2019, providing comprehensive project and program management services for the Village of Schaumburg's 90 North TIF District, one of the Village's largest and most active redevelopment areas. The role includes overseeing the implementation of the TIF Capital Improvement Plan (CIP) and supporting the planning and programming of future infrastructure projects. Responsibilities include managing day-to-day project delivery, coordinating with Village leadership, staff, regulatory agencies, and private developers, and representing the Village's interests across all TIF initiatives. The work also supports strategic redevelopment goals, promotes inter-agency coordination, and ensures projects align with the Village's long-term vision for 90 North. Additional duties include construction oversight and field inspection for major capital projects such as the Meacham/Algonquin Road intersection improvements, 90 North Park (Phases 1–3), irrigation systems, the Shared Street Project, Thoreau Drive realignment, Meacham Road streetscape improvements, and the Walden Subdivision water and sanitary study. This work supports contractor coordination, project documentation, and quality assurance. The scope also includes utility coordination and development review, ensuring private development within the TIF complies with Village standards. This flexible, scalable service model provides the Village with consistent technical leadership and continuity throughout the TIF's redevelopment lifecycle.
PROJECT TEAM	Dave Lawry, PE / Scott Shirley, PE
PROJECT REFERENCE CONTACT INFORMATION	Brent McQueen, Engineering Manager 847-923-6628; bmcqueen@schaumburg.com

PROJECT NAME/ CLIENT	**Walnut Lane STP Resurfacing Improvements and Multi-Use Path, Phase I/ II** Village of Schaumburg, Illinois
SCOPE OF WORK	This project includes a concurrent Phase I and Phase II engineering designs for the resurfacing of Walnut Lane from Schaumburg Road to Bode Road in the Village of Schaumburg. Improvements included resurfacing, pavement patching, the addition of an off-road concrete multi-use path, ADA improvements, signage, and pavement striping improvements in a residential corridor. Michael Baker is conducting topographic survey, geotechnical investigation, preliminary site assessment, wetland assessments, utility coordination, traffic analysis, crash analysis, public information meetings, and completion of a Project Development Report to obtain Phase I approval from IDOT District 1. Phase II engineering includes preparation of geometric plans, project specifications, construction estimates, and coordination with outside agencies including IDOT District 1 BLRS, Cook County, and utility companies. Funding for the design engineering of this project is with local Village funds.
PROJECT TEAM	Scott Rodseth, PE / Jeffrey Maczko, PE / Adam Woods, PE / Joseph Hunn, PE
PROJECT REFERENCE CONTACT INFORMATION	Brent McQueen, Engineering Manager 847-923-6628; bmcqueen@schaumburg.com

PROJECT NAME/ CLIENT	**2018-2025 Annual Street Program** Village of Schaumburg, Illinois
SCOPE OF WORK	Provided Phase II design and Phase III construction engineering services for the Village's annual Street program since 2018. The program provides capital improvements and preventative maintenance to 210 miles of industrial and residential streets, parking lots, airport pavements, bike paths, and enhanced pedestrian crosswalks. In addition to the street improvements, the program has included over 20,000 feet of water main and storm sewer improvements, requiring coordination between separate water main and pavement contractors. Scope includes construction layout, observation, documentation, and closeout for all improvements, as well as planning, survey, design, and bid document preparation for the following year. Our designs utilize various pavement rehabilitation treatments, including preventative rejuvenators, traditional mill and overlay, structural overlays, and modified and full reconstructions of the roadways. The scope also includes robust community outreach management, including residential mailings and daily responses to Customer Service Requests. During 2022, the project completed 5.46 miles of street improvements, 23.7 miles of preventative surface treatments, and 9,674 feet of water main replacement. The original construction contract value was $8,734,124. The final construction cost was $7,977,093, 9% less than the awarded contract price. The Annual Street Program is funded locally.
PROJECT TEAM	Dave Lawry, PE
PROJECT REFERENCE CONTACT INFORMATION	Brent McQueen, Engineering Manager 847-923-6628; bmcqueen@schaumburg.com

PROJECT NAME/ CLIENT	**Mohawk Terrace Subdivision Redevelopment** Village of Bensenville Public Works
SCOPE OF WORK	In addition to overseeing the Village of Bensenville's Annual Capital Improvement Program prior to joining Michael Baker, Jeffrey was responsible for Private Development engineering review and stormwater certification for the Village. One of the major redefining projects for the Village included a 60+ acre redevelopment which razed nearly 100 homes to build four large buildings totaling 1.2 million square feet. Unique aspects included vacating Village rights-of-way and easements, evaluating the Village water system to provide domestic water supply, 13+ acre feet of stormwater storage in underground detention vaults, relocations of Village utilities, and coordination with IDOT and Cook County for highway permits. Additionally, Jeff oversaw erosion and sediment control inspections, provided help with IEPA water and sanitary permits, and took part in weekly progress meetings to maintain project schedule with the developers, their engineers, and the various contractors. This development was funded entirely by the Developer at a construction cost of over $18M, not including the buildings themselves.
PROJECT TEAM	Jeffrey Maczko, PE
PROJECT REFERENCE CONTACT INFORMATION	Mr. Kurtis Pozsgay, AICP, Director of Community & Economic Development 630-350-3396; kpozsgay@bensenville.il.us

PROJECT COSTS

The following Cost Proposal outlines our recommended staffing structure, proposed hourly rates, and optional support staff classifications to successfully manage and advance the North Schaumburg TIF Program. Our approach is tailored to provide the Village with flexible, scalable, and cost-efficient support that aligns with the scope of services and the anticipated project needs. While this proposal is intended to focus on costs associated with the listed projects, Program Manager efforts and cost may span all projects currently underway and included in the 5-year CIP, and past projects still requiring closeout efforts including the Meacham/Algonquin Intersection improvement and the Meacham Streetscape Stage I.

This section details the dedicated Program Manager and Project Manager roles, the availability of additional management support as needed, and the suite of technical, construction, and administrative resources that can be deployed to meet project-specific demands. It also includes our anticipated effort across the individual projects included in the TIF Capital Improvement Program, ensuring clear visibility into the staffing levels, responsibilities, and cost expectations required to deliver consistent, high-quality program management for the Village.

These rates includes any vehicle use expenses and we will bill the Village monthly for services rendered. We commit to these rates for May 1, 2026 to April 30, 2027 to remain in alignment with the Village's fiscal year and contract period for this work.

PRIMARY LEADERSHIP TEAM

Program Manager – Dave Lawry, PE, MPA | $206/hr
Responsible for executive-level oversight of the TIF program, coordination with Village leadership, strategic planning, and highlevel issue resolution.

TIF Project Manager – Scott Shirley, PE | $202/hr
Serves as daily point of contact and primary manager for TIF CIP execution, schedules, budgets, consultant coordination, and reporting.

Alternate Project Manager – Jeffrey Maczko, PE, CFM | $202/hr
Provides project management support as needed, including leading subprojects, representing the Village in meetings, and backfilling PM duties during periods of peak workload or absence.

The anticipated labor effort and program costs are estimated on the following page.

SUPPORT PERSONNEL – AS REQUIRED

To complement our program management team, we have assembled a flexible bench of technical, engineering, and administrative support personnel whose services can be deployed as project needs evolve. These professionals provide targeted expertise in areas such as design review, construction oversight, utility coordination, CADD/GIS support, and project administration, ensuring that the Village receives the right level of support at the right time. The following proposed rates for support personnel reflect the range of skills and disciplines available to supplement the TIF management team and maintain continuity and efficiency across all assigned projects.

▪ **Civil Associate**	$115 to $125/hour
▪ **Civil Engineer I / II**	$140 to $175/hour
▪ **Construction Inspector / Resident Engineer**	$135 to $175/hour
▪ **Traffic/Transportation Engineer**	$140 to $175/hour
▪ **CADD Designer / Technician**	$135 to $165/hour
▪ **GIS Technician**	$145 to $175/hour

The specific need, scope, and utilization of any support personnel will be coordinated in advance with, and subject to approval by, the Village's Engineering Division Manager to ensure alignment with project priorities and budget expectations. No support staff will be engaged without prior Village authorization and resumes and qualifications for proposed personnel can be provided at any time at the Village's request to confirm technical fit, experience, and availability.

PROPOSED HOURLY RATES

VILLAGE OF SCHAUMBURG - ASSUMED LABOR SCHEDULE FOR TIF MANAGEMENT SERVICES FY26/27 (Hrs/Month)															
		2026								2027					
PROJECT DESCRIPTION	PROPOSED MANAGER	MAY	JUN	JUL	AUG	SEP	OCT	NOV	DEC	JAN	FEB	MAR	APR	TOTAL HOURS	HOURLY RATE	COST
Program Management	David Lawry	60	60	60	60	60	60	60	60	60	60	60	60	720	$206	$148,320
90N Park Stage II - Construction Engineering	Scott Shirley	30	20	20	4	4	4	4	4	0	0	0	0	90	$202	$18,180
90N Park Stage III - Design Engineering	Scott Shirley	10	10	10	10	20	20	20	20	20	24	24	24	212	$202	$42,824
90N Pedestrian Bridge - Design Engineering	Scott Shirley	10	10	10	10	10	20	20	20	20	20	30	30	210	$202	$42,420
Hammond and Algonquin Intersection Improvements - Construction Engineering	Scott Shirley	10	10	10	20	20	20	20	20	20	20	20	20	210	$202	$42,420
North Meacham Road Streetscape Stage II - Design Engineering	Scott Shirley	10	10	10	10	10	10	20	20	20	10	10	10	150	$202	$30,300
90 North District Roadway Re-Alignment Thoreau Drive - Design Engineering	Scott Shirley	4	10	10	20	20	20	20	20	40	40	20	20	244	$202	$49,288
Walden Subdivision Water and Sanitary Study - Design Engineering	Scott Shirley	10	10	20	20	20	40	40	20	30	30	20	20	280	$202	$56,560
Meacham/Algonquin Intersection Improvement	Scott Shirley	4	4	4	4	4	4	0	0	0	0	0	0	24	$202	$4,848
Meacham Streetscape Stage I	Scott Shirley	20	20	10	4	4	4	0	0	0	0	0	0	62	$202	$12,524
	TOTAL	148	144	154	158	168	198	204	184	210	204	184	184	2202		$447,684

We look forward to meeting with Village staff upon selection to confirm that our staffing allocations, availability assumptions, and anticipated level of effort align precisely with the Village's needs and preferences. Our team is fully prepared to adjust involvement to match the Village's expectations for service levels, presence, and responsiveness.

RESOLUTION NO. R-26-____

A RESOLUTION AUTHORIZING THE VILLAGE MANAGER AND VILLAGE CLERK TO EXECUTE AN AGREEMENT FOR 90 NORTH TIF MANAGEMENT SERVICES WITH MICHAEL BAKER INTERNATIONAL

WHEREAS, the President and Board of Trustees wish to execute an agreement with Michael Baker International. of Chicago, IL for the 90 North TIF Management Services; and

WHEREAS, it would be in the best interests of the citizens of Schaumburg to execute the attached Agreement, Exhibit "A".

NOW, THEREFORE, BE IT RESOLVED BY THE PRESIDENT AND BOARD OF TRUSTEES OF THE VILLAGE OF SCHAUMBURG:

SECTION ONE: That the Village Manager and Village Clerk be and hereby are authorized and directed to execute the attached Agreement, Exhibit "A", between the Village of Schaumburg and Michael Baker International. of Chicago, IL**.**

SECTION TWO: That the Village Manager and Village Clerk be and hereby are authorized to sign any documents in furtherance of this Resolution.

SECTION THREE: That this Resolution shall be in full force and effect after passage and approval as required by law.

AYES:

NAYS:

ABSENT:

PASSED AND APPROVED this _____ day of _____, 2026.

_____
Village President

ATTEST:

_____
Village Clerk

VILLAGE OF SCHAUMBURG
PROFESSIONAL SERVICES AGREEMENT FOR
FISCAL YEAR 2026-27 MWRD IICP SERVICES SSES
REHABILITATION DESIGN AND CONSTRUCTION SERVICES

THIS AGREEMENT is dated as of the ___day of _____, 20_ ***("Agreement")*** and is by and between the **VILLAGE OF SCHAUMBURG,** an Illinois municipal corporation ***("Village")*** and the Consultant identified in Subsection 1A below.

IN CONSIDERATION OF the recitals and the mutual covenants and agreements set forth in the Agreement, and pursuant to the Village's statutory powers, the parties agree as follows:

SECTION 1. CONSULTANT.

A. Engagement of Consultant. The Village desires to engage the Consultant identified below to provide all necessary professional consulting services and to perform the work in connection with the project identified below:

Consultant Firm Name: RJN:Group
Street Address: 2655 Warrenville Road, Suite 225
City, State, Zip: Downers Grove, IL 60515
Telephone: 630-682-4700
Email: myoung@lrjnmail.com

B. Project Description.
Provide professional engineering and specialty field services to assist the Village in meeting the long-term program requirements of MWRD Infiltration/Inflow Control Program (IICP). Services related to flow monitoring, pipe assessment, design of sanitary sewer rehabilitation, and construction observation of sanitary sewer rehabilitation.

C. Representations of Consultant. The Consultant has submitted to the Village a description of the services to be provided by the Consultant, a copy of which is attached as Exhibit 1 to this Agreement ***("Services")*** The Consultant represents that it is financially solvent, has the necessary financial resources, and is sufficiently experienced and competent to perform and complete the professional consulting services set forth in Exhibit 1 in a manner consistent with the standards of professional practice by recognized consulting firms providing services of a similar nature.

D. Agreement Amount. The total amount billed by the Consultant for the Services under this Agreement shall not exceed $406,572 as outlined in Exhibit 1, including reimbursable expenses as identified in Exhibit 1, unless amended pursuant to Subsection 8A of this Agreement.

SECTION 2. SCOPE OF SERVICES.

A. Retention of the Consultant. The Village retains the Consultant to perform, and the Consultant agrees to perform, the Services.

B. Services. The Consultant shall provide the Services pursuant to the terms and conditions of this Agreement.

C. Commencement; Time of Performance. The Consultant shall commence the Services immediately upon receipt of written notice from the Village that this Agreement has been fully executed by the Parties or on the date specified in Exhibit 1 (the ***"Commencement Date"***). The Consultant shall diligently and continuously prosecute the Services until the completion of the Services, but in no event later than 365 days after the date of the execution of this Agreement (**"Time *of Performance"*).**

D. Reporting. The Consultant shall regularly report to the Village, regarding the progress of the Services during the term of this Agreement.

SECTION 3. COMPENSATION AND METHOD OF PAYMENT.

A. Agreement Amount. The total amount billed for the Proposal during the term of this Agreement shall not exceed the amount identified as the Agreement Amount in Subsection 1D of this Agreement, without the prior express written authorization of the Village.

B. Invoices and Payment. The Consultant shall be paid as provided in Exhibit 1. The Consultant shall submit invoices to the Village in an approved format for those portions of the Services performed and completed by the Consultant. The amount billed in any such invoice shall be based on the method of payment set forth in Exhibit 1. The Village shall pay to the Consultant the amount billed within 30 days after its receipt and approval of such an invoice.

C. Records. The Consultant shall maintain records showing actual time devoted and costs incurred, and shall permit the authorized representative of the Village to inspect and audit all data and records of the Consultant for work done under the Agreement. The records shall be made available to the Village at reasonable times during the Agreement period, and for three years after the termination of the Agreement.

D. Claim In Addition To Agreement Amount. If the Consultant wishes to make a claim for additional compensation as a result of action taken by the Village, the Consultant shall provide written notice to the Village of such claim within 7 days after occurrence of such action as provided by Subsection 8D of this Agreement, and no claim for additional compensation shall be valid unless made in accordance with this Subsection. Any changes in the Agreement Amount shall be valid only upon written amendment pursuant to Subsection 8A of this Agreement. Regardless of the decision of the Village relative to a claim submitted by the Consultant, the Consultant shall proceed with all of the Services required to complete the Services under this Agreement as determined by the Village without interruption.

E. Taxes, Benefits and Royalties. The Agreement Amount includes all applicable federal, state, and local taxes of every kind and nature applicable to the Services as well as all taxes, contributions, and premiums for unemployment insurance, old age or retirement benefits, pensions, annuities, or similar benefits and all costs, royalties and fees arising from the use on, or the incorporation into, the Services, of patented or copyrighted equipment, materials, supplies, tools, appliances, devices, processes, or inventions. All claim or right to claim additional compensation by reason of the payment of any such tax, contribution, premium, costs, royalties, or fees is hereby waived and released by Consultant.

F. Final Acceptance. The Services, or, if the Services are to be performed in separate phases, each phase of the Services, shall be considered complete on the date of final written acceptance by the Village of the Services or each phase of the Services, as the case may be, which acceptance shall not be unreasonably withheld or delayed.

SECTION 4. PERSONNEL; SUBCONTRACTORS.

A. **Key Project Personnel.** The Key Project Personnel identified in Exhibit 1 shall be primarily responsible for carrying out the Services on behalf of the Consultant. The Key Project Personnel shall not be changed without the Village's prior written approval.

B. **Availability of Personnel.** The Consultant shall provide all personnel necessary to complete the Services including, without limitation, any Key Project Personnel identified in this Agreement. The Consultant shall notify the Village as soon as practicable prior to terminating the employment of, reassigning, or receiving notice of the resignation of, any Key Project Personnel. The Consultant shall have no claim for damages and shall not bill the Village for additional time and materials charges as the result of any portion of the Services which must be duplicated or redone due to such termination or for any delay or extension of the Time of Performance as a result of any such termination, reassigning, or resignation.

C. **Approval and Use of Subcontractors.** The Consultant shall perform the Services with its own personnel and under the management, supervision, and control of its own organization unless otherwise approved by the Village in writing. All subcontractors and subcontracts used by the Consultant shall be acceptable to, and approved in advance by, the Village. The Village's approval of any subcontractor or subcontract shall not relieve the Consultant of full responsibility and liability for the provision, performance, and completion of the Services as required by the Agreement. All Services performed under any subcontract shall be subject to all of the provisions of this Agreement in the same manner as if performed by employees of the Consultant. For purposes of this Agreement, the term "Consultant" shall be deemed also lo refer to all subcontractors of the Consultant, and every subcontract shall include a provision binding the subcontractor to all provisions of this Agreement.

D. **Removal of Personnel and Subcontractors.** If any personnel or subcontractor fails to perform the Services in a manner satisfactory to the Village, the Consultant shall immediately upon notice from the Village remove and replace such personnel or subcontractor. The Consultant shall have no claim for damages, for compensation in excess of the amount contained in this Agreement or for a delay or extension of the Time of Performance as a result of any such removal or replacement.

SECTION 5. CONFIDENTIAL INFORMATION.

A. **Confidential Information.** The term ***"Confidential Information"*** shall mean information designated as "Confidential" in the possession or under the control of the Village relating lo the technical, business or corporate affairs of the Village; Village property; user information, including, without limitation, any information pertaining to usage of the Village's computer system, including and without limitation, any information obtained from server logs or other records of electronic or machine readable form; and the existence of, and terms and conditions of, this Agreement. Village Confidential Information shall not include information that can be demonstrated: (i) to have been rightfully in the possession of the Consultant from a source other than the Village prior to the lime of disclosure of said information lo the Consultant under this Agreement ***("Time of Disclosure");*** (ii) to have been in the public domain prior to the Time of Disclosure; (iii) to have become part of the public domain after the Time of Disclosure by a publication or by any other means except an unauthorized act or omission or breach of this Agreement on the part of the Consultant or the Village; or (iv) to have been supplied to the Consultant after the Time of Disclosure without restriction by a third party who is under no obligation to the Village to maintain such information in confidence.

B. No Disclosure of Confidential Information by the Consultant. The Consultant acknowledges that it shall, in performing the Services for the Village under this Agreement, have access to or be directly or indirectly exposed to Confidential Information. The Consultant shall hold confidential all Confidential Information and shall not disclose or use such Confidential Information without express prior written consent of the Village unless required to perform the Services set forth in this Agreement. The Consultant shall be permitted to disclose Confidential Information as necessary to its subcontractors to fulfill the obligations required by this Agreement. The Consultant shall use reasonable measures at least as strict as those the Consultant uses to protect its own confidential information. Such measures shall include, without limitation, requiring subcontractors of the Consultant to execute a non-disclosure agreement before obtaining access to Confidential Information.

SECTION 6. STANDARD OF CARE: INDEMNIFICATION: INSURANCE.

A. Standard of Care. The Consultant warrants that the Services shall be performed in accordance with the standards of professional practice, care, and diligence practiced by recognized consulting firms in performing services of a similar nature in the same locale in existence at the time of performance of this Agreement. The standard of care expressed shall be in addition to any other representations expressed in the Agreement, or expressed or implied by law, which are hereby reserved unto the Village.

B. Indemnification. The Consultant shall, without regard to the availability or unavailability of any insurance either of the Village or the Consultant, indemnify and save harmless, the Village, its officials, and its employees, against any and all damages, liabilities, losses, and expenses, including reasonable attorneys' fees and administrative expenses recoverable under applicable law, to the extent arising, out of or caused by, the Consultant's negligent or wrongful acts or omissions in the performance of, or failure to perform, the Services or any part thereof, except to the extent caused by the negligence of the Village.

C. Insurance. Contemporaneous with the Consultant's execution of this Agreement, the Consultant shall provide certificates of insurance and upon request, policies of insurance, all with coverages and limits acceptable to the Village, and evidencing at least the minimum insurance coverages and limits as set forth in Exhibit 2 to this Agreement. But in no event shall any work begin without an insurance certificate or policy having been provided and approved by the Village. Such certificates shall be from companies with a general rating of A and a financial size category of Class X or better, in Best's Insurance Guide. Such certificates of insurance shall provide that no insurer change, modification in, or cancellation of any insurance shall become effective until the expiration of 30 days after written notice thereof shall have been given to the Village. The Consultant shall, at all times during the term of this Agreement, maintain and keep in force, at the Consultant's expense, the insurance coverages provided above, including without limitation at all times to meet the Standard of Care requirements of Subsection 6(A) of this section.

D. No Personal Liability. No elected or appointed official or employee of the Village shall be personally liable, in law or in contract, to the Consultant as the result of the execution of this Agreement. Likewise, no claims or suits shall be made against the employees of the Consultant as a result of the execution of this Agreement.

SECTION 7. CONSULTANT AGREEMENT GENERAL PROVISIONS.

A. Relationship of the Parties. The Consultant shall act as an independent contractor in providing and performing the Services. Nothing, in or done pursuant to this Agreement, shall be construed (i) to create the relationship of principal and agent, employer and employee, partners, or joint venturers between the Village and Consultant; or (ii) to create any relationship between the Village and any subcontractor of the Consultant.

B. Conflict of Interest. The Consultant represents and certifies that, to the best of its knowledge, (1) no Village employee or agent is interested in the business of the Consultant or this Agreement; (2) as of the date of this Agreement neither the Consultant nor any person employed or associated with the Consultant has any interest that would conflict in any manner or degree with the performance of the obligations under this Agreement; and (3) neither the Consultant nor any person employed by or associated with the Consultant shall at any time during the term of this Agreement obtain or acquire any interest that would conflict in any manner or degree with the performance of the obligations under this Agreement.

C. No Collusion. The Consultant represents and certifies that the Consultant is not barred from contracting with a unit of state or local government as a result of (i) a delinquency in the payment of any tax administered by the Illinois Department of Revenue unless the Consultant is contesting, in accordance with the procedures established by the appropriate revenue act, its liability for the tax or the amount of the tax, as set forth in Section 11-42.1-1 *et seq.* of the Illinois Municipal Code, 65 ILCS 5/11-42.1-1 *et seq.;* or (ii) a violation of either Section 33E-3 or Section 33E-4 of Article 33E of the Criminal Code, 720 ILCS 5/33E-1 *et* seq. The Consultant represents that the only persons, firms, or corporations interested in this Agreement as principals are those disclosed to the Village prior to the execution of this Agreement, and that this Agreement is made without collusion with any other person, firm, or corporation. If at any time it shall be found that the Consultant has, in procuring this Agreement, colluded with any other person, firm, or corporation, then the Consultant shall be liable to the Village for all loss or damage that the Village may suffer, and this Agreement shall, at the Village's option, be null and void.

D. Sexual Harassment Policy. The Consultant certifies that it has a written sexual harassment policy in full compliance with Section 2-105(A) (4) of the Illinois Human Rights Act, 775 ILCS 5/2-105(A) (4).

E. Patriot Act Compliance. The Consultant represents and warrants to the *Village* that neither it nor any of its principals, shareholders, members, partners, or affiliates, as applicable, is a person or entity named as a Specially Designated National and Blocked Person (as defined in Presidential Executive Order 13224) and that it is not acting, directly or indirectly, for or on behalf of a Specially Designated National and Blocked Person. The Consultant further represents and warrants to the Village that the Consultant and its principals, shareholders, members, partners, or affiliates, as applicable, are not, directly or indirectly, engaged in, and are not facilitating, the transactions contemplated by this Agreement on behalf of any person or entity named as a Specially Designated National and Blocked Person. The Consultant hereby agrees to defend, indemnify and hold harmless the Village, its corporate authorities, and all Village elected or appointed officials, officers, employees, agents, representatives, engineers, and attorneys, from and against any and all claims, damages, losses, risks, liabilities, and expenses (including reasonable attorneys' fees and costs) arising from or related to any breach of the representations and warranties in this subsection.

F. **Termination.** Notwithstanding any other provision hereof, the Village may terminate this Agreement at any time upon 15 days prior written notice to the Consultant. In the event that this Agreement is so terminated, the Consultant shall be paid for Services actually performed and reimbursable expenses actually incurred, if any, prior to termination, not exceeding the value of the Services completed as determined as provided in Exhibit 1. The Consultant may also terminate the Agreement in the event the Village fails to make payment for services rendered, but only after the Consultant has provided written notice to the Village of the lack of payment and allowed the Village 30 days to make payment or contest the payment or amount.

G. **Term.** The time of performance of this Agreement, unless terminated pursuant to the terms of this Agreement, shall expire on the date the Village determines that all of the Services under this Agreement are completed or upon final payment to Consultant. A determination of completion shall not constitute a waiver of any rights or claims which the Village may have or thereafter acquire with respect to any breach hereof by the Consultant or any right of indemnification of the Village by the Consultant.

H. **Compliance with Laws and Grants.** Consultant shall give all notices, pay all fees, and take all other action that may be necessary to ensure that the Services are provided, performed, and completed in accordance with all required governmental permits, licenses, or other approvals and authorizations that may be required in connection with providing, performing, and completing the Services, and with all applicable building and zoning statutes, ordinances, rules, and regulations, and the Fair Labor Standards Act; any statutes regarding qualification to do business; any statutes prohibiting discrimination because of, or requiring affirmative action based on, race, creed, color, national origin, age, sex, or other prohibited classification, including, without limitation, the Americans with Disabilities Act of 1990, 42 U.S.C. §§ 12101 *et seq.*, and the Illinois Human Rights Act, 775 ILCS 5/1-101 *et seq.* Consultant shall also comply with all conditions of any federal, state, or local grant received by Village and made known to the Consultant with respect to this Agreement or the Services.

Consultant shall be solely liable for any fines or civil penalties that are imposed by any governmental or quasi-governmental agency or body that may arise, or be alleged to have arisen, out of or in connection with Consultant's, or its subcontractors', performance of, or failure to perform, the Services or any part thereof.

I. **Default.** If it should appear at any time that the Consultant has failed or refused to prosecute, or has delayed in the prosecution of, the Services with diligence at a rate that permits completion of the Services in full compliance with the requirements of this Agreement, or has otherwise failed, refused, or delayed to perform or satisfy the Services or any other material requirement of this Agreement (***"Event of Default"),*** and fails to cure any such Event of Default within ten business days after the Consultant's receipt of written notice of such Event of Default from the Village, then the Village shall have the right, without prejudice to any other remedies provided by law or equity, to pursue any one or more of the following remedies:

1. **Cure by Consultant.** The Village may require the Consultant, within a reasonable lime, to complete or correct all or any part of the Services that are the subject of the Event of Default; and to take any or all other action necessary to bring the Consultant and the Services into compliance with this Agreement.

2. **Termination of Agreement by Village.** The Village may terminate this Agreement without liability for further payment of amounts due or to become due under this Agreement.

3. **Withholding of Payment by Village.** The Village may withhold from any payment, whether or not previously approved, or may recover from the Consultant, any and all costs, including attorneys' fees and administrative expenses, incurred by the Village as the result of any Event of Default by the Consultant or as a result of reasonable actions taken by the Village in response to any Event of Default by the Consultant.

J. **No Additional Obligation.** The Parties acknowledge and agree that the Village is under no obligation under this Agreement or otherwise to negotiate or enter into any other or additional contracts or agreements with the Consultant or with any vendor solicited or recommended by the Consultant.

K. **Village Board Authority.** Notwithstanding any provision of this Agreement, any negotiations or agreements with, or representations by the Consultant to vendors shall be subject to the approval of the Village Board of Trustees. The Village shall not be liable to any vendor or other third party for any agreements made by the Consultant, purportedly on behalf of the Village, without the knowledge and approval of the Village Trustees.

L. **Mutual Cooperation.** The Village agrees to cooperate with the Consultant in the performance of the Services, including meeting with the Consultant and providing the Consultant with such non-confidential information that the Village may have that may be relevant and helpful to the Consultant's performance of the Services. The Consultant agrees to cooperate with the Village in the performance of the Services to complete the work and with any other consultants engaged by the Village.

M. **News Releases.** The Consultant shall not issue any news releases or other public statements regarding the Services without prior approval from the Village

N. **Ownership.** Designs, drawings, plans, specifications, photos, reports, information, observations, calculations, notes, and any other documents, data, or information, in any form, prepared, collected, or received by the Consultant in connection with any or all of the Services to be performed under this Agreement **("Documents'1** shall be and remain the exclusive property of the Village. At the Village's request, or upon termination of this Agreement, the Consultant shall cause the Documents to be promptly delivered to the Village upon payment of all sums due and owing Consultant under the Agreement. Any reuse of Documents other than for the purposes of this Agreement shall be at Village risk and Consultant shall not be liable for any reuse of the Documents.

0. **GIS Data.** ***[NOTE:*** **Use *this only if applicable]*** The Village has developed digital map information through Geographic Information Systems Technology ***("GIS Data')*** concerning the real property located within the Village. If requested to do so by the Consultant, the Village agrees to supply the Consultant with a digital copy of the GIS Data, subject to the following conditions:

1. **Limited Access to GIS Data.** The GIS Data provided by the Village shall be limited to the scope of the Services that the Consultant is to provide for the Village;

2. **Purpose of GIS Data.** The Consultant shall limit its use of the GIS Data to its intended purpose of furtherance of the Services; and

3. **Agreement with Respect to GIS Data.** The Consultant does hereby acknowledge and agree that:

a. **Trade Secrets of the Village.** The GIS Data constitutes proprietary materials and trade secrets of the Village and, shall remain the property of the Village;

b. **Consent of Village Required.** The Consultant will not provide or make available the GIS Data in any form to anyone without the prior written consent of the Village;

c. **Supply to Village.** At the request of the Village, the Consultant shall supply the Village with any and all information that may have been developed by the Consultant based on the GIS Data;

d. **No Guarantee of Accuracy.** The Village makes no guarantee as to the accuracy, completeness, or suitability of the GIS Data in regard to the Consultant's intended use thereof; and

e. **Discontinuation of Use.** At such time as the Services have been completed to the satisfaction of the Village, the Consultant shall cease its use of the GIS Data for any purpose whatsoever; and, upon request, an authorized representative of the Village shall be afforded sufficient access to the Consultant's premises and data processing equipment to verify that all use of the GIS Data has been discontinued.

SECTION 8. GENERAL PROVISIONS.

A. Amendment. No amendment or modification to this Agreement shall be effective unless and until such amendment or modification is in writing, properly approved in accordance with applicable procedures, and executed.

B. Assignment. This Agreement may not be assigned by the Village or by the Consultant without the prior written consent of the other party.

C. Binding Effect. The terms of this Agreement shall bind and inure to the benefit of the Parties hereto and their agents, successors, and assigns.

D. Notice. Any notice or communication required or permitted to be given under this Agreement shall be in writing and shall be delivered (i) personally, (ii) by a reputable overnight courier, (iii) by certified mail, return receipt requested, and deposited in the U.S. Mail, postage prepaid, (iv) by facsimile, or (v) by electronic internet mail ("e-mail"). Facsimile notices shall be deemed valid only to the extent that they are (a) actually received by the individual to whom addressed and (b) followed by delivery of actual notice in the manner described in either (i), (ii), or (iii) above within three business days thereafter at the appropriate address set forth below. E-mail notices shall be deemed valid and received by the addressee thereof when delivered by e-mail and (a) opened by the recipient on a business day at the address set forth below, and (b) followed by delivery of actual notice in the manner described in either (i), (ii) or (iii) above within three business days thereafter at the appropriate address set forth below. Unless otherwise expressly provided in this Agreement, notices shall be deemed received upon the earlier of (a) actual receipt; (b) one business day after deposit with an overnight courier as evidenced by a receipt of deposit; or (c) three business days following deposit in the U.S. mail, as evidenced by a return receipt. By notice complying with the requirements of this Subsection, each Party shall have the right to change the address or the addressee, or both, for all future notices and communications to such party, but no notice of a change of addressee or address shall be effective until actually received.

Notices and communications to the Village shall be addressed to, and delivered at, the following address:

Village of Schaumburg
714 S. Plum Grove Road
Schaumburg, Illinois 60193
Attention : Brent McQueen
E-mail: bmcqueen@schaumburg.com

Notices and communications to the Consultant shall be addressed to, and delivered at, the following address:

Consultant Firm Name: RJN GROUP
Street Address: 2655 Warrenville Road, Suite 225
City, State, Zip: Downers Grove, IL 60515
Attention: Michael Young
Facsimile: 630-682-4754
Email: myoung@rjnmail.com

E. **Third Party Beneficiary.** No claim as a third party beneficiary under this Agreement by any person, firm, or corporation other than the Consultant shall be made or be valid against the Village.

F. **Provisions Severable.** If any term, covenant, condition, or provision of this Agreement is held by a court of competent jurisdiction to be invalid, void, or unenforceable, the remainder of the provisions shall remain in full force and effect and shall in no way be affected, impaired or invalidated.

G. **Time.** Time is of the essence in the performance of this Agreement.

H. **Governing Laws.** This Agreement shall be interpreted according to the laws of the State of Illinois.

I. **Entire Agreement.** This Agreement constitutes the entire agreement between the parties and supersedes any and all previous or contemporaneous oral or written agreements and negotiations between the Village and the Consultant with respect to the Proposal and the Services.

J. **Waiver.** No waiver of any provision of this Agreement shall be deemed to or constitute a waiver of any other provision of this Agreement (whether or not similar) nor shall any such waiver be deemed to or constitute a continuing waiver unless otherwise expressly provided in this Agreement.

K. **Exhibit.** Exhibits 1 and 2, are attached hereto, and by this reference incorporated in and made a part of this Agreement. In the event of a conflict between the Exhibit and the text of this Agreement, the text of this Agreement shall control.

L. **Rights Cumulative.** Unless expressly provided to the contrary in this Agreement, each and every one of the rights, remedies, and benefits provided by this Agreement shall be cumulative and shall not be exclusive of any other such rights, remedies, and benefits allowed by law.

M. Counterpart Execution. This Agreement may be executed in several counterparts, each of which, when executed, shall be deemed to be an original, but all of which together shall constitute one and the same instrument.

[SIGNATURES FOLLOW]

VILLAGE OF SCHAUMBURG

By: _____
Village Manager

ATTEST:

By: _____
Village Clerk

CONSULTANT

By: Michael A. Young

TITLE: Senior Vice President

ATTEST:

By: Thomas Rouge

TITLE: REGIONAL MANAGER

EXHIBIT 1

SCOPE OF SERVICES

AGREEMENT AMOUNT

[TO BE PREPARED BY CONSULTANT AND ACCEPTABLE TO VILLAGE]

[INCLUDE HOURLY RATES, LUMP SUM AMOUNTS, REIMBURSABLE COSTS, SCHEDULE FOR LUMP SUM OR INSTALLMENT PAYMENTS, INVOICE FORMAT, ETC.]

[

March 13, 2026

Mr. Brent McQueen, P.E., CFM, CPESC
Engineering Division Manager, Engineering & Public Works
Village of Schaumburg
714 South Plum Grove Road
Schaumburg, Illinois 60193-4329

Subject: Proposal for Fiscal Year 2026-27 MWRD IICP Services – Annual Reporting, SSES, Design, Construction Management

Dear Mr. McQueen:

RJN Group, Inc. (RJN) is pleased to submit this proposal to provide Professional Engineering and Specialty Field Services to assist the Village of Schaumburg (Village) in meeting the Long-Term Program requirements of the Metropolitan Water Reclamation District of Greater Chicago (MWRD) Infiltration / Inflow Control Program (IICP).

This proposal outlines the eleventh year of work for the MWRD IICP. The following table provides a summary of the work completed in each of the previous years. Although the fiscal year 2014/15 is included in the summary, it primarily served as a planning and preparation year.

2014/15	- Flow Meter Purchase and Kickoff
2015/16	- Flow Meter Planning and Coordination - Walnut Basin Flow Monitoring - Replace Flow Meter Equipment Purchase
2016/17	- MWRD IICP Annual Reporting - Kessel/Braintree Basins Flow Monitoring - Walnut Basin SSES - GIS Collection of Rim Elevations and Locations - Walnut Lane Lift Station Study
2017/18	- MWRD IICP Annual Reporting - Walnut Lift Station Downstream Capacity Flow Monitoring - Kessel Park Basin SSSES - Walnut and Kessel Basin Rehab Design - Walnut Basin Construction Management/Observation
2018/19	- MWRD IICP Annual Reporting, Private Sector Program, and Long-Term Plan - Braintree Basin Flow Monitoring - North Braintree Basin SSES - North Braintree Basin Rehab Design - Walnut and Kessel Basins Construction Management/Observation
2019/20	- MWRD IICP Annual Reporting, Private Sector Program, and Long-Term Plan

2019/20	- Bode Rd LS and Cedarcrest Basins Flow Monitoring - Bode Rd LS Basin SSES and Survey - Bode Rd LS Basin Rehab Design - North Braintree Basin Rehab Construction Management/Observation - Walnut Basin Rehab Construction Management/Observation
2020/21	- MWRD IICP Annual Reporting - Downstream Walnut Basin Flow Monitoring - South Braintree Basin SSES - South Braintree Basin Rehab Design - Bode Rd LS Basin Rehab Construction Management/Observation
2021/22	- MWRD IICP Annual Reporting - South Braintree Basin Rehab Design - South Braintree Basin Point Repair Construction Management/Observation - East Schaumburg Flow Monitoring (Partial) - Braintree Basin Hydraulic Model - Jeffrey Ln and Illinois Ave CMP Assessment and Preliminary Design - Bode Rd Lift Station Force Main Assessment
2022/23	- MWRD IICP Annual Reporting - South Braintree Basin Rehab Design - South Braintree Basin Construction Management/Observation - ACP CCTV Assessment and Preliminary Design (over 10") - ACP (over 10") Point Repair Design - East Schaumburg Flow Monitoring Installs
2023/24	- MWRD IICP Annual Reporting - Downstream Walnut Basins 7 & 9 – MHI, Smoke Testing, and Dye Testing - ACP CCTV Assessment and Preliminary Design (10" and under) - South Braintree High Priority Lining Design - ACP (over 10") High Priority Lining Design - South Braintree Lining Construction Management/Observation - ACP Point Repair Construction Management/Observation - East Schaumburg Flow Monitoring (continued)
2024/25	- MWRD IICP Annual Reporting - Downstream Walnut Basins 7 & 9 – CCTV - ACP (10" and Under) Point Repair Design - ACP (over 10") High Priority Lining Construction Management/Observation - South Braintree High Priority Lining Construction Management/Observation
2025/26	- MWRD IICP Annual Reporting - SSES of Select Cedarcrest Area - ACP(10" and under) HP Lining, N Braintree and Bode LS Areas HP Manhole Rehab Design - ACP (10" and under) Point Repair, N Braintree and Bode LS Areas Manhole Rehab Construction Management/Observation - Flow Monitoring Post High Priority Rehab (Meter Installs)

As a reference, a map exhibit is attached in Exhibit D to show the work completed in previous years and the work proposed for the upcoming fiscal year as discussed with the Village.

The services to be provided under the MWRD IICP for Fiscal Year 2026/27 are as follows:

- MWRD IICP Annual Reporting
- SSES: High Peaking Factor areas in parts of Bode and Walnut Lane
    - Bode-04
    - WL-05
- Design: Select High Priority Defect Manhole Rehabilitation
    - Portions of Cedarcrest, Walnut, and Kessel areas
- Construction Management and Observation:
    - ACP (10" and under) High Priority Lining
- Flow Monitoring:
    - North Braintree Post High Priority Rehabilitation Benchmarking (continued)

MWRD Annual Reporting

As a reminder, MWRD reviewed the Village's Long-Term Operations and Maintenance Plan (LTOMP) and Private Sector Plan (PSP), and it was approved on March 22, 2021.

The annual paperwork for the MWRD IICP will be completed with assistance from Village staff. Now that the short-term program is complete, these services shift to the long-term program, with the seventh submittal due on March 1, 2027.

SSES For Select Bode and Walnut Lane Areas

The Village has completed SSES in all three high priority areas under the short-term program (Walnut, Kessel, and North Braintree). The MWRD's long-term requirements include continuing SSES at 2% of the system per year. This has been progressing with the SSES of the Bode Road Lift Station Areas in 2019/20, South Braintree basins in 2020/21, the Downstream Walnut Basins in 2023-2025, and Bode Basins in 2025/26. To date, the long-term requirements are being met, with the select high peaking factor meters basins next on the list for SSES. The chosen basins are BODE-04 and WL-05, which have 9.63 and 28.8 peaking factors, respectively, based on the full Village flow monitoring efforts and corresponding I/I analysis.

Per the Village GIS, basins BODE-04 and WL-05 include 26,020 linear feet of sanitary sewer and 119 sanitary manholes. The SSES work includes smoke testing, dye flooding, manhole inspection, and CCTV review with recommendations. See Exhibit A for the detailed scope of services as they relate to the SSES activities. As with previous studies, the Village will be providing the sewer televising services, SewerAI (via RJN's partnership agreement) will be utilized to PACP code the CCTV, and RJN will be responsible for QC and analysis of the footage.

Design and Bidding Engineering Services

The engineering services for 2026/27 will be manhole rehabilitation design and bidding services for previously inspected manholes. The basins for manhole rehabilitation design and bidding services include:

- Bode-00, 01, 02, and 03 (inspected in 2019)
- SCHMWL-01, 02, 03, and 04 (inspected in 2016)
- Kessel-01 (inspected in 2021)

The design associated in this proposal includes rehabilitation of High Priority defects identified from manhole inspection activities ranging back to 2016. It is imperative that these efforts are completed in order to maintain good standing with the MWRD IICP and the requirements to fix High Priority defects within 3 years. While the time constraints for rehabilitation have not been met up to this point, due to budget limitations, MWRD has been satisfied with the efforts put forth in fixing the immediate needs of the mainline sewers and laterals. The high priority manhole rehabilitation will be designed and bid in accordance with the construction budget that was approved by the Village. It is expected to include manhole lining, replacement, grading, and other rehabilitation techniques. The design and bidding will be completed near the end of fiscal year 2026/27 in order to complete construction in the 2027/28 fiscal year.

Following this design, the oldest remaining manhole inspections in need of rehabilitation will be from 2020, and the Village will be in a good position for design and construction for those identified high priority defects in subsequent years.

Construction Engineering Services

The construction services will be Construction Management and Observation of the Small ACP (10" and under) High Priority Lining, for which the design was completed in 2025/26. The scope of construction is anticipated to include services for the following work: approximately 16,130 LF of sewer cleaning, televising, and lining (6" - 10" diameter), one (1) point repair, cutting eleven (11) protruding taps, dye testing of eleven (11) existing service connections, reinstatement of two-hundred fourteen (214) laterals, grouting of one-hundred twenty-six (126) laterals, cleaning and televising of ninety (90) laterals, lining of eighty-eight laterals (88), traffic control and protection, restoration and other related and incidental work. The rehabilitation shall be performed by private contractors, chosen through bidding, while being managed and supervised by RJN construction staff.

Flow Monitoring Services

Flow Monitors were installed in 2025/26 in order to capture data from the higher precipitation season in the areas that have had all high priority defects addressed. These basins include Brain-01, 02, 03, 04, 05, and 06 (referred to as North Braintree). Four months of the monitoring period and the analysis will be part of this project. The intention of the monitoring period is to assess the progress of the I/I remediation efforts that the Village has been implementing and benchmark these new I/I levels for these basins.

Program Management & Clarity™

Overall management and planning of the sanitary program to meet MWRD requirements will also be provided. Hours for project management will be allocated in each task described hereinabove.

RJN will provide access to its online data hosting platform **Clarity™**, that includes status of data collection, access to data collected, and all field collected media.

Assuring Quality and Safety

RJN is committed to providing **quality** deliverables. The data collected as a part of this project will be critical in evaluating the Village's sanitary system. RJN's internal quality control (QC) tools within our in-house data management software, as well as our corporate training and QC processes in place will ensure that the project will provide value for the Village.

As an employee-owned firm, RJN's commitment to the **safety** of our employees, Village employees, and the public is paramount. That commitment to safety is demonstrated in our internally developed and audited safety program where our goal is to have all field staff, engineers, and project managers "RJN Safety Certified." Included in the certification is confined-space entry training, temporary traffic control, OSHA 10-hour, fall protection, and many more. Every project follows an RJN Health and Safety Plan (HASP) when completing any field work.

Price and Schedule Summary

This project will be invoiced on a Time and Material and Unit Price basis for a total not-to-exceed fee of **$406,572** (budgetary) as described in the following table and in detail in Exhibit B:

Task Description	FY2026/27 Cost
MWRD Annual Reporting	$14,000
SSES – Bode-04, WL-05	$89,353
Rehabilitation Design and Bidding – Manhole	$113,503
Construction Management – Small ACP HP Lining	$144,916
Flow Monitoring – North Braintree	$44,800
TOTAL	**$406,572**

The project is expected to be completed by April 30, 2027 based on a Notice to Proceed by May 31, 2026. Complete Scope of Services, Pricing, Schedules, and Maps are provided in the following exhibits:

- Exhibit A – Scope of Services
- Exhibit B – Pricing
- Exhibit C – Schedule
- Exhibit D – Project Maps

We are looking forward to the opportunity to continue work with the Village of Schaumburg on this important project. It is our pleasure to submit this proposal to you. Please feel free to contact Tom at 224.587.7366 if you would like to discuss this proposal or have any questions.

Sincerely,

Thomas Romza, PE
Regional Manager

Michael Young, PE
Senior Vice President

EXHIBIT A
SCOPE OF SERVICES

RJN is proposing the following scope of services to conduct the Fiscal Year 2026/27 MWRD IICP Services for the Village of Schaumburg.

A. Project Kickoff

1. Conduct an in-person kickoff meeting with Village staff to discuss the project.
2. Prepare agenda, meeting minutes, and anticipated schedule.
3. Discuss logistics of details within each task of the project.

B. MWRD Annual Reporting

1. Work with the Village to compile the annual submittal to MWRD for Article 8. RJN will complete the following forms;
    a. Long-Term Requirement Annual Summary Report;
    b. High Priority Deficiency Form;
    c. Summary of rehabilitation plan, including a Capital Improvement Program (CIP) as applicable; and
    d. Prioritization/Activity Map Update.
2. Submit completed MWRD forms.
3. Provide overall management of the MWRD program.

C. Cedarcrest Area SSES of basins Bode-04 and WL-05

1. Smoke Testing
    a. Prepare a draft resident smoke testing notification letter for the RJN to send to the affected residents and business owners. The letters will include RJN contact information for use during the smoke testing. If desired, these letters can be formatted as a public service announcement, billing insert, and/or used as a Reverse 911 message sent by the Village. If necessary, provide bilingual letter in Spanish.
    b. Prepare smoke testing door hangers to be hung by RJN staff at each address less than one week prior to smoke testing. The door hangers will also include RJN contact information and can be bilingual if necessary.
    c. Notify the Village and the local fire and police departments of planned smoke testing activities, including daily updates.
    d. Provide equipment, personnel, and smoke as necessary for smoke testing.
    e. During smoke testing, erect smoke testing signs near the testing area and answer resident and Village questions on-site as well as through phone calls.
    f. Use handheld electronic data collection equipment for collecting smoke testing data.
    g. Smoke test the sanitary sewers as outlined, approximately **26,020** linear feet.
    h. GPS locate each identified defect and take a minimum of one digital photograph of each defect.

i. Upload and provide access to smoke testing data and photos on the web viewer Clarity®.

2. Dyed Water Flooding
   a. Provide equipment, personnel, and dye as necessary for dyed water flooding. Water to be provided by Village.
   b. Work with Village-provided televising staff or subcontractor to perform televising during dyed water flooding setups. **Subconsultant services are not included in this proposal, only coordination.**
   c. Set up and complete dyed water flooding as outlined, for up to **2 setups**. Document results with digital photographs of the dye test setup and if possible dyed water entering the sewer (where applicable).
   d. Locate each identified defect relative to segment manholes and take at least one digital photograph or video of each defect (where applicable).
   e. Upload and provide access to dyed water flooding data on the web viewer Clarity®.
3. Manhole Inspection
   a. Provide equipment and personnel as necessary for manhole inspections, up to **119** manholes.
   b. Use handheld electronic data collection equipment for collecting manhole inspection data.
   c. Complete surface manhole inspections for manholes as outlined. Collect the following attribute data, as it can be determined:
      i. Manhole diameter and material;
      ii. Connecting sewer diameters, invert measurements, and flow direction;
      iii. GPS data of the manhole x, y, and z coordinates.
   d. Identify and document manhole condition, including:
      i. Direct evidence of I/I;
      ii. Open pickholes in lid;
      iii. Cover, frame, adjusting ring, and seal condition, including needed adjustments;
      iv. Cone condition and defects;
      v. Wall condition and defects;
      vi. Trough and bench condition and defects; and
   e. Take a minimum of 3 digital photographs at each manhole structure
      i. Surrounding area;
      ii. Manhole cover; and
      iii. Topside - looking down;
   f. Take a 360-degree video at each structure using a remote camera to provide a 360-degree view of the entire structure.
   g. Upload and provide access to manhole inspection data and media on the web viewer Clarity®.
   h. Use data collected through field services to provide updates needed to the Village GIS database. Mapping updates may include:

i. Addition of structures located during field investigations;
ii. Updating of structure location;
iii. Removal of structures confirmed to not exist;
iv. Updating connectivity and flow direction.

i. Provide updates to Village GIS geodatabase in a data transfer with Village staff.
j. Coordinate with Village GIS staff for "check-in/check-out" procedures.
k. Assist the Village with incorporation of changes and information into Village GIS infrastructure and coordinate with other Village consultants on incorporation of GIS data.

4. CCTV Review
   a. Provide autocoding software and coordination for Village CCTV, up to **26,020** linear feet.
   b. Upload and provide access to CCTV data and videos on the web viewer Clarity®.
   c. Provide coordination with the Village's televising crew for areas to be televised and obtaining televising videos.
   d. Provide equipment and personnel as necessary for televising video QC.
   e. Review and QC the CCTV using PACP-certified personnel and PACP coding standards and edit as necessary.
5. Analysis and Report
   a. Provide data analysis as follows:
      i. Compile field data and develop complete list of defects.
      ii. Map results in GIS.
      iii. Assign an estimated flow to each defect; and
      iv. Determine a level of severity and/or preliminary rehabilitation method for each manhole, pipe, or identified defect;
      v. Create a summary of estimate cost.
      vi. Development of a detailed rehabilitation schedule is not included in the scope but can be added if requested by the Village.
   b. Organize data from individual field services into a comprehensive summary report.
   c. Provide the following information for the summary report:
      i. Summary of work completed;
      ii. Map(s) of inspections, defects, and SSES findings.
      iii. Summary of deficiencies observed, and preliminary recommendations developed.
      iv. List(s) and map(s) of preliminary rehabilitation recommended.
      v. Recommendations for follow-up SSES work.
   d. Provide digital copies of data, GIS geodatabases, and photographs.

D. Design and Bidding Engineering Services

1. Bode-00, 01, 02, and 03, SCHMWL-01, 02, 03, and 04, Kessel-01 High Priority Manhole Rehabilitation Design and Bidding:

a. Identify high priority manhole repairs, manholes assessed for rehabilitation from 2016, 2019, and 2021 inspections. Review recommended rehabilitation methods with Village to confirm use of the most effective approach, based on cost, location, I/I reduction, structural improvement, and Village standards.
b. Provide the following field checks:
    i. Identify surface restoration requirements (as applicable);
    ii. Identify potential traffic control needs during construction; and
    iii. QA/QC manhole recommendations
c. Prepare detailed schedules and bid tab for recommended manhole rehabilitation.
d. Prepare manhole rehabilitation exhibits to be included in the Bid Package, including the following:
    i. Manhole rehabilitation location exhibits; and
    ii. Project and Village specific Details & General Notes (if needed).
e. Prepare bid package with plans, schedules, Village front end bid documents, and detailed specifications. Prepare draft bidding documents for Village review.
f. Prepare an opinion of probable construction cost.
g. Bidding Assistance:
    i. Send advertisement to expected bidders;
    ii. Prepare Addenda;
    iii. Respond to Contractors' questions; and
    iv. Prepare letter of recommendation for award.

E. Construction Engineering Services

1. Small ACP (10" and under) Sanitary Sewer High Priority Lining Construction Management and Observation:
    a. Pre-Construction Assistance:
        i. Prepare Contract Documents for execution by Village and Contractor. Review Contractor's insurance documents.
        ii. Coordinate and attend preconstruction meeting. Prepare and distribute meeting minutes.
        iii. Review Contractor's shop drawings and other construction submittals, traffic control plans, pre-construction surface videos and construction phasing.
    b. Ensure contractor provides notification to the residents of impacts to sewer service and access to driveways.
    c. Provide a combination of full and part-time construction observation for the duration of the project. RJN proposes to be on-site full time when the point repairs are completed. Part-time observation will be provided for restoration, manhole rehab, and lining. Part-time supervision will be approximately four hours per day, when the Contractor is onsite and working. This proposal is

based on providing a total of 340 hours of full and part-time construction observation services.

d. Provide daily documentation of the construction activities when on-site, including maintaining a daily project journal, taking digital photographs of all phases of the project, and taking measurements for all quantities installed. RJN will provide access of daily reports to the Village for review via Clarity®, the RJN online platform.
e. Provide periodic inspection of traffic control measures to ensure roadways remain open and driveways/sidewalks are not blocked for extended periods. Identify potential traffic control and surface rehabilitation needs during construction, observe construction phase J.U.L.I.E. locates and identify potential utility conflicts for locations requiring excavation.
f. Alert the Contractor if equipment or materials are being installed prior to material submittal approval or if the wrong materials are being used. Provide field checks of materials and equipment, including enforcement of material testing.
g. Inspect each manhole and surrounding area during and after construction, to ensure no damage has occurred. This includes the final walk through, preparation of punch list, and final inspection.
h. Provide observation services during construction testing where applicable. Review testing documentation submittals for compliance with plans and specifications. Prepare a preliminary and final punchlist. Submit to the Village for review and incorporate Village's comments. Submit to Contractor for completion.
i. Provide personnel as necessary for pre/post rehab televising video review. Review sewer televising videos using PACP-certified personnel. Identify work completed that is in compliance with the Contract Documents and any deficiencies in the final work product.
j. Provide general project management and coordinate meetings with Village and Contractor as agreed upon at preconstruction meeting. Coordinate project with the Village, and Contractor, including updates on progress. Provide contract management, including review of Contractor's payment requests, preparation of change orders, coordination of contract closeout and preparation of a final acceptance letter.
k. Obtain as-built documents from the Contractor and prepare for the Village a set of final construction documents in original AutoCAD or GIS formats. Obtain project specific rehabilitation changes to the Village's collection system and provide to the Village for inclusion in their GIS. Prepare a GIS layer update of the rehabilitation work and rehabilitation locations.
l. Prepare and provide record drawings from the contractor's as-built plans.

F. **North Braintree Post High Priority Rehabilitation Flow Monitoring**

Six (6) Village owned flow monitors and two (2) RJN rain gauges were installed in fiscal year 2025/26. The data collection and analysis of the flow monitoring is part of this project and is outlined as follows:

1. Provide meter and rain gauge maintenance as necessary to keep equipment in proper operation for the duration of the monitoring period.
2. Perform a total of five calibration measurements during the flow monitoring period.
3. Procure spare parts and replacement equipment, such as batteries, and desiccants, as needed to keep meters and rain gauges working and within operating standards. Meter and sensor replacement is not included for Village-owned meters.
4. Perform final calibration measurements at each site and remove the flow meters and rain gauges. Clean and return Village-owner flow meter equipment.
5. Upload and provide access to flow monitoring data and photos on the web viewer Clarity®
6. Process the collected raw data. Analyze the processed data for wet- and dry-weather flow patterns. Create hydrographs for each meter and determine wet-weather peaking factors at standard storm recurrence and durations for each basin.
7. Perform an inflow and infiltration analysis, including:
    a. Inflow peaking factors
    b. Regression analysis for peaking factor prediction
    c. Scattergraphs and hydrographs
    d. Capacity analysis including downstream control and surcharging assessment
    e. Post rehabilitation I/I mitigation assessment
8. Provide the following information for the summary report:
    a. Details on each meter and rain gauge location
    b. Summary of the flow and rainfall data collected
    c. Conclusions from the flow metering, including evidence of downstream control, hydraulic bottlenecks, levels of infiltration and inflow (I/I), and a comparison to historical I/I analysis.
    d. Adequacy of the existing system to handle existing flows
    e. Recommendations for the next appropriate steps including reduction in I/I
9. Provide digital copies of data, GIS geodatabases, and photographs.

Items Requested from the Village

1. Access to structures for inspection. Assistance locating or opening seized/buried manholes as required. Assist RJN to access backyards when necessary.
2. Assistance with traffic control in high traffic areas, as necessary.
3. Sewer televising for CCTV review and during Dyed Water Flooding inspections and submittal of videos and reports
4. Water for Dyed Water Flooding inspections.
5. Upload into autocoding software "usable" CCTV of sanitary sewers.

6. Tree removals, as necessary, prior to the point repair work.
7. Help coordinating and communicating with all project stakeholders and residents.
8. Provide GIS data as necessary.
9. Review and comment on prepared bidding documents including any project specific modifications for this project.
10. Publish construction bid using the Village's standard procurement procedures.
11. Coordination with RJN in answering bid-related questions in formal addenda.

EXHIBIT B
PRICING

Pricing for the FY 2026/2027 IICP Services project is as follows.

Pricing Terms for Invoicing: Time and Materials, Unit Price

Not-To-Exceed Total Cost: $406,572

Task #	Task Description	Units	Quantity	Hours / Cost/Unit	Cost
1000	MWRD IICP Annual Reporting			85	$ 14,000.00
1001	Long-term requirements annual summary report			22	$ 3,310.00
1002	High priority deficiency form			11	$ 1,820.00
1003	CIP Planning			14	$ 2,278.00
1004	Prioritization/activity map updates			13	$ 1,861.00
1005	2025/26 program management services			25	$ 4,731.00
2000	SSES of Meter Basins Bode-04 and WL-05			543	$ 89,353.00
2001	Smoke Testing (26,020 linear feet) and Recommendations			245	$ 31,877.00
2002	Dyed Water Flooding and Recommendations (2 setups)			40	$ 5,335.00
2003	Manhole Inspection (119 manholes), Survey, and Recommendations			141	$ 18,540.00
2004	CCTV Autocode/QC and Recommendations (26,020 linear feet)			46	$ 16,583.00
2005	Final Analysis and Draft/Final Report			71	$ 11,416.00
2006	Direct Costs (Equipment, Mailings, Mileage, Etc...)			-	$ 5,602.00
3000	Rehabilitation Design - Manholes			688	$ 113,503.00
3001	Bode-00, 01, 02, 03			262	$ 42,964.00
3002	SCHWL-01, 02, 03, 04			262	$ 42,964.00
3003	Kessel-01			126	$ 20,703.00
3004	Manhole Rehab Bidding Services			38	$ 6,872.00
4000	Construction Management and Observation			801	$ 144,916.00
4001	ACP (10" and Under) HP Lining			801	$ 141,074.00
4002	Direct Costs (mileage)			-	$ 3,842.00
	TOTAL T&M			**2117**	**$ 361,772.00**
5000	Flow Monitoring	Units	Quantity	Cost/Unit	$ 44,800.00
5001	Meter/RG Cals, Maint, and Data Review (4-months)	Me-Mo	24	$ 1,050.00	$ 25,200.00
5002	Meter Removal and Return, Finalization	Meter	6	$ 1,350.00	$ 8,100.00
5003	Analysis and Reporting	LS	1	$11,500.00	$ 11,500.00
	TOTAL UNIT PRICE				**$ 44,800.00**
	TOTAL CONTRACT AMOUNT				**$ 406,572.00**

Hourly Rate Schedule

	Classification	2026 Rates*
PD	Project Director	$270.00
SPM	Senior Project Manager	$240.00
PM	Project Manager	$205.00
SCM	Sr. Construction Manager	$185.00
CM	Construction Manager	$170.00
CO	Construction Observer	$150.00
SPE	Senior Project Engineer	$175.00
PE	Project Engineer	$160.00
EI	Engineer I	$145.00
GSS	GIS Specialist	$140.00
GIS	GIS Analyst	$120.00
SDA	Senior Data Analyst	$140.00
DA	Data Analyst	$120.00
FM	Field Manager	$125.00
FS	Field Supervisor	$115.00
FT	Field Technician	$105.00
AS	Administrative Support	$115.00
	**Rates valid through 12/31/2026 and are subject to an annual increase.*	

Notes

- The Hourly Rate Schedule is valid until April 30, 2027. Following that date, rates may be subject to an annual increase.

Contract Option

This contract can be amended to include additional work upon joint approval by the Village and RJN.

EXHIBIT C
PROPOSED SCHEDULE

RJN is prepared to start work immediately upon an Agreement. The schedule for this project is summarized as follows:

Task	Timeline
MWRD Annual Reporting	Submit draft of MWRD submittal by February 17, 2027, with submittal to MWRD by **March 1, 2027** deadline.
SSES of BODE-04 and WL-05	Planning will begin upon NTP, with all SSES activities and reporting expected to be complete by **February 2027**.
Rehabilitation Design and Bidding	Design shall be completed by **March 2027 while** Bidding will start in **April of 2027**.
Construction Management and Observation	Pending plan review by the Village, construction is expected to begin in **June of 2026**.
Flow Monitoring North Braintree	Flow monitors are installed and reporting is expected by **October 2026**

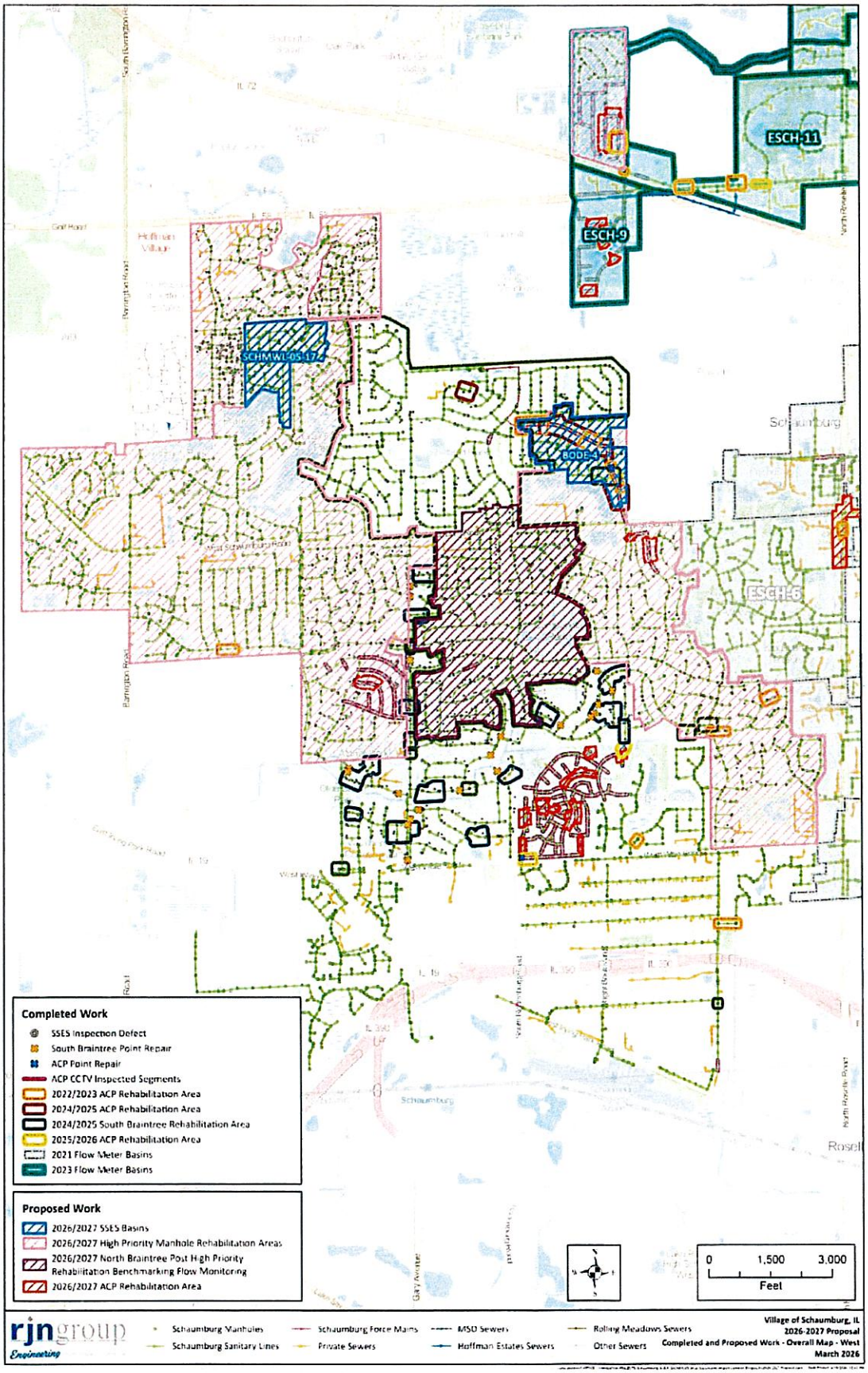
ESCH-11
ESCH-9
SCHMWL05-17A
BODE-1
ESCH-6
Completed Work
SSES Inspection Defect
South Braintree Point Repair
ACP Point Repair
ACP CCTV Inspected Segments
2022/2023 ACP Rehabilitation Area
2024/2025 ACP Rehabilitation Area
2024/2025 South Braintree Rehabilitation Area
2025/2026 ACP Rehabilitation Area
2021 Flow Meter Basins
2023 Flow Meter Basins
Proposed Work
2026/2027 SSES Basins
2026/2027 High Priority Manhole Rehabilitation Areas
2026/2027 North Braintree Post High Priority Rehabilitation Benchmarking Flow Monitoring
2026/2027 ACP Rehabilitation Area
0
1,500
3,000
Feet
rjngroup Engineering
Schaumburg Manholes
Schaumburg Sanitary Lines
Schaumburg Force Mains
Private Sewers
MSD Sewers
Hoffman Estates Sewers
Rolling Meadows Sewers
Other Sewers
Village of Schaumburg, IL
2026-2027 Proposal
Completed and Proposed Work - Overall Map - West
March 2026

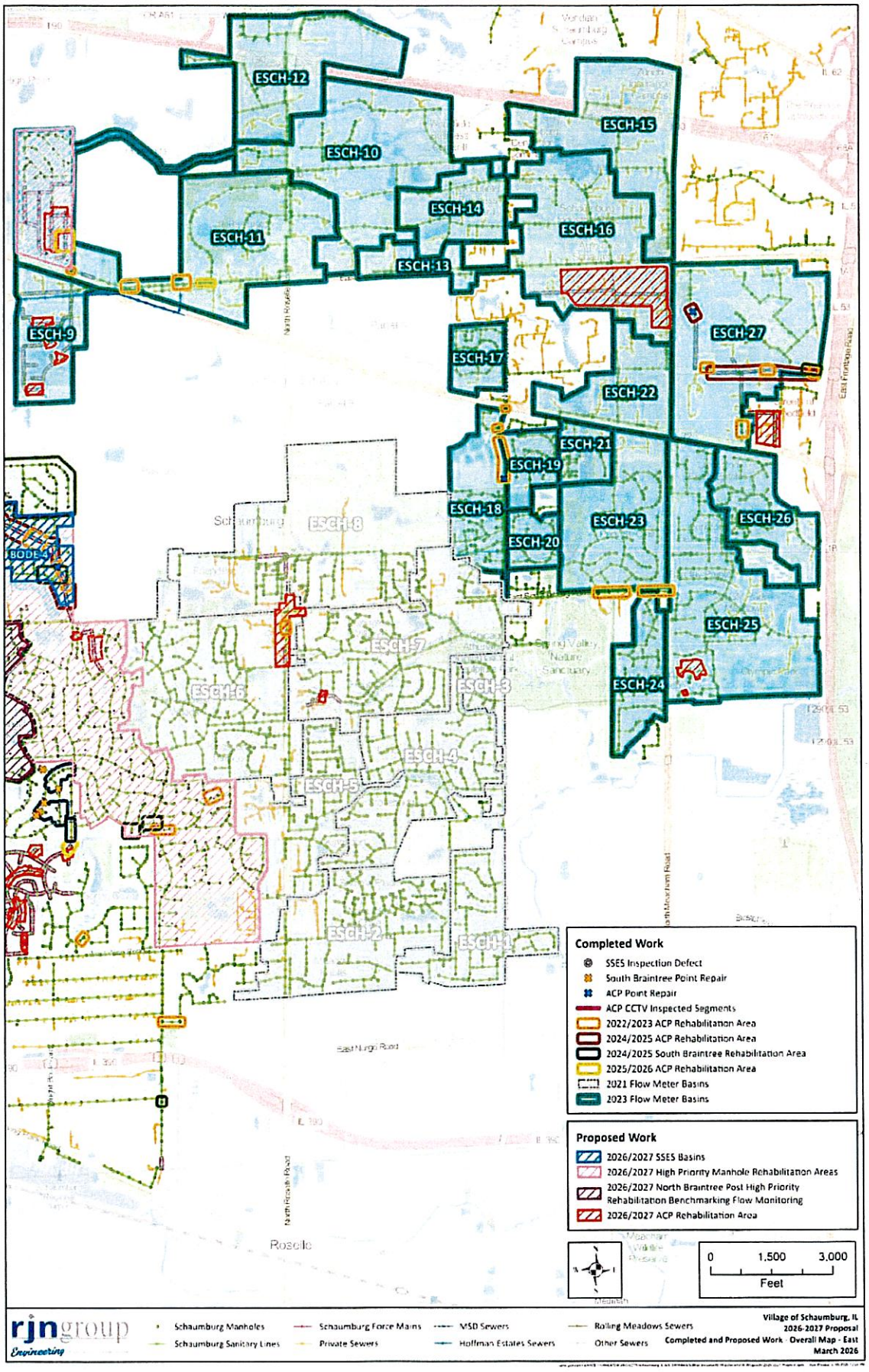
ESCH-12
ESCH-10
ESCH-11
ESCH-14
ESCH-13
ESCH-15
ESCH-16
ESCH-9
ESCH-17
ESCH-27
ESCH-22
ESCH-21
ESCH-19
ESCH-18
ESCH-23
ESCH-26
ESCH-20
ESCH-25
ESCH-24
ESCH-8
ESCH-7
ESCH-6
ESCH-3
ESCH-4
ESCH-5
ESCH-2
ESCH-1
BODE-1
Schaumburg
Roselle
East Nuge Road
North Roselle Road
North Meacham Road
East Frontage Road
Spring Valley Nature Sanctuary
Completed Work
SSES Inspection Defect
South Braintree Point Repair
ACP Point Repair
ACP CCTV Inspected Segments
2022/2023 ACP Rehabilitation Area
2024/2025 ACP Rehabilitation Area
2024/2025 South Braintree Rehabilitation Area
2025/2026 ACP Rehabilitation Area
2021 Flow Meter Basins
2023 Flow Meter Basins
Proposed Work
2026/2027 SSES Basins
2026/2027 High Priority Manhole Rehabilitation Areas
2026/2027 North Braintree Post High Priority Rehabilitation Benchmarking Flow Monitoring
2026/2027 ACP Rehabilitation Area
0
1,500
3,000
Feet
rjngroup Engineering
Schaumburg Manholes
Schaumburg Sanitary Lines
Schaumburg Force Mains
Private Sewers
MSD Sewers
Hoffman Estates Sewers
Rolling Meadows Sewers
Other Sewers
Village of Schaumburg, IL
2026-2027 Proposal
Completed and Proposed Work - Overall Map - East
March 2026

EXHIBIT2

INSURANCE COVERAGES

A. Worker's Compensation and Employer's Liability with limits not less than:

(1) Worker's Compensation: Statutory;

(2) Employer's Liability:

$500,000 injury-per occurrence

$500,000 disease-per employee

$500,000 disease-policy limit

Such insurance shall evidence that coverage applies in the State of Illinois.

B. Comprehensive Motor Vehicle Liability with a combined single limit of liability for bodily injury and property damage of not less than $1,000,000 for vehicles owned, non-owned, borrowed or rented.

All employees shall be included as insureds.

C. Comprehensive General Liability with coverage written on an "occurrence" basis and with limits no less than:

$1,000,000 Bodily Injury and Property Damage $2,000,000 Aggregate

Coverages shall include:

Broad Form Property Damage Endorsement

Broad Form Contractual Liability (must expressly cover the indemnity provisions of the Contract)

D. Umbrella Policy or Excess liability Insurance with a limit of liability of not less than $2,000,000.

The required coverages may be in any combination of primary, excess, and umbrella policies. Any excess or umbrella policy must provide excess coverage over underlying insurance, except professional liability, on a following-form basis such that when any loss covered by the primary policy exceeds the limits under the primary policy, the excess or umbrella policy becomes effective to cover such loss.

E. Professional Liability Insurance. With a limit of liability of not less than $1,000,000 per claim/$2,000,000 in the aggregate and covering Consultant against all sums that Consultant may be obligated to pay on account of any liability arising out deviation from the professional standard of care set forth in the Agreement. If the policy is a claims made policy, it shall remain in effect for 5 years after the work has been completed.

F. Village as Additional Insured. Village shall be named as an Additional Insured on all policies except for:

Worker's Compensation

Professional Liability

Each such additional Insured endorsement shall identify Village as follows: Village of Schaumburg, including its Board members and elected and appointed officials, its officers, and employees.

G. Other Parties as Additional Insureds. In addition to Village, the following parties shall be named as additional insured on the following policies:

Additional Insured	Policy or Policies
_____	_____
_____	_____

The Consultant will provide certificates of insurance evidencing the types and limits of insurance specified. The certificates of insurance will specifically address each of the requirements noted. All insurance noted is primary and in no event will be considered contributory to any insurance purchased by the Village.

The same full insurance coverage provided to the named insured, whether it is the Consultant or a sub-contractor, shall be provided to the Village without any limitations or endorsements that might limit or exclude coverage.

Any and all deductibles or other forms of retention are the responsibility of the Consultant. All deductibles or other forms of retention are subject to the approval of the Village. Consultant will disclose to the Village in writing the amounts of any deductible or self-insured retentions on the insurance required under this contract.

Consultant waives any right of subrogation it may have or later acquire against the Village.

The Consultant shall not allow any subcontractor to commence work on their subcontract until the same insurance has been obtained by the subcontractor. The Consultant and their subcontractor(s) shall maintain all insurance required for not less than one (1) year after completion of this contract except professional liability which shall be for 5 years.

VILLAGE OF SCHAUMBURG

AGENDA ITEM SUMMARY

Resolution No. R-26-_____A Resolution to Utilize Motor Fuel Funds in Accordance with the Illinois Department of Transportation Resolution for Maintenance of Streets and Highways by Schaumburg Under the Illinois Highway Code (2026-2027).

04/14/26
Village Board

Presenter: Justin Briski, Superintendent of Field Services
Lead Department: Engineering and Public Works

Executive Summary:

The Illinois Motor Fuel Tax (MFT) Fund is derived from a tax on the privilege of operating motor vehicles upon public highways based on the consumption of motor fuel. The Illinois Department of Transportation (IDOT) allocates these monies according to the provisions outlined in the MFT fund distribution statute, 35 ILCS 505/8, and initiates the process for distribution of motor fuel tax to the counties, townships, and municipalities.

The expenditure of MFT funds requires the approval and supervision of IDOT. The corporate authorities of the municipality must adopt an ordinance or a resolution appropriating the MFT funds. The ordinance or resolution shall state how the funds will be used and shall be submitted to the appropriate IDOT District Office for approval. Staff utilizes MFT funds for maintenance operations, salaries, benefits and equipment usage for MFT eligible tasks including inhouse paving and snow and ice operations. These adjustments offset general fund expenditures to ultimately fund the local road construction program. MFT funds are also used for various road construction projects. The estimate of municipal maintenance expenditures for FY 26/27 is $1,801,129.82.

Attached is the IDOT Resolution of Maintenance of Streets and Highways by Municipality. Under the Illinois Highway Code, the spreadsheet itemizing the recommended maintenance costs for MFT funding, and the Village Resolution.

Recommended Action:

The Village Manager recommends the Engineering and Public Works Committee recommend the Village Board approve the Resolution to Utilize Motor Fuel Tax funds in accordance with the Illinois Department of Transportation Resolution for Maintenance of Streets and Highways by Schaumburg under the Illinois Highway Code (2026-2027).

ATTACHMENTS:
- VOS Resolution
- IDOT Resolution
- Estimate of Maintenance Costs

RESOLUTION NO. R-26-_____

RESOLUTION TO UTILIZE MOTOR FUEL FUNDS IN ACCORDANCE WITH THE ILLINOIS DEPARTMENT OF TRANSPORTATION RESOLUTION FOR MAINTENANCE OF STREETS AND HIGHWAYS BY SCHAUMBURG UNDER THE ILLINOIS HIGHWAY CODE (2026-2027)

WHEREAS, The President and Board of Trustees of the Village of Schaumburg deem it necessary to appropriate the sum of $1,801,129.82 of Motor Fuel Tax Funds for the purpose of maintaining streets and highways under the applicable provisions of the Illinois Highway Code from (May 1, 2026) to (April 30, 2027) described in the attached Exhibit A; and

WHEREAS, it will be in the best interest of the citizens of Schaumburg to do said work;

NOW, THEREFORE, BE IT RESOLVED BY THE PRESIDENT AND BOARD OF TRUSTEES OF THE VILLAGE OF SCHAUMBURG:

SECTION ONE: That the above be incorporated as official findings of the Village of Schaumburg Board of Trustees.

SECTION TWO: That there is hereby appropriated/budgeted the sum of one million, eight hundred one thousand, one hundred twenty-nine and eighty-two hundredths ($1,801,129.82) for the improvement and maintenance of streets and highways and the expenditure of said amount is hereby authorized from the Village's allotment of motor fuel tax funds.

SECTION THREE: That the Village Manager and Village Clerk be and hereby are authorized to sign the IDOT Resolution, Exhibit "A", and any documents in furtherance of this Resolution.

SECTION FOUR: That the Village Clerk is hereby directed to transmit two certified copies of this Resolution to the District Office of the Department of Transportation.

SECTION FIVE: This Resolution shall be in full force and effect after passage and approval by required by law.

AYES:
NAYS:
ABSENT:

PASSED AND APPROVED this _____ day of _____, 2026.

_____
Village President

ATTEST:

_____
Village Clerk

Illinois Department of Transportation

Resolution for Maintenance Under the Illinois Highway Code

District	County	Resolution Number	Resolution Type	Section Number
1	Cook		Original	27-00000-00-GM

BE IT RESOLVED, by the President and Board of Trustees (Governing Body Type) of the Village (Local Public Agency Type) of Schaumburg (Name of Local Public Agency) Illinois that there is hereby appropriated the sum of one million, eight hundred one thousand, one hundred twenty-nine and eighty-two hundredths Dollars ($1,801,129.82) of Motor Fuel Tax funds for the purpose of maintaining streets and highways under the applicable provisions of Illinois Highway Code from 05/01/26 (Beginning Date) to 04/30/27 (Ending Date).

BE IT FURTHER RESOLVED, that only those operations as listed and described on the approved Estimate of Maintenance Costs, including supplemental or revised estimates approved in connection with this resolution, are eligible for maintenance with Motor Fuel Tax funds during the period as specified above.

BE IT FURTHER RESOLVED, that Village (Local Public Agency Type) of Schaumburg (Name of Local Public Agency) shall submit within three months after the end of the maintenance period as stated above, to the Department of Transportation, on forms available from the Department, a certified statement showing expenditures and the balances remaining in the funds authorized for expenditure by the Department under this appropriation, and

BE IT FURTHER RESOLVED, that the Clerk is hereby directed to transmit four (4) certified originals of this resolution to the district office of the Department of Transportation.

I _____ (Name of Clerk) Village (Local Public Agency Type) Clerk in and for said Village (Local Public Agency Type) of Schaumburg (Name of Local Public Agency) in the State of Illinois, and keeper of the records and files thereof, as provided by statute, do hereby certify the foregoing to be a true, perfect and complete copy of a resolution adopted by the President and Board of Trustees (Governing Body Type) of Schaumburg (Name of Local Public Agency) at a meeting held on _____ (Date).

IN TESTIMONY WHEREOF, I have hereunto set my hand and seal this _____ (Day) day of _____ (Month, Year).

(SEAL, if required by the LPA)

Clerk Signature & Date

APPROVED

Regional Engineer Signature & Date
Department of Transportation

Instructions for BLR 14220

This form shall be used when a Local Public Agency (LPA) wants to perform maintenance operations using Motor Fuel Tax (MFT) funds. Refer to Chapter 14 of the Bureau of Local Roads and Streets Manual (BLRS Manual) for more detailed information. This form is to be used by a Municipality or a County. Road Districts will use BLR 14221. For signature requirements refer to Chapter 2, Section 3.05(b) of the BLRS Manual.

When filling out this form electronically, once a field is initially completed, fields requiring the same information will be auto-populated.

Resolution Number	Insert the resolution number as assigned by the LPA, if applicable.
Resolution Type	From the drop down box, choose the type of resolution: -Original would be used when passing a resolution for the first time for this project. -Supplemental would be used when passing a resolution increasing appropriation above previously passed resolutions. -Amended would be used when a previously passed resolution is being amended.
Section Number	Insert the section number of the improvement covered by the resolution.
Governing Body Type	From the drop down box choose the type of administrative body. Choose Board for County; Council or President and Board of Trustees for a City, Village or Town.
LPA Type	From the drop down box choose the LPA body type; County, City, Town or Village.
Name of LPA	Insert the name of the LPA.
Resolution Amount	Insert the dollar value of the resolution for maintenance to be paid for with MFT funds in words, followed by the same amount in numerical format in the ().
Beginning Date	Insert the beginning date of the maintenance period. Maintenance periods must be a 12 or 24 month consecutive period.
Ending Date	Insert the ending date of the maintenance period.
LPA Type	From the drop down box choose the LPA body type; County, City, Town or Village.
Name of LPA	Insert the name of the LPA.
Name of Clerk	Insert the name of the LPA Clerk.
LPA Type	From the drop down box choose the LPA body type; County, City, Town or Village.
LPA Type	From the drop down box choose the LPA body type; County, City, Town or Village.
Name of LPA	Insert the name of the LPA.
Governing Body Type	From the drop down box choose the type of administrative body. Choose Board for County; Council or President and Board of Trustees for a City, Village or Town.
Name of LPA	Insert the name of the LPA.
Date	Insert the date of the meeting.
Day	Insert the day the Clerk signed the document.
Month, Year	Insert the month and year of the clerk's signature.
Clerk Signature	Clerk shall sign here.
Seal	The Clerk shall seal the document here, if required. If a seal is required, electronic signatures should not be used.
Approved	The Department of Transportation representative shall sign and date here upon approval.

A minimum of three (3) certified signed originals must be submitted to the Regional Engineer's District office OR email PDF completed form with electronic signatures to your local District LRS office.

Following IDOT's approval, distribution will be as follows:

Local Public Agency Clerk
Engineer (Municipal, Consultant or County)

Illinois Department of Transportation

Local Public Agency General Maintenance

Estimate of Maintenance Costs

Submittal Type: Original

District	Estimate of Cost For
1	Municipality

Local Public Agency	County	Section Number	Maintenance Period Beginning	Ending
Village of Schaumburg	Cook	27-00000-00-GM	05/01/26	04/30/27

Maintenance Items

Maintenance Operation	Maint Eng Category	Insp. Req.	Material Categories/ Point of Delivery or Work Performed by an Outside Contractor	Unit	Quantity	Unit Cost	Cost	Total Maintenance Operation Cost
Snow Removal - Bulk Salt - Dupage	I	No	Point of Delivery	Tons	6,054	$74.33	$449,993.82	$449,993.82
Energy - Street Lights and Signals	I	No	Point of Delivery	LS		$206,636.00	$0.00	$206,636.00
Snow and Ice Removal - LPA Labor	IIA	No	LPA Labor	HR		$600,000.00	$0.00	$600,000.00
Street Sign Maintenance - LPA Labor	IIA	No	LPA Labor	HR		$66,000.00	$0.00	$66,000.00
Street Maintenance - Pavement Work - LPA Labor	IIA	No	LPA Labor	HR		$140,000.00	$0.00	$140,000.00
Street Sweeping - LPA Labor	IIA	No	LPA Labor	HR		$3,500.00	$0.00	$3,500.00
Lights and Signals - LPA Labor	IIA	No	LPA Labor	HR		$35,000.00	$0.00	$35,000.00
Snow and Ice Removal - LPA Equipment	IIA	No	LPA Equipment	LS		$75,000.00	$0.00	$75,000.00
Street Sign Maintenance - LPA Equipment	IIA	No	LPA Equipment	LS		$45,000.00	$0.00	$45,000.00
Street Maintenance - Pavement Work - LPA Equipment	IIA	No	LPA Equipment	LS		$150,000.00	$0.00	$150,000.00
Street Sweeping - LPA Equipment	IIA	No	LPA Equipment	LS		$5,000.00	$0.00	$5,000.00
Lights and Signals - LPA Equipment	IIA	No	LPA Equipment	LS		$25,000.00	$0.00	$25,000.00
							Total Operation Cost	$1,801,129.82

Estimate of Maintenance Costs

Submittal Type: Original

Local Public Agency	County	Section	Maintenance Period Beginning	Ending
Village of Schaumburg	Cook	27-00000-00-GM	05/01/26	04/30/27

Estimate of Maintenance Costs Summary

Maintenance	MFT Funds	RBI Funds	Other Funds	Estimated Costs
Local Public Agency Labor	$844,500.00			$844,500.00
Local Public Agency Equipment	$300,000.00			$300,000.00
Materials/Contracts(Non Bid Items)	$206,636.00			$206,636.00
Materials/Deliver & Install/Materials Quotations (Bid Items)	$449,993.82			$449,993.82
Formal Contract (Bid Items)	$0.00			$0.00
Maintenance Total	$1,801,129.82			$1,801,129.82

Estimated Maintenance Eng Costs Summary

Maintenance Engineering	MFT Funds	RBI Funds	Other Funds	Total Est Costs
Preliminary Engineering				
Engineering Inspection				
Material Testing				
Advertising				
Bridge Inspection Engineering				
Maintenance Engineering Total				
Total Estimated Maintenance	$1,801,129.82			$1,801,129.82

Remarks

SUBMITTED

Local Public Agency Official Signature & Date

Title

County Engineer/Superintendent of Highways Signature & Date

APPROVED

Regional Engineer Signature & Date
Department of Transportation

IDOT Department Use Only

Received Location | Received Date | Additional Location? ☐

WMFT Entry By | Entry Date

NOTE: Form instructions should not be included when the form is submitted

This form is used by all Local Public Agencies (LPAs) to submit their maintenance program and also submit their maintenance expenditure statements. A resolution (BLR 14220) must be submitted and approved by the Illinois Department of Transportation (IDOT) prior to incurring any expenditures. For items required to be bid the estimate of cost must be submitted prior to submittal of required bidding documents. Authorizations will be made based on the resolution and/or the approved contract/acceptance/material quotations documents.

The maintenance expenditure statement must be submitted within 3 months of the end of the maintenance period. Maintenance resolutions and estimates submitted for future maintenance periods after that date will not be processed until the delinquent maintenance expenditure statement has been submitted. Only one form needs to be completed per maintenance period, combine all operations on one form.

For additional information refer to the Bureau of Local Roads Manual (BLRS), Chapter 14. For signature requirements refer to Chapter 2, section 3.05(b) of the BLRS Manual.

For items being completed for the estimate all materials, equipment, labor and contract amounts are considered estimates. For estimates where LPA equipment is completed, an Equipment Rental Schedule (BLR 12110) must also be submitted for approval. When completing the form for the Maintenance Expenditure all items must be actual amounts spent.

Maintenance — From the drop down choose which type of document is being submitted. Choose Estimate of Cost if an estimate is being submitted, choose Maintenance Expenditure Statement if a maintenance expenditure statement is being submitted

Submittal — Choose the type of submittal, if this is the first submittal choose original, if revising a previous submittal choose, revised. If adding to a previous submittal choose supplemental.

Estimate of Cost For — Select the type of LPA submitting this form from the drop down. Types to choose are County, Municipality, or Road District/Township.

Local Public Agency — Insert the name of the Local Public Agency.

County — Insert the County in which the Local Public Agency is located.

Maintenance Period

Beginning — Insert the beginning date of the maintenance period.

Ending — Insert the ending date of the maintenance period.

Section — Insert the section number assigned to this project. The letters at the end of the section number will always be a "GM".

Maintenance Operations — List each maintenance operation separately

Maintenance Eng. Category — From the drop down choose the maintenance engineering category as it applies to the operation listed to the left. The definitions of the categories can be found in the BLRS Manual Chapter 14, section 14-2.04

Maintenance Engineering Categories are:

Category I — Services purchased without a proposal such as electric energy or materials purchased from Central Management Services' Joint Purchasing Program or another joint purchasing program that has been approved by the District BLRS or CBLRS.

Category II-A — Maintenance items that are not included in Maintenance Engineering Category I or do not require competitive sealed bids according to Section 12-1.02(a) or a local ordinance/resolution.

Category II-B — Routine maintenance items that require competitive sealed bids according to Section12-1.02(a) or a local ordinance/ resolution. Routine maintenance includes all items in the following work categories: snow removal, street sweeping, lighting and traffic signal maintenance, cleaning ditches or drainage structures, tree trimming or removal, mowing, crack sealing, pavement marking, shoulder maintenance limited amounts of concrete curb and gutter repair, scour mitigation, pavement patching, and minor drainage repairs.

Category III — Maintenance items that are not covered by Maintenance Engineering Category I or Category II-B and require competitive bidding with a material proposal, a deliver and install proposal or material quotation.

Category IV — Maintenance items that are not covered by Maintenance Engineering Category I or Category II-B and require competitive bidding with a formal contract proposal.

The instructions listed below only apply to the maintenance estimate of cost. For LPA's using Local Public Agency Labor and/or Local Public Agency Equipment Rental, the estimated amounts are only listed on those specific lines and are not to be included with each operation on the estimate of cost.

Insp Req — From the drop down choose No or Yes as it applies to the maintenance operation listed to the left. Items requiring no engineering inspection should be no.

Material Categories/Point of Delivery or Work Performed by an Outside Contractor — List the items for each operation on a separate line, grouping items for the same operation together, for the operation listed to the left. If work being done as a contract list work by contractor.

Unit — Insert the unit of measure for the material listed to the left, if applicable.

Quantity — Insert the quantity for the material listed to the left, if applicable.

Unit Cost — Insert the unit cost of the material listed to the left, if applicable.

Cost — No entry necessary, this is a calculated field. This is the quantity times the unit cost.

Total Maintenance Operation Cost — Insert the total of the Maintenance Operation Cost, for items done by a contract insert the estimated contract amount.

Maintenance

Estimate of Maintenance Costs Summary — Under each item listed below, list the amount of estimated MFT funds, Rebuild Illinois (RBI) funds and local funds to be expended, if applicable. The total Estimated cost is a calculated field.

Local Public Agency Labor — Insert the estimated amount for LPA labor for all maintenance operations, if applicable.

Local Public Agency Equipment Rental — Insert the estimated amount for LPA equipment rental for all maintenance operations, if applicable.

Materials/Contracts (Non Bid Items) — Insert the estimated amount for materials and/or contracts for items the LPA is not required to bid, if applicable.

Materials/Deliver & Install, Material Quotations — For the operation listed to the left insert the estimate amount to be expended using a bidding process for material/deliver & install proposal and/or material quotations, if applicable.

Formal Contracts — Insert the total amount estimated to be expended on formal contracts. This will be for items required to be bid.

Total Estimated Cost — This is a calculated field and will be automatically filled in for each type. This is the sum of all funding for the item.

Total Maintenance Operation Cost — This is a calculated field, no entry is necessary. This is the sum of all items estimated to be expended on this operation.

Total Maintenance Cost — This is a calculated field, no entry is necessary. This is the sum of all maintenance operation costs.

Maintenance Engineering Cost Summary — For each item listed below, list under the funding type what the estimated amount to be expended for each item.

Preliminary Engineering Fee — Insert the amount of funds estimated to be expended for Preliminary Engineering, if applicable.

Engineering Inspection Fee — Insert the amount of funds estimated to be expended for Engineering Inspection, if applicable.

Material Testing Costs — Insert the dollar amount of funds estimated to be expended on material testing costs, if applicable.

Advertising Costs — Insert the amount of funds estimated to be expended on advertising costs, if applicable.

Bridge Inspection Costs — Insert the amount of funds estimated to be expended on bridge inspection costs, if applicable.

Total Maintenance Engineering — This is a calculated field, no entry is necessary. This is the sum of all maintenance engineering costs listed above.

Totals — This is a calculated field. It is the total of the estimated maintenance cost plus the estimated maintenance engineering cost.

These instructions apply to the Maintenance Expenditure Statement.

Maintenance Operation — Type in the name of the maintenance operation for which the amounts to the right will be completed. For a form that was completed as an Estimate of Cost and is now being changed to a Maintenance Expenditure Statement, this field will be completed from the estimate.

Maint Eng Category — From the drop down select the Maintenance Engineering Category that applies to the operation listed to the left.

LPA Labor — For the operation listed to the left insert the amount expended for LPA labor, if applicable.

LPA Equipment Rental — For the operation listed to the left insert the amount expended on LPA equipment rental if applicable.

Materials/Contracts (Non-Bid) — For the operation listed to the left insert the amount expended for materials and/or contracts that was not required to be bid, if applicable.

Materials/Deliver & Install/Material Quotations (Bid Items) — Insert the total amount expended on Materials Proposals, Deliver and Install proposals, Materials Quotations (Bid Items). This will be for items that were required to be bid.

Formal Contract — For the operation listed to the left insert the amount expended for items bid using the formal contract process, if applicable.

Total Operation Cost — This is a calculated field, it will sum the amounts expended for the operation listed to the left.

Operation Engineering Inspection Fee — For the operation listed to the left insert the amount of engineering inspection charged for this operation, if applicable.

Total Maintenance — This is a calculated field, no entry necessary. It is the sum of all maintenance operations.

Maintenance Engineering Cost Summary Preliminary Engineering Fee — Insert the dollar amount of funds spent on preliminary engineering for this maintenance section.

Engineering Inspection Fee — Insert the amount of funds expended for Engineering Inspection, if applicable.

Material Testing Costs — Insert the dollar amount of funds spent on material testing costs, if applicable.

Advertising Costs — Insert the dollar amount of funds spent on advertising costs, if applicable.

Bridge Inspection Costs — Insert the dollar amount of funds spent on bridge inspection costs, if applicable.

Total Maintenance Engineering — This is a calculated field, no entry is necessary. This is the sum of all maintenance engineering costs listed above.

Total Maintenance Program Costs — Insert the total cost of the Maintenance and Maint. Engineering. The maintenance amount will be the amount from the Total Cost from the Maintenance Items table. The Maint. Eng will be the Maintenance Engineering Total from above.

Contributions, Refunds, Paid with Other Funds — Enter the dollar amount of contributions, refunds or amounts paid with other funds for this maintenance section, if applicable, for both maintenance and maintenance engineering.

Total Motor Fuel Tax/Rebuild Illinois Portion — These are calculated fields, no entry is necessary. This is the sum of the total cost minus the amount paid with local funds.

Motor Fuel Tax Portion — Insert the amount of the total cost that was paid for with Motor Fuel Tax funds for Maintenance and Maint. Engineering, as applicable.

Motor Fuel Tax Funds Authorized — Insert the net amount of Motor Fuel Tax Funds authorized for each type.

Motor Fuel Tax Surplus/Deficit — These are calculated fields, no entry is necessary. This is the sum of the Total Motor Fuel Tax funds expended minus the amount of Motor Fuel Tax funds authorized. A positive number will result in a credit to the unobligated fund of the Motor Fuel Tax fund. A negative number means more funds were spent than authorized. If the negative number has a resolution to cover the overage, the item(s) that resulted in the overage have been approved by IDOT, and are covered in the overrun policy, this amount will be authorized. If these conditions are not met you must contact your District office for guidance.

Rebuild Illinois Portion — Insert the amount of the total cost that was paid for with Rebuild Illinois funds for Maintenance and Maint. Engineering, as applicable.

Rebuild Illinois Funds Authorized — Insert the net amount of Rebuild Illinois Funds authorized for each type.

Rebuild Illinois Surplus/Deficit — These are calculated fields, no entry is necessary. This is the sum of the Total Rebuild Illinois funds expended minus the amount of Rebuild Illinois funds authorized. A positive number will result in a credit to the unobligated fund of the Motor Fuel Tax fund. A negative number means more funds were spent than authorized. If the negative number has a resolution to cover the overage, the item(s) that resulted in the overage have been approved by IDOT, and are covered in the overrun policy, this amount will be authorized. If these conditions are not met you must contact your District office for guidance.

Difference — No entry necessary, this field is automatically calculated. It is the difference between Total Motor Fuel Tax/Rebuild Illinois Portion for Maintenance and Maint. Engineering. The fields must equal zero; if not, review the amounts inserted under Motor Fuel Tax and Rebuild Illinois need to be corrected.

Remarks — Enter remarks as applicable covering the items entered.

Certification — Upon submittal of this form as the maintenance expenditure statement the LPA official shall check this box as certification.

End of instructions for Maintenance Expenditure Statement

Submitted

Local Public Agency Official — The proper official shall sign, insert their title and date here. For Estimates of Cost covering a Township/Road District the road commissioner shall sign and date as Local Public Agency Official. For Municipalities the municipal official shall sign and date here.

County Engineer/Superintendent of Highways — For County project and/or Township/Road District projects the county engineer/superintendent of highways shall sign here.

Approved — Upon approval the Regional Engineer shall sign and date here. This approval is subject to change based upon a documentation review by the Department.

When submitting the form via USPS mail, submit a minimum of three (3) signed original must be submitted to the Regional Engineer's District office. This form may be submitted electronically with electronic signatures.
Following the Regional Engineer's approval, distribution will be as follows:

Local Public Agency Clerk
Engineer (Consultant or County Engineer)
District File

IDOT Department Use Only The Following fields are for IDOT use only.

Received

Location Enter the location received from the drop down.

Date Enter the date the document was received.

WMFT Entry

By Enter the name of the person entering the information into the WMFT system.

Date Enter the date on which the information was entered.

VILLAGE OF SCHAUMBURG

AGENDA ITEM SUMMARY

Ordinance No. 26-_____ An Ordinance Amending Title 3, Chapter 41, Section 41.01 of the Schaumburg Village Code Relative to the Village Fee Schedule [first reading – motion to waive first reading].
04/14/26
Village Board

Presenter: Parth Joshi, AICP, Planning Manager
Lead Department: Community Development

Executive Summary:

The Village utilizes third-party contract inspector to perform landscape inspections associated with land development permits (LDP). The contractor is responsible for reviewing the approved landscape plan, performing inspections, creating markup/punch list, coordinating results with staff and communicating results to the applicant. Currently, there are no limits on the number of landscape inspections an applicant can request. Staff is proposing a code amendment to include a landscape reinspection fee for third and subsequent inspections to be paid by the developer.

Similarly, the current fee schedule includes a reinspection fee of $57 for building inspections that may be charged at the discretion of the Building Official after the 2nd reinspection. The fee is to encourage applicants to correct noncompliant items before scheduling additional inspections. To be consistent and better reflect actual service costs, staff is also proposing to increase this fee to align with the proposed landscape reinspection fee.

Recommended Action:

Village Manager recommends the Planning, Building, and Development committee recommend the Village Board approve an amendment to the fee schedule pertaining to reinspection fees.

ATTACHMENTS:

- Memo
- Redline
- Ordinance

MEMORANDUM

Date: March 11, 2026

To: Village Manager

From: Parth Joshi, Planning Manager, AICP

Subject: Recommendation to Amend the Fee Schedule pertaining to reinspection fees

For: Planning Building and Development Committee

Introduction

The Village utilizes third-party contract inspector to perform landscape inspections associated with land development permits (LDP). The contractor is responsible for reviewing the approved landscape plan, performing inspections, creating markup/punch list, coordinating results with staff and communicating results to the applicant. Currently, there are no limits on the number of landscape inspections an applicant can request. Staff is proposing a code amendment to include a landscape reinspection fee for third and subsequent inspections to be paid by the developer.

Similarly, the current fee schedule includes a reinspection fee of $57 for building inspections that may be charged at the discretion of the Building Official after the 2nd reinspection. The fee is to encourage applicants to correct noncompliant items before scheduling additional inspections. To be consistent and better reflect actual service costs, staff is also proposing to increase this fee to align with the proposed landscape reinspection fee.

Discussion

Landscape Reinspections

The scope of work for landscaping associated with LDPs primarily includes installation of new plantings, typically for a new construction project. At times, LDP's are also issued for modifications of existing sites with an amended landscape plan. In the past year, there were several large-scale projects which required multiple inspections including but not limited to Lurie Children's Hospital, Duly healthcare, Element Rowhomes, Summit Grove, Verde Estates and Holiday Inn Express. The construction timeline of these projects typically spans multiple years. In many cases, the first and second inspections identified incomplete work, requiring additional trips by the contract inspector to perform a final inspection. These additional inspections increase administrative burden and contract costs.

To address the issue, staff is proposing to pass through costs associated with these additional inspections beyond the first two inspections. An inspection represents only a fraction of the resources expended. In addition to a physical inspection, the village could incur additional costs for creating markup/punch list, communications, and administrative documentation. The proposed fee would be a minimum of $100 for each subsequent landscape inspection after the 1st reinspection to be charged to the applicant. The third-party inspector documents and bills costs associated with each project. These would be passed along to the applicant. The proposed fee will

encourage applicants to ensure landscape work is ready prior to requesting inspection and help offset costs incurred by the Village for repeated site visits. Additionally, codifying the proposed fee into the Village's current fee schedule will provide staff with a legal mechanism to pass through the cost. Staff anticipate several high-profile and large-scale projects to be under construction and/or ready for final landscape inspections in the upcoming fiscal year 2027.

Building Reinspections

The Village currently has a $57 building reinspection fee that may be charged after the 2nd reinspection. To better align with actual costs and maintain consistency with the proposed landscape reinspection fee, staff is recommending increasing the building reinspection fee from $57 to $100 per inspection, for the third and each subsequent inspection**.** The proposed adjustment will also encourage applicants to ensure compliance prior to requesting inspections, improve cost recovery for inspection services and create consistency across inspection related fees.

Proposed Redline

Attached to your packets is the proposed redline exhibit. New language is shown in red.

Recommendation

Staff recommends the Planning, Building, and Development committee recommend the Village Board approve an amendment to the fee schedule pertaining to reinspection fees.

§ 41.01 VILLAGE FEE SCHEDULE.

It shall be unlawful for any person to engage in or operate any business, trade, or occupation named in this section without paying in advance the license or other fee listed below. Such fees upon collection shall become part of the corporate fund or such other fund as the village board shall determine. Any renewal fee which is not received on or before the due date shall be increased in the amount of fifty percent (50%) of the license fee hereinafter set forth, unless otherwise stated.

(A) General Fees:

(B) Community Development Fees and Permits:

Building fees:	
Reinspection fee:	
To be charged after the 2nd reinspection at the discretion of the building official	$~~57~~100.00 per inspection, as required

Permit Type	**Current Fees**
Engineering fees:	
Drainage improvements:	
Residential single-family only	$50.00
Fire Buffalo box lids	$0.00
Land development:	
Commercial/industrial/non-single-family: Fees based on 2% of the approved Engineer's Estimate of Probable Cost (EOPC)	$3,000.00 minimum
Reviews requiring outside consultant assistance will be billed directly at the outside consultant rate	
~~Reviews requiring outside consultant assistance will be billed directly at the outside consultant rate~~	
Reinspection fees:	
Landscape inspections to be charged after the 1st reinspection. All costs will be passed through for subsequent inspections directly at the discretion of the Director of Community Development	$100.00 minimum

PUBLICATION OF:

ORDINANCE NO. 26_____

AN ORDINANCE AMENDING TITLE 3, CHAPTER 41, SECTION 41.01 OF THE SCHAUMBURG VILLAGE CODE RELATIVE TO THE VILLAGE FEE SCHEDULE

ADOPTED:

PUBLISHED IN PAMPHLET FORM PURSUANT TO AUTHORIZATION AND DIRECTION OF THE PRESIDENT AND BOARD OF TRUSTEES OF THE VILLAGE OF SCHAUMBURG ON

409018_1
2078640_1

ORDINANCE NO. ____

AN ORDINANCE AMENDING TITLE 3, CHAPTER 41, SECTION 41.01 OF THE SCHAUMBURG VILLAGE CODE RELATIVE TO THE VILLAGE FEE SCHEDULE

WHEREAS, the Village of Schaumburg, as a home rule unit of local government as provided by Article VII, Section 6 of the Illinois Constitution of 1970, has the authority to exercise any power and perform any function pertaining to its government and affairs, except as limited by Article VII, Section 6 of the Illinois Constitution of 1970; and

WHEREAS, the Village of Schaumburg currently fee schedule to compensate the village for certain services, which requires updating from time to time; and

WHEREAS, the Village of Schaumburg finds it in the best interests of the Village to amend the Village Code relative to the same;

NOW, THEREFORE, BE IT ORDAINED BY THE PRESIDENT AND BOARD OF TRUSTEES OF THE VILLAGE OF SCHAUMBURG:

SECTION ONE: The recitals above shall be and are hereby incorporated in this Section 1 as if restated herein.

SECTION TWO: That Title 3 (Administration), Chapter 41 (Village Fee Schedule), Section 41.01(B) (Community Development Fees and Permits) is hereby amended, in part, as follows:

Building fees:	
Reinspection fee:	
To be charged after the 2nd reinspection at the discretion of the building official	$~~57~~100.00 per inspection, as required

Engineering fees:	
Drainage improvements:	
Residential single-family only	$50.00
Fire Buffalo box lids	$0.00
Land development:	
Commercial/industrial/non-single-family: Fees based on 2% of the approved Engineer's Estimate of Probable Cost (EOPC)	$3,000.00 minimum
Reviews requiring outside consultant assistance will be billed directly at the outside consultant rate	
~~Reviews requiring outside consultant assistance will be billed directly at the outside consultant rate~~	
Reinspection fees:	
Landscape inspections to be charged for the third and each subsequent inspection. Additional third-party inspection costs	$100.00 minimum

ORDINANCE NO. ____

AN ORDINANCE AMENDING TITLE 3, CHAPTER 41, SECTION 41.01 OF THE SCHAUMBURG VILLAGE CODE RELATIVE TO THE VILLAGE FEE SCHEDULE

will be passed through to the applicant at the discretion of the Director of Community Development	

SECTION THREE: This Ordinance shall be in full force and effect, after passage, approval and publication as required by law.

AYES:

NAYS:

ABSENT:

PASSED AND APPROVED this _____ day of _____, 2026.

_____
Village President

ATTEST:

_____
Village Clerk

VILLAGE OF SCHAUMBURG

AGENDA ITEM SUMMARY

Ordinance No. 26-_____ An Ordinance Authorizing the Disposal of Surplus Personal Property Owned by the Village of Schaumburg [first reading - motion to waive first reading].
04/14/26
Village Board

Presenter: Brian Rafferty, Fleet Division Manager
Lead Department: Engineering and Public Works

Executive Summary:

Staff is seeking formal approval to dispose of 17 vehicles and 8 pieces of equipment designated as retired or surplus in the Fiscal Year 26/27 Vehicle Replacement Schedule. Per Village Policy 7.40, vehicles that are fully depreciated and/or due for replacement due to age, mileage, condition, and operating expense are identified and recommended for disposal.

For Engineering and Public Works, a 2016 TV Truck is proposed for replacement. This unit will be traded in to offset the cost of its replacement.

For the Fire Department:

- A 2019 Ambulance is proposed for replacement. Upon receiving the new ambulance, the 2019 will go into reserve status and the future reserve, another 2019, will be proposed to be auctioned off.
- A 2017 Fire Engine is proposed for replacement. Upon receiving the new engine, the 2017 will go into reserve status and the current reserve, a 2008, will be proposed to be auctioned off.
- A 2016 Fire Truck is proposed for replacement. Upon receiving the new truck, the 2016 will go into reserve status and the current reserve, a 2012, will be proposed to be auctioned off.

Staff consider the surplus vehicle and equipment as a trade-in with the purchase of a replacement. However, if a trade-in is not possible, or if a trade-in does not yield an acceptable return value, it is included in the vehicle online auction at publicsurplus.com where other surplus vehicles are auctioned off to yield the highest residual value.

Recommended Action:

The Village Manager recommends that the Engineering & Public Works Committee recommend the Village Board adopt an Ordinance authorizing the Disposal of Surplus Vehicles as listed on the FY 26/27 Vehicle Replacement Schedule.

ATTACHMENTS:
- Vehicle Replacement Policy 7.40
- FY 26/27 Vehicle Replacement Plan
- Ordinance

POLICY STATEMENT 7.40 TITLE: - EQUIPMENT/VEHICLE REPLACEMENT (REVISED)

Engineering & Public Works Committee: October 17, 2013

COW Approval: November 19, 2013 (February 20, 2007; January 20, 2004)

Last VB Approval: December 10, 2013 (February 27, 2007; January 13, 2004)

Date: December 10, 2013

Goal Statement: The Village of Schaumburg aspires to provide its employees with equipment and vehicles that enable them to offer effective and efficient services that our residents demand while applying sound business approaches associated with understanding the costs and benefits of equipment and its capabilities; funding purchases through a pay as you go methodology as much as practical; and making decisions on replacements considering the level of usage, performance, and return through sale or trade-in.

Funding: The repository of the reserves for future equipment and vehicle replacements is known as the equipment/vehicle replacement fund. The purpose of the fund is to provide assured and adequate resources for the future replacement of vehicles and mobile equipment, not subject to the financial constraints of the general fund. Upon acquisition, any rolling stock with a purchase value in excess of one thousand dollars ($1,000.00) and an expected life in excess of one (1) year shall be automatically included in the equipment/vehicle replacement fund for future replacement, and the appropriate replacement charge will be collected from the fund from which the benefiting department derives its funding.

Revenues: The revenues for the equipment/vehicle replacement fund are generated from replacement charges (funded depreciation) applied against the operating funds of the village that support the departments that utilize the subject equipment and vehicles, surplus equipment/vehicle sale proceeds, insurance claims, and investment income.

The replacement charge is determined through the use of the following formula:

* Gross purchase price plus aftermarket expenses that have the same life expectancy as the unit, not including light bars and radios, divided by anticipated life cycle (see standards for replacement) = replacement charge.
* Trade-in or surplus sale values for the subject equipment are not included in the formula to help offset future cost increases in the equipment/vehicles that may be higher than the rate of inflation.
* Income from the settlement of property damage insurance claims on the vehicle, self-insured or third party, resulting in the total loss of village equipment or vehicle, shall be returned to the equipment/vehicle replacement fund to enable the purchase of a replacement unit. A new account shall be established for the replacement unit.

Fund Balance: The reserve fund balance of the equipment/vehicle replacement fund should be sufficient to meet the following objectives:

* Fund the current fiscal year vehicle purchase needs;
* Fund the annual average of the total five-year projected purchase needs; and
* Generate sufficient investment income to offset inflation of the vehicle replacement costs in conjunction with surplus sale revenue.

In Like Kind Replacement: The equipment/vehicle replacement fund is structured to replace each piece of equipment or vehicle by a unit of like kind. It is understood that capabilities and technology associated with the various units may change over the course of time. Cost increases due to upgrades, additions of options, or other improvements associated with units scheduled for replacement shall be highlighted as

an element of the annual budget presentation, and shall either be funded from transfers from the operating funds or from unencumbered fund balance.

Annual Budget Detail: The annual fiscal year budget shall disclose the anticipated cost for the replacement of the equipment or vehicle and the amount of money that is in the equipment/vehicle replacement fund account for the replacement. In the event that the fund account's resources are not sufficient to fully pay for the item, the difference and the means to make up the difference shall be noted in the budget document.

Additions To The Village's Equipment Inventory and Fleet: These units shall be noted as "new items" in the subject department's fiscal year budget appropriation request, with an equivalent dollar amount transferred to the equipment/vehicle replacement fund. The subject department's annual budget shall also be adjusted to include the appropriate depreciation charge and operating/maintenance support expenses associated with the new unit.

Processes: The processes associated with the development of the annual five (5) year equipment/vehicle replacement plan and development of specifications for the equipment and vehicle replacements are hereby adopted as detailed in attachment A as provided herein. The schedule for the completion of the various tasks shall be in accordance with attachment B as provided herein.

Scheduled Replacement Guidelines: Guidelines for the replacement of equipment and vehicles are hereby established, and adopted as detailed in attachment C as provided herein for the purpose of creating depreciation amounts. Each piece in the fleet vehicle and equipment inventory shall be evaluated for replacement on an annual basis. Evaluation criteria shall include:

* The cost of maintenance per mile or hour;
* Life to date utilization (miles or hours);
* Age; and
* General mechanical and body condition.

Units are considered candidates for replacement when life to date utilization and/or age meets or exceeds the expected service life, as detailed for each unit class in the scheduled replacement guidelines. Age and accumulated mileage shall serve as the principal determinant of when a vehicle or equipment is replaced. With certain exceptions, such as the exemption provided for police squad cars and where extraordinary maintenance costs have been incurred, both standards should be achieved or projected to be reached during the subject fiscal year, based on past usage, when the replacement program is developed.

The replacement guidelines shall be subject to review by the FLAGG committee.

These standards are guidelines only and individual unit life cycles may differ based on expected utilization or other operating conditions. In the event that management wishes to deviate from the guidelines, justifications shall be presented, including an understanding on how granting the deviation will affect the status of the equipment/vehicle replacement fund. The replacement charges, i.e., depreciation amounts, shall be adjusted as well to account for the change in timing for the replacement.

Any proposed deviation from the adopted guidelines shall be subject to the review and approval of the finance, legal, administration and general government (FLAGG) committee and entire village board as a part of the five-year equipment/vehicle replacement plan.

Unanticipated New Additions: Unless it can be shown to be in the interest of promoting the health, safety and welfare of the general public to do otherwise, all new requests for the purchase of additional pieces of equipment shall be presented to the village board as an element of the annual budget process.

Roles

Engineering & Public Works Department:

* Prepares five-year equipment/vehicle replacement plan with the finance department for the review and approval of the village manager's office and village board.
* Prepares the timetable for the replacement of equipment/vehicles for which the village board has provided appropriations within the annual budget.
* Communicates information on the cost of operating vehicles and equipment to the relevant village departments.
* Provides leadership and coordination for the development of specifications for bids for the replacement of equipment and vehicles.
* Makes recommendations to the engineering & public works committee on the award of contracts for bids on replacement equipment and vehicles.

Finance Department:

* Provides assistance to the engineering & public works department on the development of the five-year equipment/vehicle replacement plan.
* Establishes depreciation schedules for each piece of village owned equipment and vehicle for the equipment/vehicle replacement fund.
* Maintains the accounts for the equipment/vehicle replacement fund.
* Assists in the development of the five-year equipment/vehicle replacement plan.
* Coordinates the bidding process associated with the replacement of equipment and vehicles.

Other Village Departments:

* Provides input to the team preparing the five-year equipment/vehicle replacement fund, including whether deviations should be sought.
* Provides input on the timetable for the replacement of equipment and vehicles.
* Provides input on the development of plans and specifications for the replacement of vehicles.

Village Manager's Office:

* Provides input and approval to the "draft" five-year equipment/vehicle replacement plan prior to presentation to the village board.
* Provides input and approval to the "draft" timetable for equipment/vehicle replacement for the current fiscal year.
* Reviews and approves recommendations on the awards of bids for equipment and vehicle replacements.
* Reviews requests for additional funding associated with the purchase of equipment/vehicles where sufficient funds are not available in the equipment/vehicle replacement fund account.

Village Board - Finance, Legal, Administration and General Government Committee:

* Reviews, modifies, rejects or approves requests for additional funding associated with the purchase of equipment/vehicles where sufficient funds are not available in the equipment/vehicle replacement fund account.

Entire Village Board:

* Reviews, modifies, rejects or accepts staff's recommendations for the five-year equipment/vehicle replacement plan as a part of the overall fiscal year budget approval process.

* Reviews, modifies, rejects or accepts the FLAGG committee's recommendations on requests for additional funding associated with the purchase of equipment/vehicles where sufficient funds are not available in the equipment/vehicle replacement fund account.

Annual Vehicle and Equipment Replacement Plan Development - Attachment A

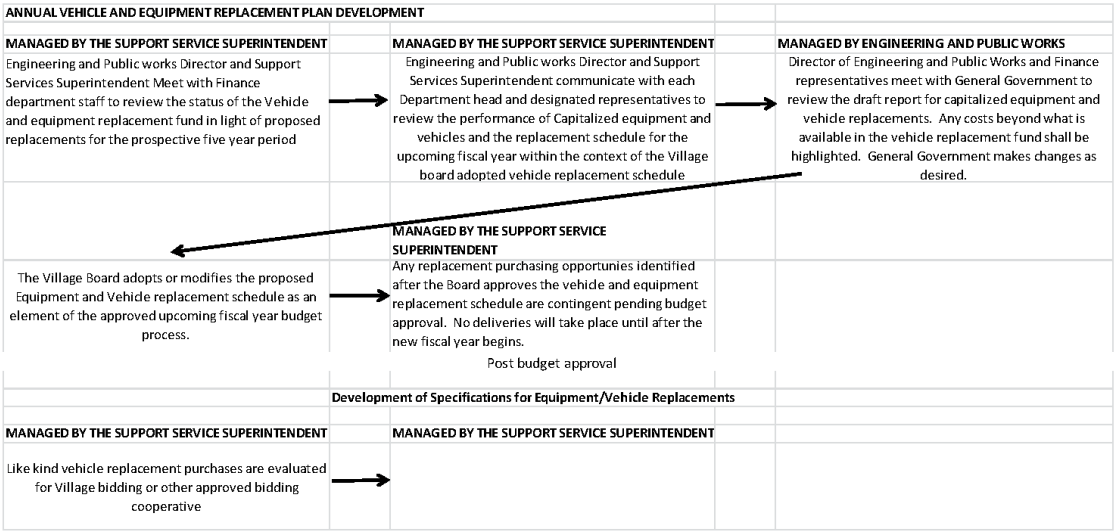

Village Of Schaumburg Vehicular Equipment Replacement Timetable—Attachment B

	Annual/Five Year Vehicular Equipment Replacement Plan	Vehicular Equipment Replacement
Month	**Task**	**Task**
May	n/a	Timetable for planned equipment/vehicle replacements for the next eighteen (18) months submitted to the village manager's office for approval
June	n/a	Specifications developed; bids sought and approved
July	n/a	Specifications developed; bids sought and approved
August	n/a	Specifications developed; bids sought and approved
September	Engineering & public works director and support services superintendent meet with finance department staff to review the status of the	Specifications developed; bids sought and approved

	equipment/vehicle replacement fund in light of proposed replacements for the prospective five (5) years	
October	Engineering & public works director and support services superintendent meet with each department director and designated representatives to review the performance of capitalized equipment and vehicles and the replacement schedule for the upcoming five (5) fiscal years within context of the village board adopted replacement schedule; deviations from the adopted replacement schedule, i.e., delays or advancements in replacement due to lower than expected usage, satisfaction with performance, shall be highlighted	Specifications developed; bids sought and approved
November	Engineering & public works director and finance department representatives meet with the village manager's office staff to review the draft replacement plan for capitalized equipment and vehicles; increased costs beyond what is available in the equipment/vehicle replacement fund shall be highlighted; manager make changes as desired	Specifications developed; bids sought and approved
January	Recommendations for upcoming fiscal year are placed in the budget document	Specifications developed; bids sought and approved
February	n/a	Specifications developed; bids sought and approved
March	n/a	Specifications developed; bids sought and approved
April	Village Board adopts or modifies the five-year equipment/vehicle replacement plan as an element of the adoption of the annual budget	Specifications developed; bids sought and approved
		Timetable for planned replacements of equipment/vehicles for next eighteen

		(18) months is prepared by fleet services foreman and support services superintendent; reviewed with the engineering & public works director, finance department, and operating departments

Guidelines for Equipment and Vehicular Replacement—Attachment C

Departments	Class Code	Class Name	Description	Months Or Miles/Hours, Whichever Occurs First
Fire	4	Large sedan	Over 110" WB, over 3,400 GVW	84 months/90,000 miles
Police	5	Police sedan-patrol	Over 110" WB, over 3,400 GVW	36 months/90,000 miles
Police	8	Police investigation	Sedans	36 months/no mileage clause
Police	9	CSO vans	Cargo vans	48 months/90,000 miles
Fire	10	Minivan	Under 6,000 GVW	72 months/60,000 miles
Engineering & Public Works	11	Van class 2	6,001-10,000 GVW	120 months/90,000 miles
Engineering & Public Works	12	Van class 3	10,001-14,000 GVW	84 months/90,000 miles
Engineering & Public Works	13	Van class 4	Over 14,000 GVW	120 months/5,000 hours
Engineering & Public Works	20	2 WD utility vehicle class 1	Under 6,000 GVW	84 months/90,000 miles
Engineering &	21	2 WD utility	6,000-10,000 GVW	72 months/60,000 miles

Public Works		vehicle class 2		
Engineering & Public Works	22	2 WD truck class 1	Under 6,000 GVW	84 months/90,000 miles
Engineering & Public Works	23	2 WD truck class 2	6,000-10,000 GVW	84 months/60,000 miles
Engineering & Public Works	24	2 WD truck class 3	10,001-14,000 GVW	84 months/60,000 miles
Engineering & Public Works	25	2 WD truck class 4	14,001-16,000 GVW	96 months/60,000 miles
Engineering & Public Works	26	2 WD truck class 5	16,001-19,500 GVW	96 months/6,000 hours
Engineering & Public Works	27	2WD truck class 6	19,501-26,000 GVW	96 months/6,000 hours
Engineering & Public Works	28	2 WD truck class 7	26,001-33,000 GVW	120 months/6,000 hours
Engineering & Public Works	29	2 WD truck class 8	33,001-50,000 GVW	144 months/6,000 hours
Police	40	4 WD utility vehicle class 1	Under 6,000 GVW	84 months/90,000 miles
Engineering & Public Works	41	4 WD utility vehicle class 2	6,001-10,000 GVW	84 months/90,000 miles
Engineering & Public Works	42	4 WD truck class 1	Under 6,000 GVW	72 months/60,000 miles
Engineering & Public Works	43	4 WD truck class 2	6,001-10,000 GVW	72 months/72,000 miles
Engineering & Public Works	44	4 WD truck class 3	10,001-14,000 GVW	72 months/72,000 miles

Engineering & Public Works	45	4 WD truck class 4	14,001-16,000 GVW	96 months/6,000 hours
Engineering & Public Works	46	4 WD truck class 5	16,001-19,500 GVW	96 months/6,000 hours
Engineering & Public Works	47	4 WD truck class 6	19,501-26,000 GVW	96 months/6,000 hours
Engineering & Public Works	48	4 WD truck class 7	26,001-33,000 GVW	120 months/6,000 hours
Engineering & Public Works	49	4 WD truck class 8	33,001-50,000 GVW	120 months/6,000 hours
Engineering & Public Works	50	Tandem axle truck		120 months/8,000 hours
Fire	51	Ambulance		96 months/10,000 hours
Fire	52	Rescue squad		120 months/9,000 hours
Fire	53	Fire engine	Water carrying pumper truck	144 months/6,000 hours
Fire	54	Fire truck	Ladder carrying truck	120 months/6,000 hours
Engineering & Public Works	56	Sweepers	Mechanical vacuum	84 months/7,500 hours
Engineering & Public Works	57	Sewer cleaners	Flusher/rodder/vacuum	84 months/5,000 hours
Engineering & Public Works	58	Utility tractor	Farm tractor	120 months/5,000 hours
Engineering & Public Works	59	Backhoe light duty	Under 1.25 Cy bucket	96 months/4,000 hours
Engineering & Public Works	60	Backhoe heavy duty	Over 1.25 Cy bucket	120 months/6,000 hours

Engineering & Public Works	61	Skid steer loader		120 months/5,000 hours
Engineering & Public Works	62	Wheel loader >2 Cy	Articulating-under 2 Cy bucket	120 months/5,000 hours
Engineering & Public Works	63	Wheel loader <2 Cy	Articulating-over 2 Cy bucket	120 months/5,000 hours
Engineering & Public Works	64	Air compressor	Trailer mounted 100-200 CFM	120 months/5,000 hours
Engineering & Public Works	65	Wood chipper	Trailered drum wood chipper	120 months/5,000 hours
Engineering & Public Works	66	Asphalt paver	Tow behind paver	96 months
Engineering & Public Works	67	Roller	Articulated	96 months
Engineering & Public Works	68	Asphalt sprayer	Applicator of asphalt emulsion	96 months
Engineering & Public Works	69	Crack sealer	Applicator of heated rubberized asphalt	60 months
Engineering & Public Works	75	Cement mixer	Tow behind	96 months
Engineering & Public Works	77	Concrete saw	Walk behind/crack	60 months
Engineering & Public Works	78	Tracked tractor	Skid type w/tracks	120 months/5,000 hours
Engineering & Public Works	79	Pump <4"	Less than 4" water pump	120 months
Engineering &	80	Pump >4"	More than 4" water pump	120 months

Public Works				
Engineering & Public Works	81	Trencher		120 months
Engineering & Public Works	82	Portable generator	Ground power unit	48 months
Engineering & Public Works	83	Trailer mounted generator	Ground power unit	144 months
Engineering & Public Works	84	Trailer light duty	Under 6,000 GVW	120 months
Engineering & Public Works	85	Trailer medium duty	6,001_10,000 GVW	120 months
Engineering & Public Works	86	Trailer heavy duty	Over 10,000 GVW	120 months
Engineering & Public Works	88	Stump grinder		84 months
Engineering & Public Works	89	Snowblowers	Large truck/loader mountes	120 months
Engineering & Public Works	90	Grounds sprayer		96 months
Engineering & Public Works	91	Large plows	Airport/specialized	120 months
Engineering & Public Works	99	Miscellaneous equipment		120 months

GVW stands for gross vehicle weight.

Unit #	Unit Description	Division	Current Meter	Full Depreciation Date	Salvage Estimate	Estimated Purchase Price
	Police					
10108	2022 Utility Interceptor	Patrol	73,218	7/7/2025	$5000-$8000	$ 56,000
10117	2023 Utility Interceptor	Patrol	57,088	5/30/2026	$3500-$5500	$ 56,000
10122	2023 Utility Interceptor	Patrol	63,836	5/30/2026	$3500-$5500	$ 56,000
10134	2023 Utility Interceptor	Patrol	62,361	5/30/2026	$3500-$5500	$ 56,000
10140	2023 Utility Interceptor	Patrol	62,283	5/30/2026	$3500-$5500	$ 56,000
19375	2016 Speed Trailer	Patrol	N/A	2/1/2026	$300-$1000	$ 23,000
	Fire					
10958	2019 Freightliner Ambulance	Fire Fight	8,146	6/1/2027	Becomes Reserve	$ 485,000
10964	2017 Fire Engine	Fire Fight	7,102	11/1/2029	Becomes Reserve	$ 1,300,000
10965	2016 Fire Truck	Fire Fight	2,370	1/1/2027	Becomes Reserve	$ 2,300,000
10969	2017 Chevy Tahoe	Fire Fight	81,588	4/1/2024	$4000-$8000	$ 86,000
10970	2020 Utility Interceptor	Fire Admin	87,308		$5000-$8000	$ 56,000
	Transportation					
19360	2016 Speed Trailer	Transportation	N/A	2/1/2026	$300-$1000	$ 23,000
	Engineering & Public Works					
10014	2016 TV Truck	Sanitary	20,705	2/2/2024	$5000-$8000	$ 425,000
10021	2015 4X4 Utility	Water	67,223	1/1/2022	$5000-$8000	$ 45,000
10034	2017 Snow and Ice Truck	Streets	4,366	11/1/2026	$12000-$20000	$ 430,000
10054	Addition to FLeet - F-150	Buildings				$ 62,000
10079	2016 4X4 Pickup Truck w/Plow	Sanitary	33,312	2/1/2022	$8000-$12000	$ 93,000
10083	Addition to Fleet - F-250	Buildings				$ 78,000
10085	2016 4X4 Dump Truck w/ Plow	Storm	47,732	4/1/2022	$8000-$12000	$ 100,000
10201	2016 Ford Focus	Buildings	20,676	9/1/2023	$3000-$6000	$ 65,500
10233	2013 Medium SUV	Buildings	65,869	12/1/2019	$5000-$8000	$ 65,500
19274	1994 GPU	Water	182	11/1/2006	$2000-$5000	$ 350,000
19372	2000 Enclosed Trailer	Landscape	N/A	9/1/2010	$1000-$3000	$ 16,000
19381	2001 Enclosed Trailer	Streets	N/A	4/1/2011	$1000-$3000	$ 16,000
19382	2001 Graffiti Trailer	Customer Service	N/A	4/1/2011	$1000-$3000	$ 30,000
19386	2001 Trailer	Buildings	N/A	8/1/2011	$500-$1500	$ 19,000
19395	2012 Enclosed Trailer	Water	N/A	5/1/2022	$1500-$3500	$ 17,000

Total Cost	$ 6,365,000

PUBLICATION OF:

ORDINANCE NO 26-_____

AN ORDINANCE AUTHORIZING THE DISPOSAL OF SURPLUS PERSONAL PROPERTY OWNED BY THE VILLAGE OF SCHAUMBURG

ADOPTED: APRIL 14, 2026

PUBLISHED IN PAMPHLET FORM PURSUANT TO AUTHORIZATION AND DIRECTION OF THE PRESIDENT AND BOARD OF TRUSTEES OF THE VILLAGE OF SCHAUMBURG ON APRIL 15, 2026

ORDINANCE NO 26-_____

ORDINANCE AUTHORIZING THE DISPOSAL OF SURPLUS PERSONAL PROPERTY OWNED BY THE VILLAGE OF SCHAUMBURG

WHEREAS, in the opinion of at least three-fourths of the corporate authorities of the Village of Schaumburg, it is no longer necessary, useful, or in the best interest of Schaumburg to retain ownership of the personal property hereinafter described; and

WHEREAS, it has been determined by the President and the Board of Trustees of the Village of Schaumburg that it is in the Village's best interest to dispose of said personal property.

NOW, THEREFORE, BE IT ORDAINED BY THE PRESIDENT AND BOARD OF TRUSTEES OF THE VILLAGE OF SCHAUMBURG:

SECTION ONE: Pursuant to Chapter 65, section 5/11-76-4 of the Illinois Compiled Statutes, the President and Board of Trustees for the Village of Schaumburg find that personal property listed below now owned by Schaumburg is no longer necessary or useful, and Schaumburg's interest would be best served by the properties' disposal.

SECTION TWO: The Village Manager for the Village of Schaumburg is hereby authorized to direct the disposal of the personal property detailed below either through approved live or on-line auctions or trade-in, with minimum values as set forth in the table below:

Unit	Asset Number	Unit Description	Minimum Value	Salvage Estimate
10108	A16000266	2022 Utility Interceptor	$5,000	$5,000-$8,000
10117	A19000283	2023 Utility Interceptor	$3,500	$3,500-$5,500
10122	A19000284	2023 Utility Interceptor	$3,500	$3,500-$5,500
10134	A19000289	2023 Utility Interceptor	$3,500	$3,500-$5,500
10140	A19000292	2023 Utility Interceptor	$3,500	$3,500-$5,500
19375	A16000261	2016 Speed Trailer	$300	$300-$1,000
10940	A15000004	2015 Freightliner Ambulance	$4,500	$4,500-$7,000
10947	A09000023	2008 Fire Engine	$5,000	$5,000-$8,000
10935	A13000041	2012 Fire Truck	$5,000	$5,000-$10,000
10969	A17000110	2017 Chevy Tahoe	$4,000	$4,000-$8,000
10970	A01000423	2020 Utility Interceptor	$5,000	$5,000-$8,000
19360	A00000089	2016 Speed Trailer	$300	$300-$1,000
10014	A16000259	2016 TV Truck	Trade in for $125,000 off new replacement	
10021	A15000142	2015 4X4 Utility	$5,000	$5,000-$8,000
10034	A17000078	2017 Snow and Ice Truck	$12,000	$12,000-$20,000
10079	A16000265	2016 4X4 Pickup Truck w/Plow	$8,000	$8,000-$12,000
10085	A16000269	2016 4X4 Dump Truck with Plow	$8,000	$8,000-$12,000
10201	A17000075	2016 Ford Focus	$2,000	$3,000-$6,000
10233	A13000047	2013 Medium SUV	$5,000	$5,000-$8,000
19274	501	1994 GPU	$2,000	$2,000-$5,000
19372	A01000195	2000 Enclosed Trailer	$1,000	$1,000-$3,000

Unit	Asset Number	Unit Description	Minimum Value	Salvage Estimate
19381	A01000413	2001 Enclosed Trailer	$1,000	$1,000-$3,000
19382	A01000343	2001 Graffiti Trailer	$1,000	$1,000-$3,000
19386	A02000312	2001 Trailer	$500	$500-$1,500
19395	A13000037	2012 Enclosed Trailer	$1,500	$1,500-$3,500
			$90,100	$90,100 to $158,000

SECTION THREE: If auctioned, the Village Manager is hereby authorized to: direct the auctioning agency to advertise the sale of the aforementioned personal property through area newspapers, direct mailings, and other channels deemed appropriate prior to the date of the auction; direct the auctioning agency to enter into an agreement for the sale of said property whereby said property is sold at auction; and direct the auctioning agency, upon payment in full for the aforesaid items of personal property, to convey and transfer the title and ownership of said personal property to the bidder.

SECTION FOUR: No bid shall be accepted for the sale of an item which is less than the minimum value set forth herein, unless the Village Manager or the designee of the Village Manager so authorizes at the time of the auction or trade-in.

SECTION FIVE: This ordinance shall be in full force and effect from and after its passage, by a vote of at least three-fourths of the corporate authorities, and approval in the manner provided by law.

AYES:
NAYS:
ABSENT:

PASSED AND APPROVED this _____ day of _____, 2026.

_____
Village President

ATTEST:

_____
Village Clerk

VILLAGE OF SCHAUMBURG

AGENDA ITEM SUMMARY

Ordinance No. 26-_____An Ordinance Dissolving the Schaumburg Board of Health [first reading – motion to waive first reading].
04/14/26
Village Board

Presenter: Fabio Puccini, Fire Chief
Lead Department: Fire Department

Executive Summary:

Recommended Action:

ATTACHMENTS:
- Ordinance_Dissolving_Board_of_Health (2).docx

PUBLICATION OF:

ORDINANCE NO. _____

ORDINANCE DISSOLVING THE SCHAUMBURG BOARD OF HEALTH.

ADOPTED: APRIL 14, 2026

PUBLISHED IN PAMPHLET FORM

PURSUANT TO AUTHORIZATION AND DIRECTION

OF THE PRESIDENT AND BOARD OF TRUSTEES

OF THE VILLAGE OF SCHAUMBURG ON APRIL 15, 2026

ORDINANCE NO. _____

AN ORDINANCE DISSOLVING THE SCHAUMBURG BOARD OF HEALTH

WHEREAS, the Village of Schaumburg ("Village") is a home rule municipality organized and operating under Article VII, Section 6 of the Illinois Constitution of 1970; and

WHEREAS, the Village previously created the Schaumburg Board of Health ("Board of Health") for the purpose of recommending necessary rules and regulations, and recommending minimum standards for the protection of health in the Village to guard against the spread of contagious diseases and to prevent the induction of disease within the Village; and

WHEREAS, the Village of Schaumburg falls under the jurisdiction of the Cook County Department of Public Health ("CCDPH"), which retains full statutory authority over public health matters within Cook County, thereby limiting the Village's ability to independently adopt or enforce health standards or recommendations that conflict with CCDPH directives; and

WHEREAS, as a result of CCDPH's countywide jurisdiction, the Board of Health's recommendations are advisory only and cannot be independently implemented by the Village where they conflict with county-level requirements; and

WHEREAS, the Board of Health currently has only three members, repeated efforts to recruit additional members have been unsuccessful, and the Board no longer serves a functional or effective role in shaping public health policy within the Village; and

WHEREAS, Village staff has determined that dissolving the Board of Health will promote administrative efficiency by reducing staff time devoted to supporting a non-functional advisory body, and the Village will continue to support public health initiatives through existing programs, including the Committee on Aging and the Nursing & Senior Services Division; and

WHEREAS, the Corporate Authorities of the Village find that the Board of Health is no longer necessary to the operations or governance of the Village and that dissolving the Board of Health is in the best interests of the Village and its residents.

NOW, THEREFORE, BE IT ORDAINED by the President and Board of Trustees of the Village of Schaumburg, Cook County, Illinois, as follows:

SECTION 1. Dissolution of the Board of Health.

The Schaumburg Board of Health is hereby dissolved in its entirety, and all offices, positions, authorities, and responsibilities associated with the Board of Health are hereby abolished. All terms of current members shall terminate automatically upon passage of this Ordinance, without further action.

SECTION 2. Repeal of Prior Ordinances.

All prior ordinances, or portions thereof, that created, established, or governed the Board of Health, or that are otherwise inconsistent with this Ordinance, are hereby repealed.

ORDINANCE NO. _____

AN ORDINANCE DISSOLVING THE SCHAUMBURG BOARD OF HEALTH

SECTION 3. No Successor Board Required.

No successor board, commission, or committee is created by this Ordinance. The Village shall continue supporting health-related initiatives through its existing departments, commissions, and programs.

SECTION 4. Severability.

If any section, paragraph, clause, or provision of this Ordinance is determined to be invalid or unenforceable, such invalidity or unenforceability shall not affect the remaining provisions.

SECTION 5. Effective Date.

This Ordinance shall be in full force and effect upon its passage and approval as provided by law.

PASSED this ___ day of _____, 2026.
APPROVED this ___ day of _____, 2026.

_____

Tom Dailly, Village President

ATTEST:

_____

Jane, Lentino, Village Clerk

VILLAGE OF SCHAUMBURG

AGENDA ITEM SUMMARY

Resignations/Appointments of Committee Members
04/14/26
Village Board

Presenter:
Lead Department: President and Board

Executive Summary:

Recommended Action:

ATTACHMENTS:
- VBM April 14, 2026 Appointments Memo.pdf

VILLAGE OF SCHAUMBURG

PROGRESS THROUGH THOUGHTFUL PLANNING

OFFICE OF MAYOR TOM DAILLY

MEMORANDUM

Date: March 26, 2026
To: Board of Trustees
From: Village President
Subject: Committee/Commission Appointments/Resignations

I ask for your concurrence in the appointments/resignations on the following committee/commissions at the April 14, 2026, Board meeting.

Electrical Committee (all terms end 04/30/2027):
Appointment(s): Vincent Morabito

Respectfully,

Tom Dailly

Tom Dailly
Mayor

VILLAGE OF
SCHAUMBURG

AGENDA ITEM SUMMARY

In accordance with Section 2(c)(2) of the Open Meetings Act, (Collective Bargaining). Collective negotiating matters between the public body and its employees or their representatives, or deliberations concerning salary schedules for one or more classes of employees.
04/14/26
Village Board

Presenter:

Lead Department: General Government

Executive Summary:

Recommended Action: