WINTER HAVEN
THE CHAIN OF LAKES CITY

CITY COMMISSION MEETING

DATE: Monday, March 10, 2025, 6:00 p.m.

LOCATION: City Hall - John Fuller Auditorium
451 Third Street NW
Winter Haven, FL 33881

---

1. **CALL TO ORDER** - Nathaniel J. Birdsong, Jr., Mayor

2. **ROLL CALL** - Vanessa Castillo, MMC, City Clerk

3. **INVOCATION** - Dr. Steve Harness, First Baptist Church

4. **PLEDGE OF ALLEGIANCE** - Vanessa Castillo, MMC, City Clerk

5. **PRESENTATIONS**

5.A **"Developmental Disability Awareness Month" Proclamation - Kelly Lane, Development Director - Achievement Academy**

Staff Contact: *LaTonya Harris, City Historian & Archivist | Deputy City Clerk, lharris@mywinterhaven.com*

Proclamation

5.B **"Donate Life Month" Proclamation - Christine Daniels, LifeLink Volunteer**

Staff Contact: *LaTonya Harris, City Historian & Archivist | Deputy City Clerk, lharris@mywinterhaven.com*

Proclamation

5.C **"Irish American Heritage Month" Proclamation - Greg Sean Canning, Ancient Order of Hibernians Florida State Secretary**

Staff Contact: *LaTonya Harris, City Historian & Archivist | Deputy City Clerk, lharris@mywinterhaven.com*

Proclamation

5.D **Thompson Nursery Road Project Update - Jay Jarvis, Director, Polk County Roads & Drainage Division**

Staff Contact: *Eric Labbe, Economic Opportunity & Community Investment Director, elabbe@mywinterhaven.com*

6. **DEVELOPMENTS OF NOTE**

7. MINUTES

7.A **February 19, 2025, City Commission Agenda Review Session Meeting Minutes**

Staff Contact: *Vanessa Castillo, MMC, City Clerk, vcastillo@mywinterhaven.com*

2025-02-19 DRAFT Agenda Review Session Minutes with Link

7.B **February 24, 2025, Regular City Commission Meeting Minutes**

Staff Contact: *Vanessa Castillo, MMC, City Clerk, vcastillo@mywinterhaven.com*

2025-02-24 DRAFT Regular City Commission Meeting Minutes with Link

8. COMMENTS FROM THE AUDIENCE

9. ORDINANCE(S) - SECOND READING - PUBLIC HEARING

10. CONSENT AGENDA

10.A **Recommendation for appointment of one (1) new candidate to fill a vacant position on the Airport Advisory Committee**

Staff Contact: *Troy Heidel, Airport Director, theidel@mywinterhaven.com*

Summary - Appointment to Airport Advisory Committee
Committee Application - Robert Aliaga
Committee Application - Mark Barletta
Committee Application - Zach Drum
Committee Application - Rafael Garcia
Committee Application - Janeen Kochan
Committee Application - Steven McCaughey
Committee Application - Bernard Morris

10.B **Agreement to Provide Traffic Control and Enforcement of Private Roads Owned and Under Control of Lucerne Park Community Development District**

Staff Contact: *Donald Nunnery, Captain, dnunnery@mywinterhaven.com*

Summary - Lucerne Park CDD traffic control & enforcement request
Lucerne Park Agreement
Lucerne Park Reserve Map

10.C **Florida Department of Environmental Protection LPA 0212 Grant Amendment #2 Between Polk Regional Water Cooperative and the City of Winter Haven**

Staff Contact: *Gary M. Hubbard, Water Department Director, ghubbard@mywinterhaven.com*

Summary - LPA0212 Amendment between PRWC and Winter Haven
PRWC Heartland Winter Haven Agreement LPA0212 Amendment 2
Exhibit A FDEP LPA0212 - Final Agreement
PRWC Heartland Winter Haven Agreement LPA0212 Amendment 1
Exhibit B PRWC Heartland Winter Haven Agreement LPA0212
Exhibit C-1 FDEP LPA0212 - A1 Executed 3-24-23
Exhibit C-2 FDEP LPA0212 Amendment 2 Executed 9-29-23
Exhibit C-3 FDEP LPA0212 A3 Executed 11-21-24

10.D **Approval of Task Order #1 of the Water Resource Facility at Pollard Road and Wastewater Treatment Plant #2 Abandonment, to Wharton-Smith, Inc. (RFQ-24-18)**

Staff Contact: *Gary M. Hubbard, Water Department Director, ghubbard@mywinterhaven.com*

Summary - Task Order #1 of the Water Resource Facility at Pollard Road
Water Resource Facility - Task Order 1 Initial Conception Planning and Design - Preconstruction Services

10.E **Contract with Ballard Partners for Federal Level Funding Advocacy**

Staff Contact: *T. Michael Stavres, City Manager, mstavres@mywinterhaven.com*

Summary - Ballard Partner Contract
City of Winter Haven - Ballard Partners (Federal) Contract 2025
Affidavits - Ballard Partners

10.F **Purchase of Motorola N30 Radios for Emergency Response and Management**

Staff Contact: *Brittany Hart, Public Works Director, bhart@mywinterhaven.com*

Summary - Purchase of Motorola N30 Radios for Emergency Response and Management
Motorola Solutions Quote

10.G **Purchase of Two Replacement Fire Engines**

Staff Contact: *Drew Neubrand, Fire Chief , Dneubrand@mywinterhaven.com*

Summary - Purchase of Two Replacement Fire Engines
Sutphen Shop Order

11. RESOLUTION(S)

11.A **R-25-03 - Request by KRPC Willowbrook, LLC for final plat approval of the Willowbrook North Subdivision.**

Staff Contact: *Chris Young, Senior Planner, cyoung@mywinterhaven.com*

Summary - Resolution R-25-03
R-25-03

11.B **R-25-09 - Approval of a Public Transportation Grant Agreement with the Florida Department of Transportation (FDOT) for Replacement of the Airport Beacon**

Staff Contact: *Troy Heidel, Airport Director, theidel@mywinterhaven.com*

Summary - R-25-09 Approval of a Public Transportation Grant Agreement with the Florida Department of Transportation (FDOT)
R-25-09 with Exhibit A
Public Transportation Grant Agreement - G3982

11.C **R-25-12 - Request by GE Investments of Polk, LLC for final plat approval of the Crescent Pointe Subdivision.**

Staff Contact: *Chris Young, Senior Planner, cyoung@mywinterhaven.com*

Summary - Resolution R-25-12
R-25-12

12. ORDINANCE(S) - FIRST READING

12.A **O-25-05 - Request by AVID Group, LLC to rezone a parcel from Industrial- Light (I-1) zoning district to Commercial- Highway (C-3) zoning district**

Staff Contact: *Heather Reuter, Senior Planner, hreuter@mywinterhaven.com*

Summary - Ordinance O-25-05
O-25-05

12.B **O-25-13 - Adding a new Section 15-290 of Article VII, Chapter 15, of the Code of Ordinances of the City of Winter Haven, Florida regarding Prohibiting Smoking and Vaping in Public Parks and Public Beaches owned and/or leased by the City of Winter Haven, Florida**

Staff Contact: *Julie Adams, Parks, Recreation & Culture Department Director, jadams@mywinterhaven.com*

Summary - O-25-13
Ordinance O-25-13
Polk County Ordinance 2023-068 adopted on November 7, 2023

13. NEW BUSINESS

14. CITY COMMISSIONERS/LIAISON REPORTS

15. CITY ATTORNEY REPORT

16. CITY MANAGER REPORT

17. DEPUTY CITY MANAGER REPORT

18. CITY CLERK REPORT

19. EMERGENCY MATTERS NOT RECEIVED FOR THE AGENDA

20. ADJOURNMENT

If a person decides to appeal any decision made by the Commission with respect to any matter considered at such meeting or hearing, they will need a record of the proceedings, and that, for such purpose, they may need to ensure that a verbatim record of the proceeding is made which record includes the testimony and evidence upon which the appeal is to be based (FS 286.0105). In accordance with the Americans with Disabilities Act and Florida Statutes, Section 286.26, persons with disabilities needing special accommodations to participate in this proceeding, should contact the City Clerk's Office, 451 Third Street, NW, Winter Haven, Florida 33881, in writing, not later than 48 hours prior to the proceeding; if not in writing, then not later than four (4) days prior to the proceeding at (863) 291-5600. Vision or hearing impaired please call (800) 955-8771 for assistance.

WINTER HAVEN
THE CHAIN OF LAKES CITY

Proclamation

WHEREAS, The Achievement Academy has been serving the community since 1955. Beginning as a small organization started by a group of parents who saw a void in therapy services for children in the community, the United Cerebral Palsy of Polk County was founded. Over the years, the name changed to the Child Development Center to reflect expanded focus to children with a variety of special needs before becoming the Achievement Academy in 2004. During the month of March, the Achievement Academy joins in the recognition of *Developmental Disability Awareness Month*, a national movement seeking to make it a reality that children and adults of all types are succeeding in their education as well as other aspects of life; and

WHEREAS, through two distinct programs: the "Birth to Three" early intervention and the "Exceptional Student Education (ESE) charter Pre-Kindergarten", the Achievement Academy serves more than 350 infants and children in Polk County each year; and

WHEREAS, the highly skilled "Birth to Three" team provides in-home, early intervention services to infants and toddlers throughout Polk County, working directly with the child and their caregiver to help children who are at-risk for developmental delays achieve appropriate milestones; and

WHEREAS, the "ESE Charter Pre-Kindergarten" team are experts in providing a quality education, individual therapies, and family support to children ages 18 months through 5 years old who have one or more diagnosed challenges. Becoming a public charter school in 1997, Achievement Academy is one of the longest established charter schools in the State of Florida with 157 children enrolled across three campuses; and

WHEREAS, with early intervention, quality education, therapies, and family support, they strive to completely change the trajectory of a child's educational path, preparing them for a successful future. The mission, at its core, is based upon empowering children to achieve their own personal maximum potential in order to better prepare them for their education and their future.

NOW, THEREFORE, I, Nathaniel J. Birdsong, Jr., Mayor of the City of Winter Haven, Florida, do hereby proclaim March 10, 2025, as

DEVELOPMENTAL DISABILITY AWARENESS MONTH

in the City of Winter Haven.

IN WITNESS WHEREOF, I have hereunto set my hand and cause the Seal of the City of Winter Haven, Florida, to be affixed this 10th day of March 2025.



Nathaniel J. Birdsong, Jr.
Nathaniel J. Birdsong, Jr., Mayor

ATTEST:
Vanessa Castillo
Vanessa Castillo, MMC, City Clerk

WINTER HAVEN
THE CHAIN OF LAKES CITY

Proclamation

WHEREAS, One of the most meaningful gifts that a human being can bestow upon another is the gift of life; and

WHEREAS, over 104,000 men, women and children are currently on the national waiting list for organ transplantation, of which over 5,500 reside in Florida; and

WHEREAS, 48,149 organ transplants, a historic number, occurred in the United States in 2024 thanks to the generosity of 24,018 deceased and living donors, of which LifeLink® of Florida honored more donors than ever before serving 361 organ donors who provided 936 lifesaving transplants to patients in need; and

WHEREAS, more than 2.5 million people throughout the country, including Florida, benefit annually from tissue transplantation thanks to thousands of tissue donors; and

WHEREAS, the need for organ, eye, and tissue donation remains critical as a new patient is added to the national waiting list for an organ transplant every 8 minutes and each day roughly 16 people die due to the lack of available organs; and

WHEREAS, more than 11.1 million Floridians have already registered their decision to give the gift of life through organ and tissue donation at www.DonateLifeFlorida.org or on their driver's license; and

WHEREAS, Lifelink® of Florida, is a non-profit organization dedicated to the recovery of organs and tissue for transplantation therapy in Florida, with a mission to honor donors and save lives through organ and tissue donation.

NOW, THEREFORE, I, Nathaniel J. Birdsong, Jr., Mayor of the City of Winter Haven, Florida, do hereby recognize the week of April 2025, as

"Donate Life Month"

in the City of Winter Haven and encourage all residents to consider leaving an infinite legacy through organ donation and sign up at www.mystorycontinues.com or when renewing their driver's license or state identification card.

IN WITNESS WHEREOF, I have hereunto set my hand and cause the Seal of the City of Winter Haven, Florida, to be affixed this 10th day of March, 2025.

WINTER HAVEN FLORIDA CORPORATE SEAL

Nathaniel J. Birdsong, Jr.

Nathaniel J. Birdsong, Jr., Mayor

ATTEST:

Vanessa Castillo

Vanessa Castillo, MMC, City Clerk

WINTER HAVEN
THE CHAIN OF LAKES CITY

Proclamation

WHEREAS, by 1776, nearly 300,000 Irish nationals had emigrated to the American colonies and played a crucial role in America's War for Independence. Five signers of the Declaration of Independence were of Irish descent and three signers were Irish-born. Irish-Americans helped to fashion a system of government for our young Nation. In fact, twenty-two Presidents have proudly proclaimed their Irish-American heritage; and

WHEREAS, in 1792, Irish-born James Hoban provided the architectural plans for the White House and served as one of the supervising architects for the construction of the Capitol; and

WHEREAS, Irish-born Commodore John Barry was recognized by the United States Congress in September of 2002 as the "First Flag Officer of the United States Navy". Commodore John Barry fought the last sea battle of the American Revolution off the coast of Florida; and

WHEREAS, in 1813, Captain Oliver Perry, an Irish-American, achieved a major naval victory in the Battle of Lake Erie; and

WHEREAS, in 1942, the 5 Sullivan brothers made the ultimate sacrifice for democracy and freedom during the Naval Battle of Guadalcanal and later had the Destroyer USS Sullivan commissioned in their memory; and

WHEREAS, The Irish first came to Spanish "La Florida" in the 1500s - first as missionaries and mercenary soldiers, and then as planters, traders, businessmen, doctors and administrators. Three of the Spanish Governors of "La Florida" were actually Irish military officers; and

WHEREAS, Father Richard Arthur, an Irish-born priest from Limerick who was appointed parish priest for St. Augustine in 1597 and ecclesiastical judge of "La Florida", established the first public school in America and opened it to both boys and girls of all races; and

WHEREAS, President Andrew Jackson, whose family came from County Antrim, served as Florida's military governor following its acquisition by the United States; and

WHEREAS, Irish-Americans, since America's inception, have provided and continue to provide leadership and service to this nation's political, business and religious establishments. Therefore, it is fitting and proper to celebrate the rich cultural heritage and the many valuable contributions of Irish-Americans.

NOW, THEREFORE, I, Nathaniel J. Birdsong, Jr., Mayor of the City of Winter Haven, Florida, do hereby recognize March 2024, as

"Irish American Heritage Month"

in the City of Winter Haven, Florida.

IN WITNESS WHEREOF, I have hereunto set my hand and cause the Seal of the City of Winter Haven, Florida, to be affixed this 10th day of March, 2025.



Nathaniel J. Birdsong, Jr.
Nathaniel J. Birdsong, Jr., Mayor

ATTEST:
Vanessa Castillo
Vanessa Castillo, MMC, City Clerk

WINTER HAVEN
THE CHAIN OF LAKES CITY

CITY COMMISSION AGENDA REVIEW SESSION MINUTES

DATE: Wednesday, February 19, 2025, 5:30 p.m.

LOCATION: City Hall – John Fuller Auditorium
451 Third Street NW, Winter Haven, FL 33881

NOTE:
PowerPoint slides of certain agenda items were also presented during this meeting. Link to PowerPoint here:
https://acrobat.adobe.com/id/urn:aaid:sc:VA6C2:f23894a4-6748-4f33-aa15-fcf8fc1517f2
A hard copy of the PowerPoint will be attached to the original signed minutes.

1. CALL TO ORDER - Mayor Birdsong called the meeting to order at 5:30 p.m.

2. ROLL CALL - Vanessa Castillo, MMC, City Clerk

Commissioners Present: Mayor Nathaniel J. Birdsong, Jr.; Mayor Pro Tem Brian Yates; Commissioner Tracy Mercer; and Commissioner Clifton E. Dollison.

Commissioners Absent: Commissioner Bradley T. Dantzler

Staff Present: City Manager T. Michael Stavres; Deputy City Manager Michael "M.J." Carnevale; City Attorney John Murphy; City Clerk Vanessa Castillo; Assistant City Manager for Public Safety Charlie Bird; Smart City Office Hiep Nguyen; Economic Opportunity and Community Investment Director Eric Labbe; Winter Haven Water Director Gary Hubbard; Parks, Recreation and Culture Director Julie Adams; Public Affairs and Communications Director Katrina Hill; Chief Financial Officer Colleen "C.J." Scott; and Fire Chief Drew Neubrand.

5. PRESENTATION(S) - None

6. DEVELOPMENTS OF NOTE - None

7. MINUTES - None

8. COMMENTS FROM THE AUDIENCE – N/A

9. ORDINANCE(S) – SECOND READING – PUBLIC HEARING

A. O-25-01 - Request by Regional Real Estate Management LLC to assign Neighborhood Support Future Land Use to an annexed parcel

B. O-25-02 - Request by Regional Real Estate Management LLC to assign Commercial- Highway (C-3) zoning district to an annexed parcel

C. O-25-08 - Voluntary annexation of 807 Snively Avenue

D. O-25-09 - Budget Ordinance

There were no questions or discussion.

E. O-25-10 - City Seal Update

DRAFT

City Manager Stavres gave an overview of this item and noted that the colorized version on the screen had been edited to reflect the City's current color palette [brand colors]. He added that a copy of the version with colors would be available for the February 24, 2025, Regular City Commission Meeting.

10. CONSENT AGENDA

A. Purchase of Kando Pulse Wastewater Monitoring Solutions Subscription (Boulder, CO)

City Manager Stavres gave an overview of this item and asked Winter Haven Water Director Hubbard how a slug, spill, or contamination would be detected. Director Hubbard explained that this was looking more at the characteristics of the wastewater flow itself and gave an example of how people dumped septic tanks in the past, which he explained in more detail. Discussion ensued.

Commissioner Mercer inquired if this was going to be like the manholes where it would measure the flow through the lines or would it be located somewhere else. Director Hubbard said it would be located in key manholes throughout the system so that staff could determine what was happening. They would start with about four sensors, then expand to 10-12 sensors throughout the system.

Commissioner Mercer asked if the wastewater system had a certain lift station that tied in and if staff would be able to trace all of that. Director Hubbard said yes.

Mayor Birdsong inquired if this needed to be continued every year. City Manager Stavres said that this was a very innovative approach, proactive and helped insured the integrity of our systems. He added that the City staff would learn it through the first year, which would provide great data and give City staff an idea on how best to proceed, but it would come back year over year.

B. Owner Direct Purchase of Sewer Lift Station By-Pass Pumps for LS #119 and LS#191

City Manager Stavres gave an overview of this item.

There were no questions or discussion.

C. Authorization for Travel & Training - 2025 Washington, DC Legislative Trip (Birdsong, Yates, Dollison, Stavres, Carnevale & Hill)

City Manager Stavres gave an overview of this item.

There were no questions or discussion.

11. RESOLUTION(S)

A. R-25-07 - Request by LGI Homes-Florida, LLC to release the subdivision Performance Bond and confirming acceptance of improvements, infrastructure, and dedications in favor of the Public/City of Winter Haven for the Peach Crossings Subdivision

City Manager Stavres gave an overview of this item.

There were no questions or discussion.

B. R-25-08 - Request by ERPC Peace Creek, LLC for final plat approval of the Annabelle Estates Subdivision

City Manager Stavres gave an overview of this item.

There were no questions or discussion.

12. ORDINANCE(S) - FIRST READING - None

13. NEW BUSINESS

A. Purchase of Accela, Selectron, and Byrne Permitting and Licensing Software Solutions for the Building Division

City Manager Stavres gave an overview of this item.

Economic Opportunity and Community Investment Labbe noted that the typical implementation was 6-9 months, however, since the City was using Polk County's template, it would take approximately four months. Discussion ensued.

14. CITY COMMISSIONERS/LIAISON REPORTS – No report

15. CITY ATTORNEY REPORT – No report

16. CITY MANAGER REPORT

A. Grant & Aid Application Review Committee (GAARC) Update and Request for Guidance

City Manager Stavres thanked Public Affairs and Communications Director Hill and her team that helped navigate this process, which had improved over the years. He reported that two of the three mandatory training sessions had already concluded and the third one would take place this Saturday, February 22, 2025, at 10:00 a.m. He added that 92 people had attended the first two sessions representing 72 different organizations and 45 were registered for this weekend in comparison to last year, where 64 organizations attended training so now more people were pursuing the program. He explained that the training consisted of a PowerPoint presentation that went over the application and staff was available for questions. He also commended GAARC Chair Alex Santiago for attending both training sessions and gave comments and guidance to the applicants.

City Manager Stavres asked the Commission for clarification and direction [for the GAARC] on how to address funding requests that came in from schools. He added that they had seen this from public and charter schools last year and he anticipated that this year the City could receive requests from these, although they were governmental entities applying for grant funds from the City. He also asked the Commission for clarification and direction on how to address requests from other organizations that have established functioning foundations, such as the Winter Haven Hospital Foundation and the Polk State College (PSC) Foundation who had both applied for funds in the past.

Mayor Birdsong said the believed that the posture of the Commission in the past was to stay away from [giving funding to] schools and foundations.

Mayor Pro Tem Yates said he concurred with Mayor Birdsong regarding schools because they had their own mechanisms of funding and asked City Manager Stavres for clarification on the requests from foundations. City Manager Stavres explained that last year the City had received a request from the PSC Foundation for a specific program that they wanted to do so a check was cut to the PSC Foundation and that the application was tied specifically to a program within that application. He believed that the one for the Winter Haven Hospital Foundation was for another program. Director Hill added that the City had received two applications from PSC: one from the school and the other from the PSC Foundation. One application requested funding for an athletic program while the other was for a clothing program in partnership with Top Buttons. She noted that both entities had attended training again.

Mayor Pro Tem Yates expressed concerns with this and said PSC and Winter Haven Hospital had their own mechanisms for funding and raising funds. He added that he worried about unintended consequences of someone establishing a foundation and believed that this situation was a tough one. City Manager Stavres said it could be left in if the Commission wanted and just have the GAARC review the actual programs from the foundation requests, which he explained further. Discussion ensued regarding schools that had applied in the past.

Mayor Pro Tem Yates said he preferred funding kidsPACK, Inc. and entities providing services for schools and not schools directly because schools could have their own fundraisers and apply for different grants and funding that the City did not have access to through the state and federal levels. He expressed concerns with the influx of applicants causing money to be stretched thin.

Mayor Birdsong, Commissioner Mercer and Commissioner Dollison said they concurred with Mayor Pro Tem Yates.

City Manager Stavres said he believed the City had six different agencies they referred to as some of our "legacy agencies" that had been funded at relatively higher levels for a historic period of time and which the Commission had continued to fund even through 2024:

- $20,000 - The Public Education Partnership of Winter Haven, Inc. (PEP)
- $20,000 - Girls, Inc. of Winter Haven
- $20,000 - The Neighborhood Service Center
- $45,000 - The Boys and Girls Club, Inc.
- $20,000 – Meals on Wheels, Inc.
- $20,000 – The Haley Center

City Manager Stavres clarified that these were going back to before the City opened up the process and which historically, the Commission had funded. He asked the Commission if they wanted these considered at historical levels once the GAARC deliberated on all of the applications or if they wanted to bring the numbers down to fund more people.

Mayor Pro Tem Yates inquired where the City was budget-wise with the number allocated this year. City Manager Stavres said we did not have this as of yet, but that last year the City had funded $316,000, which was the highest year yet. He explained that he usually went into the process with the dollar amount from the prior year unless the Commission wanted that increased. If so, then staff would need to fund the money as they began the budgeting process. He explained that last year the dollar amount began at $305,000, but increased to $316,000 based on feedback from the Commission, which he explained further.

Mayor Pro Tem Yates asked if the City was still earning interest on the money in the General Fund at the state level, asked if it included the Reserve Fund, and if the City was budgeting for those gains of interest. City Manager Stavres said that the City was very conservative with interest earnings in terms of forecasting. Chief Financial Officer Scott said that the City's cash was transferred over to the SBA (State Board Administration) and earned interest and then based on each fund and what their cash balance was, they were going to get an allocation of the interest earnings. She explained that when budgeting, the City budgeted really low and right now we were getting approximately 4.5% in interest earnings so we do reflect an earnings revenue in the budget. Discussion ensued.

Mayor Birdsong commented that if we increased the number last year, then the City would receive more applications so the City set a policy in place where new agencies would be limited in the amount they would receive. City Manager Stavres confirmed this. Mayor Birdsong added that he wanted to see the number kept the same as last year [at $316,000] and see what the requests equated to this time. Mayor Pro Tem Yates said he was concerned and expressed that the sooner they could get the committee an idea of what dollar amount they would be working with, the easier it was for them to function and distribute the funds as requested.

Mayor Birdsong asked when the GAARC would receive all of the applications. Public Affairs and Communications Director Hill reported that the application window would close on March 14 and then they would have to input a new step in the process this year where they would work with anyone who is not meeting all of the requirements and give them two weeks to correct their applications if they had any issues. That window would close on April 11 and the GAARC would receive their binders on April 17.

Commissioner Mercer agreed that the City should start out with the same amount because we did not know how many applications would come in or what the future could bring in terms of grant funding. She added that if there was a demand for more money, funding could be increased at that time.

Mayor Birdsong said he understood the point made by Mayor Pro Tem Yates, but given the application scheduling, the Commission had time to do that and have more information to come up with a total amount. He clarified this further. Director Hill explained that applicants are given caps to what they can apply for based on if they were a new or returning applicant. Staff also lets them know that the final budget has not been determined yet so they cannot guarantee any funding to any specific amount . She noted that by March 14th City staff would know how many applications were submitted and how much funding was requested. She also noted that binders did not go to the GAARC until April 17th because the time in between was used for fact checking and corrections, but that there was a window there to provide additional details. Mayor Pro Tem Yates requested to place this as a discussion item on the March 24, 2024, Regular City Commission Meeting agenda to have a better understanding of what might be available to add to the budget. City Manager Stavres discussed the biggest challenge being parameters, budgeted money, legacy partners, and priorities.

City Manager Stavres said that the direction that the GAARC was given in the past was to try and help as many organizations as possible with smaller awards versus a handful with larger awards.

Commissioner Dollison said that in terms of the legacy agencies, one of the questions was whether or not the City wanted to maintain that level or make adjustments. He added that he did not know how the legacy partners were originally established and whether or not that should be maintained every year or evaluated or given others an opportunity, which he explained in more detail. City Manager Stavres agreed and said that when the program started, the Commission had given direction to opening up the application and setting caps, those that were funded at higher levels not be reduced down to that, which he explained further. He noted that it was opened to outside applications within the last five or six years so they were historically funded. Mayor Birdsong explained that most of the legacy agencies had been funded the last twenty years at a higher level, but over the years, funding was reduced and never elevated to what they were years ago. Discussion ensued regarding the Commission's funding history of these agencies.

Mayor Pro Tem Yates inquired if kidsPACK, Inc. had applied in the usual process. City Manager Stavers said yes and that they had been an applicant of the past couple of years. Director Hill concurred that they had been a consistent applicant since the process began. Mayor Pro Tem Yates said he knew they were not a legacy agency but

an argument could be made that they should since they were such an invaluable program to students. He also said that he wanted to make sure that the GAARC did not go too long wondering what the Commission wanted to do. He said it was not an easy job for them, but that the Commission wanted to make it as easy as they could, so they could bring any questions to the Commission at the next available meeting. Mayor Birdsong said they really appreciated all of their work because the Commission had to do it before.

City Manager Stavres noted that staff had a chance to meet with Dr. Barbara Jones [appointed to the GAARC at the January 27, 2025, Regular City Commission Meeting] at an orientation two weeks ago and she had picked right up on it and would be a great member of the committee. He concluded with saying that staff now had preliminary guidance from the Commission and that the number of applicants and their total ask would be brought forward to them, as well as, seek further clarification on dollar amount and Commission priorities.

❖

City Manager Stavres showed several slides of photos taken last night of the lit ballfields at Chain of Lakes Park: pointed out the retention pond in the background and the bridge of U.S. 17 going over the canal; field one looking back towards the high-rise in the distance and the Holiday Inn Hotel; the common areas around the fields; and the area outside the concrete that would be mulched; the field level had no "spill" from the lights so you could see the background beyond the outfield fence that was not lit up like the old lights. He added that a tournament would kick off this weekend and then RussMatt Baseball kicking off next weekend until mid-March.

❖

City Manager Stavres showed week-old drone footage (https://mywinterhaven.sharefile.com/public/share/web-sa6c360343fef4fd18dc0c0ae6a48731e) of the Winter Haven Recreation and Cultural Center (WHRCC) construction site and explained the various views.

Commissioner Dollison asked about the size of the gymnasium. Parks, Recreation, and Culture Director Adams said it might be closer to 17,000 square feet. Discussion ensued.

Discussion ensued regarding walls, tilt walls, reliefs on walls, and walls poured on site.

Mayor Pro Tem Yates asked about field lighting [at Chain of Lakes Park] and if staff tested the field from the standpoint of hitting a ball into the outfield since lighting could be tricky in baseball. Director Adams said they were going with the industry standard and that the lighting provider for that project was Musco [Sports Lighting]. She explained that the City's team visited other ballfields where these same lighting systems were installed and had those questions for the programmers and operators of those systems, which she explained further. Discussion ensued. City Manager Stavres also commented on the angle of the photo that made it appear darker and explained lighting in more detail. Discussion ensued regarding foot candles, infield and outfield, and digital lighting.

Commissioner Dollison asked if Mayor Birdsong would be throwing out the first pitch. Parks, Recreation and Culture Director Adams said he needed to be warming up now. Mayor Birdsong commented that he used to pitch and said he threw out the first pitch at the [Tampa Bay] Rays [baseball] game on "Winter Haven Day". Discussion ensued.

17. DEPUTY CITY MANAGER REPORT – No report

18. CITY CLERK REPORT – No report

19. EMERGENCY MATTERS NOT RECEIVED FOR THE AGENDA – None

20. ADJOURNMENT – 6:18 p.m.

ATTEST:

Vanessa Castillo, MMC
City Clerk

CITY OF WINTER HAVEN, FLORIDA

Nathaniel J. Birdsong, Jr.
Mayor

DRAFT

WINTER HAVEN
THE CHAIN OF LAKES CITY

REGULAR CITY COMMISSION MEETING MINUTES

DATE: Monday, February 24, 6:00 p.m.

LOCATION: City Hall – John Fuller Auditorium
451 Third Street NW, Winter Haven, FL 33881

NOTE:
PowerPoint slides of certain agenda items were also presented during this meeting. Link to PowerPoint here:
https://acrobat.adobe.com/id/urn:aaid:sc:VA6C2:c0a88caf-1bea-4ed4-9287-89b2376dc7b5
A hard copy of the PowerPoint will be attached to the original signed minutes.

1. **CALL TO ORDER** - Mayor Birdsong called the regular meeting to order at 6:00 p.m.

2. **ROLL CALL** - Vanessa Castillo, MMC, City Clerk

   Commissioners Present: Mayor Nathaniel Birdsong; Mayor Pro Tem Brian Yates; Commissioner Brad Dantzler; Commissioner Tracy Mercer; and Commissioner Clifton Dollison.

   Staff Present: City Manager T. Michael Stavres; City Attorney John Murphy; Deputy City Manager Michael "M.J." Carnevale; City Clerk Vanessa Castillo; Assistant City Manager for Public Safety Charlie Bird; Smart City Officer Hiep Nguyen; Economic Opportunity and Community Investment Director Eric Labbe; Winter Haven Water Director Gary Hubbard; Chief Financial Officer Colleen "C.J." Scott; Public Works Director Brittany Hart; and Fire Chief Drew Neubrand.

3. **INVOCATION** – Bishop Joe Halman, Greater Works Ministries

4. **PLEDGE OF ALLEGIANCE** – Vanessa Castillo, MMC, City Clerk

5. **PRESENTATION(S)** – None

6. **DEVELOPMENTS OF NOTE** – None

7. **MINUTES**

   A. February 5, 2025, City Commission Agenda Review Session Meeting Minutes

   B. February 10, 2024, Regular City Commission Meeting Minutes

   Motion by Mayor Pro Tem Yates to approve the minutes as presented.

   Mayor Birdsong stated that anyone wishing to speak to the minutes could make comments now by coming to the podium and stating their name and address for the record and make comments. No one spoke for or against.

   Motion carried 5:0.

DRAFT

8. COMMENTS FROM THE AUDIENCE

B.J. Mannix, Owner of Mannix Pools and Grills and on behalf of the 501(c)(3) non-profit organization Southern Charities Group, Inc., requested a sponsorship from the City for their upcoming *Grillfest* (formerly *Chain of Lakes Eggfest*) on March 28-29, 2025, that would benefit Girls, Inc. and waive the stage rental fee for their *Smoke Off the Water* event held on February 7-8, 2025, that benefited the Humane Society of Polk County. He noted that their cost for renting stages from the City was $1,985 for *Smoke Off the Water* and $1,586 for *Grillfest*.

Discussion ensued.

Motion by Commissioner Yates to waive fees for an in-kind sponsorship for the *Smoke Off the Water* and *Grillfest* events.

Discussion ensued regarding grant and aid and setting a precedence.

Mayor Pro Tem Yates withdrew his previous motion.

Motion by Commissioner Yates to contribute $1,000 to the Southern Charities Group, Inc. for the 2025 *Grillfest* event.

Motion carried 5:0.

Discussion ensued regarding agencies and the Commissioners needing to set a limit.

9. ORDINANCE(S) – SECOND READING – PUBLIC HEARING

A. O-25-01 - Request by Regional Real Estate Management LLC to assign Neighborhood Support Future Land Use to an annexed parcel

City Attorney Murphy read Ordinance O-25-01 by title only. City Manager Stavres said there had been no change since first reading.

Motion by Mayor Pro Tem Yates to approve Ordinance O-25-01 on second reading – public hearing.

Mayor Birdsong closed the Regular City Commission Meeting and opened a Public Hearing stating anyone wishing to speak to this Ordinance may come to the podium and state their name and address for the record. No one spoke for or against.

Mayor Birdsong closed the Public Hearing and reopened the Regular Commission Meeting.

Motion carried 5:0.

B. O-25-02 - Request by Regional Real Estate Management LLC to assign Commercial- Highway (C-3) zoning district to an annexed parcel

City Attorney Murphy read Ordinance O-25-02 by title only and City Manager Stavres presented.

Motion by Commissioner Mercer to approve Ordinance O-25-02 on second reading – public hearing.

Mayor Birdsong closed the Regular City Commission Meeting and opened a Public Hearing stating anyone wishing to speak to this Ordinance may come to the podium and state their name and address for the record. No one spoke for or against.

Mayor Birdsong closed the Public Hearing and reopened the Regular Commission Meeting.

Motion carried 5:0.

C. O-25-08 - Voluntary annexation of 807 Snively Avenue

City Attorney Murphy read Ordinance O-25-08 by title only and City Manager Stavres presented.

Motion by Commissioner Mercer to approve Ordinance O-25-08 on second reading – public hearing.

Mayor Birdsong closed the Regular City Commission Meeting and opened a Public Hearing stating anyone wishing to speak to this Ordinance may come to the podium and state their name and address for the record. No one spoke for or against.
Mayor Birdsong closed the Public Hearing and reopened the Regular Commission Meeting.

Motion carried 5:0.

D. O-25-09 - Budget Ordinance

City Attorney Murphy read Ordinance O-25-09 by title only and City Manager Stavres presented.

Motion by Commissioner Mercer to approve Ordinance O-25-09 on second reading – public hearing.

Mayor Birdsong closed the Regular City Commission Meeting and opened a Public Hearing stating anyone wishing to speak to this Ordinance may come to the podium and state their name and address for the record. No one spoke for or against.

Mayor Birdsong closed the Public Hearing and reopened the Regular Commission Meeting.

Motion carried 5:0.

E. O-25-10 - City Seal Update

City Attorney Murphy read Ordinance O-25-10 by title only and City Manager Stavres presented.

Motion by Commissioner Mercer to approve Ordinance O-25-10 on second reading – public hearing.

Mayor Birdsong closed the Regular City Commission Meeting and opened a Public Hearing stating anyone wishing to speak to this Ordinance may come to the podium and state their name and address for the record. No one spoke for or against.

Mayor Birdsong closed the Public Hearing and reopened the Regular Commission Meeting.

Motion carried 5:0.

10. CONSENT AGENDA

A. Purchase of Kando Pulse Wastewater Monitoring Solutions Subscription (Boulder, CO)

B. Owner Direct Purchase of Sewer Lift Station By-Pass Pumps for LS #119 and LS#191

C. Authorization for Travel & Training - 2025 Washington, DC Legislative Trip (Birdsong, Yates, Dollison, Stavres, Carnevale & Hill)

Motion by Mayor Pro Tem Yates to approve the Consent Agenda as presented.

Mayor Birdsong stated anyone wishing to speak to the consent agenda could come to the podium and state their name and address for the record. No one spoke for or against.

Motion carried 5:0.

11. RESOLUTION(S)

A. R-25-07 - Request by LGI Homes-Florida, LLC to release the subdivision Performance Bond and confirming acceptance of improvements, infrastructure, and dedications in favor of the Public/City of Winter Haven for the Peach Crossings Subdivision

City Attorney Murphy read Resolution R-25-07 by title only and City Manager Stavres presented.

Motion by Commissioner Mercer to approve Resolution R-25-07.

Mayor Birdsong closed the Regular City Commission Meeting and opened a Public Hearing stating anyone wishing to speak to this Resolution may come to the podium and state their name and address for the record. No one spoke for or against.

Mayor Birdsong closed the Public Hearing and reopened the Regular Commission Meeting.

Motion carried 5:0.

B. R-25-08 - Request by ERPC Peace Creek, LLC for final plat approval of the Annabelle Estates Subdivision

City Attorney Murphy read Resolution R-25-08 by title only and City Manager Stavres presented.

Motion by Commissioner Mercer to approve Resolution R-25-08.

Mayor Birdsong closed the Regular City Commission Meeting and opened a Public Hearing stating anyone wishing to speak to this Resolution may come to the podium and state their name and address for the record. No one spoke for or against.

Mayor Birdsong closed the Public Hearing and reopened the Regular Commission Meeting.

Motion carried 5:0.

12. ORDINANCE(S) - FIRST READING – None

13. NEW BUSINESS

A. Purchase of Accela, Selectron, and Byrne Permitting and Licensing Software Solutions for the Building Division

City Manager Stavres presented this item as detailed in the summary sheet.

Motion by Mayor Pro Tem Yates to approve the purchase of Accela, Selectron, and Byrne Permitting and Licensing Software Solutions for the Building Division.

Mayor Birdsong closed the Regular City Commission Meeting and opened a Public Hearing stating anyone wishing to speak to this item could come to the podium and state their name and address for the record. No one spoke for or against.

Mayor Birdsong closed the Public Hearing and reopened the Regular Commission Meeting.

Motion carried 5:0.

14. CITY COMMISSIONERS/LIAISON REPORTS

Commissioner Mercer reported the following: attended a Polk County Transportation Planning Organization (TPO) Board Meeting and an orientation for being on the committee as a third member; attended the Ridge League of Cities (RLC) Dinner Meeting hosted by the City of Haines City; and attended the Kiwanis Club of Winter Haven *Annual Pancake Bash*.

Commissioner Dantzler reported that he had attended the Friends of the Library reception and gave greetings.

Commissioner Dollison – No report

Mayor Pro Tem Yates reported the following: attended a TPO Board Meeting and discussed the layouts for the Thompson Nursery Road Project and the eastern leg of the Polk Parkway.

There was consensus of the Commission to send two separate letters of support from the City:

- **To the Polk County Board of County Commissioners (BoCC), with a copy to the Polk County Transportation Planning Organization (TPO), for the Thompson Nursery Road Project in support of multi-use lanes separated from the main travel lanes.**

- **To the TPO, the Turnpike Authority, and FDOT, with a copy to the BoCC, in support of decisions on the Eastern leg of the Polk Parkway bypass that would have the least impact on Bok Tower Botanical Gardens.**

Mayor Birdsong reported the following: chaired a meeting of the Central Florida Regional Planning Council (CFRPC); attended a Polk Regional Water Cooperative (PRWC) special meeting where eminent domain, deep wells, a plant, and water lines were discussed, however, there were property owners contesting the taking action.

15. CITY ATTORNEY REPORT – None

16. CITY MANAGER REPORT

A. Commission Liaison for 6th Street SW, Complete Street Design RFQ

City Manager Stavres presented this item and requested a Commission liaison.

Commissioner Mercer agreed to serve.

❖

City Manager Stavres reported that the annual Polk County Legislative Delegation Meeting, in advance of going into [legislative] session and where the County, municipalities, the Polk County School Board (PCSB), other non-profits and governmental entities, and citizens share their concerns, would be held this Thursday, February 27, 2025, at 1:00 p.m. at the Polk County Board of County Commissioners (BoCC) Building in Bartow. Mayor Pro Tem Yates would be representing the City of Winter Haven to speak and the focus would be on the City's legislative agenda already discussed with the Commission. There were a number of legislative bills staff was tracking in addition to what was on the legislative platform. Staff was staying breast of what was in the Governor [DeSantis] budget proposal, which spoke to some funding they had talked about for programs like Florida Community Trust, Florida Recreation Development Assistance Program, arts and culture grant programs, which were presently within the Governor's budget and they would continue to advocate that they remain in the final budget. Lastly, staff would follow back up with any comments from that meeting.

City Manager Stavres also reported that the first pitch ceremonial kickoff opening for the RussMatt Baseball Tournament would take place this Saturday, March 1, 2025, at the Chain of Lakes Park baseball facilities. The event would start at 9:00 a.m. at the picturesque field #3 with Lake Lulu in the background, however, he asked the Commission to report there no later than 8:45 a.m. He noted that comments would be given by Mayor Birdsong and Polk County Commissioner Martha Santiago from the BoCC. Lastly, he discussed lighting, how a recent tournament gave a good test run on the facility, said that the fields were in tip-top shape, parking was functioning well despite multiple events going on, and that restaurants and hotels in Winter Haven would be bustling due to all of the activity.

Lastly, City Manager Stavres said he would be traveling out-of-state tomorrow to attend the International City/County Management Association (ICMA) Local Government Reimagined Conference [in Denver, Colorado]. In his absence, Deputy City Manager Carnevale and Assistant City Manager of Public Safety Bird would be in charge of City operations.

17. DEPUTY CITY MANAGER REPORT

Deputy City Manager Carnevale reported that there was much happening at the federal level that staff was tracking, particularly grants and said that the City received much federal funding for airport projects, transportation projects, Community Development Block Grant (CDBG) funding, fire department grants and a number of other projects. However, the City started to have temporary stop orders on most of our grants that we received recently and then actual terminations last week the first being the Urban Forestry Grant, which was disappointing. The City had that money budgeted at a 50% match on that and they had contractors on board so staff was continuing to push ahead with these efforts with funding at a diminished level. Staff would continue to work on other funding strategies there, but since that took a big hit, the others being closely watched right now were the micro transit funding that the City had lined up for downtown, the Safe Streets grant for creating pedestrian improvements in school zones and the like, and the congressional appropriations we have received.

City Manager Stavres added that being a community of 60,000, the City of Winter Haven was feeling the pain like everyone else with what happened at the federal level. He added that there was a pause on some grants that continued to move forward, but wanted the Commission to be aware when the City received a termination letter for a specific grant.

18. CITY CLERK REPORT – None

19. EMERGENCY MATTERS NOT RECEIVED FOR THE AGENDA – None

20. ADJOURNMENT – 6:58 p.m.

ATTEST:

Vanessa Castillo, MMC
City Clerk

CITY OF WINTER HAVEN, FLORIDA

Nathaniel J. Birdsong, Jr.
Mayor

DATE: February 19, 2025

TO: Honorable Mayor and City Commissioners

VIA: T. Michael Stavres, City Manager
M.J. Carnevale, Deputy City Manager

FROM: Troy Heidel, Airport Director

SUBJECT: Recommendation for appointment of one (1) new candidate to fill a vacant position on the Winter Haven Airport Advisory Committee

---

BACKGROUND

The City Commission established the Airport Advisory Committee (AAC) through the adoption of Ordinance O-13-04 in February 2013. The AAC was later re-established in 2016 via Ordinance O-16-07. On May 22, 2023, the City Commission passed Ordinance O-23-14, amending Chapter 2, Article II, Sections 2-69 through 2-71, as they pertain to the AAC. Accordingly, the AAC consists of five voting members.

On May 23, 2022, the City Commission approved the appointment of Tim Hubble to Seat #5 for a term of three (3) years. Mr. Hubble submitted his letter of resignation from the Airport Advisory Committee, effective September 11, 2024, due to his change in tenancy at Winter Haven Regional Airport.

The Winter Haven Regional Airport Advisory Committee announced the opening of the application window for the vacant advisory seat during the month of December. This thirty-one (31)-day period provided an opportunity for interested individuals to submit applications to contribute to the growth and success of the airport. By the close of the application window, the committee received a total of seven (7) applications, reflecting strong community interest in serving and supporting the airport's mission. The following applications were received as part of this solicitation process:

- Janeen Kochan
- Bernard Morris
- Robert Aliaga
- Steven McCaughey
- Rafael Garcia
- Mark Barletta
- Zach Drum

The Airport Advisory Committee convened a special meeting on February 7, 2025, to interview selected applicants. During the meeting, the committee reviewed each candidate's background and experience, including potential conflicts of interest. After the interviews, the committee made a motion, which was seconded and passed unanimously, to recommend Zach Drum for Seat #5.

Zach Drum is a Winter Haven resident with a strong background in aviation, having served as a combat-proven United States Naval Aviator. With over 1,800 mishap-free flight hours and 400 carrier-arrested landings, his experience includes roles as a Navy strike fighter pilot, instructor, and tactical demonstration pilot. As a Winter Haven native and active pilot, Zach is eager to contribute to the community by joining the Airport Advisory Committee.

FINANCIAL IMPACT

There is no financial impact.

STRATEGIC PLAN ALIGNMENT

- This is a routine action associated with normal operations of the City not specifically defined as a goal or strategy within the Strategic Plan. However, it is aligned with the Responsible Government Strategic Pillar

RECOMMENDATION

Staff recommends the City Commission accept the recommendation of the Airport Advisory Committee and appoint Zach Drum as an Airport Advisory Committee Member (Seat #5 expires August, 2025)

ATTACHMENTS

- Committee Application – Robert Aliaga
- Committee Application – Mark Barletta
- Committee Application – Zach Drum
- Committee Application – Rafael Garcia
- Committee Application – Janeen Kochan
- Committee Application – Steven McCaughey
- Committee Application – Bernard Morris

WINTER HAVEN
The Chain of Lakes City

BOARD/COMMITTEE APPOINTMENT INFORMATION

Board(s) or Committee(s) Desired: 1) Airport Advisory Committee

2) _____

3) _____

Name: Aliaga (Last) Robert (First) Daniel (Middle)

Address: (Home) 2355 Pine Meadows Pl. Chuluota, FL 32766

(Mailing) _____

(Office) _____

Phone: (Home/Cell) 561-866-7826 (Office) _____

(Email) robert@blueline-usa.com (Fax) _____

Employer: Blue Line Aviation

Position: VP of Flight Operations Years/Months: 1 year

Please answer the following: **Check (✔) one:**

Are you a city of Winter Haven resident?	Yes ☐	No ☑
Are you a registered voter?	Yes ☐	No ☑
Do you own property in Winter Haven?	Yes ☐	No ☑
Are you currently serving on a City Board/Committee?	Yes ☐	No ☑
Have you ever served on a City Board/Committee?	Yes ☐	No ☑

- If yes, when and which Board(s)/Committee(s)? _____

_____

Are you a City employee? Yes ☐ No ☑

How long have you lived in Winter Haven? Years/Months: _____

Please state your reason for wanting to serve on a City Board(s)/Committee(s):

I believe that I can contribute a great deal to the committee. As an executive for a business based at Winter Haven airport, I have a vested interest in the success of the airport and its growth. My presence would mutually benefit the committee and airport by leveraging my skillset as well as my network of aviation professionals. As a servant leader, I am dedicated to helping others achieve their goals and dreams.

Describe your background and qualifications for the Board(s)/Committee(s) to which you seek appointment?

With 35+ years of aviation experience, I have a high-level knowledge on all facets of airport operations and all types of flying. I am an accomplished Airline Transport Pilot with eight type ratings, a Certified Flight Instructor, and an Airframe and Powerplant Mechanic. I am a former examiner under 141, 142, and 121. I managed a pilot training center responsible for over $30 million in revenue, and served as an airline Chief Pilot. I have been in a management position for the last 20+ years. I excel in problem solving, leadership, and project management.

Are there any potential conflicts, which would make it difficult for you to render objective judgment on questions, which come before the Board(s)/Committee(s) to which you seek appointment?:

No.

REFERENCES:

Name	Address	Phone
Christopher Wolf	lobo530@gmail.com	561-644-3584
Tom Torti	ttorti@intricateconstruction.com	914-804-2368
Les Abend	lesabend@sbcglobal.net	386-264-8318

Florida Statute 166.0442 permits the City of Winter Haven to apply a conditioned security-criminal background investigation and fingerprint requirement to all new and incumbent City appointees provided an ordinance and not mere policy is in place. Florida Statute 435.04 sets forth the means by which legally allowed level 2 background security checks and employment screenings with fingerprinting may be conducted.

1). Signature required if NOT submitting electronically: × _____ ***Date*** 10/28/2024

PLEASE EMAIL, MAIL, FAX, or DROP OFF THE COMPLETED APPLICATION

TO: Vanessa Castillo, MMC, City Clerk
The City of Winter Haven
P.O. Box 2277, Winter Haven, FL 33883-2277 ♦ 451 Third St., NW, Winter Haven, FL 33881
Office: 863.291.5627 ♦ Fax: 863.298-5293
vcastillo@mywinterhaven.com

WINTER HAVEN
The Chain of Lakes City

BOARD/COMMITTEE APPOINTMENT INFORMATION

Board(s) or Committee(s) Desired: 1) AIRPORT ADVISORY COMMITTEE (AAC)

2) _____

3) _____

Name: Barletta (Last) Mark (First) S. (Middle)

Address: (Home) 2500 21st ST NW APT 4 , Winter Haven, FL 33881

(Mailing) 2500 21st ST NW APT 4 , Winter Haven, FL 33881

(Office) _____

Phone: (Home/Cell) 781-367-7574 (Office) _____

(Email) mark@markbarletta.com (Fax) _____

Employer: Atomic Sales LLC

Position: Owner Years/Months: 5

Please answer the following: **Check (✔) one:**

Are you a city of Winter Haven resident?	Yes ●	No ☐
Are you a registered voter?	Yes ●	No ☐
Do you own property in Winter Haven?	Yes ●	No ☐
Are you currently serving on a City Board/Committee?	Yes ☐	No ●
Have you ever served on a City Board/Committee?	Yes ☐	No ●

- If yes, when and which Board(s)/Committee(s)? _____

_____

Are you a City employee? Yes ☐ No ●

How long have you lived in Winter Haven? Years/Months: 7

Please state your reason for wanting to serve on a City Board(s)/Committee(s):

It is my goal to serve on the board and further assist in making the Winter Haven Regional Airport a true aviation destination to grow as an asset to the City and the pilot community.

Describe your background and qualifications for the Board(s)/Committee(s) to which you seek appointment?

FAA Private Pilot, FAA Part 107 Remote Pilot, FAA Light Sport Repairman (LSRM), AOPA Member, EAA Chapter 229 Winter Haven Member, Over 30 Years of Small Business Ownership, Vice President of Casa Del Sol Condominium Association in Winter Haven, Board Member of the North Andover Hangar Association at KLWM Airport

Are there any potential conflicts, which would make it difficult for you to render objective judgment on questions, which come before the Board(s)/Committee(s) to which you seek appointment?:

No

REFERENCES:

Name	Address	Phone
John Ragucci	1 Atkinson Dr, Saugus, MA 01906	617-387-1539
Ricardo Santos Diaz	1030 Champions Ridge Dr, Davernport,	863-670-5068
Vern Schaejbe	6473 Towhlen Rd. North Port, FL 34291	603-275-1851
Robert Jones	850 N. Echo Drive, Lake Alfred, FL	484-651-7256

Florida Statute 166.0442 permits the City of Winter Haven to apply a conditioned security-criminal background investigation and fingerprint requirement to all new and incumbent City appointees provided an ordinance and not mere policy is in place. Florida Statute 435.04 sets forth the means by which legally allowed level 2 background security checks and employment screenings with fingerprinting may be conducted.

1). Signature required if NOT submitting electronically: × _____ ***Date*** 1/14/2025

PLEASE EMAIL, MAIL, FAX, or DROP OFF THE COMPLETED APPLICATION

TO: Vanessa Castillo, MMC, City Clerk
The City of Winter Haven
P.O. Box 2277, Winter Haven, FL 33883-2277 ♦ 451 Third St., NW, Winter Haven, FL 33881
Office: 863.291.5627 ♦ Fax: 863.298-5293
vcastillo@mywinterhaven.com

WINTER HAVEN
The Chain of Lakes City

BOARD/COMMITTEE APPOINTMENT INFORMATION

Board(s) or Committee(s) Desired: 1) Airport Advisory Committee
2) _____
3) _____

Name: Zachary (Last) Logan (First) Drum (Middle)

Address: (Home) 1845 Woodpointe Dr, Winter Haven, FL 33884
(Mailing) _____
(Office) 101 Cypress Gardens Rd, Winter Haven, FL 33880

Phone: (Home/Cell) (863) 528-6236 (Office) (863) 294-7371
(Email) ZachDrum@ChevyCtr.com (Fax) _____

Employer: Chevrolet Center, Inc.

Position: Manager Years/Months: 1 yr

Please answer the following: **Check (✔) one:**

Are you a city of Winter Haven resident?	Yes ☑	No ☐
Are you a registered voter?	Yes ☑	No ☐
Do you own property in Winter Haven?	Yes ☑	No ☐
Are you currently serving on a City Board/Committee?	Yes ☐	No ☑
Have you ever served on a City Board/Committee?	Yes ☐	No ☑

- If yes, when and which Board(s)/Committee(s)? _____

Are you a City employee? Yes ☐ No ☑

How long have you lived in Winter Haven? Years/Months: 1 Yr, 8 Mo

Please state your reason for wanting to serve on a City Board(s)/Committee(s):

After communicating with several city officials, as well as current Airport Advisory Committee members, I'm confident that as a Winter Haven native and active pilot, I can provide valuable insight and contributions to improve our city for both residents and visitors.

Describe your background and qualifications for the Board(s)/Committee(s) to which you seek appointment?

I'm a combat-proven United States Naval Aviator with over 1800 mishap-free flight hours and 400 carrier-arrested landings as a Navy strike fighter pilot, strike fighter instructor pilot, tactical demonstration pilot, functional check flight (FCF) pilot, Forward Air Controller Airborne FAC(A) and training-qualified Landing Signal Officer (LSO).

Are there any potential conflicts, which would make it difficult for you to render objective judgment on questions, which come before the Board(s)/Committee(s) to which you seek appointment?:

No

REFERENCES:

Name	Address	Phone
Ben Shipps	Owner, Jack Browns Seaplane Base	(863) 956-2243
Samuel Portlock	Owner, Chevrolet Center, Inc.	(863) 294-7371
T Michael Stavres	City Manager, Winter Haven	(863) 291-5600

Florida Statute 166.0442 permits the City of Winter Haven to apply a conditioned security-criminal background investigation and fingerprint requirement to all new and incumbent City appointees provided an ordinance and not mere policy is in place. Florida Statute 435.04 sets forth the means by which legally allowed level 2 background security checks and employment screenings with fingerprinting may be conducted.

1). Signature required if NOT submitting electronically: × _____ ***Date*** _____

2). To elect submission via email with no signature, click here: ☑ SUBMIT

PLEASE EMAIL, MAIL, FAX, or DROP OFF THE COMPLETED APPLICATION

TO: Vanessa Castillo, MMC, City Clerk
The City of Winter Haven
P.O. Box 2277, Winter Haven, FL 33883-2277 ♦ 451 Third St., NW, Winter Haven, FL 33881
Office: 863.291.5627 ♦ Fax: 863.298-5293
vcastillo@mywinterhaven.com

WINTER HAVEN
The Chain of Lakes City

BOARD/COMMITTEE APPOINTMENT INFORMATION

Board(s) or Committee(s) Desired: 1) AIRPORT ADVISORY COMMITTEE (AAC)

2)

3)

Name: Garcia (Last) Rafael (First) L (Middle)

Address: (Home) 1582 Skyline Dr, Kissimmee FL 3476

(Mailing) 1582 Skyline Dr, Kissimmee FL 3476

(Office) 1582 Skyline Dr, Kissimmee FL 3476

Phone: (Home/Cell) 407-501-1976 (Office) 407-501-1976

(Email) rgarcia@wescompaero.com (Fax)

Employer: WESCOMP AERO, LLC / Pilots Flight Academy

Position: General Manager Years/Months: 10 years

Please answer the following: **Check (✔) one:**

Are you a city of Winter Haven resident?	Yes ☐	No ●
Are you a registered voter?	Yes ●	No ☐
Do you own property in Winter Haven?	Yes ☐	No ●
Are you currently serving on a City Board/Committee?	Yes ☐	No ●
Have you ever served on a City Board/Committee?	Yes ☐	No ●

- If yes, when and which Board(s)/Committee(s)?

Are you a City employee? Yes ☐ No ●

How long have you lived in Winter Haven? Years/Months:

Please state your reason for wanting to serve on a City Board(s)/Committee(s):

I have been involved with Winter Haven Airport since 2018, and I was part owner of Plane Instruments Avionics services. I am trying to get space at the airport to establish my aviation business in KGIF once again. At this moment, I have three airplanes based there.

Describe your background and qualifications for the Board(s)/Committee(s) to which you seek appointment?

I have 45 years of experience in the aviation field, spanning from certified Pilot to aviation business services owner to FAA repairman certification. From aircraft mechanics to avionics, I have vast experience that can be of benefit to the airport community and the City of Winter Haven.

Are there any potential conflicts, which would make it difficult for you to render objective judgment on questions, which come before the Board(s)/Committee(s) to which you seek appointment?:

There are no conflicts. I am a very focused person who doesn't permit biases or external interests to interfere with what I do and the service I can offer to the community.

REFERENCES:

Name	Address	Phone
Eddie McGuire	Winter Haven	863-287-4874
Robert Gonzalez	FAA	352-348-3273
Bernie Morris	Winter Haven / KGIF	
Jerry Stevens	Winter Haven / Holly Smoke	

Florida Statute 166.0442 permits the City of Winter Haven to apply a conditioned security-criminal background investigation and fingerprint requirement to all new and incumbent City appointees provided an ordinance and not mere policy is in place. Florida Statute 435.04 sets forth the means by which legally allowed level 2 background security checks and employment screenings with fingerprinting may be conducted.

1). Signature required if NOT submitting electronically: × _____ ***Date*** 10/31/2024

PLEASE EMAIL, MAIL, FAX, or DROP OFF THE COMPLETED APPLICATION
TO: Vanessa Castillo, MMC, City Clerk
The City of Winter Haven
P.O. Box 2277, Winter Haven, FL 33883-2277 ♦ 451 Third St., NW, Winter Haven, FL 33881
Office: 863.291.5627 ♦ Fax: 863.298-5293
vcastillo@mywinterhaven.com

WINTER HAVEN
The Chain of Lakes City

BOARD/COMMITTEE APPOINTMENT INFORMATION

Board(s) or Committee(s) Desired: 1) Winter Haven Airport Advisory Committee

2) _____

3) _____

Name: Kochan (Last) Janeen (First) Adrion (Middle)

Address: (Home) 17 Aviation Drive

(Mailing) _____

(Office) _____

Phone: (Home/Cell) 863-207-0484 (Office) _____

(Email) _____ (Fax) _____

Employer: Aviation Research, Training, and Services, Inc.

Position: President Years/Months: 40 Years/1 Mo

Please answer the following: **Check (✔) one:**

Are you a city of Winter Haven resident?	Yes ●	No ☐
Are you a registered voter?	Yes ●	No ☐
Do you own property in Winter Haven?	Yes ●	No ☐
Are you currently serving on a City Board/Committee?	Yes ☐	No ●
Have you ever served on a City Board/Committee?	Yes ☐	No ●

- If yes, when and which Board(s)/Committee(s)? _____

Are you a City employee? Yes ☐ No ●

How long have you lived in Winter Haven? Years/Months: 38 Years

Please state your reason for wanting to serve on a City Board(s)/Committee(s):

I am an aviation professional serving the aviation community as an FAA Designated Pilot Examiner and Human Factors Engineering for over 40 years. I am a tenant at the Winter Haven Regional Airport with my office in the terminal building. My contributions to the committee would focus on aviation safety, efficiency, and the development of a Safety Management System.

Describe your background and qualifications for the Board(s)/Committee(s) to which you seek appointment?

Janeen A. Kochan holds a PhD in Applied Experimental and Human Factors Psychology from the University of Central Florida in Orlando and an M.S. in Industrial and Systems Engineering from the Ohio State University. Primary translational research interests include expertise, human performance, decision-making, stress, fatigue, automation, workload, resource management, unexpected events, and training. She is a former Boeing 767 captain and human factors instructor for a major United States airline and holds current and active Airframe and Powerplant (mechanic), Inspector Authorization, Flight Instructor, and FAA Designated Pilot Examiner privileges. Dr. Kochan is an Adjunct Professor for Embry-Riddle Aeronautical University – Worldwide.

Are there any potential conflicts, which would make it difficult for you to render objective judgment on questions, which come before the Board(s)/Committee(s) to which you seek appointment?:

None

REFERENCES:

Name	Address	Phone
Jon Brown	2404 US-92, Winter Haven, Fl 33881	(863) 956-2243
Michaela Satter	3200 Fruit Hill Rd #96, Ninety Six, SC	(707) 599-9650
Mark Griffin	1312 Cresent Lake Drive, Windemere,	(407) 256-2457
Troy Heidel	2073 US-92, Winter Haven, FL 33881	(863) 298-4551

Florida Statute 166.0442 permits the City of Winter Haven to apply a conditioned security-criminal background investigation and fingerprint requirement to all new and incumbent City appointees provided an ordinance and not mere policy is in place. Florida Statute 435.04 sets forth the means by which legally allowed level 2 background security checks and employment screenings with fingerprinting may be conducted.

1). Signature required if NOT submitting electronically: × _____ ***Date*** 10/18/2024

PLEASE EMAIL, MAIL, FAX, or DROP OFF THE COMPLETED APPLICATION
TO: Vanessa Castillo, MMC, City Clerk
The City of Winter Haven
P.O. Box 2277, Winter Haven, FL 33883-2277 ♦ 451 Third St., NW, Winter Haven, FL 33881
Office: 863.291.5627 ♦ Fax: 863.298-5293
vcastillo@mywinterhaven.com

WINTER HAVEN
The Chain of Lakes City

BOARD/COMMITTEE APPOINTMENT INFORMATION

Board(s) or Committee(s) Desired: 1) Airport Advisory Committee

2) _____

3) _____

Name: McCaughey (Last) Steven (First) Anthony (Middle)

Address: (Home) 4206 Lake Marianna Drive, Winter Haven, FL 33881

(Mailing) 4206 Lake Marianna Drive, Winter Haven, FL 33881

(Office) 2073 US Highway 92, Winter Haven, FL 33881

Phone: (Home/Cell) 707-845-9387 (Office) 863-701-7979

(Email) stevenmccaughey@gmail.com (Fax) N/A

Employer: Seaplane Pilots Association

Position: Executive Director Years/Months: 13/6

Please answer the following: **Check (✔) one:**

Are you a city of Winter Haven resident?	Yes ●	No ☐
Are you a registered voter?	Yes ●	No ☐
Do you own property in Winter Haven?	Yes ●	No ☐
Are you currently serving on a City Board/Committee?	Yes ☐	No ●
Have you ever served on a City Board/Committee?	Yes ☐	No ●

- If yes, when and which Board(s)/Committee(s)? _____

Are you a City employee? Yes ☐ No ●

How long have you lived in Winter Haven? Years/Months: 13/6

Please state your reason for wanting to serve on a City Board(s)/Committee(s):

I believe I can provide valuable feedback and guidance for the city's best interests, the economic development of the airport and the owner operators, transient aircraft & students that are ultimately the customers of the airport. I advocate on behalf of the seaplane community on a local, state and national basis through my professional position working with both aviation professionals and advocacy organizations around the country which provides me with an unusual level of knowledge on the state of aviation issues from a national perspective. I currently rent two hangars and an office on the airport. Ultimately, I desire to expand the value and leadership I provide to the airport and the community.

Describe your background and qualifications for the Board(s)/Committee(s) to which you seek appointment?

I have run two international aviation non-profits since May of 2011, the Seaplane Pilots Association and the Seaplane Foundation. Additionally, I have worked at multiple flight schools and fixed based operators, and have been an airport (multiple airports) tenant for 34 years. I have owned and operated multiple land and seaplanes. As an aviation consultant and business owner, I have assisted in movie & tv production and editorial production on countless projects. I am a FAA training partner and develop and provide aviation safety workshops, seminars and videos nationwide. Additional, skills sets include event planning, systems development, team management and marketing. Projects have included studies sponsored by the Transportation Research Board and the National Academy of Sciences.

Are there any potential conflicts, which would make it difficult for you to render objective judgment on questions, which come before the Board(s)/Committee(s) to which you seek appointment?:

I do not believe so, I am used to working on committees where I have to provide objective, non-biased expertise to solve problems such as integrating seaplanes and aircraft activities into other non-aviation user groups and the non-flying general public. I work across the table in an attempt to create mutually serving bridges between opposing and potentially conflicting interests as a profession.

REFERENCES:

Name	Address	Phone
Jon Brown	2704 US Highway 92, Winter Haven, FL	863-651-1160
Steve Williams	320 Robin Hood Road, Georgetown, ME	207-350-2120
Ed McNeil	100 Beach Drive NE #100, St	863-219-8041
Harry Shannon	418B Bartow Municiple Airport, Bartow,	863-206-4206

Florida Statute 166.0442 permits the City of Winter Haven to apply a conditioned security-criminal background investigation and fingerprint requirement to all new and incumbent City appointees provided an ordinance and not mere policy is in place. Florida Statute 435.04 sets forth the means by which legally allowed level 2 background security checks and employment screenings with fingerprinting may be conducted.

1). Signature required if NOT submitting electronically: × _____ ***Date*** 10/29/2024

PLEASE EMAIL, MAIL, FAX, or DROP OFF THE COMPLETED APPLICATION
TO: Vanessa Castillo, MMC, City Clerk
The City of Winter Haven
P.O. Box 2277, Winter Haven, FL 33883-2277 ♦ 451 Third St., NW, Winter Haven, FL 33881
Office: 863.291.5627 ♦ Fax: 863.298-5293
vcastillo@mywinterhaven.com

WINTER HAVEN
The Chain of Lakes City

BOARD/COMMITTEE APPOINTMENT INFORMATION

Board(s) or Committee(s) Desired: 1) Airport Advisory Commitee (AAC)
2) _____
3) _____

Name: Morris (Last) Bernard (First) John (Middle)

Address: (Home) 448 Lake Charles Drive, Davenport, FL 33837-3612
(Mailing) Same as above
(Office) _____

Phone: (Home/Cell) 716-397-8280 (Office) _____
(Email) bernie_morris@hotmail.com (Fax) _____

Employer: Retired Human Resource Manager

Position: _____ Years/Months: _____

Please answer the following: **Check (✔) one:**

Are you a city of Winter Haven resident?	Yes ☐	No ●
Are you a registered voter?	Yes ●	No ☐
Do you own property in Winter Haven?	Yes ☐	No ●
Are you currently serving on a City Board/Committee?	Yes ☐	No ●
Have you ever served on a City Board/Committee?	Yes ☐	No ●

- If yes, when and which Board(s)/Committee(s)? _____

Are you a City employee? Yes ☐ No ●

How long have you lived in Winter Haven? Years/Months: _____

Please state your reason for wanting to serve on a City Board(s)/Committee(s):

As a hangar tenant at Winter Haven Airport I want to use my background in general aviation and business to aid in the continued efficient operation of the airport and plan for its continuing growth as a regional general aviation hub.

Describe your background and qualifications for the Board(s)/Committee(s) to which you seek appointment?

Bernard J. Morris
448 Lake Charles Drive
Davenport, Florida 33837
716-397-8280 Cell
863-422-5138 Home
bernie_morris@hotmail.com

Aviation Experience
Commercial Pilot, MEL, SEL, CFI, 2200+ Flight Hours, 2020 FAA Master Pilot Award Holder
Aircraft Owner since 1986. GIF Hangar tenant 280-1 starting October 2012
Former President, Cattaraugus/Olean Airport KOLE Support Group providing tenant

Are there any potential conflicts, which would make it difficult for you to render objective judgment on questions, which come before the Board(s)/Committee(s) to which you seek appointment?:

None

REFERENCES:

Name	Address	Phone
Charlie Hoover	Dundee, FL	863-206-7930
Tristan Raab	Winter Haven, FL	518-428-0804
Jamie Becket	Winter Haven, FL	863-224-2133

Florida Statute 166.0442 permits the City of Winter Haven to apply a conditioned security-criminal background investigation and fingerprint requirement to all new and incumbent City appointees provided an ordinance and not mere policy is in place. Florida Statute 435.04 sets forth the means by which legally allowed level 2 background security checks and employment screenings with fingerprinting may be conducted.

1). Signature required if NOT submitting electronically: × _____ ***Date*** 10/21/2024

PLEASE EMAIL, MAIL, FAX, or DROP OFF THE COMPLETED APPLICATION
TO: Vanessa Castillo, MMC, City Clerk
The City of Winter Haven
P.O. Box 2277, Winter Haven, FL 33883-2277 ♦ 451 Third St., NW, Winter Haven, FL 33881
Office: 863.291.5627 ♦ Fax: 863.298-5293
vcastillo@mywinterhaven.com

DATE: February 28, 2025

TO: Honorable Mayor and City Commissioners

VIA: T. Michael Stavres, City Manager
M.J. Carnevale, Deputy City Manager
Charlie Bird, Assistant City Manager – Public Safety
Vance Monroe, Police Chief

FROM: Donald Nunnery, Police Captain

SUBJECT: Agreement to provide Traffic Control and Enforcement of private roads owned and under the control of Lucerne Park Community Development District.

BACKGROUND

The Lucerne Park Community Development District (CDD), by a majority vote of its Board of Directors, desires for the City of Winter Haven to exercise jurisdiction for traffic control and enforcement over the private roads within the CDD. These roads are owned and controlled by the CDD. Section 316.006(2)(b)(4) of the Florida Statutes authorizes the City to exercise traffic control and enforcement jurisdiction over any private road owned and controlled by a homeowners' association, as defined in Chapter 720 of the Florida Statutes. This authority is granted upon a majority vote of the CDD's Board of Directors, provided the City Commission approves a written agreement between the parties. These types of agreements between homeowners' associations and municipal or county governments are intended to enhance traffic safety within communities.

Lucerne Park Community Development District will be responsible, at its own expense, for complying with all applicable requirements for signage and traffic control as mandated by Florida law. CDD will also reimburse the City for the actual cost of any speed study and/or inspections conducted to determine whether existing signage meets or exceeds the standards set forth in the Manual on Uniform Traffic Control Devices (MUTCD) of the Florida Department of Transportation. Additionally, CDD will be responsible for installing and maintaining all required signage.

Both CDD and the City acknowledge that traffic control and enforcement under the terms and conditions of this agreement will be consistent with the level of service provided by the Winter Haven Police Department in similar geographic areas within the City.

This agreement has been reviewed and approved as to form by the City Attorney.

FINANCIAL IMPACT

There will not be any fiscal impact to the City of Winter Haven.

STRATEGIC PLAN ALIGNMENT

- Pillar: Community Safety
- Goal: 5.3 - Strengthen how safe every citizen, business, and visitor feels within Winter Haven.
- Strategy: 5.3.6 – Conduct quarterly cross-departmental review of traffic accidents and develop pro-active preventative strategies.

RECOMMENDATION

Staff recommends the City Commission approve the Agreement and authorize the City Manager or his designee to take any additional action necessary thereto.

ATTACHMENTS

- Agreement for Traffic Control and Enforcement on Private Roads.
- Map of Lucerne Park Reserve traffic area

AGREEMENT BETWEEN THE CITY OF WINTER HAVEN AND THE LUCERNE PARK COMMUNITY DEVELOPMENT DISTRICT FOR CITY EXERCISE OF TRAFFIC CONTROL JURISDICTION

THIS AGREEMENT ("**Agreement**") is made and entered into by and between **the CITY OF WINTER HAVEN**, a Florida municipal corporation acting by and through its City Commissioners (hereinafter referred to as "**CITY**"), and **LUCERNE PARK COMMUNITY DEVELOPMENT DISTRICT**, a local unit of special purpose government established pursuant to City Commission of the City of Winter Haven Ordinance No. O-18-50, acting by and through its Board of Supervisors (hereinafter referred to as the "**CDD**").

WITNESSETH

WHEREAS, the CDD is a local unit of special-purpose government, and an independent special district of the State of Florida, created under and pursuant to Chapter 190, Florida Statutes; and

WHEREAS, the CDD is the owner of certain roads lying entirely within the CDD boundaries (the "**Roads**"); and

WHEREAS, the CDD desires for the CITY to exercise jurisdiction for traffic control over the Roads within the CDD; and

WHEREAS, Section 316.006(2)(b), *Florida Statutes*, provides that the CITY may exercise jurisdiction over roads owned or controlled by the CDD (as a special district of the State of Florida) located in the incorporated area within the CITY boundaries if the CITY and the CDD provide, by an approved written agreement, that the CITY has traffic control jurisdiction over the roads encompassed by such agreement; and

WHEREAS, the CDD is located within the incorporated area of the City of Winter Haven, and the Roads within the communities of the CDD are owned or controlled by the CDD; and

WHEREAS, the CDD has experienced numerous traffic control problems such as motorists' failure to obey traffic regulations; and

WHEREAS, the CITY has consulted with the Chief of the Winter Haven Police Department regarding traffic control and enforcement within the CDD pursuant to the terms of this Agreement.

NOW, THEREFORE, in consideration of the premises set forth herein above the terms of which are incorporated herein the mutual promises hereinafter set forth the sufficiency and adequacy of which are hereby acknowledged the parties hereto intending to be legally bound hereby agree as follows:

1. **Recitals**. The above recitals are true and correct, and are incorporated herein by reference and form a material part of this Agreement.

2. **Traffic Control.** The CITY will exercise traffic control jurisdiction which regulates, warns, or guides traffic over the Roads within the CDD known as Lucerne Park that are located within the municipal limits of the CITY.

3. **Enforcement.** The CITY and the CDD understand and acknowledge that traffic control and enforcement shall be accomplished by the Chief of the Winter Haven Police Department (hereinafter referred to as "**Chief**") under terms and conditions consistent with the level of service provided by the Chief in similar geographic areas of the City of Winter Haven, Florida.

4. **Jurisdictional Authority**. The exercise of jurisdiction provided for herein shall be in addition to jurisdictional authority presently exercised by the CITY, if any, under the law and nothing in this Agreement shall be construed to limit or remove any such jurisdictional authority, if any. Similarly, nothing herein shall be construed to obligate the CITY in any way beyond said traffic control and enforcement.

5. **Supervision.** The planning, scheduling, organization, direction, and supervision of law enforcement officers in all matters incidental to the delivery of traffic control or enforcement shall be solely determined by and at the discretion of the Chief.

6. **Disbursement of Fines and Reimbursement of Costs.** All fines collected from traffic citations issued by the Chief or his officers for violation of traffic laws on the Roads that are located within the City's municipal limits shall be transferred to the City and/or appropriate governmental entity and disbursed as any other traffic fines collected absent this Agreement consistent with applicable rules, regulations, ordinances, and laws. In the event the CDD requests, and as a result the Chief in fact provides traffic control and enforcement services over the Roads within the CDD at a level greater than those services provided in similar geographic areas of the City of Winter Haven, Florida, the CDD shall reimburse the CITY if deemed necessary by either the CITY or the Chief or both for actual costs attributed to only those additional traffic control and enforcement services provided hereunder.

7. **Signage.** The CDD agrees, at its own expense, to comply with all applicable requirements for signage and traffic control and enforcement as required by Florida law, CITY ordinances, and Florida Department of Transportation standards. Specifically, the CDD agrees to comply with Section 316.0745, *Florida Statutes*, Uniform Signals and Devices and the Manual on Uniform Traffic Control Devices. The CDD agrees to comply with said requirements for all future installations and to maintain all current installations in accordance with said requirements. The CDD agrees to comply with any warrant studies performed by CITY. The CDD agrees, within thirty (30) days of the date of notice from CITY, to remove any multi-way stops or other installations that a study finds not to be warranted. The CDD agrees not to install any new multi-way stop or other installation without prior approval of CITY. The CITY agrees to conduct, if necessary, speed studies on the Roads that are located within the CITY municipal limits to determine the appropriate speed limit to be posted. The CDD shall reimburse the CITY for the actual cost of the speed study and/or the inspection to determine if existing signage meets or exceeds the standards set forth in the Manual of Uniform Traffic Control Devices ("**MUTCD**"). The CDD shall be responsible for installing and maintaining all posted signage.

8. Term. This Agreement will be for an initial term of one (1) year and shall be automatically renewed on an annual basis unless otherwise terminated as provided herein.

9. Termination. This Agreement may be terminated by either party without cause or liability upon thirty (30) days written notice to the other party. It is explicitly noted that should the Chief request that the CITY terminate this Agreement, the CITY will honor that request pursuant to this paragraph.

10. Non-Agent Status. This Agreement shall not be construed to constitute that the CITY and/or the CHIEF, or any of their respective agents, employees, law enforcement officers, or representatives, are agents or employees of the CDD, or vice versa.

11. Severability. It is declared to be the intent of the parties hereto that if any section, subsection, sentence, clause, or provision of this Agreement is held invalid the remainder of this Agreement shall be construed as not having contained said section, subsection, sentence, clause, or provision and shall not be affected by such holding.

12. Entire Agreement. This Agreement, including all exhibits attached hereto, contains the sole understanding between the parties relating to the matters set forth herein and no modification hereof may be made except by an instrument in writing and executed in the same manner as this Agreement.

13. Assignment. This Agreement shall not be assigned, or other responsibilities herein transferred, delegated, or conveyed in any manner, without the express written consent of CITY. The CITY will not provide such written consent prior to consulting with the Chief.

14. Successors. This Agreement shall be binding upon the parties their heirs, assigns, and successors in interest.

15. Notice. All notices to be given hereunder shall be in writing and sent by certified mail return receipt requested or by recognized overnight courier (such as Federal Express) to the following addresses:

As to City:	City of Winter Haven Attn: T. Michael Starves, City Manager 451Third Street NW Winter Haven, Florida 33881
Copy to:	Frederick J. Murphy, Jr., Esquire City Attorney Boswell & Dunlap LLP 345 South Central Avenue Bartow, Florida 33830
As to Chief:	Winter Haven Police Department Attn: Vance Monroe

125 North Lake Silver Drive NW
Winter Haven, Florida 33881

As to District: Lucerne Park Community Development District
c/o Governmental Management Services – Central Florida, LLC
219 E. Livingston Street
Orlando, Florida 32801
Attn: District Manager

Copy to: Kilinski Van Wyk PLLC
517 East College Avenue
Tallahassee, Florida 32301
Attn: Lucerne Park CDD, District Counsel

16. Indemnification. In consideration for making and entering into this Agreement and for other good and valuable consideration the receipt and sufficiency of which is hereby acknowledged and to the fullest extent permitted by law, but as limited by applicable Florida law and the CDD's sovereign immunity, the CDD shall indemnify defend and hold harmless the CITY and/or the CHIEF and all of their respective agents, employees, law enforcement officers, or representatives, from any claim loss damage cost charge or expense including attorneys' fees and costs, arising out of any act, action, neglect, or omission, during the performance of this Agreement or work performed thereunder, whether direct or indirect, and whether or not due to or caused by negligence of the CITY and/or the CHIEF and/or all of their respective agents, employees, law enforcement officers, or representatives, except that CDD will not be liable under this provision for damages arising out of the injury or damage to persons or property directly caused or resulting from the sole negligence, any intentional action or any omission of the CITY and/or CHIEF and/or all of their respective agents, employees, law enforcement officers, or representatives. The CDD's obligation to defend and indemnify shall not be excused because of the CDD's inability to evaluate liability, or because the CDD evaluates liability and determines that the CDD is not liable, or determines that the CITY and/or the CHIEF is solely negligent. Only a final adjudication or judgment finding the CITY or the CHIEF solely negligent shall excuse performance of this provision by the CDD. If a judgment finding the CITY or the CHIEF solely negligent is appealed, and the finding of sole negligence is reversed, the CDD will, to the extent permitted by law, be obligated to indemnify the CITY and the CHIEF for the cost of the appeal(s). The CDD shall pay all costs, including but not limited to attorneys' fees related to this obligation and its enforcement by the CITY or the CHIEF. This provision shall also pertain to any claims brought against the CITY or the CHIEF by any employee of the CDD, subcontractor, or anyone directly or indirectly employed by any of them. The CDD's obligation under this provision shall not be limited in any way to the agreed upon contract price if any as shown in this Agreement or the CDD's limit of or lack of sufficient insurance protection.

Nothing herein is intended to act as a waiver of the CITY's sovereign immunity and/or the limits of liability set forth in Section 768.28, *Florida Statutes*, regardless of whether any such obligations are based in tort, contract, statute, strict liability, and negligence, product liability or otherwise.

Furthermore, nothing herein shall cause or be construed as a waiver of the CDD's sovereign immunity or limitations on liability granted pursuant to Section 768.28, *Florida Statutes,* or other law, and nothing in this Agreement shall inure to the benefit of any third party for the purpose of allowing any claim which could otherwise be barred under the Doctrine cf Sovereign Immunity or by operation of law.

17. Governing Law and Venue. This Agreement shall be governed by and construed in accordance with the laws of the State of Florida. Venue for any actions arising out of this Agreement shall be exclusively in the State Court with competent jurisdiction in and for Polk County, Florida.

18. Effective Date. The effective date of this Agreement shall be the date on which the CITY's governing body approves this Agreement.

19. Counterpart Signature Pages. To facilitate execution of this Agreement, the parties hereto hereby agree that this Agreement may be executed in as many counterparts as may be required and it shall not be necessary that the signature of, or on behalf of, each party appear on each counterpart; it shall be sufficient that the signature of, or on behalf of, each party appear on one or more of such counterparts. All counterparts shall, when taken collectively, constitute a single agreement.

IN **WITNESS WHEREOF,** the parties have caused these premises to be executed by their duly authorized representatives on this _____ day of _____.2025.

ATTEST:

(SEAL)

_____
Vanessa Castillo, City Clerk

CITY OF WINTER HAVEN, a Florida municipal corporation

By: _____
Nathaniel J. Birdson, Jr., Mayor

APPROVED AS TO LEGAL FORM AND SUFFICIENCY
BY THE CITY ATTORNEY

_____
Frederick John Murphy, Jr.

[Signature page to Agreement between the City Of Winter Haven and the Lucerne Park Community Development District for City Exercise of Traffic Control Jurisdiction]

LUCERNE PARK COMMUNITY DEVELOPMENT DISTRICT, a Florida community development district

By: _____
Bobbie Henley
Chairperson, Board of Supervisors

STATE OF FLORIDA
COUNTY OF Polk

SWORN TO AND SUBSCRIBED before me ☑ physical presence or ☐ remote notarization by Bobbie Henley, as Chairperson of the Board of Supervisors of the Lucerne Park Community Development District, who is personally known to me or who produced _____ as identification this 19 day of September, 2024.

_____
Notary Public

(Notary Seal)

PATRICIA L. ADAMS
Notary Public
State of Florida
Comm# HH511648
Expires 7/30/2028

Lucerne Park Reserve Aerial Map

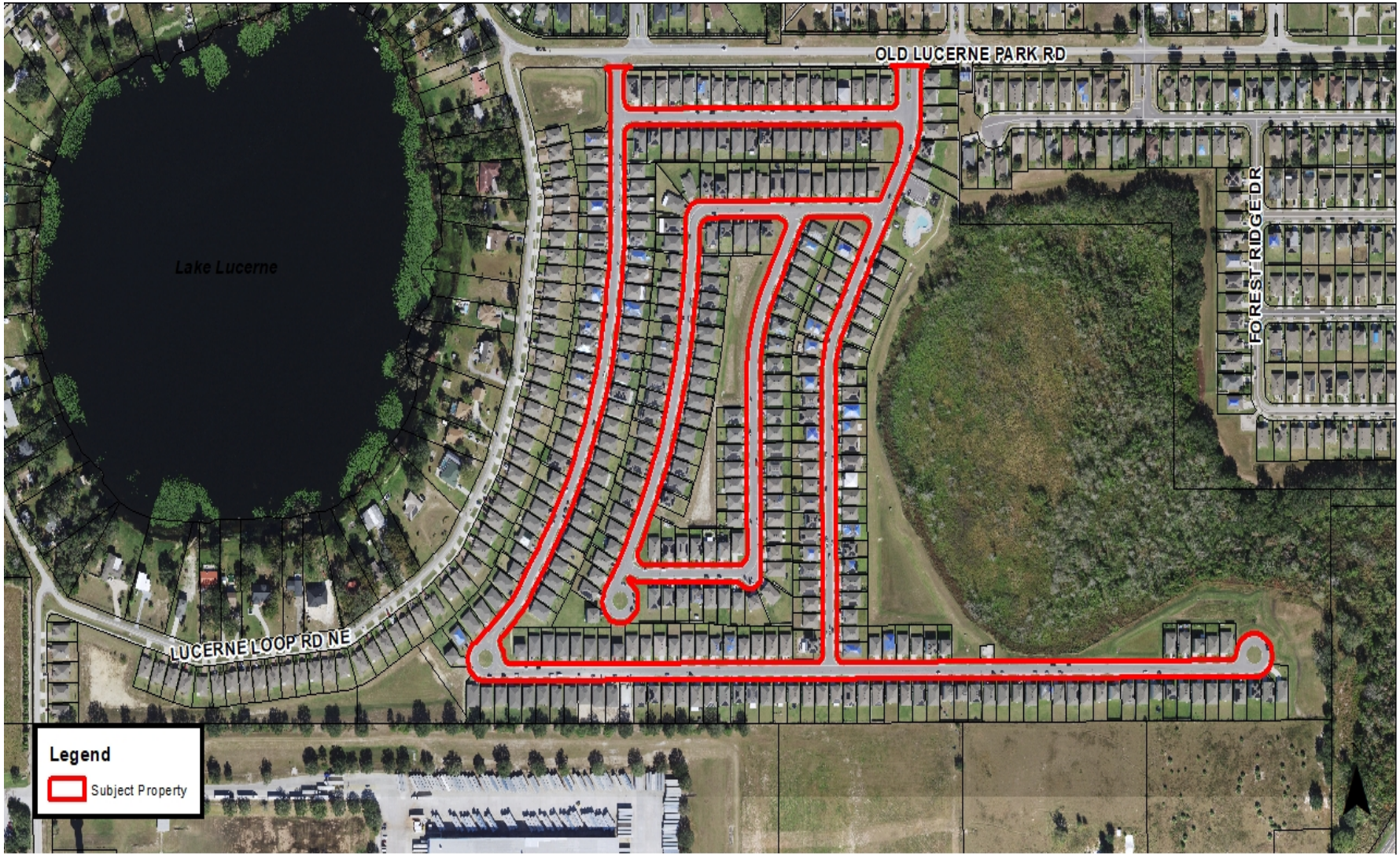

DATE: February 24, 2025

TO: Honorable Mayor and City Commissioners

VIA: T. Michael Stavres, City Manager
M.J. Carnevale, Deputy City Manager

FROM: Gary M. Hubbard, Water Department Director

SUBJECT: Florida Department of Environmental Protection LPA 0212 Grant Amendment #2 Between Polk Regional Water Cooperative and the City of Winter Haven

---

BACKGROUND

In 2017, the Florida Legislature passed HB 573 which is also referred to as the Heartland Headwaters Protection and Sustainability Act. This Act recognizes the importance of water resources around Polk County as well as partnerships between the regional water supply authority, the Polk Regional Water Cooperative (PRWC), and local governments. This Act requires that PRWC submits an annual comprehensive report listing the projects that are needed to protect and restore the region's water resources. This report then may be considered for state funding support through the Florida Department of Environmental Protection (FDEP).

In July 2022, PRWC entered into grant agreement number LPA0212 with the FDEP for Heartland funds, which provides pass-through funding to four PRWC member governments, including Winter Haven. In September 2022, Winter Haven and PRWC entered into an agreement incorporating LPA0212 to utilize the FDEP grant funds for Winter Haven's Septic to Sewer Program and ASR Wellfield Project. LPA0212 between FDEP and PRWC was subsequently amended in March 2023 and September 2023 to modify the budget and scope of work. The Agreement between Winter Haven and PRWC was amended in August 2024 to acknowledge these two amendments to LPA0212.

In November 2024, LPA0212 between FDEP and PRWC was further amended to modify the expiration date, budget, and scope of work. The proposed second amendment to the Agreement between Winter Haven and PRWC is necessary to make it consistent with, incorporate the latest amendment to LPA0212, and proceed with grant implementation.

The amendment does the following:

- Adds $1,310,187 for a new LPA0212 grant total of $22,562,675. Of this, $1,235,187 will be allocated to the Southeast Wellfield project for land acquisition, and $75,000 will be allocated to the Conservation Implementation Program to fund 50% of the newly established Conservation budget.
- Extends the LPA0212 grant agreement deadline to 12/31/2026.
- Re-distributes existing funds amongst tasks and revises the scope-of-work to better reflect project expenses and progress to date.

FINANCIAL IMPACT

There are no financial impacts associated with this amendment for the City of Winter Haven.

STRATEGIC PLAN ALIGNMENT

- Pillar: Responsible Government
- Goal 6.1 – Exemplify fiscal accountability and resiliency.
- Strategy 6.1.5 – Research and pursue alternative/nontraditional revenue sources and partnership opportunities to enhance financial sustainability and resiliency.

RECOMMENDATION

Staff recommends the City Commission approve the LPA 0212 Grant Amendment between Polk Regional Water Cooperative and the City of Winter Haven and authorize the City Manager, or his designee, take any and all actions necessary thereto.

ATTACHMENTS

- PRWC Heartland Winter Haven Agreement LPA0212, Amendment #2
- Exhibit A FDEP LPA0212 – Final Agreement
- PRWC Heartland Winter Haven Agreement LPA0212, Amendment #1
- Exhibit B PRWC Heartland Winter Haven Agreement LPA0212
- Exhibit C-1 FDEP LPA0212 – A1 Executed 3-24-23
- Exhibit C-2 FDEP LPA0212 Amendment 2 Executed 9-29-23
- Exhibit C-3 FDEP LPA0212 A3 Executed 11-21-24

SECOND AMENDMENT TO AGREEMENT BETWEEN
POLK REGIONAL WATER COOPERATIVE
AND
CITY OF WINTER HAVEN
POLK REGIONAL WATER COOPERATIVE
HEARTLAND PROTECTION AND SUSTAINABILITY PROJECT

This SECOND AMENDMENT TO AGREEMENT (Second Amendment) effective upon execution by both parties, by and between the POLK REGIONAL WATER COOPERATIVE, a public entity established by Interlocal Agreement, having an address of 330 West Church Street, Bartow, Florida 33831, hereinafter referred to as the "PRWC", and the City of Winter Haven, a municipal corporation organized and existing under the laws of the State of Florida, having an address of 451 Third Street, N.W., Winter Haven, Florida 33881, hereinafter referred to as the “Member.” The PRWC and the Member are also referred to herein individually as a “Party” and collectively as the “Parties.”

WITNESSETH:

WHEREAS, in 2017, the Florida Legislature passed HB 573, better known as the Heartland Headwaters Protection and Sustainability Act (Chapter No. 2017-111, Laws of Florida) (the Act), which statutorily recognizes the vital importance of those portions of the Green Swamp Area of Critical State Concern that lie within the jurisdictional bounds of Polk and Lake counties and designates Polk County’s aquifers as the headwaters for six of Florida’s major rivers: the Alafia, Hillsborough, Kissimmee, Ocklawaha, Peace, and Withlacoochee Rivers. Furthermore, it acknowledges the critical importance of Polk County’s aquifers to the economic and ecological health of the surrounding regions. The Act declared that fostering partnerships between Regional Water Supply Authorities (RWSA) and local governments is in the state’s interest;

WHEREAS, for the purposes of fostering such partnerships, the Act requires that the PRWC prepare annual comprehensive reports listing projects that are needed to protect and restore the region’s water resources, so that they may be considered for state funding. These funds are awarded to PRWC by the Florida Department of Environmental Protection (FDEP);

WHEREAS, on July 28, 2022, FDEP and PRWC entered into grant agreement number LPA0212 (Grant Agreement), a copy of which attached hereto as **Exhibit A,** for PRWC to receive funding as Grantee for the Polk Regional Water Cooperative Heartland Headwaters Protection and Sustainability Project;

WHEREAS, the Grant Agreement identified the Winter Haven Septic to Sewer Program and the ASR Wellfield Construction Project as two components of the Polk

Regional Water Cooperative Heartland Headwaters Protection and Sustainability Project (Project(s));

WHEREAS, the Member is a member government of PRWC, and the Grant Agreement provides that PRWC and Member shall work in conjunction with PRWC in implementing the Projects; and

WHEREAS, on September 21, 2022, Member and PRWC entered into an agreement tilted Agreement Between Polk Regional Water Cooperative and Winter Haven Polk Regional Water Cooperative Heartland Protection and Sustainability Project (Member Agreement), a copy of which attached hereto as **Exhibit B**, to provide for utilization of funds allocated in the Grant Agreement for the Projects by the Member, and for the Member to be bound by the requirements of the Grant Agreement as those requirements pertain to Member's activities with regard to the Projects; and

WHEREAS, on March 24, 2023, FDEP and PRWC entered into Amendment No. 1 to the Grant Agreement (Amendment No. 1), a copy of which is attached hereto as **Exhibit C-1**, which made revisions to Grant Agreement, including modifying the budget and scope of work for the Polk Regional Water Cooperative Heartland Headwaters Protection and Sustainability Project as a result of additional funds being appropriated by the Florida Legislature under the 2022-2023 General Appropriations Act; and

WHEREAS, on September 29, 2023, FDEP and PRWC entered into Amendment No. 2 to the Grant Agreement (Amendment No. 2), a copy of which is attached hereto as **Exhibit C-2**, which made further revisions to the Grant Agreement, including modifying the budget and scope of work for the Polk Regional Water Cooperative Heartland Headwaters Protection and Sustainability Project as a result of additional funds being appropriated by the Florida Legislature under the 2023-2024 General Appropriations Act; and

WHEREAS, on August 12, 2024, Member and PRWC entered into an Amendment to the Agreement Between Polk Regional Water Cooperative and City of Winter Haven Polk Regional Water Cooperative Heartland Protection and Sustainability Project (First Amended Member Agreement), amending the Member Agreement to incorporate Amendment No. 1 and Amendment No. 2 to the Grant Agreement; and

WHEREAS, on November 21, 2024, FDEP and PRWC entered into Amendment No. 3 to the Grant Agreement (Amendment No. 3), a copy of which is attached hereto as **Exhibit C-3**, which made further revisions to Grant Agreement, including modifications to the date of expiration, scope of work, and budget; and

WHEREAS, Section 4 of the Member Agreement provides that in the event the Grant Agreement is amended, the Parties shall coordinate in good faith to amend the Member Agreement to be consistent with the Grant Agreement; and

WHEREAS, Member and PRWC desire to amend the First Amended Member Agreement be consistent with and to account for the modifications reflected in Amendment No. 3 to the Grant Agreement;

NOW THEREFORE, in consideration of the mutual terms, covenants and conditions contained herein, the Parties hereby mutually agree as follows:

1. **RECITALS**. The foregoing recitals are true and correct and form a material part of this Agreement.

2. **PURPOSE**. This Second Amendment modifies the Member Agreement, as amended by the First Amended Member Agreement, to incorporate and implement the changes reflected in Amendment No. 3 to the Grant Agreement, but otherwise does not alter the existing terms of the Member Agreement.

3. **AMENDMENT TO THE MEMBER AGREEMENT**. The Parties agree that the Member Agreement, as amended by the First Amended Member Agreement, is further amended such that the term "Grant Agreement" utilized in the Member Agreement shall be defined as the original Grant Agreement, as amended by Amendment No. 1, Amendment No. 2., and Amendment No. 3, and incorporate **Exhibit C-1, Exhibit C-2, and Exhibit C-3** as exhibits to the Member Agreement. The terms of Member Agreement shall otherwise remain unchanged and in full effect.

IN WITNESS WHEREOF, the undersigned have caused this Amendment to be duly executed and entered into by the Parties.

CITY OF WINTER HAVEN, FLORIDA

By: _____

_____, Mayor

Date: _____

ATTEST:

By:_____

_____, City Clerk

APPROVED AS TO FORM AND CORRECTNESS:

_____
_____ City Attorney

POLK REGIONAL WATER COOPERATIVE

By:_____
_____, Chairman

Date: _____

ATTEST:

By:_____
, Secretary

APPROVED AS TO FORM AND CORRECTNESS:

_____
Edward P. de la Parte, Legal Counsel

STATE OF FLORIDA
DEPARTMENT OF ENVIRONMENTAL PROTECTION
Standard Grant Agreement

This Agreement is entered into between the Parties named below, pursuant to Section 215.971, Florida Statutes:

1. Project Title (Project): **Polk Regional Water Cooperative Heartland Headwaters Protection and Sustainability**
Agreement Number: **LPA0212**

2. Parties: **State of Florida Department of Environmental Protection, 3900 Commonwealth Boulevard, Tallahassee, Florida 32399-3000** (Department)
Grantee Name: **Polk Regional Water Cooperative**
Entity Type: **Local Government**
Grantee Address: **300 W. Church Street, Bartow, FL 33831-9005**
FEID: **81-3584103** (Grantee)

3. Agreement Begin Date: **Upon Execution**
Date of Expiration: **December 31, 2023**

4. Project Number: *(If different from Agreement Number)*
Project Location(s): **Lat/Long (28.0439, -81.957)**
Project Description: **The Grantee (PRWC) will complete several projects that are a part of the Heartland Headwaters Protection and Sustainability Act, and that are needed to protect and restore the region's water sources.**

5. Total Amount of Funding: **$7,000,000.00**

Funding Source?	Award #s or Line Item Appropriations:	Amount per Source(s):
☑ State ☐ Federal	**LP, GAA Line Item 1607A, FY21-22, GR**	**$7,000,000.00**
☑ State ☐ Federal	**LP, GAA Line Item 1657A, FY19-20, GR**	**$122,052.00**
☐ Grantee Match		
	Total Amount of Funding + Grantee Match, if any:	**$7,122,052.00**

6. Department's Grant Manager
Name: **Gabby Vega-Molnar** or successor
Address: **3900 Commonwealth Blvd. MS 3602 Tallahassee, FL 32399**
Phone: **850-245-2914**
Email: **gabriela.vegamolnar@floridadep.gov**

Grantee's Grant Manager
Name: **Charles Richards** or successor
Address: **PO Box 9005 Drawer CA01 Bartow, FL 33831**
Phone: **863-298-4135**
Email: **charlesrichards@polk-county.net**

7. The Parties agree to comply with the terms and conditions of the following attachments and exhibits which are hereby incorporated by reference:

- ☑ Attachment 1: Standard Terms and Conditions Applicable to All Grants Agreements
- ☑ Attachment 2: Special Terms and Conditions
- ☑ Attachment 3: Grant Work Plan
- ☑ Attachment 4: Public Records Requirements
- ☑ Attachment 5: Special Audit Requirements
- ☐ Attachment 6: Program-Specific Requirements
- ☐ Attachment 7: Grant Award Terms (Federal) *Copy available at https://facts.fldfs.com, in accordance with §215.985, F.S.
- ☐ Attachment 8: Federal Regulations and Terms (Federal)
- ☐ Additional Attachments (if necessary):
- ☑ Exhibit A: Progress Report Form
- ☐ Exhibit B: Property Reporting Form
- ☑ Exhibit C: Payment Request Summary Form
- ☐ Exhibit D: Quality Assurance Requirements for Grants
- ☐ Exhibit E: Advance Payment Terms and Interest Earned Memo
- ☑ Additional Exhibits (if necessary): **Exhibit F: Memorandum of Grant**

8. The following information applies to Federal Grants only and is identified in accordance with 2 CFR 200.331(a)(1):

Federal Award Identification Number(s) (FAIN):	
Federal Award Date to Department:	
Total Federal Funds Obligated by this Agreement:	
Federal Awarding Agency:	
Award R&D?	☐ Yes ☐N/A

IN WITNESS WHEREOF, this Agreement shall be effective on the date indicated by the Agreement Begin Date above or the last date signed below, whichever is later.

Polk Regional Water Cooperative **GRANTEE**

Grantee Name

By _____ 7/13/2022

(Authorized Signature) Date Signed

Eric DeHaven, Executive Director

Print Name and Title of Person Signing

State of Florida Department of Environmental Protection **DEPARTMENT**

By _____ 7-28-22

Secretary or Designee Date Signed

Angela Knecht, Director of Water Restoration Assistance

Print Name and Title of Person Signing

☑ Additional signatures attached on separate page.

DWRA Additional Signatures

Gabby Vega-Molnar, DEP Grant Manager

Sandra Waters, DEP QC Reviewer

STATE OF FLORIDA
DEPARTMENT OF ENVIRONMENTAL PROTECTION
STANDARD TERMS AND CONDITIONS
APPLICABLE TO GRANT AGREEMENTS

ATTACHMENT 1

1. Entire Agreement.

This Grant Agreement, including any Attachments and Exhibits referred to herein and/or attached hereto (Agreement), constitutes the entire agreement between the parties with respect to the subject matter hereof and supersedes all prior agreements, whether written or oral, with respect to such subject matter. Any terms and conditions included on Grantee's forms or invoices shall be null and void.

2. Grant Administration.

a. Order of Precedence. If there are conflicting provisions among the documents that make up the Agreement, the order of precedence for interpretation of the Agreement is as follows:
   i. Standard Grant Agreement
   ii. Attachments other than Attachment 1, in numerical order as designated in the Standard Grant Agreement
   iii. Attachment 1, Standard Terms and Conditions
   iv. The Exhibits in the order designated in the Standard Grant Agreement

b. All approvals, written or verbal, and other written communication among the parties, including all notices, shall be obtained by or sent to the parties' Grant Managers. All written communication shall be by electronic mail, U.S. Mail, a courier delivery service, or delivered in person. Notices shall be considered delivered when reflected by an electronic mail read receipt, a courier service delivery receipt, other mail service delivery receipt, or when receipt is acknowledged by recipient. If the notice is delivered in multiple ways, the notice will be considered delivered at the earliest delivery time.

c. If a different Grant Manager is designated by either party after execution of this Agreement, notice of the name and contact information of the new Grant Manager will be submitted in writing to the other party and maintained in the respective parties' records. A change of Grant Manager does not require a formal amendment or change order to the Agreement.

d. This Agreement may be amended, through a formal amendment or a change order, only by a written agreement between both parties. A formal amendment to this Agreement is required for changes which cause any of the following:
   (1) an increase or decrease in the Agreement funding amount;
   (2) a change in Grantee's match requirements;
   (3) a change in the expiration date of the Agreement; and/or
   (4) changes to the cumulative amount of funding transfers between approved budget categories, as defined in Attachment 3, Grant Work Plan, that exceeds or is expected to exceed twenty percent (20%) of the total budget as last approved by Department.
   A change order to this Agreement may be used when:
   (1) task timelines within the current authorized Agreement period change;
   (2) the cumulative transfer of funds between approved budget categories, as defined in Attachment 3, Grant Work Plan, are less than twenty percent (20%) of the total budget as last approved by Department;
   (3) changing the current funding source as stated in the Standard Grant Agreement; and/or
   (4) fund transfers between budget categories for the purposes of meeting match requirements.
   This Agreement may be amended to provide for additional services if additional funding is made available by the Legislature.

e. All days in this Agreement are calendar days unless otherwise specified.

3. Agreement Duration.

The term of the Agreement shall begin and end on the dates indicated in the Standard Grant Agreement, unless extended or terminated earlier in accordance with the applicable terms and conditions. The Grantee shall be eligible for reimbursement for work performed on or after the date of execution through the expiration date of this Agreement, unless otherwise specified in Attachment 2, Special Terms and Conditions. However, work performed prior to the execution of this Agreement may be reimbursable or used for match purposes if permitted by the Special Terms and Conditions.

4. Deliverables.

The Grantee agrees to render the services or other units of deliverables as set forth in Attachment 3, Grant Work Plan. The services or other units of deliverables shall be delivered in accordance with the schedule and at the pricing outlined in the Grant Work Plan. Deliverables may be comprised of activities that must be completed prior to Department making payment on that deliverable. The Grantee agrees to perform in accordance with the terms and conditions set forth in this Agreement and all attachments and exhibits incorporated by the Standard Grant Agreement.

5. Performance Measures.

The Grantee warrants that: (1) the services will be performed by qualified personnel; (2) the services will be of the kind and quality described in the Grant Work Plan; (3) the services will be performed in a professional and workmanlike manner in accordance with industry standards and practices; (4) the services shall not and do not knowingly infringe upon the intellectual property rights, or any other proprietary rights, of any third party; and (5) its employees, subcontractors, and/or subgrantees shall comply with any security and safety requirements and processes, if provided by Department, for work done at the Project Location(s). The Department reserves the right to investigate or inspect at any time to determine whether the services or qualifications offered by Grantee meet the Agreement requirements. Notwithstanding any provisions herein to the contrary, written acceptance of a particular deliverable does not foreclose Department's remedies in the event deficiencies in the deliverable cannot be readily measured at the time of delivery.

6. Acceptance of Deliverables.

a. Acceptance Process. All deliverables must be received and accepted in writing by Department's Grant Manager before payment. The Grantee shall work diligently to correct all deficiencies in the deliverable that remain outstanding, within a reasonable time at Grantee's expense. If Department's Grant Manager does not accept the deliverables within 30 days of receipt, they will be deemed rejected.

b. Rejection of Deliverables. The Department reserves the right to reject deliverables, as outlined in the Grant Work Plan, as incomplete, inadequate, or unacceptable due, in whole or in part, to Grantee's lack of satisfactory performance under the terms of this Agreement. The Grantee's efforts to correct the rejected deliverables will be at Grantee's sole expense. Failure to fulfill the applicable technical requirements or complete all tasks or activities in accordance with the Grant Work Plan will result in rejection of the deliverable and the associated invoice. Payment for the rejected deliverable will not be issued unless the rejected deliverable is made acceptable to Department in accordance with the Agreement requirements. The Department, at its option, may allow additional time within which Grantee may remedy the objections noted by Department. The Grantee's failure to make adequate or acceptable deliverables after a reasonable opportunity to do so shall constitute an event of default.

7. Financial Consequences for Nonperformance.

a. Withholding Payment. In addition to the specific consequences explained in the Grant Work Plan and/or Special Terms and Conditions, the State of Florida (State) reserves the right to withhold payment when the Grantee has failed to perform/comply with provisions of this Agreement. None of the financial consequences for nonperformance in this Agreement as more fully described in the Grant Work Plan shall be considered penalties.

b. Corrective Action Plan. If Grantee fails to correct all the deficiencies in a rejected deliverable within the specified timeframe, Department may, in its sole discretion, request that a proposed Corrective Action Plan (CAP) be submitted by Grantee to Department. The Department requests that Grantee specify the outstanding deficiencies in the CAP. All CAPs must be able to be implemented and performed in no more than sixty (60) calendar days.

    i. The Grantee shall submit a CAP within ten (10) days of the date of the written request from Department. The CAP shall be sent to the Department's Grant Manager for review and approval. Within ten (10) days of receipt of a CAP, Department shall notify Grantee in writing whether the CAP proposed has been accepted. If the CAP is not accepted, Grantee shall have ten (10) days from receipt of Department letter rejecting the proposal to submit a revised proposed CAP. Failure to obtain Department approval of a CAP as specified above may result in Department's termination of this Agreement for cause as authorized in this Agreement.

    ii. Upon Department's notice of acceptance of a proposed CAP, Grantee shall have ten (10) days to commence implementation of the accepted plan. Acceptance of the proposed CAP by Department does not relieve Grantee of any of its obligations under the Agreement. In the event the CAP fails to correct or eliminate performance deficiencies by Grantee, Department shall retain the right to require additional or further remedial steps, or to terminate this Agreement for failure to perform. No actions approved by Department or steps taken by Grantee shall preclude Department from subsequently asserting any deficiencies in performance. The Grantee shall continue to implement

the CAP until all deficiencies are corrected. Reports on the progress of the CAP will be made to Department as requested by Department's Grant Manager.

iii. Failure to respond to a Department request for a CAP or failure to correct a deficiency in the performance of the Agreement as specified by Department may result in termination of the Agreement.

8. Payment.

a. Payment Process. Subject to the terms and conditions established by the Agreement, the pricing per deliverable established by the Grant Work Plan, and the billing procedures established by Department, Department agrees to pay Grantee for services rendered in accordance with Section 215.422, Florida Statutes (F.S.).

b. Taxes. The Department is exempted from payment of State sales, use taxes and Federal excise taxes. The Grantee, however, shall not be exempted from paying any taxes that it is subject to, including State sales and use taxes, or for payment by Grantee to suppliers for taxes on materials used to fulfill its contractual obligations with Department. The Grantee shall not use Department's exemption number in securing such materials. The Grantee shall be responsible and liable for the payment of all its FICA/Social Security and other taxes resulting from this Agreement.

c. Maximum Amount of Agreement. The maximum amount of compensation under this Agreement, without an amendment, is described in the Standard Grant Agreement. Any additional funds necessary for the completion of this Project are the responsibility of Grantee.

d. Reimbursement for Costs. The Grantee shall be paid on a cost reimbursement basis for all eligible Project costs upon the completion, submittal, and approval of each deliverable identified in the Grant Work Plan. Reimbursement shall be requested on Exhibit C, Payment Request Summary Form. To be eligible for reimbursement, costs must be in compliance with laws, rules, and regulations applicable to expenditures of State funds, including, but not limited to, the Reference Guide for State Expenditures, which can be accessed at the following web address: https://www.myfloridacfo.com/Division/AA/Manuals/documents/ReferenceGuideforStateExpenditures.pdf.

e. Invoice Detail. All charges for services rendered or for reimbursement of expenses authorized by Department pursuant to the Grant Work Plan shall be submitted to Department in sufficient detail for a proper pre-audit and post-audit to be performed. The Grantee shall only invoice Department for deliverables that are completed in accordance with the Grant Work Plan.

f. Interim Payments. Interim payments may be made by Department, at its discretion, if the completion of deliverables to date have first been accepted in writing by Department's Grant Manager.

g. Final Payment Request. A final payment request should be submitted to Department no later than sixty (60) days following the expiration date of the Agreement to ensure the availability of funds for payment. However, all work performed pursuant to the Grant Work Plan must be performed on or before the expiration date of the Agreement.

h. Annual Appropriation Contingency. The State's performance and obligation to pay under this Agreement is contingent upon an annual appropriation by the Legislature. This Agreement is not a commitment of future appropriations. Authorization for continuation and completion of work and any associated payments may be rescinded, with proper notice, at the discretion of Department if the Legislature reduces or eliminates appropriations.

i. Interest Rates. All interest rates charged under the Agreement shall be calculated on the prevailing rate used by the State Board of Administration. To obtain the applicable interest rate, please refer to: www.myfloridacfo.com/Division/AA/Vendors/default.htm.

j. Refund of Payments to the Department. Any balance of unobligated funds that have been advanced or paid must be refunded to Department. Any funds paid in excess of the amount to which Grantee or subgrantee is entitled under the terms of the Agreement must be refunded to Department. If this Agreement is funded with federal funds and the Department is required to refund the federal government, the Grantee shall refund the Department its share of those funds.

9. Documentation Required for Cost Reimbursement Grant Agreements and Match.

If Cost Reimbursement or Match is authorized in Attachment 2, Special Terms and Conditions, the following conditions apply. Supporting documentation must be provided to substantiate cost reimbursement or match requirements for the following budget categories:

a. Salary/Wages. Grantee shall list personnel involved, position classification, direct salary rates, and hours spent on the Project in accordance with Attachment 3, Grant Work Plan in their documentation for reimbursement or match requirements.

b. Overhead/Indirect/General and Administrative Costs. If Grantee is being reimbursed for or claiming match for multipliers, all multipliers used (i.e., fringe benefits, overhead, indirect, and/or general and administrative rates) shall be supported by audit. If Department determines that multipliers charged by Grantee exceeded the rates supported by audit, Grantee shall be required to reimburse such funds to Department within thirty (30) days of written notification. Interest shall be charged on the excessive rate.

c. Contractual Costs (Subcontractors). Match or reimbursement requests for payments to subcontractors must be substantiated by copies of invoices with backup documentation identical to that required from Grantee. Subcontracts which involve payments for direct salaries shall clearly identify the personnel involved, salary rate per hour, and hours spent on the Project. All eligible multipliers used (i.e., fringe benefits, overhead, indirect, and/or general and administrative rates) shall be supported by audit. If Department determines that multipliers charged by any subcontractor exceeded the rates supported by audit, Grantee shall be required to reimburse such funds to Department within thirty (30) days of written notification. Interest shall be charged on the excessive rate. Nonconsumable and/or nonexpendable personal property or equipment costing $5,000 or more purchased for the Project under a subcontract is subject to the requirements set forth in Chapters 273 and/or 274, F.S., and Chapter 69I-72, Florida Administrative Code (F.A.C.) and/or Chapter 69I-73, F.A.C., as applicable. The Grantee shall be responsible for maintaining appropriate property records for any subcontracts that include the purchase of equipment as part of the delivery of services. The Grantee shall comply with this requirement and ensure its subcontracts issued under this Agreement, if any, impose this requirement, in writing, on its subcontractors.
    i. For fixed-price (vendor) subcontracts, the following provisions shall apply: The Grantee may award, on a competitive basis, fixed-price subcontracts to consultants/contractors in performing the work described in Attachment 3, Grant Work Plan. Invoices submitted to Department for fixed-price subcontracted activities shall be supported with a copy of the subcontractor's invoice and a copy of the tabulation form for the competitive procurement process (e.g., Invitation to Bid, Request for Proposals, or other similar competitive procurement document) resulting in the fixed-price subcontract. The Grantee may request approval from Department to award a fixed-price subcontract resulting from procurement methods other than those identified above. In this instance, Grantee shall request the advance written approval from Department's Grant Manager of the fixed price negotiated by Grantee. The letter of request shall be supported by a detailed budget and Scope of Services to be performed by the subcontractor. Upon receipt of Department Grant Manager's approval of the fixed-price amount, Grantee may proceed in finalizing the fixed-price subcontract.
    ii. If the procurement is subject to the Consultant's Competitive Negotiation Act under section 287.055, F.S. or the Brooks Act, Grantee must provide documentation clearly evidencing it has complied with the statutory or federal requirements.

d. Travel. All requests for match or reimbursement of travel expenses shall be in accordance with Section 112.061, F.S.

e. Direct Purchase Equipment. For the purposes of this Agreement, Equipment is defined as capital outlay costing $5,000 or more. Match or reimbursement for Grantee's direct purchase of equipment is subject to specific approval of Department, and does not include any equipment purchased under the delivery of services to be completed by a subcontractor. Include copies of invoices or receipts to document purchases, and a properly completed Exhibit B, Property Reporting Form**.**

f. Rental/Lease of Equipment. Match or reimbursement requests for rental/lease of equipment must include copies of invoices or receipts to document charges.

g. Miscellaneous/Other Expenses. If miscellaneous or other expenses, such as materials, supplies, non-excluded phone expenses, reproduction, or mailing, are reimbursable or available for match or reimbursement under the terms of this Agreement, the documentation supporting these expenses must be itemized and include copies of receipts or invoices. Additionally, independent of Grantee's contract obligations to its subcontractor, Department shall not reimburse any of the following types of charges: cell phone usage; attorney's fees or court costs; civil or administrative penalties; or handling fees, such as set percent overages associated with purchasing supplies or equipment.

h. Land Acquisition. Reimbursement for the costs associated with acquiring interest and/or rights to real property (including access rights through ingress/egress easements, leases, license agreements, or other site access agreements; and/or obtaining record title ownership of real property through purchase) must be supported by the following, as applicable: Copies of Property Appraisals, Environmental Site Assessments, Surveys and Legal Descriptions, Boundary Maps, Acreage Certification, Title Search Reports, Title Insurance, Closing Statements/Documents, Deeds, Leases, Easements, License Agreements, or other legal instrument documenting

acquired property interest and/or rights. If land acquisition costs are used to meet match requirements, Grantee agrees that those funds shall not be used as match for any other Agreement supported by State or Federal funds.

10. Status Reports.

The Grantee shall submit status reports quarterly, unless otherwise specified in the Attachments, on Exhibit A, Progress Report Form**,** to Department's Grant Manager describing the work performed during the reporting period, problems encountered, problem resolutions, scheduled updates, and proposed work for the next reporting period. Quarterly status reports are due no later than twenty (20) days following the completion of the quarterly reporting period. For the purposes of this reporting requirement, the quarterly reporting periods end on March 31, June 30, September 30 and December 31. The Department will review the required reports submitted by Grantee within thirty (30) days.

11. Retainage.

The following provisions apply if Department withholds retainage under this Agreement:

a. The Department reserves the right to establish the amount and application of retainage on the work performed under this Agreement up to the maximum percentage described in Attachment 2, Special Terms and Conditions. Retainage may be withheld from each payment to Grantee pending satisfactory completion of work and approval of all deliverables.

b. If Grantee fails to perform the requested work, or fails to perform the work in a satisfactory manner, Grantee shall forfeit its right to payment of the retainage associated with the work. Failure to perform includes, but is not limited to, failure to submit the required deliverables or failure to provide adequate documentation that the work was actually performed. The Department shall provide written notification to Grantee of the failure to perform that shall result in retainage forfeiture. If the Grantee does not correct the failure to perform within the timeframe stated in Department's notice, the retainage will be forfeited to Department.

c. No retainage shall be released or paid for incomplete work while this Agreement is suspended.

d. Except as otherwise provided above, Grantee shall be paid the retainage associated with the work, provided Grantee has completed the work and submits an invoice for retainage held in accordance with the invoicing procedures under this Agreement.

12. Insurance.

a. Insurance Requirements for Sub-Grantees and/or Subcontractors. The Grantee shall require its sub-grantees and/or subcontractors, if any, to maintain insurance coverage of such types and with such terms and limits as described in this Agreement. The Grantee shall require all its sub-grantees and/or subcontractors, if any, to make compliance with the insurance requirements of this Agreement a condition of all contracts that are related to this Agreement. Sub-grantees and/or subcontractors must provide proof of insurance upon request.

b. Deductibles. The Department shall be exempt from, and in no way liable for, any sums of money representing a deductible in any insurance policy. The payment of such deductible shall be the sole responsibility of the Grantee providing such insurance.

c. Proof of Insurance. Upon execution of this Agreement, Grantee shall provide Department documentation demonstrating the existence and amount for each type of applicable insurance coverage ***prior to*** performance of any work under this Agreement. Upon receipt of written request from Department, Grantee shall furnish Department with proof of applicable insurance coverage by standard form certificates of insurance, a self-insured authorization, or other certification of self-insurance.

d. Duty to Maintain Coverage. In the event that any applicable coverage is cancelled by the insurer for any reason, or if Grantee cannot get adequate coverage, Grantee shall immediately notify Department of such cancellation and shall obtain adequate replacement coverage conforming to the requirements herein and provide proof of such replacement coverage within ten (10) days after the cancellation of coverage.

e. Insurance Trust. If the Grantee's insurance is provided through an insurance trust, the Grantee shall instead add the Department of Environmental Protection, its employees, and officers as an additional covered party everywhere the Agreement requires them to be added as an additional insured.

13. Termination.

a. Termination for Convenience. When it is in the State's best interest, Department may, at its sole discretion, terminate the Agreement in whole or in part by giving 30 days' written notice to Grantee. The Department shall notify Grantee of the termination for convenience with instructions as to the effective date of termination or the specific stage of work at which the Agreement is to be terminated. The Grantee must submit all invoices for work to be paid under this Agreement within thirty (30) days of the effective date of termination. The Department shall not pay any invoices received after thirty (30) days of the effective date of termination.

b. Termination for Cause. The Department may terminate this Agreement if any of the events of default described in the Events of Default provisions below occur or in the event that Grantee fails to fulfill any of its other

obligations under this Agreement. If, after termination, it is determined that Grantee was not in default, or that the default was excusable, the rights and obligations of the parties shall be the same as if the termination had been issued for the convenience of Department. The rights and remedies of Department in this clause are in addition to any other rights and remedies provided by law or under this Agreement.

c. Grantee Obligations upon Notice of Termination. After receipt of a notice of termination or partial termination unless as otherwise directed by Department, Grantee shall not furnish any service or deliverable on the date, and to the extent specified, in the notice. However, Grantee shall continue work on any portion of the Agreement not terminated. If the Agreement is terminated before performance is completed, Grantee shall be paid only for that work satisfactorily performed for which costs can be substantiated. The Grantee shall not be entitled to recover any cancellation charges or lost profits.
d. Continuation of Prepaid Services. If Department has paid for any services prior to the expiration, cancellation, or termination of the Agreement, Grantee shall continue to provide Department with those services for which it has already been paid or, at Department's discretion, Grantee shall provide a refund for services that have been paid for but not rendered.
e. Transition of Services Upon Termination, Expiration, or Cancellation of the Agreement. If services provided under the Agreement are being transitioned to another provider(s), Grantee shall assist in the smooth transition of Agreement services to the subsequent provider(s). This requirement is at a minimum an affirmative obligation to cooperate with the new provider(s), however additional requirements may be outlined in the Grant Work Plan. The Grantee shall not perform any services after Agreement expiration or termination, except as necessary to complete the transition or continued portion of the Agreement, if any.

14. Notice of Default.

If Grantee defaults in the performance of any covenant or obligation contained in the Agreement, including, any of the events of default, Department shall provide notice to Grantee and an opportunity to cure that is reasonable under the circumstances. This notice shall state the nature of the failure to perform and provide a time certain for correcting the failure. The notice will also provide that, should the Grantee fail to perform within the time provided, Grantee will be found in default, and Department may terminate the Agreement effective as of the date of receipt of the default notice.

15. Events of Default.

Provided such failure is not the fault of Department or outside the reasonable control of Grantee, the following non-exclusive list of events, acts, or omissions, shall constitute events of default:

a. The commitment of any material breach of this Agreement by Grantee, including failure to timely deliver a material deliverable, failure to perform the minimal level of services required for a deliverable, discontinuance of the performance of the work, failure to resume work that has been discontinued within a reasonable time after notice to do so, or abandonment of the Agreement;
b. The commitment of any material misrepresentation or omission in any materials, or discovery by the Department of such, made by the Grantee in this Agreement or in its application for funding;
c. Failure to submit any of the reports required by this Agreement or having submitted any report with incorrect, incomplete, or insufficient information;
d. Failure to honor any term of the Agreement;
e. Failure to abide by any statutory, regulatory, or licensing requirement, including an entry of an order revoking the certificate of authority granted to the Grantee by a state or other licensing authority;
f. Failure to pay any and all entities, individuals, and furnishing labor or materials, or failure to make payment to any other entities as required by this Agreement;
g. Employment of an unauthorized alien in the performance of the work, in violation of Section 274 (A) of the Immigration and Nationality Act;
h. Failure to maintain the insurance required by this Agreement;
i. One or more of the following circumstances, uncorrected for more than thirty (30) days unless, within the specified 30-day period, Grantee (including its receiver or trustee in bankruptcy) provides to Department adequate assurances, reasonably acceptable to Department, of its continuing ability and willingness to fulfill its obligations under the Agreement:
    i. Entry of an order for relief under Title 11 of the United States Code;
    ii. The making by Grantee of a general assignment for the benefit of creditors;
    iii. The appointment of a general receiver or trustee in bankruptcy of Grantee's business or property; and/or
    iv. An action by Grantee under any state insolvency or similar law for the purpose of its bankruptcy, reorganization, or liquidation.

16. Suspension of Work.

The Department may, in its sole discretion, suspend any or all activities under the Agreement, at any time, when it is in the best interest of the State to do so. The Department shall provide Grantee written notice outlining the particulars of suspension. Examples of reasons for suspension include, but are not limited to, budgetary constraints, declaration of emergency, or other such circumstances. After receiving a suspension notice, Grantee shall comply with the notice. Within 90 days, or any longer period agreed to by the parties, Department shall either: (1) issue a notice authorizing resumption of work, at which time activity shall resume; or (2) terminate the Agreement. If the Agreement is terminated after 30 days of suspension, the notice of suspension shall be deemed to satisfy the thirty (30) days' notice required for a notice of termination for convenience. Suspension of work shall not entitle Grantee to any additional compensation.

17. Force Majeure.

The Grantee shall not be responsible for delay resulting from its failure to perform if neither the fault nor the negligence of Grantee or its employees or agents contributed to the delay and the delay is due directly to acts of God, wars, acts of public enemies, strikes, fires, floods, or other similar cause wholly beyond Grantee's control, or for any of the foregoing that affect subcontractors or suppliers if no alternate source of supply is available to Grantee. In case of any delay Grantee believes is excusable, Grantee shall notify Department in writing of the delay or potential delay and describe the cause of the delay either (1) within ten days after the cause that creates or will create the delay first arose, if Grantee could reasonably foresee that a delay could occur as a result; or (2) if delay is not reasonably foreseeable, within five days after the date Grantee first had reason to believe that a delay could result. **THE FOREGOING SHALL CONSTITUTE THE GRANTEE'S SOLE REMEDY OR EXCUSE WITH RESPECT TO DELAY**. Providing notice in strict accordance with this paragraph is a condition precedent to such remedy. No claim for damages, other than for an extension of time, shall be asserted against Department. The Grantee shall not be entitled to an increase in the Agreement price or payment of any kind from Department for direct, indirect, consequential, impact or other costs, expenses or damages, including but not limited to costs of acceleration or inefficiency, arising because of delay, disruption, interference, or hindrance from any cause whatsoever. If performance is suspended or delayed, in whole or in part, due to any of the causes described in this paragraph, after the causes have ceased to exist Grantee shall perform at no increased cost, unless Department determines, in its sole discretion, that the delay will significantly impair the value of the Agreement to Department, in which case Department may: (1) accept allocated performance or deliveries from Grantee, provided that Grantee grants preferential treatment to Department with respect to products subjected to allocation; (2) contract with other sources (without recourse to and by Grantee for the related costs and expenses) to replace all or part of the products or services that are the subject of the delay, which purchases may be deducted from the Agreement quantity; or (3) terminate Agreement in whole or in part.

18. Indemnification.

a. The Grantee shall be fully liable for the actions of its agents, employees, partners, or subcontractors and shall fully indemnify, defend, and hold harmless Department and its officers, agents, and employees, from suits, actions, damages, and costs of every name and description arising from or relating to:
    i. personal injury and damage to real or personal tangible property alleged to be caused in whole or in part by Grantee, its agents, employees, partners, or subcontractors; provided, however, that Grantee shall not indemnify for that portion of any loss or damages proximately caused by the negligent act or omission of Department;
    ii. the Grantee's breach of this Agreement or the negligent acts or omissions of Grantee.

b. The Grantee's obligations under the preceding paragraph with respect to any legal action are contingent upon Department giving Grantee: (1) written notice of any action or threatened action; (2) the opportunity to take over and settle or defend any such action at Grantee's sole expense; and (3) assistance in defending the action at Grantee's sole expense. The Grantee shall not be liable for any cost, expense, or compromise incurred or made by Department in any legal action without Grantee's prior written consent, which shall not be unreasonably withheld.

c. Notwithstanding sections a. and b. above, the following is the sole indemnification provision that applies to Grantees that are governmental entities: Each party hereto agrees that it shall be solely responsible for the negligent or wrongful acts of its employees and agents. However, nothing contained herein shall constitute a waiver by either party of its sovereign immunity or the provisions of Section 768.28, F.S. Further, nothing herein shall be construed as consent by a state agency or subdivision of the State to be sued by third parties in any matter arising out of any contract or this Agreement.

d. No provision in this Agreement shall require Department to hold harmless or indemnify Grantee, insure or assume liability for Grantee's negligence, waive Department's sovereign immunity under the laws of Florida, or

otherwise impose liability on Department for which it would not otherwise be responsible. Any provision, implication or suggestion to the contrary is null and void.

19. Limitation of Liability.

The Department's liability for any claim arising from this Agreement is limited to compensatory damages in an amount no greater than the sum of the unpaid balance of compensation due for goods or services rendered pursuant to and in compliance with the terms of the Agreement. Such liability is further limited to a cap of $100,000.

20. Remedies.

Nothing in this Agreement shall be construed to make Grantee liable for force majeure events. Nothing in this Agreement, including financial consequences for nonperformance, shall limit Department's right to pursue its remedies for other types of damages under the Agreement, at law or in equity. The Department may, in addition to other remedies available to it, at law or in equity and upon notice to Grantee, retain such monies from amounts due Grantee as may be necessary to satisfy any claim for damages, penalties, costs and the like asserted by or against it.

21. Waiver.

The delay or failure by Department to exercise or enforce any of its rights under this Agreement shall not constitute or be deemed a waiver of Department's right thereafter to enforce those rights, nor shall any single or partial exercise of any such right preclude any other or further exercise thereof or the exercise of any other right.

22. Statutory Notices Relating to Unauthorized Employment and Subcontracts.

a. The Department shall consider the employment by any Grantee of unauthorized aliens a violation of Section 274A(e) of the Immigration and Nationality Act. If Grantee/subcontractor knowingly employs unauthorized aliens, such violation shall be cause for unilateral cancellation of this Agreement. The Grantee shall be responsible for including this provision in all subcontracts with private organizations issued as a result of this Agreement.

b. Pursuant to Sections 287.133, 287.134, and 287.137 F.S., the following restrictions apply to persons placed on the convicted vendor list, discriminatory vendor list, or the antitrust violator vendor list:

   i. Public Entity Crime. A person or affiliate who has been placed on the convicted vendor list following a conviction for a public entity crime may not submit a bid, proposal, or reply on a contract to provide any goods or services to a public entity; may not submit a bid, proposal, or reply on a contract with a public entity for the construction or repair of a public building or public work; may not submit bids, proposals, or replies on leases of real property to a public entity; may not be awarded or perform work as a Grantee, supplier, subcontractor, or consultant under a contract with any public entity; and may not transact business with any public entity in excess of the threshold amount provided in Section 287.017, F.S., for CATEGORY TWO for a period of 36 months following the date of being placed on the convicted vendor list.

   ii. Discriminatory Vendors. An entity or affiliate who has been placed on the discriminatory vendor list may not submit a bid, proposal, or reply on a contract to provide any goods or services to a public entity; may not submit a bid, proposal, or reply on a contract with a public entity for the construction or repair of a public building or public work; may not submit bids, proposals, or replies on leases of real property to a public entity; may not be awarded or perform work as a contractor, supplier, subcontractor, or consultant under a contract with any public entity; and may not transact business with any public entity.

   iii. Antitrust Violator Vendors. A person or an affiliate who has been placed on the antitrust violator vendor list following a conviction or being held civilly liable for an antitrust violation may not submit a bid, proposal, or reply on any contract to provide any good or services to a public entity; may not submit a bid, proposal, or reply on any contract with a public entity for the construction or repair of a public building or public work; may not submit a bid, proposal, or reply on leases of real property to a public entity; may not be awarded or perform work as a Grantee, supplier, subcontractor, or consultant under a contract with a public entity; and may not transact new business with a public entity.

   iv. Notification. The Grantee shall notify Department if it or any of its suppliers, subcontractors, or consultants have been placed on the convicted vendor list, the discriminatory vendor list, or antitrust violator vendor list during the life of the Agreement. The Florida Department of Management Services is responsible for maintaining the discriminatory vendor list and the antitrust violator vendor list and posts the list on its website. Questions regarding the discriminatory vendor list or antitrust violator vendor list may be directed to the Florida Department of Management Services, Office of Supplier Diversity, at (850) 487-0915.

23. Compliance with Federal, State and Local Laws.

a. The Grantee and all its agents shall comply with all federal, state and local regulations, including, but not limited to, nondiscrimination, wages, social security, workers' compensation, licenses, and registration requirements. The Grantee shall include this provision in all subcontracts issued as a result of this Agreement.
b. No person, on the grounds of race, creed, color, religion, national origin, age, gender, or disability, shall be excluded from participation in; be denied the proceeds or benefits of; or be otherwise subjected to discrimination in performance of this Agreement.
c. This Agreement shall be governed by and construed in accordance with the laws of the State of Florida.
d. Any dispute concerning performance of the Agreement shall be processed as described herein. Jurisdiction for any damages arising under the terms of the Agreement will be in the courts of the State, and venue will be in the Second Judicial Circuit, in and for Leon County. Except as otherwise provided by law, the parties agree to be responsible for their own attorney fees incurred in connection with disputes arising under the terms of this Agreement.

24. Scrutinized Companies.

a. Grantee certifies that it is not on the Scrutinized Companies that Boycott Israel List or engaged in a boycott of Israel. Pursuant to Section 287.135, F.S., the Department may immediately terminate this Agreement at its sole option if the Grantee is found to have submitted a false certification; or if the Grantee is placed on the Scrutinized Companies that Boycott Israel List or is engaged in the boycott of Israel during the term of the Agreement.
b. If this Agreement is for more than one million dollars, the Grantee certifies that it is also not on the Scrutinized Companies with Activities in Sudan, Scrutinized Companies with Activities in the Iran Petroleum Energy Sector List, or engaged with business operations in Cuba or Syria as identified in Section 287.135, F.S. Pursuant to Section 287.135, F.S., the Department may immediately terminate this Agreement at its sole option if the Grantee is found to have submitted a false certification; or if the Grantee is placed on the Scrutinized Companies with Activities in Sudan List, or Scrutinized Companies with Activities in the Iran Petroleum Energy Sector List, or engaged with business operations in Cuba or Syria during the term of the Agreement.
c. As provided in Subsection 287.135(8), F.S., if federal law ceases to authorize these contracting prohibitions then they shall become inoperative.

25. Lobbying and Integrity.

The Grantee agrees that no funds received by it under this Agreement will be expended for the purpose of lobbying the Legislature or a State agency pursuant to Section 216.347, F.S., except that pursuant to the requirements of Section 287.058(6), F.S., during the term of any executed agreement between Grantee and the State, Grantee may lobby the executive or legislative branch concerning the scope of services, performance, term, or compensation regarding that agreement. The Grantee shall comply with Sections 11.062 and 216.347, F.S.

26. Record Keeping.

The Grantee shall maintain books, records and documents directly pertinent to performance under this Agreement in accordance with United States generally accepted accounting principles (US GAAP) consistently applied. The Department, the State, or their authorized representatives shall have access to such records for audit purposes during the term of this Agreement and for five (5) years following the completion date or termination of the Agreement. In the event that any work is subcontracted, Grantee shall similarly require each subcontractor to maintain and allow access to such records for audit purposes. Upon request of Department's Inspector General, or other authorized State official, Grantee shall provide any type of information the Inspector General deems relevant to Grantee's integrity or responsibility. Such information may include, but shall not be limited to, Grantee's business or financial records, documents, or files of any type or form that refer to or relate to Agreement. The Grantee shall retain such records for the longer of: (1) three years after the expiration of the Agreement; or (2) the period required by the General Records Schedules maintained by the Florida Department of State (available at: http://dos.myflorida.com/library-archives/records-management/general-records-schedules/).

27. Audits.

a. Inspector General. The Grantee understands its duty, pursuant to Section 20.055(5), F.S., to cooperate with the inspector general in any investigation, audit, inspection, review, or hearing. The Grantee will comply with this duty and ensure that its sub-grantees and/or subcontractors issued under this Agreement, if any, impose this requirement, in writing, on its sub-grantees and/or subcontractors, respectively.
b. Physical Access and Inspection. Department personnel shall be given access to and may observe and inspect work being performed under this Agreement, with reasonable notice and during normal business hours, including by any of the following methods:
    i. Grantee shall provide access to any location or facility on which Grantee is performing work, or storing or staging equipment, materials or documents;

ii. Grantee shall permit inspection of any facility, equipment, practices, or operations required in performance of any work pursuant to this Agreement; and,
iii. Grantee shall allow and facilitate sampling and monitoring of any substances, soils, materials or parameters at any location reasonable or necessary to assure compliance with any work or legal requirements pursuant to this Agreement.

c. Special Audit Requirements. The Grantee shall comply with the applicable provisions contained in Attachment 5, Special Audit Requirements. Each amendment that authorizes a funding increase or decrease shall include an updated copy of Exhibit 1, to Attachment 5. If Department fails to provide an updated copy of Exhibit 1 to include in each amendment that authorizes a funding increase or decrease, Grantee shall request one from the Department's Grants Manager. The Grantee shall consider the type of financial assistance (federal and/or state) identified in Attachment 5, Exhibit 1 and determine whether the terms of Federal and/or Florida Single Audit Act Requirements may further apply to lower tier transactions that may be a result of this Agreement. For federal financial assistance, Grantee shall utilize the guidance provided under 2 CFR §200.330 for determining whether the relationship represents that of a subrecipient or vendor. For State financial assistance, Grantee shall utilize the form entitled "Checklist for Nonstate Organizations Recipient/Subrecipient vs Vendor Determination" (form number DFS-A2-NS) that can be found under the "Links/Forms" section appearing at the following website: https:\\apps.fldfs.com\fsaa.

d. Proof of Transactions. In addition to documentation provided to support cost reimbursement as described herein, Department may periodically request additional proof of a transaction to evaluate the appropriateness of costs to the Agreement pursuant to State guidelines (including cost allocation guidelines) and federal, if applicable. Allowable costs and uniform administrative requirements for federal programs can be found under 2 CFR 200. The Department may also request a cost allocation plan in support of its multipliers (overhead, indirect, general administrative costs, and fringe benefits). The Grantee must provide the additional proof within thirty (30) days of such request.

e. No Commingling of Funds. The accounting systems for all Grantees must ensure that these funds are not commingled with funds from other agencies. Funds from each agency must be accounted for separately. Grantees are prohibited from commingling funds on either a program-by-program or a project-by-project basis. Funds specifically budgeted and/or received for one project may not be used to support another project. Where a Grantee's, or subrecipient's, accounting system cannot comply with this requirement, Grantee, or subrecipient, shall establish a system to provide adequate fund accountability for each project it has been awarded.
    i. If Department finds that these funds have been commingled, Department shall have the right to demand a refund, either in whole or in part, of the funds provided to Grantee under this Agreement for non-compliance with the material terms of this Agreement. The Grantee, upon such written notification from Department shall refund, and shall forthwith pay to Department, the amount of money demanded by Department. Interest on any refund shall be calculated based on the prevailing rate used by the State Board of Administration. Interest shall be calculated from the date(s) the original payment(s) are received from Department by Grantee to the date repayment is made by Grantee to Department.
    ii. In the event that the Grantee recovers costs, incurred under this Agreement and reimbursed by Department, from another source(s), Grantee shall reimburse Department for all recovered funds originally provided under this Agreement and interest shall be charged for those recovered costs as calculated on from the date(s) the payment(s) are recovered by Grantee to the date repayment is made to Department.
    iii. Notwithstanding the requirements of this section, the above restrictions on commingling funds do not apply to agreements where payments are made purely on a cost reimbursement basis.

28. Conflict of Interest.

The Grantee covenants that it presently has no interest and shall not acquire any interest which would conflict in any manner or degree with the performance of services required.

29. Independent Contractor.

The Grantee is an independent contractor and is not an employee or agent of Department.

30. Subcontracting.

a. Unless otherwise specified in the Special Terms and Conditions, all services contracted for are to be performed solely by Grantee.

b. The Department may, for cause, require the replacement of any Grantee employee, subcontractor, or agent. For cause, includes, but is not limited to, technical or training qualifications, quality of work, change in security status, or non-compliance with an applicable Department policy or other requirement.

c. The Department may, for cause, deny access to Department's secure information or any facility by any Grantee employee, subcontractor, or agent.
d. The Department's actions under paragraphs b. or c. shall not relieve Grantee of its obligation to perform all work in compliance with the Agreement. The Grantee shall be responsible for the payment of all monies due under any subcontract. The Department shall not be liable to any subcontractor for any expenses or liabilities incurred under any subcontract and Grantee shall be solely liable to the subcontractor for all expenses and liabilities incurred under any subcontract.
e. The Department will not deny Grantee's employees, subcontractors, or agents access to meetings within the Department's facilities, unless the basis of Department's denial is safety or security considerations.
f. The Department supports diversity in its procurement program and requests that all subcontracting opportunities afforded by this Agreement embrace diversity enthusiastically. The award of subcontracts should reflect the full diversity of the citizens of the State. A list of minority-owned firms that could be offered subcontracting opportunities may be obtained by contacting the Office of Supplier Diversity at (850) 487-0915.
g. The Grantee shall not be liable for any excess costs for a failure to perform, if the failure to perform is caused by the default of a subcontractor at any tier, and if the cause of the default is completely beyond the control of both Grantee and the subcontractor(s), and without the fault or negligence of either, unless the subcontracted products or services were obtainable from other sources in sufficient time for Grantee to meet the required delivery schedule.

31. Guarantee of Parent Company.

If Grantee is a subsidiary of another corporation or other business entity, Grantee asserts that its parent company will guarantee all of the obligations of Grantee for purposes of fulfilling the obligations of Agreement. In the event Grantee is sold during the period the Agreement is in effect, Grantee agrees that it will be a requirement of sale that the new parent company guarantee all of the obligations of Grantee.

32. Survival.

The respective obligations of the parties, which by their nature would continue beyond the termination or expiration of this Agreement, including without limitation, the obligations regarding confidentiality, proprietary interests, and public records, shall survive termination, cancellation, or expiration of this Agreement.

33. Third Parties.

The Department shall not be deemed to assume any liability for the acts, failures to act or negligence of Grantee, its agents, servants, and employees, nor shall Grantee disclaim its own negligence to Department or any third party. This Agreement does not and is not intended to confer any rights or remedies upon any person other than the parties. If Department consents to a subcontract, Grantee will specifically disclose that this Agreement does not create any third-party rights. Further, no third parties shall rely upon any of the rights and obligations created under this Agreement.

34. Severability.

If a court of competent jurisdiction deems any term or condition herein void or unenforceable, the other provisions are severable to that void provision, and shall remain in full force and effect.

35. Grantee's Employees, Subcontractors and Agents.

All Grantee employees, subcontractors, or agents performing work under the Agreement shall be properly trained technicians who meet or exceed any specified training qualifications. Upon request, Grantee shall furnish a copy of technical certification or other proof of qualification. All employees, subcontractors, or agents performing work under Agreement must comply with all security and administrative requirements of Department and shall comply with all controlling laws and regulations relevant to the services they are providing under the Agreement.

36. Assignment.

The Grantee shall not sell, assign, or transfer any of its rights, duties, or obligations under the Agreement, or under any purchase order issued pursuant to the Agreement, without the prior written consent of Department. In the event of any assignment, Grantee remains secondarily liable for performance of the Agreement, unless Department expressly waives such secondary liability. The Department may assign the Agreement with prior written notice to Grantee of its intent to do so.

37. Compensation Report.

If this Agreement is a sole-source, public-private agreement or if the Grantee, through this agreement with the State, annually receive 50% or more of their budget from the State or from a combination of State and Federal funds, the Grantee shall provide an annual report, including the most recent IRS Form 990, detailing the total compensation for the entities' executive leadership teams. Total compensation shall include salary, bonuses, cashed-in leave, cash equivalents, severance pay, retirement benefits, deferred compensation, real-property gifts, and any other payout. The Grantee must also inform the Department of any changes in total executive compensation between the annual

reports. All compensation reports must indicate what percent of compensation comes directly from the State or Federal allocations to the Grantee.

38. Execution in Counterparts and Authority to Sign.

This Agreement, any amendments, and/or change orders related to the Agreement, may be executed in counterparts, each of which shall be an original and all of which shall constitute the same instrument. In accordance with the Electronic Signature Act of 1996, electronic signatures, including facsimile transmissions, may be used and shall have the same force and effect as a written signature. Each person signing this Agreement warrants that he or she is duly authorized to do so and to bind the respective party to the Agreement.

STATE OF FLORIDA
DEPARTMENT OF ENVIRONMENTAL PROTECTION
Special Terms and Conditions
AGREEMENT NO. LPA0212

ATTACHMENT 2

These Special Terms and Conditions shall be read together with general terms outlined in the Standard Terms and Conditions, Attachment 1. Where in conflict, these more specific terms shall apply.

1. Scope of Work.
The Project funded under this Agreement is Polk Regional Water Cooperative Heartland Headwaters Protection and Sustainability (Project). The Project is defined in more detail in Attachment 3, Grant Work Plan.

2. Duration.
a. Reimbursement Period. The reimbursement period for this Agreement begins on July 1, 2019 and ends at the expiration of the Agreement.
b. Extensions. There are extensions available for this Project.
c. Service Periods. Additional service periods are not authorized under this Agreement.

3. Payment Provisions.
a. Compensation. This is a cost reimbursement Agreement. The Grantee shall be compensated under this Agreement as described in Attachment 3.
b. Invoicing. Invoicing will occur as indicated in Attachment 3.
c. Advance Pay. Advance Pay is not authorized under this Agreement.

4. Cost Eligible for Reimbursement or Matching Requirements.
Reimbursement for costs or availability for costs to meet matching requirements shall be limited to the following budget categories, as defined in the Reference Guide for State Expenditures, as indicated:

Reimbursement	Match	Category
☐	☐	Salaries/Wages
		Overhead/Indirect/General and Administrative Costs:
☐	☐	a. Fringe Benefits, N/A.
☐	☐	b. Indirect Costs, N/A.
☒	☐	Contractual (Subcontractors)
☐	☐	Travel, in accordance with Section 112, F.S.
☐	☐	Equipment
☐	☐	Rental/Lease of Equipment
☐	☐	Miscellaneous/Other Expenses
☒	☐	Land Acquisition

5. Equipment Purchase.
No Equipment Purchases shall be funded under this Agreement.

6. Land Acquisition.
The Grantee is authorized to purchase the land described in Attachment 3, Grant Work Plan. All land acquired under this Agreement shall be used in perpetuity for the purposes described herein. The following language shall be included on the deed to the property purchased under this Agreement:
"By acceptance of this deed, Grantee hereby agrees that the use of the property described herein (the "Property") shall be subject to the terms and conditions of the Grant Award Agreement (DEP Agreement No. LPA0212), summarized in the Memorandum of Grant, which is attached hereto as Exhibit F and by reference made a part hereof (hereinafter referred to as the "Restrictive Covenants"). These Restrictive Covenants shall run with the title to the Property in perpetuity and be binding upon Grantee and all successive owners (and all parties claiming by,

through and under the owners) of the Property. The Florida Department of Environmental Protection ("DEP") shall be deemed a third-party beneficiary of these Restrictive Covenants in a court of competent jurisdiction. DEP shall have the authority to enforce these Restrictive Covenants in any judicial proceeding seeking any remedy recognizable at law or in equity, including an action or lawsuit seeking damages, injunction, specific performance, or any other form of relief, against any person, firm or entity violating or attempting to violate any of these Restrictive Covenants. The failure by DEP to enforce any covenant or restriction contained herein shall in no event be deemed a waiver of such covenant or restriction or of the right of DEP to thereafter enforce such covenant or restriction. The invalidation of any one of the provisions of these Restrictive Covenants by a court of competent jurisdiction shall in no way affect any of the other provisions of these Restrictive Covenants, which shall remain in full force and effect. Venue for enforcement actions regarding these Restrictive Covenants shall be in the Circuit Court of Polk County, Florida. Grantee agrees to incorporate these Restrictive Covenants in any subsequent deed or other written legal instrument by which Grantee transfers or conveys fee simple title or any other lesser estate in the Property or any part thereof to a third party either verbatim or by making an express reference to these Restrictive Covenants and specifically identifying the official records book and page at which this deed is recorded in the public records of Polk County, Florida. Grantee further agrees to give written notice to DEP of the conveyance or transfer of any interest in the Property at least 20 calendar days prior to the date of such conveyance or transfer."
"Requests for release of the Restrictive Covenants from the Property shall be directed to the Florida Department of Environmental Protection, Office of General Counsel, Attention: Contracts Attorney, 3900 Commonwealth Boulevard, Tallahassee, Florida 32399-3000. The request should include the DEP Agreement No. LPA0212, the total funding amount paid by the State of Florida, the date of acquisition, and the Department's Grant Manager's name."
If for any reason the above-referenced federal and state deed language is not incorporated into the deed by which the Grantee acquired the Property, the Grantee shall execute and record a separate Declaration of Restrictive Covenant that incorporates the Memorandum of Grant as an Exhibit, and that shall run with the title to the Property. The Grantee shall provide a copy of the recorded Declaration of Restrictive Covenant to the Department as evidence of compliance with this provision. Any applicable recording fees are the sole responsibility of the Grantee.

7. Match Requirements

There is no match required on the part of the Grantee under this Agreement.

8. Insurance Requirements

Required Coverage. At all times during the Agreement the Grantee, at its sole expense, shall maintain insurance coverage of such types and with such terms and limits described below. The limits of coverage under each policy maintained by the Grantee shall not be interpreted as limiting the Grantee's liability and obligations under the Agreement. All insurance policies shall be through insurers licensed and authorized to issue policies in Florida, or alternatively, Grantee may provide coverage through a self-insurance program established and operating under the laws of Florida. Additional insurance requirements for this Agreement may be required elsewhere in this Agreement, however the minimum insurance requirements applicable to this Agreement are:

a. Commercial General Liability Insurance.
   The Grantee shall provide adequate commercial general liability insurance coverage and hold such liability insurance at all times during the Agreement. The Department, its employees, and officers shall be named as an additional insured on any general liability policies. The minimum limits shall be $250,000 for each occurrence and $500,000 policy aggregate.
b. Commercial Automobile Insurance.
   If the Grantee's duties include the use of a commercial vehicle, the Grantee shall maintain automobile liability, bodily injury, and property damage coverage. Insuring clauses for both bodily injury and property damage shall provide coverage on an occurrence basis. The Department, its employees, and officers shall be named as an additional insured on any automobile insurance policy. The minimum limits shall be as follows:

$200,000/300,000	Automobile Liability for Company-Owned Vehicles, if applicable
$200,000/300,000	Hired and Non-owned Automobile Liability Coverage

c. Workers' Compensation and Employer's Liability Coverage.
   The Grantee shall provide workers' compensation, in accordance with Chapter 440, F.S. if applicable.
d. Other Insurance.
   None.

9. Quality Assurance Requirements.
There are no special Quality Assurance requirements under this Agreement.

10. Retainage.
No retainage is required under this Agreement.

11. Subcontracting.
The Grantee may subcontract work under this Agreement without the prior written consent of the Department's Grant Manager except for certain fixed-price subcontracts pursuant to this Agreement, which require prior approval. The Grantee shall submit a copy of the executed subcontract to the Department prior to submitting any invoices for subcontracted work. Regardless of any subcontract, the Grantee is ultimately responsible for all work to be performed under this Agreement.

12. State-owned Land.
The work will not be performed on State-owned land.

13. Office of Policy and Budget Reporting.
The Grantee will identify the expected return on investment for this project and provide this information to the Governor's Office of Policy and Budget (OPB) within three months of execution of this Agreement. For each full calendar quarter thereafter, the Grantee will provide quarterly update reports directly to OPB, no later than 20 days after the end of each quarter, documenting the positive return on investment to the state that results from the Grantee's project and its use of funds provided under this Agreement. Quarterly reports will continue until the Grantee is instructed by OPB that no further reports are needed, or until the end of this Agreement, whichever occurs first. All reports shall be submitted electronically to OPB at env.roi@laspbs.state.fl.us, and a copy shall also be submitted to the Department at legislativeaffairs@floridaDEP.gov.

14. Additional Terms.
None.

ATTACHMENT 3
GRANT WORK PLAN

PROJECT TITLE: Polk Regional Water Cooperative Heartland Headwaters Protection and Sustainability

PROJECT LOCATION: The Project will be located within the service areas of the Polk Regional Water Cooperative (PRWC) (Grantee). The PRWC is made up of Polk County and 15 municipalities. The County seat is located in Bartow, Florida; with an approximate Lat/Long of 27.8940, -81.8512.

PROJECT BACKGROUND: In 2017, the Florida Legislature passed HB 573, better known as the Heartland Headwaters Protection and Sustainability Act (Chapter No. 2017-111, Laws of Florida). The Act statutorily recognizes the vital importance of those portions of the Green Swamp Area of Critical State Concern that lie within the jurisdictional bounds of Polk and Lake counties and designates Polk County's aquifers as the headwaters for six of Florida's major rivers: the Alafia, Hillsborough, Kissimmee, Ocklawaha, Peace, and Withlacoochee Rivers. Furthermore, it acknowledges the critical importance of Polk County's aquifers to the economic and ecological health of the surrounding regions. The Act declared that fostering partnerships between Regional Water Supply Authorities (RWSA) and local governments is in the state's interest.

For the purposes of fostering such partnerships, the Act requires that the PRWC prepare annual comprehensive reports listing projects that are needed to protect and restore the region's water resources, so that they may be considered for state funding. These funds were awarded to PRWC (Grantee); the following entities will work in conjunction with the Grantee on this project: Polk City, City of Eagle Lake, City of Winter Haven, City of Frostproof, Polk County.

Project No. 1 PRWC West Polk Wellfield Lower Floridan Aquifer Project

PROJECT BACKGROUND: In order to meet growing water demands, the PRWC determined that multiple projects would be required to meet future demands. The West Polk project, which would utilize the deep, lower Floridan, brackish aquifer as a source, would serve as one project which could help meet demands in western Polk County. Use of the lower Floridan as a water supply is thought to be protective of the region's sensitive natural resources.

PROJECT DESCRIPTION: The Grantee will complete a well testing program and designs for a reverse osmosis treatment facility and associated piping to serve numerous communities in western Polk County. This Project includes acquisition of land for the testing and the construction of the raw water wellfield.

The Grantee does not anticipate that the funding under this Agreement will result in a fully completed project, so this Agreement will cover a portion of the work.

Project No. 2 Eagle Lake Wastewater Pump Station Replacement Project

PROJECT BACKGROUND: Lake McLeod and Eagle Lake exist within the Peace Creek Watershed, in which there is a TMDL for fecal coliform. The City of Eagle Lake plans to replace two wastewater pumping stations to prevent failures which have the potential to overflow sewage into the lakes.

PROJECT DESCRIPTION: The Grantee will complete the construction plan revision, bid document revisions, bidding and contractor selection, and the construction of two wastewater pumping stations and installation of emergency generators to replace aging existing pumping stations, one located at a park near Eagle Lake and one located in a low elevation area adjacent to Lake McLeod.

Project No. 3 Winter Haven Septic to Sewer Program.

PROJECT BACKGROUND: Nearly half of the 50 lakes in Winter Haven are on the impaired list for water quality due in part to septic tank loading. The City of Winter Haven serves a population of approximately 74,675, which includes 14,070 residences that are on septic systems. This project will design, permit and construct the first remediation area from the priority list identified in the Septic to Sewer Master Plan completed in January 2021. The Septic to Sewer Master Plan prioritizes and will subsequently eliminate some of the septic tank discharges by converting septic tanks to central sewer in a very high recharge area. The City of Winter Haven has completed a Septic to Sewer Master Plan in January 2021 which recommends priority areas for the conversion to sewer.

PROJECT DESCRIPTION: The Grantee will complete the design, permitting, and bidding services for a new public collection system, as well as on-site private septic system evaluations, connections to the new collection system, and septic tank decommisioning for approximately 125 residential and commercial accounts around East Lake Hartridge and US 17. They will also complete the construction of the collection system within the right-of-way in Remediation Area 6A and Boggy Bottom Area.

The Grantee does not anticipate that the funding under this Agreement will result in a fully completed project, so this Agreement will cover a portion of the work.

Project No. 4 Frostproof Wastewater System Upgrades.

PROJECT BACKGROUND: The City of Frostproof has prepared 90% design plans and technical specifications for the planned construction of a pretreatment/headworks system at its wastewater treatment plant. The City is also in the process of designing the expansion of its rapid infiltration basin (RIB) system for effluent disposal.

PROJECT DESCRIPTION: The Grantee will complete the design and construction of all components for the headworks, including the control panel, screen, compactor, grit system, stairs/walkway sensor, delivery, startup, training, permitting, and construction administration, as well as the design and construction of a rapud infiltration basin expansion and emergency generators for the lift station.

The Grantee does not anticipate that the funding under this Agreement will result in a fully completed project, so this Agreement will cover a portion of the work.

Project No. 5 Winter Haven ASR Wellfield

PROJECT BACKGROUND: The Winter Haven area is the headwaters for the Peace River which flows to Charlotte Harbor. This project is part of a larger One Water Master Plan to create green infrastructure projects, which provide water supply, water quality, flooding and natural system restoration. This project involves the design and construction of an aquifer storage and recovery (ASR) wellfield which would take excess surface water flow during flood events, store it in the lower Floridan aquifer, and then recover the water during drought events.

PROJECT DESCRIPTION: The Grantee will complete the design and construction of a roughly 1.5 MGD ASR well system to store excess water from the Peace Creek System for beneficial use, including a report on the Flow and Water Quality Data Summary and Analysis of available water sources and quantities and characterize water quality to determine treatment requirements, local hydrogeology, area features, and regulatory reviews, and well options screening evaluations.

The Grantee does not anticipate that the funding under this Agreement will result in a fully completed project, so this Agreement will cover a portion of the work.

Project No. 6 Polk County AWS Receiving Facilities

PROJECT BACKGROUND: Polk County is a member of the PRWC and will receive regional alternative water supplies from the PRWC via the Southeast Wellfield Project. Polk County must design and construct a receiving station to facilitate the re-pumping to an AWS system in its Northeast Regional Utility Service Area (NERUSA)

PROJECT DESCRIPTION: The Grantee will complete the design of an alternative water supply storage and repump facility. The station will include an approximately 1 MGD storage tank, pumps, chemical feed, electrical equipment, generator, and associated equipment. This project includes land acquisition, designs, and permitting for the new facility.

The Grantee does not anticipate that the funding under this Agreement will result in a fully completed project, so this Agreement will cover a portion of the work.

TASKS:

All documentation will be submitted electronically unless otherwise indicated.

Task 1: Land Acquisition

Deliverables: The Grantee will acquire fee simple or less-than-fee simple interest on properties within the service areas of the PRWC. Costs related to pre-acquisition and acquisition will be reimbursable. the property interests will be held by Polk County, to be transferred by the Grantee after the acquisition is complete. The Grantee will complete the following:

- Project 1: Property acquisition of the raw water wells and pipeline for a 2.5 MGD facility.
- Project 6: Land acquisition for an alternative water supply storage and repump facility.

Documentation: The Grantee will submit: 1) copies of all appraisals; 2) the closing statement or all closing documents; 3) title exam/insurance; 4) property survey; 5) boundary map; and 6) the deed, recorded easement, or property interest.

Performance Standard: The Department's Grant Manager will review the documentation to verify that the deliverables have been completed as described above. Upon review and written acceptance by the Department's Grant Manager, the Grantee may proceed with payment request submittal.

Payment Request Schedule: The Grantee may submit a payment request for cost reimbursement at the conclusion of the task.

Task 2: Pre-construction Activities

Deliverables: The Grantee will complete the following:

- Project 2: Design of the Eagle Lake wastewater pumping station and FDEP permit renewal.
- Project 3: Design of the Winter Haven Area 6A and Boggy Bottom Area public collection system.
- Project 4: Design of an expansion of Frostproof's rapid infiltration basin (RIB) system for effluent disposal.
- Project 5: Evaluation of the flow and water quality characteristics for the Winter Haven ASR wellfield.

- Project 6: Preliminary design report and design of the Polk County AWS receiving facilities.

Documentation: The Grantee will submit:1) a signed acceptance of the completed work to date, as provided in the Grantee's Certification of Payment Request; and 2) a summary of design (or preconstruction) activities to date, indicating the percentage of design completion for the time period covered in the payment request. For the final documentation, the Grantee will also submit a copy of the design completed with the funding provided for this task and a list of all required permits identifying issue dates and issuing authorities. The Grantee will also submit the following:

- Project 2: Construction plans and renewed permit for the Eagle Lake wastewater pumping station.
- Project 3: Construction plans for the 6A and Boggy Bottom Area public collection system.
- Project 4: Construction plans for a pretreatment/headworks system.
- Project 5: Draft and final summary memoranda of the flow and water quality characteristics, local hydrogeology, and well options; Class V well construction permit application.
- Project 6: Preliminary design report, 60% design documents, 90% design documents for the Polk County AWS receiving facilities.

Performance Standard: The Department's Grant Manager will review the documentation to verify that the deliverables have been completed as described above. Upon review and written acceptance by the Department's Grant Manager, the Grantee may proceed with payment request submittal.

Payment Request Schedule: The Grantee may submit a payment request for cost reimbursement following the conclusion of the task.

Task 3: Bidding and Contractor Selection

Deliverables: The Grantee will complete the following:

- Project 2: Bidding documents for the Eagle Lake wastewater pump station.
- Project 4: City of Frostproof bidding documents for the headworks and RIB improvements.
- Project 6: Polk County AWS receiving facility bid documents.

Documentation: The Grantee will submit: 1) the public notice of advertisement for the bid; 2) the bid package; and 3) a written notice of selected contractor(s).

Performance Standard: The Department's Grant Manager will review the documentation to verify that the deliverables have been completed as described above. Upon review and written acceptance by the Department's Grant Manager, the Grantee may proceed with payment request submittal.

Payment Request Schedule: The Grantee may submit a payment request for cost reimbursement no more frequently than monthly.

Task 4: Construction

Deliverables: The Grantee will construct the following items in accordance with the construction contract documents.

- Project 2: City of Eagle Lake wastewater pumping station.
- Project 3: City of Winter Haven sewer collection system.
- Project 4: City of Frostproof headworks and RIB improvements.
- Project 5: City of Winter Haven ASR well construction.

Documentation: The Grantee will submit a signed acceptance of the completed work to date by the Grantee and the Engineer's Certification of Payment Request.

Performance Standard: The Department's Grant Manager will review the documentation to verify that the deliverables are completed as described above. Upon review and written acceptance by the Department's Grant Manager, the Grantee may proceed with payment request submittal.

PROJECT TIMELINE & BUDGET DETAIL: The tasks must be completed by, and all documentation received by, the corresponding task end date.

Task No.	Task Title	Budget Category	Budget Amount	Task Start Date	Task End Date
1	Land Acquisition	Land Acquisition	$1,477,557	07/01/2021	6/30/2023
			$122,052*	07/01/2019	6/30/2023
2	Pre-construction Activities	Contractual Services	$730,268	07/01/2021	6/30/2023
3	Bidding and Contractor Selection	Contractual Services	$400,000	07/01/2021	6/30/2023
4	Construction	Contractual Services	$4,392,175	07/01/2021	6/30/2023
		Total:	$7,122,052		

*$122,052 of funding provided under Line Item 1657A of the FY19-20 General Appropriations Act will go toward Land Acquisition for Project 1

STATE OF FLORIDA
DEPARTMENT OF ENVIRONMENTAL PROTECTION
Public Records Requirements

Attachment 4

1. **Public Records.**

a. If the Agreement exceeds $35,000.00, and if Grantee is acting on behalf of Department in its performance of services under the Agreement, Grantee must allow public access to all documents, papers, letters, or other material, regardless of the physical form, characteristics, or means of transmission, made or received by Grantee in conjunction with the Agreement (Public Records), unless the Public Records are exempt from section 24(a) of Article I of the Florida Constitution or section 119.07(1), F.S.

b. The Department may unilaterally terminate the Agreement if Grantee refuses to allow public access to Public Records as required by law.

2. **Additional Public Records Duties of Section 119.0701, F.S., If Applicable.**
For the purposes of this paragraph, the term "contract" means the "Agreement." If Grantee is a "contractor" as defined in section 119.0701(1)(a), F.S., the following provisions apply and the contractor shall:

a. Keep and maintain Public Records required by Department to perform the service.

b. Upon request, provide Department with a copy of requested Public Records or allow the Public Records to be inspected or copied within a reasonable time at a cost that does not exceed the cost provided in Chapter 119, F.S., or as otherwise provided by law.

c. A contractor who fails to provide the Public Records to Department within a reasonable time may be subject to penalties under section 119.10, F.S.

d. Ensure that Public Records that are exempt or confidential and exempt from Public Records disclosure requirements are not disclosed except as authorized by law for the duration of the contract term and following completion of the contract if the contractor does not transfer the Public Records to Department.

e. Upon completion of the contract, transfer, at no cost, to Department all Public Records in possession of the contractor or keep and maintain Public Records required by Department to perform the service. If the contractor transfers all Public Records to Department upon completion of the contract, the contractor shall destroy any duplicate Public Records that are exempt or confidential and exempt from Public Records disclosure requirements. If the contractor keeps and maintains Public Records upon completion of the contract, the contractor shall meet all applicable requirements for retaining Public Records. All Public Records stored electronically must be provided to Department, upon request from Department's custodian of Public Records, in a format specified by Department as compatible with the information technology systems of Department. These formatting requirements are satisfied by using the data formats as authorized in the contract or Microsoft Word, Outlook, Adobe, or Excel, and any software formats the contractor is authorized to access.

f. **IF THE CONTRACTOR HAS QUESTIONS REGARDING THE APPLICATION OF CHAPTER 119, F.S., TO THE CONTRACTOR'S DUTY TO PROVIDE PUBLIC RECORDS RELATING TO THE CONTRACT, CONTACT THE DEPARTMENT'S CUSTODIAN OF PUBLIC RECORDS AT:**

Telephone: **(850) 245-2118**
Email: public.services@floridadep.gov
Mailing Address: **Department of Environmental Protection**
ATTN: Office of Ombudsman and Public Services
Public Records Request
3900 Commonwealth Boulevard, MS 49
Tallahassee, Florida 32399

STATE OF FLORIDA
DEPARTMENT OF ENVIRONMENTAL PROTECTION
Special Audit Requirements
(State and Federal Financial Assistance)

Attachment 5

The administration of resources awarded by the Department of Environmental Protection *(which may be referred to as the "Department", "DEP", "FDEP" or "Grantor", or other name in the agreement*) to the recipient *(which may be referred to as the "Recipient", "Grantee" or other name in the agreement)* may be subject to audits and/or monitoring by the Department of Environmental Protection, as described in this attachment.

MONITORING

In addition to reviews of audits conducted in accordance with 2 CFR Part 200, Subpart F-Audit Requirements, and Section 215.97, F.S., as revised (see "AUDITS" below), monitoring procedures may include, but not be limited to, on-site visits by DEP Department staff, limited scope audits as defined by 2 CFR 200.425, or other procedures. By entering into this Agreement, the recipient agrees to comply and cooperate with any monitoring procedures/processes deemed appropriate by the Department of Environmental Protection. In the event the Department of Environmental Protection determines that a limited scope audit of the recipient is appropriate, the recipient agrees to comply with any additional instructions provided by the Department to the recipient regarding such audit. The recipient further agrees to comply and cooperate with any inspections, reviews, investigations, or audits deemed necessary by the Chief Financial Officer (CFO) or Auditor General.

AUDITS

PART I: FEDERALLY FUNDED

This part is applicable if the recipient is a State or local government or a non-profit organization as defined in 2 CFR §200.330

1. A recipient that expends $750,000 or more in Federal awards in its fiscal year, must have a single or program-specific audit conducted in accordance with the provisions of 2 CFR Part 200, Subpart F. EXHIBIT 1 to this Attachment indicates Federal funds awarded through the Department of Environmental Protection by this Agreement. In determining the federal awards expended in its fiscal year, the recipient shall consider all sources of federal awards, including federal resources received from the Department of Environmental Protection. The determination of amounts of federal awards expended should be in accordance with the guidelines established in 2 CFR 200.502-503. An audit of the recipient conducted by the Auditor General in accordance with the provisions of 2 CFR Part 200.514 will meet the requirements of this part.

2. For the audit requirements addressed in Part I, paragraph 1, the recipient shall fulfill the requirements relative to auditee responsibilities as provided in 2 CFR 200.508-512.

3. A recipient that expends less than $750,000 in federal awards in its fiscal year is not required to have an audit conducted in accordance with the provisions of 2 CFR Part 200, Subpart F-Audit Requirements. If the recipient expends less than $750,000 in federal awards in its fiscal year and elects to have an audit conducted in accordance with the provisions of 2 CFR 200, Subpart F-Audit Requirements, the cost of the audit must be paid from non-federal resources (i.e., the cost of such an audit must be paid from recipient resources obtained from other federal entities.

4. The recipient may access information regarding the Catalog of Federal Domestic Assistance (CFDA) via the internet at **www.cfda.gov**

PART II: STATE FUNDED

This part is applicable if the recipient is a nonstate entity as defined by Section 215.97(2), Florida Statutes.

1. In the event that the recipient expends a total amount of state financial assistance equal to or in excess of $750,000 in any fiscal year of such recipient (for fiscal years ending June 30, 2017, and thereafter), the recipient must have a State single or project-specific audit for such fiscal year in accordance with Section 215.97, F.S.; Rule Chapter 69I-5, F.A.C., State Financial Assistance; and Chapters 10.550 (local governmental entities) or 10.650 (nonprofit and for-profit organizations), Rules of the Auditor General. EXHIBIT 1 to this form lists the state financial assistance awarded through the Department of Environmental Protection by this agreement. In determining the state financial assistance expended in its fiscal year, the recipient shall consider all sources of state financial assistance, including state financial assistance received from the Department of Environmental Protection, other state agencies, and other nonstate entities. State financial assistance does not include federal direct or pass-through awards and resources received by a nonstate entity for Federal program matching requirements.

2. In connection with the audit requirements addressed in Part II, paragraph 1; the recipient shall ensure that the audit complies with the requirements of Section 215.97(8), Florida Statutes. This includes submission of a financial reporting package as defined by Section 215.97(2), Florida Statutes, and Chapters 10.550 (local governmental entities) or 10.650 (nonprofit and for-profit organizations), Rules of the Auditor General.

3. If the recipient expends less than $750,000 in state financial assistance in its fiscal year (for fiscal year ending June 30, 2017, and thereafter), an audit conducted in accordance with the provisions of Section 215.97, Florida Statutes, is not required. In the event that the recipient expends less than $750,000 in state financial assistance in its fiscal year, and elects to have an audit conducted in accordance with the provisions of Section 215.97, Florida Statutes, the cost of the audit must be paid from the non-state entity's resources (i.e., the cost of such an audit must be paid from the recipient's resources obtained from other than State entities).

4. For information regarding the Florida Catalog of State Financial Assistance (CSFA), a recipient should access the Florida Single Audit Act website located at https://apps.fldfs.com/fsaa for assistance. In addition to the above websites, the following websites may be accessed for information: Legislature's Website at http://www.leg.state.fl.us/Welcome/index.cfm, State of Florida's website at http://www.myflorida.com/, Department of Financial Services' Website at http://www.fldfs.com/and the Auditor General's Website at http://www.myflorida.com/audgen/.

PART III: OTHER AUDIT REQUIREMENTS

(NOTE: This part would be used to specify any additional audit requirements imposed by the State awarding entity that are solely a matter of that State awarding entity's policy (i.e., the audit is not required by Federal or State laws and is not in conflict with other Federal or State audit requirements). Pursuant to Section 215.97(8), Florida Statutes, State agencies may conduct or arrange for audits of State financial assistance that are in addition to audits conducted in accordance with Section 215.97, Florida Statutes. In such an event, the State awarding agency must arrange for funding the full cost of such additional audits.)

PART IV: REPORT SUBMISSION

1. Copies of reporting packages for audits conducted in accordance with 2 CFR Part 200, Subpart F-Audit Requirements, and required by PART I of this form shall be submitted, when required by 2 CFR 200.512, by or on behalf of the recipient directly to the Federal Audit Clearinghouse (FAC) as provided in 2 CFR 200.36 and 200.512

   A. The Federal Audit Clearinghouse designated in 2 CFR §200.501(a) (the number of copies required by 2 CFR §200.501(a) should be submitted to the Federal Audit Clearinghouse), at the following address:

By Mail:

Federal Audit Clearinghouse
Bureau of the Census
1201 East 10th Street
Jeffersonville, IN 47132

Submissions of the Single Audit reporting package for fiscal periods ending on or after January 1, 2008, must be submitted using the Federal Clearinghouse's Internet Data Entry System which can be found at http://harvester.census.gov/facweb/

2. Copies of financial reporting packages required by PART II of this Attachment shall be submitted by or on behalf of the recipient directly to each of the following:

A. The Department of Environmental Protection at one of the following addresses:

By Mail:
Audit Director
Florida Department of Environmental Protection
Office of Inspector General, MS 40
3900 Commonwealth Boulevard
Tallahassee, Florida 32399-3000

Electronically:
FDEPSingleAudit@dep.state.fl.us

B. The Auditor General's Office at the following address:

Auditor General
Local Government Audits/342
Claude Pepper Building, Room 401
111 West Madison Street
Tallahassee, Florida 32399-1450

The Auditor General's website (http://flauditor.gov/) provides instructions for filing an electronic copy of a financial reporting package.

3. Copies of reports or management letters required by PART III of this Attachment shall be submitted by or on behalf of the recipient directly to the Department of Environmental Protection at one of the following addresses:

By Mail:
Audit Director
Florida Department of Environmental Protection
Office of Inspector General, MS 40
3900 Commonwealth Boulevard
Tallahassee, Florida 32399-3000

Electronically:
FDEPSingleAudit@dep.state.fl.us

4. Any reports, management letters, or other information required to be submitted to the Department of Environmental Protection pursuant to this Agreement shall be submitted timely in accordance with 2 CFR 200.512, section 215.97, F.S., and Chapters 10.550 (local governmental entities) or 10.650 (nonprofit and for-profit organizations), Rules of the Auditor General, as applicable.

5. Recipients, when submitting financial reporting packages to the Department of Environmental Protection for audits done in accordance with 2 CFR 200, Subpart F-Audit Requirements, or Chapters 10.550 (local governmental entities) and 10.650 (non and for-profit organizations), Rules of the Auditor General, should indicate the date and the reporting package was delivered to the recipient correspondence accompanying the reporting package.

PART V: RECORD RETENTION

The recipient shall retain sufficient records demonstrating its compliance with the terms of the award and this Agreement for a period of **five (5)** years from the date the audit report is issued, and shall allow the Department of Environmental Protection, or its designee, Chief Financial Officer, or Auditor General access to such records upon request. The recipient shall ensure that audit working papers are made available to the Department of Environmental Protection, or its designee, Chief Financial Officer, or Auditor General upon request for a period of **three (3)** years from the date the audit report is issued, unless extended in writing by the Department of Environmental Protection.

EXHIBIT – 1

FUNDS AWARDED TO THE RECIPIENT PURSUANT TO THIS AGREEMENT CONSIST OF THE FOLLOWING:

Note: If the resources awarded to the recipient represent more than one federal program, provide the same information shown below for each federal program and show total federal resources awarded

Federal Resources Awarded to the Recipient Pursuant to this Agreement Consist of the Following:					
Federal Program A	Federal Agency	CFDA Number	CFDA Title	Funding Amount	State Appropriation Category
				$	
Federal Program B	Federal Agency	CFDA Number	CFDA Title	Funding Amount	State Appropriation Category
				$	

Note: Of the resources awarded to the recipient represent more than one federal program, list applicable compliance requirements for each federal program in the same manner as shown below:

Federal Program A	First Compliance requirement: i.e.: (what services of purposes resources must be used for)	
	Second Compliance requirement: i.e.:(eligibility requirement for recipients of the resources)	
	Etc.	
	Etc.	
Federal Program B	First Compliance requirement: i.e.: (what services of purposes resources must be used for)	
	Second Compliance requirement: i.e.: (eligibility requirement for recipients of the resources)	
	Etc.	
	Etc.	

Note: If the resources awarded to the recipient for matching represent more than one federal program, provide the same information shown below for each federal program and show total state resources awarded for matching.

State Resources Awarded to the Recipient Pursuant to this Agreement Consist of the Following Matching Resources for Federal Programs:					
Federal Program A	Federal Agency	CFDA	CFDA Title	Funding Amount	State Appropriation Category
Federal Program B	Federal Agency	CFDA	CFDA Title	Funding Amount	State Appropriation Category

Note: If the resources awarded to the recipient represent more than one state project, provide the same information shown below for each state project and show total state financial assistance awarded that is subject to section 215.97, F.S.

State Resources Awarded to the Recipient Pursuant to this Agreement Consist of the Following Resources Subject to Section 215.97, F.S.:						
State Program A	State Awarding Agency	State Fiscal Year[1]	CSFA Number	CSFA Title or Funding Source Description	Funding Amount	State Appropriation Category
Original	FDEP	2021-2022	37.039	Statewide Surface Restoration and Wastewater Projects	$7,000,000	140047
Original	FDEP	2019-2020	37.039	Statewide Surface Restoration and Wastewater Projects	$122,052	140047
State Program B	State Awarding Agency	State Fiscal Year[2]	CSFA Number	CSFA Title or Funding Source Description	Funding Amount	State Appropriation Category

Total Award	$7,122,052	

Note: List applicable compliance requirement in the same manner as illustrated above for federal resources. For matching resources provided by the Department for DEP for federal programs, the requirements might be similar to the requirements for the applicable federal programs. Also, to the extent that different requirements pertain to different amount for the non-federal resources, there may be more than one grouping (i.e. 1, 2, 3, etc.) listed under this category.

For each program identified above, the recipient shall comply with the program requirements described in the Catalog of Federal Domestic Assistance (CFDA) [www.cfda.gov] and/or the Florida Catalog of State Financial Assistance (CSFA) [https://apps.fldfs.com/fsaa/searchCatalog.aspx], and State Projects Compliance Supplement (Part Four: State Projects Compliance Supplement [https://apps.fldfs.com/fsaa/state_project_compliance.aspx]. The services/purposes for which the funds are to be used are included in the Agreement's Grant Work Plan. Any match required by the Recipient is clearly indicated in the Agreement.

[1] Subject to change by Change Order.
[2] Subject to change by Change Order.

STATE OF FLORIDA
DEPARTMENT OF ENVIRONMENTAL PROTECTION

Exhibit A
Progress Report Form

DEP Agreement No.:	LPA0212
Project Title:	Polk Regional Water Cooperative Heartland Headwaters Protection and Sustainability
Grantee Name:	Polk Regional Water Cooperative
Grantee's Grant Manager:	Charles Richards
Reporting Period:	Select reporting period. Select year.

Provide the following information for all tasks identified in the Grant Work Plan:
Summarize the work completed within each task for the reporting period. Provide an update on the estimated completion date for each task and an explanation for any anticipated delays or problems encountered. Add or remove task sections and use as many pages as necessary to cover all tasks. Use the format provided below.

Task 1: Preconstruction Activities (Land Acquisition)

- **Progress for this reporting period:** Add Text
- **Identify delays or problems encountered:** Add Text

Task 2: Preconstruction Activities

- **Progress for this reporting period:** Add Text
- **Identify delays or problems encountered:** Add Text

Task 3: Bidding and Contractor Selection

- **Progress for this reporting period:** Add Text
- **Identify delays or problems encountered:** Add Text

Task 4: Construction

- **Progress for this reporting period:** Add Text
- **Identify delays or problems encountered:** Add Text

Indicate the completion status for the following tasks (if included in the Grant Work Plan):

Design (Plans/Submittal): 30% ☐, 60% ☐, 90% ☐, 100% ☐

Permitting (Completed): Yes ☐, No ☐

Construction (Estimated): _____%

This report is submitted in accordance with the reporting requirements of the above DEP Agreement number and accurately reflects the activities associated with the project.

_____ _____

Signature of Grantee's Grant Manager (Original Ink) Date

STATE OF FLORIDA
DEPARTMENT OF ENVIRONMENTAL PROTECTION

Exhibit C
Payment Request Summary Form

The **Payment Request Summary Form** for this grant can be found on our website at this link:

https://floridadep.gov/wra/wra/documents/payment-request-summary-form

Please use the most current form found on the website, linked above, for each payment request.

AMENDMENT TO AGREEMENT BETWEEN
POLK REGIONAL WATER COOPERATIVE
AND
CITY OF WINTER HAVEN
POLK REGIONAL WATER COOPERATIVE
HEARTLAND PROTECTION AND SUSTAINABILITY PROJECT

This AMENDMENT TO AGREEMENT (Amendment) effective upon execution by both parties, by and between the POLK REGIONAL WATER COOPERATIVE, a public entity established by Interlocal Agreement, having an address of 330 West Church Street, Bartow, Florida 33831, hereinafter referred to as the "PRWC", and the City of Winter Haven, a municipal corporation organized and existing under the laws of the State of Florida, having an address of 451 Third Street, N.W., Winter Haven, Florida 33881, hereinafter referred to as the "Member." The PRWC and the Member are also referred to herein individually as a "Party" and collectively as the "Parties."

WITNESSETH:

WHEREAS, in 2017, the Florida Legislature passed HB 573, better known as the Heartland Headwaters Protection and Sustainability Act (Chapter No. 2017-111, Laws of Florida) (the Act), which statutorily recognizes the vital importance of those portions of the Green Swamp Area of Critical State Concern that lie within the jurisdictional bounds of Polk and Lake counties and designates Polk County's aquifers as the headwaters for six of Florida's major rivers: the Alafia, Hillsborough, Kissimmee, Ocklawaha, Peace, and Withlacoochee Rivers. Furthermore, it acknowledges the critical importance of Polk County's aquifers to the economic and ecological health of the surrounding regions. The Act declared that fostering partnerships between Regional Water Supply Authorities (RWSA) and local governments is in the state's interest;

WHEREAS, for the purposes of fostering such partnerships, the Act requires that the PRWC prepare annual comprehensive reports listing projects that are needed to protect and restore the region's water resources, so that they may be considered for state funding. These funds are awarded to PRWC by the Florida Department of Environmental Protection (FDEP);

WHEREAS, on July 28, 2022, FDEP and PRWC entered into grant agreement number LPA0212 (Grant Agreement), a copy of which attached hereto as **Exhibit A,** for PRWC to receive funding as Grantee for the Polk Regional Water Cooperative Heartland Headwaters Protection and Sustainability Project;

WHEREAS, the Grant Agreement identified the Winter Haven Septic to Sewer Program and the ASR Wellfield Construction at the City's WWTP #3 Project as two components of the Polk Regional Water Cooperative Heartland Headwaters

Protection and Sustainability Project (Project(s));

WHEREAS, the Member is a member government of PRWC, and the Grant Agreement provides that PRWC and Member shall work in conjunction with PRWC in implementing the Projects; and

WHEREAS, on September 21, 2022, Member and PRWC entered into an agreement titled Agreement Between Polk Regional Water Cooperative and Winter Haven Polk Regional Water Cooperative Heartland Protection and Sustainability Project (Member Agreement), a copy of which attached hereto as **Exhibit B**, to provide for utilization of funds allocated in the Grant Agreement for the Projects by the Member, and for the Member to be bound by the requirements of the Grant Agreement as those requirements pertain to Member's activities with regard to the Projects; and

WHEREAS, on March 24, 2023, FDEP and PRWC entered into Amendment No. 1 to the Grant Agreement (Amendment No. 1), a copy of which is attached hereto as **Exhibit C-1**, which made revisions to Grant Agreement, including modifying the budget and scope of work for the Polk Regional Water Cooperative Heartland Headwaters Protection and Sustainability Project as a result of additional funds being appropriated by the Florida Legislature under the 2022-2023 General Appropriations Act; and

WHEREAS, on September 29, 2023, FDEP and PRWC entered into Amendment No. 2 to the Grant Agreement (Amendment No. 2), a copy of which is attached hereto as **Exhibit C-2**, which made further revisions to the Grant Agreement, including modifying the budget and scope of work for the Polk Regional Water Cooperative Heartland Headwaters Protection and Sustainability Project as a result of additional funds being appropriated by the Florida Legislature under the 2023-2024 General Appropriations Act; and

WHEREAS, Section 4 of the Member Agreement provides that in the event the Grant Agreement is amended, the Parties shall coordinate in good faith to amend the Member Agreement to be consistent with the Grant Agreement; and

WHEREAS, Member and PRWC desire to amend the Member Agreement be consistent with and to account for the modifications reflected in Amendment No. 1 and Amendment No. 2 to the Grant Agreement;

NOW THEREFORE, in consideration of the mutual terms, covenants and conditions contained herein, the Parties hereby mutually agree as follows:

1. **RECITALS.** The foregoing recitals are true and correct and form a material part of this Agreement.

2. **PURPOSE.** This Amendment modifies the Member Agreement to

incorporate and implement the changes reflected in Amendment No. 1 and Amendment No. 2 to the Grant Agreement., but otherwise does not alter the existing terms of the Member Agreement.

3. **AMENDMENT TO THE MEMBER AGREEMENT**. The Parties agree that the Member Agreement is amended such that the term "Grant Agreement" utilized in the Member Agreement shall be defined as the original Grant Agreement, as amended by Amendment No. 1 and Amendment No. 2., and incorporate **Exhibit C-1 and Exhibit C-2** as exhibits to the Member Agreement. The terms of Member Agreement shall otherwise remain unchanged and in full effect.

IN WITNESS WHEREOF, the undersigned have caused this Amendment to be duly executed and entered into by the Parties.

CITY OF WINTER HAVEN, FLORIDA

By: Nathaniel J. Birdsong, Jr
Nathaniel J. Birdsong, Jr, Mayor

Date: 8/12/24

ATTEST:

By: Vanessa Castillo
Vanessa Castillo City Clerk

APPROVED AS TO FORM AND CORRECTNESS:

8-12-24
FREDERICK J. Murphy, Jr City Attorney

POLK REGIONAL WATER COOPERATIVE

By:
, Chairman

Date: 7-24-24

ATTEST:

By:_____
, Secretary

APPROVED AS TO FORM AND CORRECTNESS:

_____
Edward P. de la Parte, Legal Counsel

SCANNED

AGREEMENT BETWEEN
POLK REGIONAL WATER COOPERATIVE
AND
WINTER HAVEN
POLK REGIONAL WATER COOPERATIVE
HEARTLAND PROTECTION AND SUSTAINABILITY PROJECT

This AGREEMENT effective upon execution by both parties, by and between the POLK REGIONAL WATER COOPERATIVE, a public entity established by Interlocal Agreement, having an address of 330 West Church Street, Bartow, Florida 33831, hereinafter referred to as the "PRWC", and the City of Winter Haven, a municipal corporation organized and existing under the laws of the State of Florida, having an address of 451 Third Street, N.W., Winter Haven, Florida 33881, hereinafter referred to as the "Member" and/or "City" and/or "Winter Haven."

WITNESSETH:

WHEREAS, in 2017, the Florida Legislature passed HB 573, better known as the Heartland Headwaters Protection and Sustainability Act (Chapter No. 2017-111, Laws of Florida) (the Act), which statutorily recognizes the vital importance of those portions of the Green Swamp Area of Critical State Concern that lie within the jurisdictional bounds of Polk and Lake counties and designates Polk County's aquifers as the headwaters for six of Florida's major rivers: the Alafia, Hillsborough, Kissimmee, Ocklawaha, Peace, and Withlacoochee Rivers. Furthermore, it acknowledges the critical importance of Polk County's aquifers to the economic and ecological health of the surrounding regions. The Act declared that fostering partnerships between Regional Water Supply Authorities (RWSA) and local governments is in the state's interest;

WHEREAS, for the purposes of fostering such partnerships, the Act requires that the PRWC prepare annual comprehensive reports listing projects that are needed to protect and restore the region's water resources, so that they may be considered for state funding. These funds were awarded to PRWC by the Florida Department of Environmental Protection (FDEP);

WHEREAS, FDEP and PRWC have entered into grant agreement number LPA0212 (Grant Agreement), a copy of which is attached hereto as **Exhibit A**, for PRWC to receive funding as Grantee for the Polk Regional Water Cooperative Heartland Headwaters Protection and Sustainability Project;

WHEREAS the Grant Agreement identifies the Winter Haven Septic to Sewer Program and the ASR Wellfield Construction at the City's WWTP #3 Project as two components of the Polk Regional Water Cooperative Heartland Headwaters Protection and Sustainability Project, including Pre-Construction Activities, Bidding

and Contractor Selection, and Construction for Project No. 3 Winter Have Septic to Sewer Program and Project No. 5 Winter Haven ASR Wellfield Project (Project(s)) as described in Attachment 3 to the Grant Agreement;

WHEREAS, the estimated portion of funds allocated for the Projects under the Grant Agreement is $1,000,000 for Project No. 3 Septic to Sewer Program and $1,375,000 for Project No. 5 ASR Wellfield Project (Project Grant Funding Amount);

WHEREAS, the Member is a member government of PRWC, and the Grant Agreement provides that PRWC and Member shall work in conjunction with PRWC in implementing the Projects; and

WHEREAS, in order to facilitate the implementation of the Projects, PRWC and Member wish to enter into this Agreement to provide for utilization of funds allocated in the Grant Agreement for the Projects, and for the Member to be bound by the requirements of the Grant Agreement as those requirements pertain to Member's activities with regard to the Projects.

NOW THEREFORE, in consideration of the mutual terms, covenants and conditions contained herein, the Parties hereby mutually agree as follows:

1. **RECITALS**. The foregoing recitals are true and correct and form a material part of this Agreement.

2. **PURPOSE**. This Agreement defines the duties and obligations of the Parties with respect to implementation of the Grant Agreement.

3. **DUTIES AND OBLIGATIONS.**

3.1. The Parties agree to coordinate regarding implementation of the Projects in accordance with the requirements of the Grant Agreement.

3.2. The Parties agree that this Agreement does not obligate PRWC to provide funding or other material support to the Member or for the Projects beyond that provided for in the Grant Agreement.

3.3. Member acknowledges that the Grant Agreement and this Agreement do not entitle the Member to the disbursement of any funds pursuant to the Grant Agreement. Member acknowledges that the Grant Agreement provides an undivided grant of funding to PRWC for six identified projects under development by PRWC and/or its members, subject to the terms of the Grant Agreement. The Parties acknowledge that the Project Grant Funding Amount is an estimate of the funding allocation available for the Project, and that actual disbursement of funds will be equal to actual eligible project costs under the Grant Agreement, not to exceed the Project Grant Funding Amount, without prior authorization by PRWC.

3.4. Member agrees that it will be subject to all requirements, obligations,

and representations of the Grant Agreement to the same extent that those requirements are applicable to PRWC with regard to the Projects. These requirements include, but are not limited to, the rendering of services or other units of deliverables as set forth in Attachment 3 to the Grant Agreement (the Grant Work Plan), and performance of all terms and conditions set forth in the Grant Agreement, including all attachments and exhibits incorporated by the Grant Agreement, the preparation of required status reports regarding the Projects, the maintenance of insurance coverage, and record keeping and audit obligations of the Grant Agreement.

3.5. Member warrants that it shall comply with and be bound by the performance measures to which PRWC is subject to under the Grant Agreement with regard to the Projects, including but not limited to those specified in paragraph 5. of the Grant Agreement.

3.6. Member agrees to work diligently to correct all deficiencies, if any, in deliverables as required under the Grant Agreement with regard to the Projects, within a reasonable time and at Member's reasonable expense.

3.7. The Parties agree to the following procedure for seeking and obtaining reimbursement for costs associated with the Projects pursuant to the Grant Agreement:

a. For any costs associated with the Projects for which Member wishes to seek reimbursement of funds pursuant to and in accordance with the Grant Agreement, Member shall submit in writing to PRWC all documentation and any other information necessary for the funds to be disbursed to PRWC in accordance with the requirements of the Grant Agreement.

b. As grantee under the Grant Agreement PRWC shall review the documentation and information provided by the Member, and if determined to be consistent with the requirements of the Grant Agreement, shall timely submit such information to FDEP consistent with the requirements of the Grant Agreement.

c. In the event additional deliverable information or documentation is required by FDEP in accordance with the Grant Agreement, PRWC shall coordinate with Member, however it shall be the Member's sole responsibility to address any additional deliverable information or documentation requirement specified by FDEP in the event the deliverable is rejected.

d. Upon approval of a deliverable and payment by FDEP to PRWC for the Projects pursuant to the Grant Agreement, PRWC shall in turn transfer the provided grant funding to the Member within thirty (30) calendar days of receipt by the PRWC.

e. In the event refund of payments is required pursuant to the Grant Agreement, Member shall transfer such refund amounts to PRWC, who shall then in turn transfer such refund amount to FDEP within a reasonable period of time.

4. **MODIFICATION.** This Agreement may be modified or amended only if the Parties agree in writing. All modifications or amendments must be in writing signed by all the Parties. In the event the Grant Agreement is amended, the Parties shall coordinate in good faith to amend this Agreement to be consistent with the amendment to the Grant Agreement.

5. **TERM.** The term of this Agreement shall commence on the Effective Date and unless terminated sooner will continue through the term of the Grant Agreement. The Effective Date of this Agreement is the date the last Party executes the Agreement. Immediately upon executing the Agreement, a Party shall notify the other Parties of this fact.

6. **NOTICES**. All notices provided for in this Agreement must be in writing and shall be sufficient and deemed to be given when sent by certified mail or registered mail, return receipt requested. A copy shall also be sent to the Party by email. All notices shall be delivered or sent to the Parties at their respective addresses shown below or such other addresses as a Party may designate by prior notice given in accordance with this provision to the other Parties:

For the PRWC:

Eric DeHaven
PRWC Executive Director
330 W. Church Street
PO Box 9005, Drawer CA-01
Bartow, FL 33831-9005

For Winter Haven:

Mike Herr
City Manager
City of Winter Haven
451 Third Street, N.W.
Winter Haven, FL 33881

Gary Hubbard, P.E.
Director of Winter Haven Water
401 Sixth Street, S.W.
Winter Haven, FL 33880

With a copy to (*which*

shall not constitute notice):

Frederick J. Murphy, Jr., Esquire
City Attorney
Boswell & Dunlap LLP
245 South Central Avenue
Bartow, FL 33830

7. **LIMITATION OF LIABILITY.** In no event shall any Party be liable to the other Party or to anyone claiming for, by, or through a Party, to include, but not limited, to a participant or contractor, for indirect, incidental, consequential, special, exemplary, or punitive damages of any kind or nature whatsoever, including loss of profit, whether foreseeable or not, arising out of or resulting from nonperformance or breach of this Agreement by a Party whether based in contract, common law, warranty, tort, strict liability, contribution, indemnity or otherwise.

8. **ATTORNEY'S FEES AND COSTS**. Each Party shall be responsible for its own legal and attorney's fees, costs and expenses incurred in connection with any dispute or any litigation arising out of, or relating to this Agreement, including attorney's fees, costs, and expenses incurred for any appellate or bankruptcy proceedings.

9. **GOVERNING LAW; VENUE**. The interpretation and performance of this Agreement shall be governed by the laws of the State of Florida; venue for any such litigation with respect to the Agreement shall be in Polk County, Florida.

10. **WAIVER**. No failure by a Party to exercise any right, power or privilege under this Agreement is a waiver of that or any other right, power or privilege under this Agreement, except as otherwise expressly set forth in the Agreement.

11. **SEVERABILITY**. If any provision of this Agreement is found by a court of competent jurisdiction to be invalid, it shall be considered deleted, and shall not invalidate the remaining provisions. However, if the deleted language is considered a key provision of the Agreement, the Parties must agree to a substitute provision that will accomplish the original intent of the Parties. If the Parties cannot agree to a substitute provision within ninety (90) business days of the determination by the court, then the Agreement shall be deemed terminated.

12. **INDEMNIFICATION.** Member shall be fully liable for the actions of its agents, employees, partners, or subcontractors acting within the course and scope of their employment or agency and shall fully indemnify, defend, and hold harmless PRWC and its officers, agents, and employees, from suits, actions, damages, and costs of every name and description arising from or relating to:

i. personal injury and damage to real or personal tangible property alleged to be

caused in whole or in part by Member, its agents, employees, partners, or subcontractors acting within the course and scope of their employment or agency; provided, however, that Member shall not be responsible to indemnify for that portion of any loss or damages proximately caused by the negligent act or omission of PRWC, it officers, agents, and employees;

ii. the Member's breach of this Agreement or the negligent acts or omissions of Member.

Each Party hereto agrees that it shall be solely responsible for the negligent or wrongful acts of its employees and agents acting within the course and scope of their employment and/or agency. However, nothing contained herein shall constitute a waiver by either Party of its sovereign immunity or the provisions of Section 768.28, Florida Statutes including but not limited to the Member's limits of liability as set forth in §768.28 of the Florida Statutes regardless of whether any such obligations are based in tort, contract, statute, strict liability, and negligence, product liability or otherwise. Further, nothing herein shall be construed as consent to be sued by third parties in any matter arising out of any contract or this Agreement.

13. **AMBIGUITY**. The Parties agree that each has played an equal part in negotiation and drafting of this Agreement, and in the event ambiguity should be asserted or realized in the interpretation or construction of this Agreement, the result of such ambiguity shall be equally assumed and realized by each Party.

14. **PUBLIC RECORDS**. Should any Party assert any exemption to, or inapplicability of, the requirements of Chapter 119 and related statutes, the burden and cost of establishing such an assertion, by way of injunctive or other relief as provided by law, shall be upon that Party. The Parties shall allow public access to all Project documents and materials that are subject to the requirements of Chapter 119, Florida Statutes or claim that a document does not constitute a public record, the burden of establishing such an exemption or excluding a document as a public record, by way of injunctive or other relief as provided by law, shall be upon the Party asserting the exemption or the claim that a document does not constitute a public record. Additionally, nothing in this Agreement shall be construed nor is intended to, expand the scope of Chapter 119, Florida Statutes or make into a public record a document that is not a public record under the applicable law or waive any exemptions and/or confidentiality provisions under Florida law applicable to any public records.

15. **INTERLOCAL AGREEMENT; FILING**. This is an interlocal agreement entered into by the parties pursuant to Section 163.01, Florida Statutes, the Florida Interlocal Cooperation Act of 1969. This Agreement and any amendment thereto shall be recorded in the public records of Polk County, Florida.

IN WITNESS WHEREOF, the undersigned have caused this Agreement to be duly executed and entered into by the Parties.

CITY OF WINTER HAVEN, FLORIDA

By: _____

Bradley T. Dantzler, Mayor

Date: 9/13/22

ATTEST:

By: Vanessa Castillo

Vanessa Castillo, MMC City Clerk

APPROVED AS TO FORM AND CORRECTNESS:

_____

Frederick J. Murphy, Jr., City Attorney

POLK REGIONAL WATER COOPERATIVE

By: _____

, Chairman

Date: _____

ATTEST:

By: _____

, Secretary

APPROVED AS TO FORM AND CORRECTNESS:

_____

Edward P. de la Parte, Legal Counsel

IN WITNESS WHEREOF, the undersigned have caused this Agreement to be duly executed and entered into by the Parties.

CITY OF WINTER HAVEN, FLORIDA

By: _____

Bradley T. Dantzler, Mayor

Date: _____

ATTEST:

By:_____
Vanessa Castillo, MMC City Clerk

APPROVED AS TO FORM AND CORRECTNESS:

_____
Frederick J. Murphy, Jr., City Attorney

POLK REGIONAL WATER COOPERATIVE

By:_____
, Chairman

Date: 9/21/2022

ATTEST:

By:_____
, Secretary

APPROVED AS TO FORM AND CORRECTNESS:

_____
Edward P. de la Parte, Legal Counsel

STATE OF FLORIDA
DEPARTMENT OF ENVIRONMENTAL PROTECTION
Standard Grant Agreement

This Agreement is entered into between the Parties named below, pursuant to Section 215.971, Florida Statutes:

1. Project Title (Project): **Polk Regional Water Cooperative Heartland Headwaters Protection and Sustainability**
   Agreement Number: **LPA0212**

2. Parties: **State of Florida Department of Environmental Protection, 3900 Commonwealth Boulevard, Tallahassee, Florida 32399-3000** (Department)
   Grantee Name: **Polk Regional Water Cooperative**
   Entity Type: **Local Government**
   Grantee Address: **300 W. Church Street, Bartow, FL 33831-9005**
   FEID: **81-3584103** (Grantee)

3. Agreement Begin Date: **Upon Execution**
   Date of Expiration: **December 31, 2023**

4. Project Number: *(If different from Agreement Number)*
   Project Location(s): **Lat/Long (28.0439, -81.957)**
   Project Description: **The Grantee (PRWC) will complete several projects that are a part of the Heartland Headwaters Protection and Sustainability Act, and that are needed to protect and restore the region's water sources.**

5. Total Amount of Funding: **$7,000,000.00**

Funding Source?	Award #s or Line Item Appropriations:	Amount per Source(s):
☑ State ☐Federal	**LP, GAA Line Item 1607A, FY21-22, GR**	**$7,000,000.00**
☑ State ☐Federal	**LP, GAA Line Item 1657A, FY19-20, GR**	**$122,052.00**
☐ Grantee Match		
	Total Amount of Funding + Grantee Match, if any:	**$7,122,052.00**

6. Department's Grant Manager
   Name: **Gabby Vega-Molnar** or successor
   Address: **3900 Commonwealth Blvd. MS 3602 Tallahassee, FL 32399**
   Phone: **850-245-2914**
   Email: **gabriela.vegamolnar@floridadep.gov**

   Grantee's Grant Manager
   Name: **Charles Richards** or successor
   Address: **PO Box 9005 Drawer CA01 Bartow, FL 33831**
   Phone: **863-298-4135**
   Email: **charlesrichards@polk-county.net**

7. The Parties agree to comply with the terms and conditions of the following attachments and exhibits which are hereby incorporated by reference:

☑ Attachment 1: Standard Terms and Conditions Applicable to All Grants Agreements
☑ Attachment 2: Special Terms and Conditions
☑ Attachment 3: Grant Work Plan
☑ Attachment 4: Public Records Requirements
☑ Attachment 5: Special Audit Requirements
☐ Attachment 6: Program-Specific Requirements
☐ Attachment 7: Grant Award Terms (Federal) *Copy available at https://facts.fldfs.com, in accordance with §215.985, F.S.
☐ Attachment 8: Federal Regulations and Terms (Federal)
☐ Additional Attachments (if necessary):
☑ Exhibit A: Progress Report Form
☐ Exhibit B: Property Reporting Form
☑ Exhibit C: Payment Request Summary Form
☐ Exhibit D: Quality Assurance Requirements for Grants
☐ Exhibit E: Advance Payment Terms and Interest Earned Memo
☑ Additional Exhibits (if necessary): **Exhibit F: Memorandum of Grant**

8. The following information applies to Federal Grants only and is identified in accordance with 2 CFR 200.331(a)(1):

Federal Award Identification Number(s) (FAIN):	
Federal Award Date to Department:	
Total Federal Funds Obligated by this Agreement:	
Federal Awarding Agency:	
Award R&D?	☐ Yes ☐N/A

IN WITNESS WHEREOF, this Agreement shall be effective on the date indicated by the Agreement Begin Date above or the last date signed below, whichever is later.

Polk Regional Water Cooperative **GRANTEE**

Grantee Name

By _____

(Authorized Signature) Date Signed

Eric DeHaven, Executive Director

Print Name and Title of Person Signing

State of Florida Department of Environmental Protection **DEPARTMENT**

By _____

Secretary or Designee Date Signed

Angela Knecht, Director of Water Restoration Assistance

Print Name and Title of Person Signing

☑ Additional signatures attached on separate page.

DWRA Additional Signatures

Gabby Vega-Molnar, DEP Grant Manager

Sandra Waters, DEP QC Reviewer

STATE OF FLORIDA
DEPARTMENT OF ENVIRONMENTAL PROTECTION
STANDARD TERMS AND CONDITIONS
APPLICABLE TO GRANT AGREEMENTS

ATTACHMENT 1

1. Entire Agreement.

This Grant Agreement, including any Attachments and Exhibits referred to herein and/or attached hereto (Agreement), constitutes the entire agreement between the parties with respect to the subject matter hereof and supersedes all prior agreements, whether written or oral, with respect to such subject matter. Any terms and conditions included on Grantee's forms or invoices shall be null and void.

2. Grant Administration.

a. Order of Precedence. If there are conflicting provisions among the documents that make up the Agreement, the order of precedence for interpretation of the Agreement is as follows:
   i. Standard Grant Agreement
   ii. Attachments other than Attachment 1, in numerical order as designated in the Standard Grant Agreement
   iii. Attachment 1, Standard Terms and Conditions
   iv. The Exhibits in the order designated in the Standard Grant Agreement

b. All approvals, written or verbal, and other written communication among the parties, including all notices, shall be obtained by or sent to the parties' Grant Managers. All written communication shall be by electronic mail, U.S. Mail, a courier delivery service, or delivered in person. Notices shall be considered delivered when reflected by an electronic mail read receipt, a courier service delivery receipt, other mail service delivery receipt, or when receipt is acknowledged by recipient. If the notice is delivered in multiple ways, the notice will be considered delivered at the earliest delivery time.

c. If a different Grant Manager is designated by either party after execution of this Agreement, notice of the name and contact information of the new Grant Manager will be submitted in writing to the other party and maintained in the respective parties' records. A change of Grant Manager does not require a formal amendment or change order to the Agreement.

d. This Agreement may be amended, through a formal amendment or a change order, only by a written agreement between both parties. A formal amendment to this Agreement is required for changes which cause any of the following:
   (1) an increase or decrease in the Agreement funding amount;
   (2) a change in Grantee's match requirements;
   (3) a change in the expiration date of the Agreement; and/or
   (4) changes to the cumulative amount of funding transfers between approved budget categories, as defined in Attachment 3, Grant Work Plan, that exceeds or is expected to exceed twenty percent (20%) of the total budget as last approved by Department.
   A change order to this Agreement may be used when:
   (1) task timelines within the current authorized Agreement period change;
   (2) the cumulative transfer of funds between approved budget categories, as defined in Attachment 3, Grant Work Plan, are less than twenty percent (20%) of the total budget as last approved by Department;
   (3) changing the current funding source as stated in the Standard Grant Agreement; and/or
   (4) fund transfers between budget categories for the purposes of meeting match requirements.
   This Agreement may be amended to provide for additional services if additional funding is made available by the Legislature.

e. All days in this Agreement are calendar days unless otherwise specified.

3. Agreement Duration.

The term of the Agreement shall begin and end on the dates indicated in the Standard Grant Agreement, unless extended or terminated earlier in accordance with the applicable terms and conditions. The Grantee shall be eligible for reimbursement for work performed on or after the date of execution through the expiration date of this Agreement, unless otherwise specified in Attachment 2, Special Terms and Conditions. However, work performed prior to the execution of this Agreement may be reimbursable or used for match purposes if permitted by the Special Terms and Conditions.

4. Deliverables.

The Grantee agrees to render the services or other units of deliverables as set forth in Attachment 3, Grant Work Plan. The services or other units of deliverables shall be delivered in accordance with the schedule and at the pricing outlined in the Grant Work Plan. Deliverables may be comprised of activities that must be completed prior to Department making payment on that deliverable. The Grantee agrees to perform in accordance with the terms and conditions set forth in this Agreement and all attachments and exhibits incorporated by the Standard Grant Agreement.

5. Performance Measures.

The Grantee warrants that: (1) the services will be performed by qualified personnel; (2) the services will be of the kind and quality described in the Grant Work Plan; (3) the services will be performed in a professional and workmanlike manner in accordance with industry standards and practices; (4) the services shall not and do not knowingly infringe upon the intellectual property rights, or any other proprietary rights, of any third party; and (5) its employees, subcontractors, and/or subgrantees shall comply with any security and safety requirements and processes, if provided by Department, for work done at the Project Location(s). The Department reserves the right to investigate or inspect at any time to determine whether the services or qualifications offered by Grantee meet the Agreement requirements. Notwithstanding any provisions herein to the contrary, written acceptance of a particular deliverable does not foreclose Department's remedies in the event deficiencies in the deliverable cannot be readily measured at the time of delivery.

6. Acceptance of Deliverables.

a. Acceptance Process. All deliverables must be received and accepted in writing by Department's Grant Manager before payment. The Grantee shall work diligently to correct all deficiencies in the deliverable that remain outstanding, within a reasonable time at Grantee's expense. If Department's Grant Manager does not accept the deliverables within 30 days of receipt, they will be deemed rejected.

b. Rejection of Deliverables. The Department reserves the right to reject deliverables, as outlined in the Grant Work Plan, as incomplete, inadequate, or unacceptable due, in whole or in part, to Grantee's lack of satisfactory performance under the terms of this Agreement. The Grantee's efforts to correct the rejected deliverables will be at Grantee's sole expense. Failure to fulfill the applicable technical requirements or complete all tasks or activities in accordance with the Grant Work Plan will result in rejection of the deliverable and the associated invoice. Payment for the rejected deliverable will not be issued unless the rejected deliverable is made acceptable to Department in accordance with the Agreement requirements. The Department, at its option, may allow additional time within which Grantee may remedy the objections noted by Department. The Grantee's failure to make adequate or acceptable deliverables after a reasonable opportunity to do so shall constitute an event of default.

7. Financial Consequences for Nonperformance.

a. Withholding Payment. In addition to the specific consequences explained in the Grant Work Plan and/or Special Terms and Conditions, the State of Florida (State) reserves the right to withhold payment when the Grantee has failed to perform/comply with provisions of this Agreement. None of the financial consequences for nonperformance in this Agreement as more fully described in the Grant Work Plan shall be considered penalties.

b. Corrective Action Plan. If Grantee fails to correct all the deficiencies in a rejected deliverable within the specified timeframe, Department may, in its sole discretion, request that a proposed Corrective Action Plan (CAP) be submitted by Grantee to Department. The Department requests that Grantee specify the outstanding deficiencies in the CAP. All CAPs must be able to be implemented and performed in no more than sixty (60) calendar days.

    i. The Grantee shall submit a CAP within ten (10) days of the date of the written request from Department. The CAP shall be sent to the Department's Grant Manager for review and approval. Within ten (10) days of receipt of a CAP, Department shall notify Grantee in writing whether the CAP proposed has been accepted. If the CAP is not accepted, Grantee shall have ten (10) days from receipt of Department letter rejecting the proposal to submit a revised proposed CAP. Failure to obtain Department approval of a CAP as specified above may result in Department's termination of this Agreement for cause as authorized in this Agreement.

    ii. Upon Department's notice of acceptance of a proposed CAP, Grantee shall have ten (10) days to commence implementation of the accepted plan. Acceptance of the proposed CAP by Department does not relieve Grantee of any of its obligations under the Agreement. In the event the CAP fails to correct or eliminate performance deficiencies by Grantee, Department shall retain the right to require additional or further remedial steps, or to terminate this Agreement for failure to perform. No actions approved by Department or steps taken by Grantee shall preclude Department from subsequently asserting any deficiencies in performance. The Grantee shall continue to implement

the CAP until all deficiencies are corrected. Reports on the progress of the CAP will be made to Department as requested by Department's Grant Manager.

iii. Failure to respond to a Department request for a CAP or failure to correct a deficiency in the performance of the Agreement as specified by Department may result in termination of the Agreement.

8. Payment.

a. Payment Process. Subject to the terms and conditions established by the Agreement, the pricing per deliverable established by the Grant Work Plan, and the billing procedures established by Department, Department agrees to pay Grantee for services rendered in accordance with Section 215.422, Florida Statutes (F.S.).

b. Taxes. The Department is exempted from payment of State sales, use taxes and Federal excise taxes. The Grantee, however, shall not be exempted from paying any taxes that it is subject to, including State sales and use taxes, or for payment by Grantee to suppliers for taxes on materials used to fulfill its contractual obligations with Department. The Grantee shall not use Department's exemption number in securing such materials. The Grantee shall be responsible and liable for the payment of all its FICA/Social Security and other taxes resulting from this Agreement.

c. Maximum Amount of Agreement. The maximum amount of compensation under this Agreement, without an amendment, is described in the Standard Grant Agreement. Any additional funds necessary for the completion of this Project are the responsibility of Grantee.

d. Reimbursement for Costs. The Grantee shall be paid on a cost reimbursement basis for all eligible Project costs upon the completion, submittal, and approval of each deliverable identified in the Grant Work Plan. Reimbursement shall be requested on Exhibit C, Payment Request Summary Form. To be eligible for reimbursement, costs must be in compliance with laws, rules, and regulations applicable to expenditures of State funds, including, but not limited to, the Reference Guide for State Expenditures, which can be accessed at the following web address: https://www.myfloridacfo.com/Division/AA/Manuals/documents/ReferenceGuideforStateExpenditures.pdf.

e. Invoice Detail. All charges for services rendered or for reimbursement of expenses authorized by Department pursuant to the Grant Work Plan shall be submitted to Department in sufficient detail for a proper pre-audit and post-audit to be performed. The Grantee shall only invoice Department for deliverables that are completed in accordance with the Grant Work Plan.

f. Interim Payments. Interim payments may be made by Department, at its discretion, if the completion of deliverables to date have first been accepted in writing by Department's Grant Manager.

g. Final Payment Request. A final payment request should be submitted to Department no later than sixty (60) days following the expiration date of the Agreement to ensure the availability of funds for payment. However, all work performed pursuant to the Grant Work Plan must be performed on or before the expiration date of the Agreement.

h. Annual Appropriation Contingency. The State's performance and obligation to pay under this Agreement is contingent upon an annual appropriation by the Legislature. This Agreement is not a commitment of future appropriations. Authorization for continuation and completion of work and any associated payments may be rescinded, with proper notice, at the discretion of Department if the Legislature reduces or eliminates appropriations.

i. Interest Rates. All interest rates charged under the Agreement shall be calculated on the prevailing rate used by the State Board of Administration. To obtain the applicable interest rate, please refer to: www.myfloridacfo.com/Division/AA/Vendors/default.htm.

j. Refund of Payments to the Department. Any balance of unobligated funds that have been advanced or paid must be refunded to Department. Any funds paid in excess of the amount to which Grantee or subgrantee is entitled under the terms of the Agreement must be refunded to Department. If this Agreement is funded with federal funds and the Department is required to refund the federal government, the Grantee shall refund the Department its share of those funds.

9. Documentation Required for Cost Reimbursement Grant Agreements and Match.

If Cost Reimbursement or Match is authorized in Attachment 2, Special Terms and Conditions, the following conditions apply. Supporting documentation must be provided to substantiate cost reimbursement or match requirements for the following budget categories:

a. Salary/Wages. Grantee shall list personnel involved, position classification, direct salary rates, and hours spent on the Project in accordance with Attachment 3, Grant Work Plan in their documentation for reimbursement or match requirements.

b. Overhead/Indirect/General and Administrative Costs. If Grantee is being reimbursed for or claiming match for multipliers, all multipliers used (i.e., fringe benefits, overhead, indirect, and/or general and administrative rates) shall be supported by audit. If Department determines that multipliers charged by Grantee exceeded the rates supported by audit, Grantee shall be required to reimburse such funds to Department within thirty (30) days of written notification. Interest shall be charged on the excessive rate.

c. Contractual Costs (Subcontractors). Match or reimbursement requests for payments to subcontractors must be substantiated by copies of invoices with backup documentation identical to that required from Grantee. Subcontracts which involve payments for direct salaries shall clearly identify the personnel involved, salary rate per hour, and hours spent on the Project. All eligible multipliers used (i.e., fringe benefits, overhead, indirect, and/or general and administrative rates) shall be supported by audit. If Department determines that multipliers charged by any subcontractor exceeded the rates supported by audit, Grantee shall be required to reimburse such funds to Department within thirty (30) days of written notification. Interest shall be charged on the excessive rate. Nonconsumable and/or nonexpendable personal property or equipment costing $5,000 or more purchased for the Project under a subcontract is subject to the requirements set forth in Chapters 273 and/or 274, F.S., and Chapter 69I-72, Florida Administrative Code (F.A.C.) and/or Chapter 69I-73, F.A.C., as applicable. The Grantee shall be responsible for maintaining appropriate property records for any subcontracts that include the purchase of equipment as part of the delivery of services. The Grantee shall comply with this requirement and ensure its subcontracts issued under this Agreement, if any, impose this requirement, in writing, on its subcontractors.

   i. For fixed-price (vendor) subcontracts, the following provisions shall apply: The Grantee may award, on a competitive basis, fixed-price subcontracts to consultants/contractors in performing the work described in Attachment 3, Grant Work Plan. Invoices submitted to Department for fixed-price subcontracted activities shall be supported with a copy of the subcontractor's invoice and a copy of the tabulation form for the competitive procurement process (e.g., Invitation to Bid, Request for Proposals, or other similar competitive procurement document) resulting in the fixed-price subcontract. The Grantee may request approval from Department to award a fixed-price subcontract resulting from procurement methods other than those identified above. In this instance, Grantee shall request the advance written approval from Department's Grant Manager of the fixed price negotiated by Grantee. The letter of request shall be supported by a detailed budget and Scope of Services to be performed by the subcontractor. Upon receipt of Department Grant Manager's approval of the fixed-price amount, Grantee may proceed in finalizing the fixed-price subcontract.

   ii. If the procurement is subject to the Consultant's Competitive Negotiation Act under section 287.055, F.S. or the Brooks Act, Grantee must provide documentation clearly evidencing it has complied with the statutory or federal requirements.

d. Travel. All requests for match or reimbursement of travel expenses shall be in accordance with Section 112.061, F.S.

e. Direct Purchase Equipment. For the purposes of this Agreement, Equipment is defined as capital outlay costing $5,000 or more. Match or reimbursement for Grantee's direct purchase of equipment is subject to specific approval of Department, and does not include any equipment purchased under the delivery of services to be completed by a subcontractor. Include copies of invoices or receipts to document purchases, and a properly completed Exhibit B, Property Reporting Form.

f. Rental/Lease of Equipment. Match or reimbursement requests for rental/lease of equipment must include copies of invoices or receipts to document charges.

g. Miscellaneous/Other Expenses. If miscellaneous or other expenses, such as materials, supplies, non-excluded phone expenses, reproduction, or mailing, are reimbursable or available for match or reimbursement under the terms of this Agreement, the documentation supporting these expenses must be itemized and include copies of receipts or invoices. Additionally, independent of Grantee's contract obligations to its subcontractor, Department shall not reimburse any of the following types of charges: cell phone usage; attorney's fees or court costs; civil or administrative penalties; or handling fees, such as set percent overages associated with purchasing supplies or equipment.

h. Land Acquisition. Reimbursement for the costs associated with acquiring interest and/or rights to real property (including access rights through ingress/egress easements, leases, license agreements, or other site access agreements; and/or obtaining record title ownership of real property through purchase) must be supported by the following, as applicable: Copies of Property Appraisals, Environmental Site Assessments, Surveys and Legal Descriptions, Boundary Maps, Acreage Certification, Title Search Reports, Title Insurance, Closing Statements/Documents, Deeds, Leases, Easements, License Agreements, or other legal instrument documenting

acquired property interest and/or rights. If land acquisition costs are used to meet match requirements, Grantee agrees that those funds shall not be used as match for any other Agreement supported by State or Federal funds.

10. Status Reports.

The Grantee shall submit status reports quarterly, unless otherwise specified in the Attachments, on Exhibit A, Progress Report Form, to Department's Grant Manager describing the work performed during the reporting period, problems encountered, problem resolutions, scheduled updates, and proposed work for the next reporting period. Quarterly status reports are due no later than twenty (20) days following the completion of the quarterly reporting period. For the purposes of this reporting requirement, the quarterly reporting periods end on March 31, June 30, September 30 and December 31. The Department will review the required reports submitted by Grantee within thirty (30) days.

11. Retainage.

The following provisions apply if Department withholds retainage under this Agreement:

a. The Department reserves the right to establish the amount and application of retainage on the work performed under this Agreement up to the maximum percentage described in Attachment 2, Special Terms and Conditions. Retainage may be withheld from each payment to Grantee pending satisfactory completion of work and approval of all deliverables.

b. If Grantee fails to perform the requested work, or fails to perform the work in a satisfactory manner, Grantee shall forfeit its right to payment of the retainage associated with the work. Failure to perform includes, but is not limited to, failure to submit the required deliverables or failure to provide adequate documentation that the work was actually performed. The Department shall provide written notification to Grantee of the failure to perform that shall result in retainage forfeiture. If the Grantee does not correct the failure to perform within the timeframe stated in Department's notice, the retainage will be forfeited to Department.

c. No retainage shall be released or paid for incomplete work while this Agreement is suspended.

d. Except as otherwise provided above, Grantee shall be paid the retainage associated with the work, provided Grantee has completed the work and submits an invoice for retainage held in accordance with the invoicing procedures under this Agreement.

12. Insurance.

a. Insurance Requirements for Sub-Grantees and/or Subcontractors. The Grantee shall require its sub-grantees and/or subcontractors, if any, to maintain insurance coverage of such types and with such terms and limits as described in this Agreement. The Grantee shall require all its sub-grantees and/or subcontractors, if any, to make compliance with the insurance requirements of this Agreement a condition of all contracts that are related to this Agreement. Sub-grantees and/or subcontractors must provide proof of insurance upon request.

b. Deductibles. The Department shall be exempt from, and in no way liable for, any sums of money representing a deductible in any insurance policy. The payment of such deductible shall be the sole responsibility of the Grantee providing such insurance.

c. Proof of Insurance. Upon execution of this Agreement, Grantee shall provide Department documentation demonstrating the existence and amount for each type of applicable insurance coverage ***prior to*** performance of any work under this Agreement. Upon receipt of written request from Department, Grantee shall furnish Department with proof of applicable insurance coverage by standard form certificates of insurance, a self-insured authorization, or other certification of self-insurance.

d. Duty to Maintain Coverage. In the event that any applicable coverage is cancelled by the insurer for any reason, or if Grantee cannot get adequate coverage, Grantee shall immediately notify Department of such cancellation and shall obtain adequate replacement coverage conforming to the requirements herein and provide proof of such replacement coverage within ten (10) days after the cancellation of coverage.

e. Insurance Trust. If the Grantee's insurance is provided through an insurance trust, the Grantee shall instead add the Department of Environmental Protection, its employees, and officers as an additional covered party everywhere the Agreement requires them to be added as an additional insured.

13. Termination.

a. Termination for Convenience. When it is in the State's best interest, Department may, at its sole discretion, terminate the Agreement in whole or in part by giving 30 days' written notice to Grantee. The Department shall notify Grantee of the termination for convenience with instructions as to the effective date of termination or the specific stage of work at which the Agreement is to be terminated. The Grantee must submit all invoices for work to be paid under this Agreement within thirty (30) days of the effective date of termination. The Department shall not pay any invoices received after thirty (30) days of the effective date of termination.

b. Termination for Cause. The Department may terminate this Agreement if any of the events of default described in the Events of Default provisions below occur or in the event that Grantee fails to fulfill any of its other

obligations under this Agreement. If, after termination, it is determined that Grantee was not in default, or that the default was excusable, the rights and obligations of the parties shall be the same as if the termination had been issued for the convenience of Department. The rights and remedies of Department in this clause are in addition to any other rights and remedies provided by law or under this Agreement.

c. Grantee Obligations upon Notice of Termination. After receipt of a notice of termination or partial termination unless as otherwise directed by Department, Grantee shall not furnish any service or deliverable on the date, and to the extent specified, in the notice. However, Grantee shall continue work on any portion of the Agreement not terminated. If the Agreement is terminated before performance is completed, Grantee shall be paid only for that work satisfactorily performed for which costs can be substantiated. The Grantee shall not be entitled to recover any cancellation charges or lost profits.
d. Continuation of Prepaid Services. If Department has paid for any services prior to the expiration, cancellation, or termination of the Agreement, Grantee shall continue to provide Department with those services for which it has already been paid or, at Department's discretion, Grantee shall provide a refund for services that have been paid for but not rendered.
e. Transition of Services Upon Termination, Expiration, or Cancellation of the Agreement. If services provided under the Agreement are being transitioned to another provider(s), Grantee shall assist in the smooth transition of Agreement services to the subsequent provider(s). This requirement is at a minimum an affirmative obligation to cooperate with the new provider(s), however additional requirements may be outlined in the Grant Work Plan. The Grantee shall not perform any services after Agreement expiration or termination, except as necessary to complete the transition or continued portion of the Agreement, if any.

14. Notice of Default.

If Grantee defaults in the performance of any covenant or obligation contained in the Agreement, including, any of the events of default, Department shall provide notice to Grantee and an opportunity to cure that is reasonable under the circumstances. This notice shall state the nature of the failure to perform and provide a time certain for correcting the failure. The notice will also provide that, should the Grantee fail to perform within the time provided, Grantee will be found in default, and Department may terminate the Agreement effective as of the date of receipt of the default notice.

15. Events of Default.

Provided such failure is not the fault of Department or outside the reasonable control of Grantee, the following non-exclusive list of events, acts, or omissions, shall constitute events of default:

a. The commitment of any material breach of this Agreement by Grantee, including failure to timely deliver a material deliverable, failure to perform the minimal level of services required for a deliverable, discontinuance of the performance of the work, failure to resume work that has been discontinued within a reasonable time after notice to do so, or abandonment of the Agreement;
b. The commitment of any material misrepresentation or omission in any materials, or discovery by the Department of such, made by the Grantee in this Agreement or in its application for funding;
c. Failure to submit any of the reports required by this Agreement or having submitted any report with incorrect, incomplete, or insufficient information;
d. Failure to honor any term of the Agreement;
e. Failure to abide by any statutory, regulatory, or licensing requirement, including an entry of an order revoking the certificate of authority granted to the Grantee by a state or other licensing authority;
f. Failure to pay any and all entities, individuals, and furnishing labor or materials, or failure to make payment to any other entities as required by this Agreement;
g. Employment of an unauthorized alien in the performance of the work, in violation of Section 274 (A) of the Immigration and Nationality Act;
h. Failure to maintain the insurance required by this Agreement;
i. One or more of the following circumstances, uncorrected for more than thirty (30) days unless, within the specified 30-day period, Grantee (including its receiver or trustee in bankruptcy) provides to Department adequate assurances, reasonably acceptable to Department, of its continuing ability and willingness to fulfill its obligations under the Agreement:
    i. Entry of an order for relief under Title 11 of the United States Code;
    ii. The making by Grantee of a general assignment for the benefit of creditors;
    iii. The appointment of a general receiver or trustee in bankruptcy of Grantee's business or property; and/or
    iv. An action by Grantee under any state insolvency or similar law for the purpose of its bankruptcy, reorganization, or liquidation.

16. Suspension of Work.

The Department may, in its sole discretion, suspend any or all activities under the Agreement, at any time, when it is in the best interest of the State to do so. The Department shall provide Grantee written notice outlining the particulars of suspension. Examples of reasons for suspension include, but are not limited to, budgetary constraints, declaration of emergency, or other such circumstances. After receiving a suspension notice, Grantee shall comply with the notice. Within 90 days, or any longer period agreed to by the parties, Department shall either: (1) issue a notice authorizing resumption of work, at which time activity shall resume; or (2) terminate the Agreement. If the Agreement is terminated after 30 days of suspension, the notice of suspension shall be deemed to satisfy the thirty (30) days' notice required for a notice of termination for convenience. Suspension of work shall not entitle Grantee to any additional compensation.

17. Force Majeure.

The Grantee shall not be responsible for delay resulting from its failure to perform if neither the fault nor the negligence of Grantee or its employees or agents contributed to the delay and the delay is due directly to acts of God, wars, acts of public enemies, strikes, fires, floods, or other similar cause wholly beyond Grantee's control, or for any of the foregoing that affect subcontractors or suppliers if no alternate source of supply is available to Grantee. In case of any delay Grantee believes is excusable, Grantee shall notify Department in writing of the delay or potential delay and describe the cause of the delay either (1) within ten days after the cause that creates or will create the delay first arose, if Grantee could reasonably foresee that a delay could occur as a result; or (2) if delay is not reasonably foreseeable, within five days after the date Grantee first had reason to believe that a delay could result. **THE FOREGOING SHALL CONSTITUTE THE GRANTEE'S SOLE REMEDY OR EXCUSE WITH RESPECT TO DELAY.** Providing notice in strict accordance with this paragraph is a condition precedent to such remedy. No claim for damages, other than for an extension of time, shall be asserted against Department. The Grantee shall not be entitled to an increase in the Agreement price or payment of any kind from Department for direct, indirect, consequential, impact or other costs, expenses or damages, including but not limited to costs of acceleration or inefficiency, arising because of delay, disruption, interference, or hindrance from any cause whatsoever. If performance is suspended or delayed, in whole or in part, due to any of the causes described in this paragraph, after the causes have ceased to exist Grantee shall perform at no increased cost, unless Department determines, in its sole discretion, that the delay will significantly impair the value of the Agreement to Department, in which case Department may: (1) accept allocated performance or deliveries from Grantee, provided that Grantee grants preferential treatment to Department with respect to products subjected to allocation; (2) contract with other sources (without recourse to and by Grantee for the related costs and expenses) to replace all or part of the products or services that are the subject of the delay, which purchases may be deducted from the Agreement quantity; or (3) terminate Agreement in whole or in part.

18. Indemnification.

a. The Grantee shall be fully liable for the actions of its agents, employees, partners, or subcontractors and shall fully indemnify, defend, and hold harmless Department and its officers, agents, and employees, from suits, actions, damages, and costs of every name and description arising from or relating to:
    i. personal injury and damage to real or personal tangible property alleged to be caused in whole or in part by Grantee, its agents, employees, partners, or subcontractors; provided, however, that Grantee shall not indemnify for that portion of any loss or damages proximately caused by the negligent act or omission of Department;
    ii. the Grantee's breach of this Agreement or the negligent acts or omissions of Grantee.

b. The Grantee's obligations under the preceding paragraph with respect to any legal action are contingent upon Department giving Grantee: (1) written notice of any action or threatened action; (2) the opportunity to take over and settle or defend any such action at Grantee's sole expense; and (3) assistance in defending the action at Grantee's sole expense. The Grantee shall not be liable for any cost, expense, or compromise incurred or made by Department in any legal action without Grantee's prior written consent, which shall not be unreasonably withheld.

c. Notwithstanding sections a. and b. above, the following is the sole indemnification provision that applies to Grantees that are governmental entities: Each party hereto agrees that it shall be solely responsible for the negligent or wrongful acts of its employees and agents. However, nothing contained herein shall constitute a waiver by either party of its sovereign immunity or the provisions of Section 768.28, F.S. Further, nothing herein shall be construed as consent by a state agency or subdivision of the State to be sued by third parties in any matter arising out of any contract or this Agreement.

d. No provision in this Agreement shall require Department to hold harmless or indemnify Grantee, insure or assume liability for Grantee's negligence, waive Department's sovereign immunity under the laws of Florida, or

otherwise impose liability on Department for which it would not otherwise be responsible. Any provision, implication or suggestion to the contrary is null and void.

19. Limitation of Liability.

The Department's liability for any claim arising from this Agreement is limited to compensatory damages in an amount no greater than the sum of the unpaid balance of compensation due for goods or services rendered pursuant to and in compliance with the terms of the Agreement. Such liability is further limited to a cap of $100,000.

20. Remedies.

Nothing in this Agreement shall be construed to make Grantee liable for force majeure events. Nothing in this Agreement, including financial consequences for nonperformance, shall limit Department's right to pursue its remedies for other types of damages under the Agreement, at law or in equity. The Department may, in addition to other remedies available to it, at law or in equity and upon notice to Grantee, retain such monies from amounts due Grantee as may be necessary to satisfy any claim for damages, penalties, costs and the like asserted by or against it.

21. Waiver.

The delay or failure by Department to exercise or enforce any of its rights under this Agreement shall not constitute or be deemed a waiver of Department's right thereafter to enforce those rights, nor shall any single or partial exercise of any such right preclude any other or further exercise thereof or the exercise of any other right.

22. Statutory Notices Relating to Unauthorized Employment and Subcontracts.

a. The Department shall consider the employment by any Grantee of unauthorized aliens a violation of Section 274A(e) of the Immigration and Nationality Act. If Grantee/subcontractor knowingly employs unauthorized aliens, such violation shall be cause for unilateral cancellation of this Agreement. The Grantee shall be responsible for including this provision in all subcontracts with private organizations issued as a result of this Agreement.

b. Pursuant to Sections 287.133, 287.134, and 287.137 F.S., the following restrictions apply to persons placed on the convicted vendor list, discriminatory vendor list, or the antitrust violator vendor list:

   i. Public Entity Crime. A person or affiliate who has been placed on the convicted vendor list following a conviction for a public entity crime may not submit a bid, proposal, or reply on a contract to provide any goods or services to a public entity; may not submit a bid, proposal, or reply on a contract with a public entity for the construction or repair of a public building or public work; may not submit bids, proposals, or replies on leases of real property to a public entity; may not be awarded or perform work as a Grantee, supplier, subcontractor, or consultant under a contract with any public entity; and may not transact business with any public entity in excess of the threshold amount provided in Section 287.017, F.S., for CATEGORY TWO for a period of 36 months following the date of being placed on the convicted vendor list.

   ii. Discriminatory Vendors. An entity or affiliate who has been placed on the discriminatory vendor list may not submit a bid, proposal, or reply on a contract to provide any goods or services to a public entity; may not submit a bid, proposal, or reply on a contract with a public entity for the construction or repair of a public building or public work; may not submit bids, proposals, or replies on leases of real property to a public entity; may not be awarded or perform work as a contractor, supplier, subcontractor, or consultant under a contract with any public entity; and may not transact business with any public entity.

   iii. Antitrust Violator Vendors. A person or an affiliate who has been placed on the antitrust violator vendor list following a conviction or being held civilly liable for an antitrust violation may not submit a bid, proposal, or reply on any contract to provide any good or services to a public entity; may not submit a bid, proposal, or reply on any contract with a public entity for the construction or repair of a public building or public work; may not submit a bid, proposal, or reply on leases of real property to a public entity; may not be awarded or perform work as a Grantee, supplier, subcontractor, or consultant under a contract with a public entity; and may not transact new business with a public entity.

   iv. Notification. The Grantee shall notify Department if it or any of its suppliers, subcontractors, or consultants have been placed on the convicted vendor list, the discriminatory vendor list, or antitrust violator vendor list during the life of the Agreement. The Florida Department of Management Services is responsible for maintaining the discriminatory vendor list and the antitrust violator vendor list and posts the list on its website. Questions regarding the discriminatory vendor list or antitrust violator vendor list may be directed to the Florida Department of Management Services, Office of Supplier Diversity, at (850) 487-0915.

23. Compliance with Federal, State and Local Laws.

a. The Grantee and all its agents shall comply with all federal, state and local regulations, including, but not limited to, nondiscrimination, wages, social security, workers' compensation, licenses, and registration requirements. The Grantee shall include this provision in all subcontracts issued as a result of this Agreement.
b. No person, on the grounds of race, creed, color, religion, national origin, age, gender, or disability, shall be excluded from participation in; be denied the proceeds or benefits of; or be otherwise subjected to discrimination in performance of this Agreement.
c. This Agreement shall be governed by and construed in accordance with the laws of the State of Florida.
d. Any dispute concerning performance of the Agreement shall be processed as described herein. Jurisdiction for any damages arising under the terms of the Agreement will be in the courts of the State, and venue will be in the Second Judicial Circuit, in and for Leon County. Except as otherwise provided by law, the parties agree to be responsible for their own attorney fees incurred in connection with disputes arising under the terms of this Agreement.

24. Scrutinized Companies.

a. Grantee certifies that it is not on the Scrutinized Companies that Boycott Israel List or engaged in a boycott of Israel. Pursuant to Section 287.135, F.S., the Department may immediately terminate this Agreement at its sole option if the Grantee is found to have submitted a false certification; or if the Grantee is placed on the Scrutinized Companies that Boycott Israel List or is engaged in the boycott of Israel during the term of the Agreement.
b. If this Agreement is for more than one million dollars, the Grantee certifies that it is also not on the Scrutinized Companies with Activities in Sudan, Scrutinized Companies with Activities in the Iran Petroleum Energy Sector List, or engaged with business operations in Cuba or Syria as identified in Section 287.135, F.S. Pursuant to Section 287.135, F.S., the Department may immediately terminate this Agreement at its sole option if the Grantee is found to have submitted a false certification; or if the Grantee is placed on the Scrutinized Companies with Activities in Sudan List, or Scrutinized Companies with Activities in the Iran Petroleum Energy Sector List, or engaged with business operations in Cuba or Syria during the term of the Agreement.
c. As provided in Subsection 287.135(8), F.S., if federal law ceases to authorize these contracting prohibitions then they shall become inoperative.

25. Lobbying and Integrity.

The Grantee agrees that no funds received by it under this Agreement will be expended for the purpose of lobbying the Legislature or a State agency pursuant to Section 216.347, F.S., except that pursuant to the requirements of Section 287.058(6), F.S., during the term of any executed agreement between Grantee and the State, Grantee may lobby the executive or legislative branch concerning the scope of services, performance, term, or compensation regarding that agreement. The Grantee shall comply with Sections 11.062 and 216.347, F.S.

26. Record Keeping.

The Grantee shall maintain books, records and documents directly pertinent to performance under this Agreement in accordance with United States generally accepted accounting principles (US GAAP) consistently applied. The Department, the State, or their authorized representatives shall have access to such records for audit purposes during the term of this Agreement and for five (5) years following the completion date or termination of the Agreement. In the event that any work is subcontracted, Grantee shall similarly require each subcontractor to maintain and allow access to such records for audit purposes. Upon request of Department's Inspector General, or other authorized State official, Grantee shall provide any type of information the Inspector General deems relevant to Grantee's integrity or responsibility. Such information may include, but shall not be limited to, Grantee's business or financial records, documents, or files of any type or form that refer to or relate to Agreement. The Grantee shall retain such records for the longer of: (1) three years after the expiration of the Agreement; or (2) the period required by the General Records Schedules maintained by the Florida Department of State (available at: http://dos.myflorida.com/library-archives/records-management/general-records-schedules/).

27. Audits.

a. Inspector General. The Grantee understands its duty, pursuant to Section 20.055(5), F.S., to cooperate with the inspector general in any investigation, audit, inspection, review, or hearing. The Grantee will comply with this duty and ensure that its sub-grantees and/or subcontractors issued under this Agreement, if any, impose this requirement, in writing, on its sub-grantees and/or subcontractors, respectively.
b. Physical Access and Inspection. Department personnel shall be given access to and may observe and inspect work being performed under this Agreement, with reasonable notice and during normal business hours, including by any of the following methods:
    i. Grantee shall provide access to any location or facility on which Grantee is performing work, or storing or staging equipment, materials or documents;

ii. Grantee shall permit inspection of any facility, equipment, practices, or operations required in performance of any work pursuant to this Agreement; and,
iii. Grantee shall allow and facilitate sampling and monitoring of any substances, soils, materials or parameters at any location reasonable or necessary to assure compliance with any work or legal requirements pursuant to this Agreement.

c. Special Audit Requirements. The Grantee shall comply with the applicable provisions contained in Attachment 5, Special Audit Requirements. Each amendment that authorizes a funding increase or decrease shall include an updated copy of Exhibit 1, to Attachment 5. If Department fails to provide an updated copy of Exhibit 1 to include in each amendment that authorizes a funding increase or decrease, Grantee shall request one from the Department's Grants Manager. The Grantee shall consider the type of financial assistance (federal and/or state) identified in Attachment 5, Exhibit 1 and determine whether the terms of Federal and/or Florida Single Audit Act Requirements may further apply to lower tier transactions that may be a result of this Agreement. For federal financial assistance, Grantee shall utilize the guidance provided under 2 CFR §200.330 for determining whether the relationship represents that of a subrecipient or vendor. For State financial assistance, Grantee shall utilize the form entitled "Checklist for Nonstate Organizations Recipient/Subrecipient vs Vendor Determination" (form number DFS-A2-NS) that can be found under the "Links/Forms" section appearing at the following website: https:\\apps.fldfs.com\fsaa.

d. Proof of Transactions. In addition to documentation provided to support cost reimbursement as described herein, Department may periodically request additional proof of a transaction to evaluate the appropriateness of costs to the Agreement pursuant to State guidelines (including cost allocation guidelines) and federal, if applicable. Allowable costs and uniform administrative requirements for federal programs can be found under 2 CFR 200. The Department may also request a cost allocation plan in support of its multipliers (overhead, indirect, general administrative costs, and fringe benefits). The Grantee must provide the additional proof within thirty (30) days of such request.

e. No Commingling of Funds. The accounting systems for all Grantees must ensure that these funds are not commingled with funds from other agencies. Funds from each agency must be accounted for separately. Grantees are prohibited from commingling funds on either a program-by-program or a project-by-project basis. Funds specifically budgeted and/or received for one project may not be used to support another project. Where a Grantee's, or subrecipient's, accounting system cannot comply with this requirement, Grantee, or subrecipient, shall establish a system to provide adequate fund accountability for each project it has been awarded.
    i. If Department finds that these funds have been commingled, Department shall have the right to demand a refund, either in whole or in part, of the funds provided to Grantee under this Agreement for non-compliance with the material terms of this Agreement. The Grantee, upon such written notification from Department shall refund, and shall forthwith pay to Department, the amount of money demanded by Department. Interest on any refund shall be calculated based on the prevailing rate used by the State Board of Administration. Interest shall be calculated from the date(s) the original payment(s) are received from Department by Grantee to the date repayment is made by Grantee to Department.
    ii. In the event that the Grantee recovers costs, incurred under this Agreement and reimbursed by Department, from another source(s), Grantee shall reimburse Department for all recovered funds originally provided under this Agreement and interest shall be charged for those recovered costs as calculated on from the date(s) the payment(s) are recovered by Grantee to the date repayment is made to Department.
    iii. Notwithstanding the requirements of this section, the above restrictions on commingling funds do not apply to agreements where payments are made purely on a cost reimbursement basis.

28. Conflict of Interest.

The Grantee covenants that it presently has no interest and shall not acquire any interest which would conflict in any manner or degree with the performance of services required.

29. Independent Contractor.

The Grantee is an independent contractor and is not an employee or agent of Department.

30. Subcontracting.

a. Unless otherwise specified in the Special Terms and Conditions, all services contracted for are to be performed solely by Grantee.

b. The Department may, for cause, require the replacement of any Grantee employee, subcontractor, or agent. For cause, includes, but is not limited to, technical or training qualifications, quality of work, change in security status, or non-compliance with an applicable Department policy or other requirement.

c. The Department may, for cause, deny access to Department's secure information or any facility by any Grantee employee, subcontractor, or agent.
d. The Department's actions under paragraphs b. or c. shall not relieve Grantee of its obligation to perform all work in compliance with the Agreement. The Grantee shall be responsible for the payment of all monies due under any subcontract. The Department shall not be liable to any subcontractor for any expenses or liabilities incurred under any subcontract and Grantee shall be solely liable to the subcontractor for all expenses and liabilities incurred under any subcontract.
e. The Department will not deny Grantee's employees, subcontractors, or agents access to meetings within the Department's facilities, unless the basis of Department's denial is safety or security considerations.
f. The Department supports diversity in its procurement program and requests that all subcontracting opportunities afforded by this Agreement embrace diversity enthusiastically. The award of subcontracts should reflect the full diversity of the citizens of the State. A list of minority-owned firms that could be offered subcontracting opportunities may be obtained by contacting the Office of Supplier Diversity at (850) 487-0915.
g. The Grantee shall not be liable for any excess costs for a failure to perform, if the failure to perform is caused by the default of a subcontractor at any tier, and if the cause of the default is completely beyond the control of both Grantee and the subcontractor(s), and without the fault or negligence of either, unless the subcontracted products or services were obtainable from other sources in sufficient time for Grantee to meet the required delivery schedule.

31. Guarantee of Parent Company.

If Grantee is a subsidiary of another corporation or other business entity, Grantee asserts that its parent company will guarantee all of the obligations of Grantee for purposes of fulfilling the obligations of Agreement. In the event Grantee is sold during the period the Agreement is in effect, Grantee agrees that it will be a requirement of sale that the new parent company guarantee all of the obligations of Grantee.

32. Survival.

The respective obligations of the parties, which by their nature would continue beyond the termination or expiration of this Agreement, including without limitation, the obligations regarding confidentiality, proprietary interests, and public records, shall survive termination, cancellation, or expiration of this Agreement.

33. Third Parties.

The Department shall not be deemed to assume any liability for the acts, failures to act or negligence of Grantee, its agents, servants, and employees, nor shall Grantee disclaim its own negligence to Department or any third party. This Agreement does not and is not intended to confer any rights or remedies upon any person other than the parties. If Department consents to a subcontract, Grantee will specifically disclose that this Agreement does not create any third-party rights. Further, no third parties shall rely upon any of the rights and obligations created under this Agreement.

34. Severability.

If a court of competent jurisdiction deems any term or condition herein void or unenforceable, the other provisions are severable to that void provision, and shall remain in full force and effect.

35. Grantee's Employees, Subcontractors and Agents.

All Grantee employees, subcontractors, or agents performing work under the Agreement shall be properly trained technicians who meet or exceed any specified training qualifications. Upon request, Grantee shall furnish a copy of technical certification or other proof of qualification. All employees, subcontractors, or agents performing work under Agreement must comply with all security and administrative requirements of Department and shall comply with all controlling laws and regulations relevant to the services they are providing under the Agreement.

36. Assignment.

The Grantee shall not sell, assign, or transfer any of its rights, duties, or obligations under the Agreement, or under any purchase order issued pursuant to the Agreement, without the prior written consent of Department. In the event of any assignment, Grantee remains secondarily liable for performance of the Agreement, unless Department expressly waives such secondary liability. The Department may assign the Agreement with prior written notice to Grantee of its intent to do so.

37. Compensation Report.

If this Agreement is a sole-source, public-private agreement or if the Grantee, through this agreement with the State, annually receive 50% or more of their budget from the State or from a combination of State and Federal funds, the Grantee shall provide an annual report, including the most recent IRS Form 990, detailing the total compensation for the entities' executive leadership teams. Total compensation shall include salary, bonuses, cashed-in leave, cash equivalents, severance pay, retirement benefits, deferred compensation, real-property gifts, and any other payout. The Grantee must also inform the Department of any changes in total executive compensation between the annual

reports. All compensation reports must indicate what percent of compensation comes directly from the State or Federal allocations to the Grantee.

38. Execution in Counterparts and Authority to Sign.

This Agreement, any amendments, and/or change orders related to the Agreement, may be executed in counterparts, each of which shall be an original and all of which shall constitute the same instrument. In accordance with the Electronic Signature Act of 1996, electronic signatures, including facsimile transmissions, may be used and shall have the same force and effect as a written signature. Each person signing this Agreement warrants that he or she is duly authorized to do so and to bind the respective party to the Agreement.

STATE OF FLORIDA
DEPARTMENT OF ENVIRONMENTAL PROTECTION
Special Terms and Conditions
AGREEMENT NO. LPA0212

ATTACHMENT 2

These Special Terms and Conditions shall be read together with general terms outlined in the Standard Terms and Conditions, Attachment 1. Where in conflict, these more specific terms shall apply.

1. Scope of Work.
The Project funded under this Agreement is Polk Regional Water Cooperative Heartland Headwaters Protection and Sustainability (Project). The Project is defined in more detail in Attachment 3, Grant Work Plan.

2. Duration.
a. Reimbursement Period. The reimbursement period for this Agreement begins on July 1, 2019 and ends at the expiration of the Agreement.
b. Extensions. There are extensions available for this Project.
c. Service Periods. Additional service periods are not authorized under this Agreement.

3. Payment Provisions.
a. Compensation. This is a cost reimbursement Agreement. The Grantee shall be compensated under this Agreement as described in Attachment 3.
b. Invoicing. Invoicing will occur as indicated in Attachment 3.
c. Advance Pay. Advance Pay is not authorized under this Agreement.

4. Cost Eligible for Reimbursement or Matching Requirements.
Reimbursement for costs or availability for costs to meet matching requirements shall be limited to the following budget categories, as defined in the Reference Guide for State Expenditures, as indicated:

Reimbursement	Match	Category
☐	☐	Salaries/Wages
		Overhead/Indirect/General and Administrative Costs:
☐	☐	a. Fringe Benefits, N/A.
☐	☐	b. Indirect Costs, N/A.
☒	☐	Contractual (Subcontractors)
☐	☐	Travel, in accordance with Section 112, F.S.
☐	☐	Equipment
☐	☐	Rental/Lease of Equipment
☐	☐	Miscellaneous/Other Expenses
☒	☐	Land Acquisition

5. Equipment Purchase.
No Equipment Purchases shall be funded under this Agreement.

6. Land Acquisition.
The Grantee is authorized to purchase the land described in Attachment 3, Grant Work Plan. All land acquired under this Agreement shall be used in perpetuity for the purposes described herein. The following language shall be included on the deed to the property purchased under this Agreement:
"By acceptance of this deed, Grantee hereby agrees that the use of the property described herein (the "Property") shall be subject to the terms and conditions of the Grant Award Agreement (DEP Agreement No. LPA0212), summarized in the Memorandum of Grant, which is attached hereto as Exhibit F and by reference made a part hereof (hereinafter referred to as the "Restrictive Covenants"). These Restrictive Covenants shall run with the title to the Property in perpetuity and be binding upon Grantee and all successive owners (and all parties claiming by,

through and under the owners) of the Property. The Florida Department of Environmental Protection ("DEP") shall be deemed a third-party beneficiary of these Restrictive Covenants in a court of competent jurisdiction. DEP shall have the authority to enforce these Restrictive Covenants in any judicial proceeding seeking any remedy recognizable at law or in equity, including an action or lawsuit seeking damages, injunction, specific performance, or any other form of relief, against any person, firm or entity violating or attempting to violate any of these Restrictive Covenants. The failure by DEP to enforce any covenant or restriction contained herein shall in no event be deemed a waiver of such covenant or restriction or of the right of DEP to thereafter enforce such covenant or restriction. The invalidation of any one of the provisions of these Restrictive Covenants by a court of competent jurisdiction shall in no way affect any of the other provisions of these Restrictive Covenants, which shall remain in full force and effect. Venue for enforcement actions regarding these Restrictive Covenants shall be in the Circuit Court of Polk County, Florida. Grantee agrees to incorporate these Restrictive Covenants in any subsequent deed or other written legal instrument by which Grantee transfers or conveys fee simple title or any other lesser estate in the Property or any part thereof to a third party either verbatim or by making an express reference to these Restrictive Covenants and specifically identifying the official records book and page at which this deed is recorded in the public records of Polk County, Florida. Grantee further agrees to give written notice to DEP of the conveyance or transfer of any interest in the Property at least 20 calendar days prior to the date of such conveyance or transfer."
"Requests for release of the Restrictive Covenants from the Property shall be directed to the Florida Department of Environmental Protection, Office of General Counsel, Attention: Contracts Attorney, 3900 Commonwealth Boulevard, Tallahassee, Florida 32399-3000. The request should include the DEP Agreement No. LPA0212, the total funding amount paid by the State of Florida, the date of acquisition, and the Department's Grant Manager's name."
If for any reason the above-referenced federal and state deed language is not incorporated into the deed by which the Grantee acquired the Property, the Grantee shall execute and record a separate Declaration of Restrictive Covenant that incorporates the Memorandum of Grant as an Exhibit, and that shall run with the title to the Property. The Grantee shall provide a copy of the recorded Declaration of Restrictive Covenant to the Department as evidence of compliance with this provision. Any applicable recording fees are the sole responsibility of the Grantee.

7. Match Requirements

There is no match required on the part of the Grantee under this Agreement.

8. Insurance Requirements

Required Coverage. At all times during the Agreement the Grantee, at its sole expense, shall maintain insurance coverage of such types and with such terms and limits described below. The limits of coverage under each policy maintained by the Grantee shall not be interpreted as limiting the Grantee's liability and obligations under the Agreement. All insurance policies shall be through insurers licensed and authorized to issue policies in Florida, or alternatively, Grantee may provide coverage through a self-insurance program established and operating under the laws of Florida. Additional insurance requirements for this Agreement may be required elsewhere in this Agreement, however the minimum insurance requirements applicable to this Agreement are:

a. Commercial General Liability Insurance.
The Grantee shall provide adequate commercial general liability insurance coverage and hold such liability insurance at all times during the Agreement. The Department, its employees, and officers shall be named as an additional insured on any general liability policies. The minimum limits shall be $250,000 for each occurrence and $500,000 policy aggregate.

b. Commercial Automobile Insurance.
If the Grantee's duties include the use of a commercial vehicle, the Grantee shall maintain automobile liability, bodily injury, and property damage coverage. Insuring clauses for both bodily injury and property damage shall provide coverage on an occurrence basis. The Department, its employees, and officers shall be named as an additional insured on any automobile insurance policy. The minimum limits shall be as follows:

$200,000/300,000	Automobile Liability for Company-Owned Vehicles, if applicable
$200,000/300,000	Hired and Non-owned Automobile Liability Coverage

c. Workers' Compensation and Employer's Liability Coverage.
The Grantee shall provide workers' compensation, in accordance with Chapter 440, F.S. if applicable.

d. Other Insurance.
None.

9. Quality Assurance Requirements.
There are no special Quality Assurance requirements under this Agreement.

10. Retainage.
No retainage is required under this Agreement.

11. Subcontracting.
The Grantee may subcontract work under this Agreement without the prior written consent of the Department's Grant Manager except for certain fixed-price subcontracts pursuant to this Agreement, which require prior approval. The Grantee shall submit a copy of the executed subcontract to the Department prior to submitting any invoices for subcontracted work. Regardless of any subcontract, the Grantee is ultimately responsible for all work to be performed under this Agreement.

12. State-owned Land.
The work will not be performed on State-owned land.

13. Office of Policy and Budget Reporting.
The Grantee will identify the expected return on investment for this project and provide this information to the Governor's Office of Policy and Budget (OPB) within three months of execution of this Agreement. For each full calendar quarter thereafter, the Grantee will provide quarterly update reports directly to OPB, no later than 20 days after the end of each quarter, documenting the positive return on investment to the state that results from the Grantee's project and its use of funds provided under this Agreement. Quarterly reports will continue until the Grantee is instructed by OPB that no further reports are needed, or until the end of this Agreement, whichever occurs first. All reports shall be submitted electronically to OPB at env.roi@laspbs.state.fl.us, and a copy shall also be submitted to the Department at legislativeaffairs@floridaDEP.gov.

14. Additional Terms.
None.

ATTACHMENT 3
GRANT WORK PLAN

PROJECT TITLE: Polk Regional Water Cooperative Heartland Headwaters Protection and Sustainability

PROJECT LOCATION: The Project will be located within the service areas of the Polk Regional Water Cooperative (PRWC) (Grantee). The PRWC is made up of Polk County and 15 municipalities. The County seat is located in Bartow, Florida; with an approximate Lat/Long of 27.8940, -81.8512.

PROJECT BACKGROUND: In 2017, the Florida Legislature passed HB 573, better known as the Heartland Headwaters Protection and Sustainability Act (Chapter No. 2017-111, Laws of Florida). The Act statutorily recognizes the vital importance of those portions of the Green Swamp Area of Critical State Concern that lie within the jurisdictional bounds of Polk and Lake counties and designates Polk County's aquifers as the headwaters for six of Florida's major rivers: the Alafia, Hillsborough, Kissimmee, Ocklawaha, Peace, and Withlacoochee Rivers. Furthermore, it acknowledges the critical importance of Polk County's aquifers to the economic and ecological health of the surrounding regions. The Act declared that fostering partnerships between Regional Water Supply Authorities (RWSA) and local governments is in the state's interest.

For the purposes of fostering such partnerships, the Act requires that the PRWC prepare annual comprehensive reports listing projects that are needed to protect and restore the region's water resources, so that they may be considered for state funding. These funds were awarded to PRWC (Grantee); the following entities will work in conjunction with the Grantee on this project: Polk City, City of Eagle Lake, City of Winter Haven, City of Frostproof, Polk County.

Project No. 1 PRWC West Polk Wellfield Lower Floridan Aquifer Project

PROJECT BACKGROUND: In order to meet growing water demands, the PRWC determined that multiple projects would be required to meet future demands. The West Polk project, which would utilize the deep, lower Floridan, brackish aquifer as a source, would serve as one project which could help meet demands in western Polk County. Use of the lower Floridan as a water supply is thought to be protective of the region's sensitive natural resources.

PROJECT DESCRIPTION: The Grantee will complete a well testing program and designs for a reverse osmosis treatment facility and associated piping to serve numerous communities in western Polk County. This Project includes acquisition of land for the testing and the construction of the raw water wellfield.

The Grantee does not anticipate that the funding under this Agreement will result in a fully completed project, so this Agreement will cover a portion of the work.

Project No. 2 Eagle Lake Wastewater Pump Station Replacement Project

PROJECT BACKGROUND: Lake McLeod and Eagle Lake exist within the Peace Creek Watershed, in which there is a TMDL for fecal coliform. The City of Eagle Lake plans to replace two wastewater pumping stations to prevent failures which have the potential to overflow sewage into the lakes.

PROJECT DESCRIPTION: The Grantee will complete the construction plan revision, bid document revisions, bidding and contractor selection, and the construction of two wastewater pumping stations and installation of emergency generators to replace aging existing pumping stations, one located at a park near Eagle Lake and one located in a low elevation area adjacent to Lake McLeod.

Project No. 3 Winter Haven Septic to Sewer Program.

PROJECT BACKGROUND: Nearly half of the 50 lakes in Winter Haven are on the impaired list for water quality due in part to septic tank loading. The City of Winter Haven serves a population of approximately 74,675, which includes 14,070 residences that are on septic systems. This project will design, permit and construct the first remediation area from the priority list identified in the Septic to Sewer Master Plan completed in January 2021. The Septic to Sewer Master Plan prioritizes and will subsequently eliminate some of the septic tank discharges by converting septic tanks to central sewer in a very high recharge area. The City of Winter Haven has completed a Septic to Sewer Master Plan in January 2021 which recommends priority areas for the conversion to sewer.

PROJECT DESCRIPTION: The Grantee will complete the design, permitting, and bidding services for a new public collection system, as well as on-site private septic system evaluations, connections to the new collection system, and septic tank decommisioning for approximately 125 residential and commercial accounts around East Lake Hartridge and US 17. They will also complete the construction of the collection system within the right-of-way in Remediation Area 6A and Boggy Bottom Area.

The Grantee does not anticipate that the funding under this Agreement will result in a fully completed project, so this Agreement will cover a portion of the work.

Project No. 4 Frostproof Wastewater System Upgrades.

PROJECT BACKGROUND: The City of Frostproof has prepared 90% design plans and technical specifications for the planned construction of a pretreatment/headworks system at its wastewater treatment plant. The City is also in the process of designing the expansion of its rapid infiltration basin (RIB) system for effluent disposal.

PROJECT DESCRIPTION: The Grantee will complete the design and construction of all components for the headworks, including the control panel, screen, compactor, grit system, stairs/walkway sensor, delivery, startup, training, permitting, and construction administration, as well as the design and construction of a rapud infiltration basin expansion and emergency generators for the lift station.

The Grantee does not anticipate that the funding under this Agreement will result in a fully completed project, so this Agreement will cover a portion of the work.

Project No. 5 Winter Haven ASR Wellfield

PROJECT BACKGROUND: The Winter Haven area is the headwaters for the Peace River which flows to Charlotte Harbor. This project is part of a larger One Water Master Plan to create green infrastructure projects, which provide water supply, water quality, flooding and natural system restoration. This project involves the design and construction of an aquifer storage and recovery (ASR) wellfield which would take excess surface water flow during flood events, store it in the lower Floridan aquifer, and then recover the water during drought events.

PROJECT DESCRIPTION: The Grantee will complete the design and construction of a roughly 1.5 MGD ASR well system to store excess water from the Peace Creek System for beneficial use, including a report on the Flow and Water Quality Data Summary and Analysis of available water sources and quantities and characterize water quality to determine treatment requirements, local hydrogeology, area features, and regulatory reviews, and well options screening evaluations.

The Grantee does not anticipate that the funding under this Agreement will result in a fully completed project, so this Agreement will cover a portion of the work.

Project No. 6 Polk County AWS Receiving Facilities

PROJECT BACKGROUND: Polk County is a member of the PRWC and will receive regional alternative water supplies from the PRWC via the Southeast Wellfield Project. Polk County must design and construct a receiving station to facilitate the re-pumping to an AWS system in its Northeast Regional Utility Service Area (NERUSA)

PROJECT DESCRIPTION: The Grantee will complete the design of an alternative water supply storage and repump facility. The station will include an approximately 1 MGD storage tank, pumps, chemical feed, electrical equipment, generator, and associated equipment. This project includes land acquisition, designs, and permitting for the new facility.

The Grantee does not anticipate that the funding under this Agreement will result in a fully completed project, so this Agreement will cover a portion of the work.

TASKS:

All documentation will be submitted electronically unless otherwise indicated.

Task 1: Land Acquisition

Deliverables: The Grantee will acquire fee simple or less-than-fee simple interest on properties within the service areas of the PRWC. Costs related to pre-acquisition and acquisition will be reimbursable. the property interests will be held by Polk County, to be transferred by the Grantee after the acquisition is complete. The Grantee will complete the following:

- Project 1: Property acquisition of the raw water wells and pipeline for a 2.5 MGD facility.
- Project 6: Land acquisition for an alternative water supply storage and repump facility.

Documentation: The Grantee will submit: 1) copies of all appraisals; 2) the closing statement or all closing documents; 3) title exam/insurance; 4) property survey; 5) boundary map; and 6) the deed, recorded easement, or property interest.

Performance Standard: The Department's Grant Manager will review the documentation to verify that the deliverables have been completed as described above. Upon review and written acceptance by the Department's Grant Manager, the Grantee may proceed with payment request submittal.

Payment Request Schedule: The Grantee may submit a payment request for cost reimbursement at the conclusion of the task.

Task 2: Pre-construction Activities

Deliverables: The Grantee will complete the following:

- Project 2: Design of the Eagle Lake wastewater pumping station and FDEP permit renewal.
- Project 3: Design of the Winter Haven Area 6A and Boggy Bottom Area public collection system.
- Project 4: Design of an expansion of Frostproof's rapid infiltration basin (RIB) system for effluent disposal.
- Project 5: Evaluation of the flow and water quality characteristics for the Winter Haven ASR wellfield.

- Project 6: Preliminary design report and design of the Polk County AWS receiving facilities.

Documentation: The Grantee will submit:1) a signed acceptance of the completed work to date, as provided in the Grantee's Certification of Payment Request; and 2) a summary of design (or preconstruction) activities to date, indicating the percentage of design completion for the time period covered in the payment request. For the final documentation, the Grantee will also submit a copy of the design completed with the funding provided for this task and a list of all required permits identifying issue dates and issuing authorities. The Grantee will also submit the following:

- Project 2: Construction plans and renewed permit for the Eagle Lake wastewater pumping station.
- Project 3: Construction plans for the 6A and Boggy Bottom Area public collection system.
- Project 4: Construction plans for a pretreatment/headworks system.
- Project 5: Draft and final summary memoranda of the flow and water quality characteristics, local hydrogeology, and well options; Class V well construction permit application.
- Project 6: Preliminary design report, 60% design documents, 90% design documents for the Polk County AWS receiving facilities.

Performance Standard: The Department's Grant Manager will review the documentation to verify that the deliverables have been completed as described above. Upon review and written acceptance by the Department's Grant Manager, the Grantee may proceed with payment request submittal.

Payment Request Schedule: The Grantee may submit a payment request for cost reimbursement following the conclusion of the task.

Task 3: Bidding and Contractor Selection

Deliverables: The Grantee will complete the following:

- Project 2: Bidding documents for the Eagle Lake wastewater pump station.
- Project 4: City of Frostproof bidding documents for the headworks and RIB improvements.
- Project 6: Polk County AWS receiving facility bid documents.

Documentation: The Grantee will submit: 1) the public notice of advertisement for the bid; 2) the bid package; and 3) a written notice of selected contractor(s).

Performance Standard: The Department's Grant Manager will review the documentation to verify that the deliverables have been completed as described above. Upon review and written acceptance by the Department's Grant Manager, the Grantee may proceed with payment request submittal.

Payment Request Schedule: The Grantee may submit a payment request for cost reimbursement no more frequently than monthly.

Task 4: Construction

Deliverables: The Grantee will construct the following items in accordance with the construction contract documents.

- Project 2: City of Eagle Lake wastewater pumping station.
- Project 3: City of Winter Haven sewer collection system.
- Project 4: City of Frostproof headworks and RIB improvements.
- Project 5: City of Winter Haven ASR well construction.

Documentation: The Grantee will submit a signed acceptance of the completed work to date by the Grantee and the Engineer's Certification of Payment Request.

Performance Standard: The Department's Grant Manager will review the documentation to verify that the deliverables are completed as described above. Upon review and written acceptance by the Department's Grant Manager, the Grantee may proceed with payment request submittal.

PROJECT TIMELINE & BUDGET DETAIL: The tasks must be completed by, and all documentation received by, the corresponding task end date.

Task No.	Task Title	Budget Category	Budget Amount	Task Start Date	Task End Date
1	Land Acquisition	Land Acquisition	$1,477,557	07/01/2021	6/30/2023
			$122,052*	07/01/2019	6/30/2023
2	Pre-construction Activities	Contractual Services	$730,268	07/01/2021	6/30/2023
3	Bidding and Contractor Selection	Contractual Services	$400,000	07/01/2021	6/30/2023
4	Construction	Contractual Services	$4,392,175	07/01/2021	6/30/2023
		Total:	$7,122,052		

*$122,052 of funding provided under Line Item 1657A of the FY19-20 General Appropriations Act will go toward Land Acquisition for Project 1

STATE OF FLORIDA
DEPARTMENT OF ENVIRONMENTAL PROTECTION
Public Records Requirements

Attachment 4

1. **Public Records.**

a. If the Agreement exceeds $35,000.00, and if Grantee is acting on behalf of Department in its performance of services under the Agreement, Grantee must allow public access to all documents, papers, letters, or other material, regardless of the physical form, characteristics, or means of transmission, made or received by Grantee in conjunction with the Agreement (Public Records), unless the Public Records are exempt from section 24(a) of Article I of the Florida Constitution or section 119.07(1), F.S.

b. The Department may unilaterally terminate the Agreement if Grantee refuses to allow public access to Public Records as required by law.

2. **Additional Public Records Duties of Section 119.0701, F.S., If Applicable.**
For the purposes of this paragraph, the term "contract" means the "Agreement." If Grantee is a "contractor" as defined in section 119.0701(1)(a), F.S., the following provisions apply and the contractor shall:

a. Keep and maintain Public Records required by Department to perform the service.

b. Upon request, provide Department with a copy of requested Public Records or allow the Public Records to be inspected or copied within a reasonable time at a cost that does not exceed the cost provided in Chapter 119, F.S., or as otherwise provided by law.

c. A contractor who fails to provide the Public Records to Department within a reasonable time may be subject to penalties under section 119.10, F.S.

d. Ensure that Public Records that are exempt or confidential and exempt from Public Records disclosure requirements are not disclosed except as authorized by law for the duration of the contract term and following completion of the contract if the contractor does not transfer the Public Records to Department.

e. Upon completion of the contract, transfer, at no cost, to Department all Public Records in possession of the contractor or keep and maintain Public Records required by Department to perform the service. If the contractor transfers all Public Records to Department upon completion of the contract, the contractor shall destroy any duplicate Public Records that are exempt or confidential and exempt from Public Records disclosure requirements. If the contractor keeps and maintains Public Records upon completion of the contract, the contractor shall meet all applicable requirements for retaining Public Records. All Public Records stored electronically must be provided to Department, upon request from Department's custodian of Public Records, in a format specified by Department as compatible with the information technology systems of Department. These formatting requirements are satisfied by using the data formats as authorized in the contract or Microsoft Word, Outlook, Adobe, or Excel, and any software formats the contractor is authorized to access.

f. **IF THE CONTRACTOR HAS QUESTIONS REGARDING THE APPLICATION OF CHAPTER 119, F.S., TO THE CONTRACTOR'S DUTY TO PROVIDE PUBLIC RECORDS RELATING TO THE CONTRACT, CONTACT THE DEPARTMENT'S CUSTODIAN OF PUBLIC RECORDS AT:**

Telephone: **(850) 245-2118**
Email: public.services@floridadep.gov
Mailing Address: **Department of Environmental Protection**
ATTN: Office of Ombudsman and Public Services
Public Records Request
3900 Commonwealth Boulevard, MS 49
Tallahassee, Florida 32399

STATE OF FLORIDA
DEPARTMENT OF ENVIRONMENTAL PROTECTION
Special Audit Requirements
(State and Federal Financial Assistance)

Attachment 5

The administration of resources awarded by the Department of Environmental Protection *(which may be referred to as the "Department", "DEP", "FDEP" or "Grantor", or other name in the agreement)* to the recipient *(which may be referred to as the "Recipient", "Grantee" or other name in the agreement)* may be subject to audits and/or monitoring by the Department of Environmental Protection, as described in this attachment.

MONITORING

In addition to reviews of audits conducted in accordance with 2 CFR Part 200, Subpart F-Audit Requirements, and Section 215.97, F.S., as revised (see "AUDITS" below), monitoring procedures may include, but not be limited to, on-site visits by DEP Department staff, limited scope audits as defined by 2 CFR 200.425, or other procedures. By entering into this Agreement, the recipient agrees to comply and cooperate with any monitoring procedures/processes deemed appropriate by the Department of Environmental Protection. In the event the Department of Environmental Protection determines that a limited scope audit of the recipient is appropriate, the recipient agrees to comply with any additional instructions provided by the Department to the recipient regarding such audit. The recipient further agrees to comply and cooperate with any inspections, reviews, investigations, or audits deemed necessary by the Chief Financial Officer (CFO) or Auditor General.

AUDITS

PART I: FEDERALLY FUNDED

This part is applicable if the recipient is a State or local government or a non-profit organization as defined in 2 CFR §200.330

1. A recipient that expends $750,000 or more in Federal awards in its fiscal year, must have a single or program-specific audit conducted in accordance with the provisions of 2 CFR Part 200, Subpart F. EXHIBIT 1 to this Attachment indicates Federal funds awarded through the Department of Environmental Protection by this Agreement. In determining the federal awards expended in its fiscal year, the recipient shall consider all sources of federal awards, including federal resources received from the Department of Environmental Protection. The determination of amounts of federal awards expended should be in accordance with the guidelines established in 2 CFR 200.502-503. An audit of the recipient conducted by the Auditor General in accordance with the provisions of 2 CFR Part 200.514 will meet the requirements of this part.

2. For the audit requirements addressed in Part I, paragraph 1, the recipient shall fulfill the requirements relative to auditee responsibilities as provided in 2 CFR 200.508-512.

3. A recipient that expends less than $750,000 in federal awards in its fiscal year is not required to have an audit conducted in accordance with the provisions of 2 CFR Part 200, Subpart F-Audit Requirements. If the recipient expends less than $750,000 in federal awards in its fiscal year and elects to have an audit conducted in accordance with the provisions of 2 CFR 200, Subpart F-Audit Requirements, the cost of the audit must be paid from non-federal resources (i.e., the cost of such an audit must be paid from recipient resources obtained from other federal entities.

4. The recipient may access information regarding the Catalog of Federal Domestic Assistance (CFDA) via the internet at www.cfda.gov

PART II: STATE FUNDED

This part is applicable if the recipient is a nonstate entity as defined by Section 215.97(2), Florida Statutes.

1. In the event that the recipient expends a total amount of state financial assistance equal to or in excess of $750,000 in any fiscal year of such recipient (for fiscal years ending June 30, 2017, and thereafter), the recipient must have a State single or project-specific audit for such fiscal year in accordance with Section 215.97, F.S.; Rule Chapter 69I-5, F.A.C., State Financial Assistance; and Chapters 10.550 (local governmental entities) or 10.650 (nonprofit and for-profit organizations), Rules of the Auditor General. EXHIBIT 1 to this form lists the state financial assistance awarded through the Department of Environmental Protection by this agreement. In determining the state financial assistance expended in its fiscal year, the recipient shall consider all sources of state financial assistance, including state financial assistance received from the Department of Environmental Protection, other state agencies, and other nonstate entities. State financial assistance does not include federal direct or pass-through awards and resources received by a nonstate entity for Federal program matching requirements.

2. In connection with the audit requirements addressed in Part II, paragraph 1; the recipient shall ensure that the audit complies with the requirements of Section 215.97(8), Florida Statutes. This includes submission of a financial reporting package as defined by Section 215.97(2), Florida Statutes, and Chapters 10.550 (local governmental entities) or 10.650 (nonprofit and for-profit organizations), Rules of the Auditor General.

3. If the recipient expends less than $750,000 in state financial assistance in its fiscal year (for fiscal year ending June 30, 2017, and thereafter), an audit conducted in accordance with the provisions of Section 215.97, Florida Statutes, is not required. In the event that the recipient expends less than $750,000 in state financial assistance in its fiscal year, and elects to have an audit conducted in accordance with the provisions of Section 215.97, Florida Statutes, the cost of the audit must be paid from the non-state entity's resources (i.e., the cost of such an audit must be paid from the recipient's resources obtained from other than State entities).

4. For information regarding the Florida Catalog of State Financial Assistance (CSFA), a recipient should access the Florida Single Audit Act website located at https://apps.fldfs.com/fsaa for assistance. In addition to the above websites, the following websites may be accessed for information: Legislature's Website at http://www.leg.state.fl.us/Welcome/index.cfm, State of Florida's website at http://www.myflorida.com/, Department of Financial Services' Website at http://www.fldfs.com/and the Auditor General's Website at http://www.myflorida.com/audgen/.

PART III: OTHER AUDIT REQUIREMENTS

(NOTE: This part would be used to specify any additional audit requirements imposed by the State awarding entity that are solely a matter of that State awarding entity's policy (i.e., the audit is not required by Federal or State laws and is not in conflict with other Federal or State audit requirements). Pursuant to Section 215.97(8), Florida Statutes, State agencies may conduct or arrange for audits of State financial assistance that are in addition to audits conducted in accordance with Section 215.97, Florida Statutes. In such an event, the State awarding agency must arrange for funding the full cost of such additional audits.)

PART IV: REPORT SUBMISSION

1. Copies of reporting packages for audits conducted in accordance with 2 CFR Part 200, Subpart F-Audit Requirements, and required by PART I of this form shall be submitted, when required by 2 CFR 200.512, by or on behalf of the recipient directly to the Federal Audit Clearinghouse (FAC) as provided in 2 CFR 200.36 and 200.512

   A. The Federal Audit Clearinghouse designated in 2 CFR §200.501(a) (the number of copies required by 2 CFR §200.501(a) should be submitted to the Federal Audit Clearinghouse), at the following address:

By Mail:

Federal Audit Clearinghouse
Bureau of the Census
1201 East 10th Street
Jeffersonville, IN 47132

Submissions of the Single Audit reporting package for fiscal periods ending on or after January 1, 2008, must be submitted using the Federal Clearinghouse's Internet Data Entry System which can be found at http://harvester.census.gov/facweb/

2. Copies of financial reporting packages required by PART II of this Attachment shall be submitted by or on behalf of the recipient directly to each of the following:

A. The Department of Environmental Protection at one of the following addresses:

By Mail:
Audit Director
Florida Department of Environmental Protection
Office of Inspector General, MS 40
3900 Commonwealth Boulevard
Tallahassee, Florida 32399-3000

Electronically:
FDEPSingleAudit@dep.state.fl.us

B. The Auditor General's Office at the following address:

Auditor General
Local Government Audits/342
Claude Pepper Building, Room 401
111 West Madison Street
Tallahassee, Florida 32399-1450

The Auditor General's website (http://flauditor.gov/) provides instructions for filing an electronic copy of a financial reporting package.

3. Copies of reports or management letters required by PART III of this Attachment shall be submitted by or on behalf of the recipient directly to the Department of Environmental Protection at one of the following addresses:

By Mail:
Audit Director
Florida Department of Environmental Protection
Office of Inspector General, MS 40
3900 Commonwealth Boulevard
Tallahassee, Florida 32399-3000

Electronically:
FDEPSingleAudit@dep.state.fl.us

4. Any reports, management letters, or other information required to be submitted to the Department of Environmental Protection pursuant to this Agreement shall be submitted timely in accordance with 2 CFR 200.512, section 215.97, F.S., and Chapters 10.550 (local governmental entities) or 10.650 (nonprofit and for-profit organizations), Rules of the Auditor General, as applicable.

5. Recipients, when submitting financial reporting packages to the Department of Environmental Protection for audits done in accordance with 2 CFR 200, Subpart F-Audit Requirements, or Chapters 10.550 (local governmental entities) and 10.650 (non and for-profit organizations), Rules of the Auditor General, should indicate the date and the reporting package was delivered to the recipient correspondence accompanying the reporting package.

PART V: RECORD RETENTION

The recipient shall retain sufficient records demonstrating its compliance with the terms of the award and this Agreement for a period of **five (5)** years from the date the audit report is issued, and shall allow the Department of Environmental Protection, or its designee, Chief Financial Officer, or Auditor General access to such records upon request. The recipient shall ensure that audit working papers are made available to the Department of Environmental Protection, or its designee, Chief Financial Officer, or Auditor General upon request for a period of **three (3)** years from the date the audit report is issued, unless extended in writing by the Department of Environmental Protection.

EXHIBIT – 1

FUNDS AWARDED TO THE RECIPIENT PURSUANT TO THIS AGREEMENT CONSIST OF THE FOLLOWING:

Note: If the resources awarded to the recipient represent more than one federal program, provide the same information shown below for each federal program and show total federal resources awarded

Federal Resources Awarded to the Recipient Pursuant to this Agreement Consist of the Following:					
Federal Program A	Federal Agency	CFDA Number	CFDA Title	Funding Amount	State Appropriation Category
				$	
Federal Program B	Federal Agency	CFDA Number	CFDA Title	Funding Amount	State Appropriation Category
				$	

Note: Of the resources awarded to the recipient represent more than one federal program, list applicable compliance requirements for each federal program in the same manner as shown below:

Federal Program A	First Compliance requirement: i.e.: (what services of purposes resources must be used for)	
	Second Compliance requirement: i.e.:(eligibility requirement for recipients of the resources)	
	Etc.	
	Etc.	
Federal Program B	First Compliance requirement: i.e.: (what services of purposes resources must be used for)	
	Second Compliance requirement: i.e.: (eligibility requirement for recipients of the resources)	
	Etc.	
	Etc.	

Note: If the resources awarded to the recipient for matching represent more than one federal program, provide the same information shown below for each federal program and show total state resources awarded for matching.

State Resources Awarded to the Recipient Pursuant to this Agreement Consist of the Following Matching Resources for Federal Programs:					
Federal Program A	Federal Agency	CFDA	CFDA Title	Funding Amount	State Appropriation Category
Federal Program B	Federal Agency	CFDA	CFDA Title	Funding Amount	State Appropriation Category

Note: If the resources awarded to the recipient represent more than one state project, provide the same information shown below for each state project and show total state financial assistance awarded that is subject to section 215.97, F.S.

State Resources Awarded to the Recipient Pursuant to this Agreement Consist of the Following Resources Subject to Section 215.97, F.S.:						
State Program A	State Awarding Agency	State Fiscal Year[1]	CSFA Number	CSFA Title or Funding Source Description	Funding Amount	State Appropriation Category
Original	FDEP	2021-2022	37.039	Statewide Surface Restoration and Wastewater Projects	$7,000,000	140047
Original	FDEP	2019-2020	37.039	Statewide Surface Restoration and Wastewater Projects	$122,052	140047
State Program B	State Awarding Agency	State Fiscal Year[2]	CSFA Number	CSFA Title or Funding Source Description	Funding Amount	State Appropriation Category

Total Award	$7,122,052	

Note: List applicable compliance requirement in the same manner as illustrated above for federal resources. For matching resources provided by the Department for DEP for federal programs, the requirements might be similar to the requirements for the applicable federal programs. Also, to the extent that different requirements pertain to different amount for the non-federal resources, there may be more than one grouping (i.e. 1, 2, 3, etc.) listed under this category.

For each program identified above, the recipient shall comply with the program requirements described in the Catalog of Federal Domestic Assistance (CFDA) [www.cfda.gov] and/or the Florida Catalog of State Financial Assistance (CSFA) [https://apps.fldfs.com/fsaa/searchCatalog.aspx], and State Projects Compliance Supplement (Part Four: State Projects Compliance Supplement [https://apps.fldfs.com/fsaa/state_project_compliance.aspx]. The services/purposes for which the funds are to be used are included in the Agreement's Grant Work Plan. Any match required by the Recipient is clearly indicated in the Agreement.

[1] Subject to change by Change Order.
[2] Subject to change by Change Order.

STATE OF FLORIDA
DEPARTMENT OF ENVIRONMENTAL PROTECTION

Exhibit A
Progress Report Form

DEP Agreement No.:	LPA0212
Project Title:	Polk Regional Water Cooperative Heartland Headwaters Protection and Sustainability
Grantee Name:	Polk Regional Water Cooperative
Grantee's Grant Manager:	Charles Richards
Reporting Period:	Select reporting period. Select year.

Provide the following information for all tasks identified in the Grant Work Plan:
Summarize the work completed within each task for the reporting period. Provide an update on the estimated completion date for each task and an explanation for any anticipated delays or problems encountered. Add or remove task sections and use as many pages as necessary to cover all tasks. Use the format provided below.

Task 1: Preconstruction Activities (Land Acquisition)

- **Progress for this reporting period:** Add Text
- **Identify delays or problems encountered:** Add Text

Task 2: Preconstruction Activities

- **Progress for this reporting period:** Add Text
- **Identify delays or problems encountered:** Add Text

Task 3: Bidding and Contractor Selection

- **Progress for this reporting period:** Add Text
- **Identify delays or problems encountered:** Add Text

Task 4: Construction

- **Progress for this reporting period:** Add Text
- **Identify delays or problems encountered:** Add Text

Indicate the completion status for the following tasks (if included in the Grant Work Plan):

Design (Plans/Submittal): 30% ☐, 60% ☐, 90% ☐, 100% ☐

Permitting (Completed): Yes ☐, No ☐

Construction (Estimated): _____%

This report is submitted in accordance with the reporting requirements of the above DEP Agreement number and accurately reflects the activities associated with the project.

_____ _____

Signature of Grantee's Grant Manager (Original Ink) Date

STATE OF FLORIDA
DEPARTMENT OF ENVIRONMENTAL PROTECTION

Exhibit C
Payment Request Summary Form

The **Payment Request Summary Form** for this grant can be found on our website at this link:

https://floridadep.gov/wra/wra/documents/payment-request-summary-form

Please use the most current form found on the website, linked above, for each payment request.

AMENDMENT NO. 1
TO AGREEMENT NO. LPA0212
BETWEEN
FLORIDA DEPARTMENT OF ENVIRONMENTAL PROTECTION
AND
POLK REGIONAL WATER COOPERATIVE

This Amendment to Agreement No. LPA0212 (Agreement) is made by and between the Department of Environmental Protection (Department), an agency of the State of Florida, and the Polk Regional Water Cooperative (Grantee), on the date last signed below.

WHEREAS, the Department entered into the Agreement with the Grantee for Polk Regional Water Cooperative Heartland Headwaters Protection and Sustainability (Project), effective July 28, 2022; and,

WHEREAS, $6,983,936 in additional funding for this Project is provided under Line Item 1665A of the 2022-2023 General Appropriations Act; and the total funding for this Agreement is now $14,105,988; and,

WHEREAS, the reimbursement period for the additional funding provided under Line Item 1665A of the 2022-2023 General Appropriations Act begins on July 1, 2022; and,

WHEREAS, the Grantee has requested a reallocation of the project budget; and,

WHEREAS, the Grantee has requested a revision in the scope of work for the Project; and,

WHEREAS, the parties have agreed to add the Southeast Wellfield Lower Floridan Aquifer Project to the Agreement; and,

WHEREAS, an extension to the Agreement is needed to provide additional time to complete the Project; and,

WHEREAS, the parties have agreed to amend the Agreement as set forth herein.

NOW THEREFORE, the parties agree as follows:

1. Section 3. of the Standard Grant Agreement is hereby revised to change the Date of Expiration to December 31, 2024. The Department and the Grantee shall continue to perform their respective duties during this extension period pursuant to the same terms and conditions provided in the Agreement.

2. Section 5. of the Standard Grant Agreement is hereby revised to the following:

Total Amount of Funding:	**Funding Source?**	**Award #s or Line Item Appropriations:**	**Amount per Source(s):**
$14,105,988	☑ State ☐ Federal	LP, GAA LI 1657A, FY 19-20, GR	$122,052
	☑ State ☐ Federal	LP, GAA LI 1607A, FY 21-22, GR	$7,000,000
	☑ State ☐ Federal	LP, GAA LI 1665A, FY 22-23, GR	$6,983,936
	☐ Grantee Match		
		Total Amount of Funding + Grantee Match, if any:	$14,105,988

3. Section 4. of Attachment 2 is hereby revised to the following:

Reimbursement for costs or availability for costs to meet matching requirements shall be limited to the following budget categories, as defined in the Reference Guide for State Expenditures, as indicated:

Reimbursement	Match	Category
☐	☐	Salaries/Wages
		Overhead/Indirect/General and Administrative Costs:
☐	☐	a. Fringe Benefits, N/A.
☐	☐	b. Indirect Costs, N/A.
☒	☐	Contractual (Subcontractors)
☐	☐	Travel, in accordance with Section 112, F.S.
☐	☐	Equipment
☐	☐	Rental/Lease of Equipment
☒	☐	Miscellaneous/Other Expenses
☒	☐	Land Acquisition

4. Attachment 3, Grant Work Plan, is hereby deleted in its entirety and replaced with Attachment 3-1, Revised Grant Work Plan, as attached to this Amendment and hereby incorporated into the Agreement. All references in the Agreement to Attachment 3 shall hereinafter refer to Attachment 3-1, Revised Grant Work Plan.

5. Attachment 5, Special Audit Requirements, is hereby deleted in its entirety and replaced with Attachment 5-1, Revised Special Audit Requirements, attached hereto and made a part of the Agreement. All references in the Agreement to Attachment 5 shall hereinafter refer to Attachment 5-1, Revised Special Audit Requirements.

6. All other terms and conditions of the Agreement remain in effect. If and to the extent that any inconsistency may appear between the Agreement and this Amendment, the provisions of this Amendment shall control.

The parties agree to the terms and conditions of this Amendment and have duly authorized their respective representatives to sign it on the dates indicated below.

POLK REGIONAL WATER COOPERATIVE

By: _____
Authorized Signature

Eric DeHaven, Executive Director
Print Name and Title

Date: 3/22/2023

STATE OF FLORIDA DEPARTMENT OF ENVIRONMENTAL PROTECTION

By: Angela Knecht Digitally signed by Angela Knecht Date: 2023.03.24 12:15:49 -04'00'
Secretary or Designee

Angela Knecht, Division Director
Print Name and Title

Date: _____

Gabby Vega-Molnar Digitally signed by Gabby Vega-Molnar Date: 2023.03.24 10:30:08 -04'00'
Gabby Vega-Molnar, DEP Grant Manager

Zach Easton Digitally signed by Zach Easton Date: 2023.03.24 12:08:26 -04'00'
Zach Easton, DEP QC Reviewer

List of attachments/exhibits included as part of this Amendment:

Specify Type	Letter/ Number	Description
Attachment	3-1	Revised Grant Work Plan
Attachment	5-1	Revised Special Audit Requirements

ATTACHMENT 3-1
REVISED GRANT WORK PLAN

PROJECT TITLE: Polk Regional Water Cooperative Heartland Headwaters Protection and Sustainability

PROJECT LOCATION: The Project will be located within the service areas of the Polk Regional Water Cooperative (PRWC) (Grantee). The PRWC is made up of Polk County and 15 municipalities. The County seat is located in Bartow, Florida; with an approximate Lat/Long of 27.8940, -81.8512.

PROJECT BACKGROUND: In 2017, the Florida Legislature passed HB 573, better known as the Heartland Headwaters Protection and Sustainability Act (Chapter No. 2017-111, Laws of Florida). The Act statutorily recognizes the vital importance of those portions of the Green Swamp Area of Critical State Concern that lie within the jurisdictional bounds of Polk and Lake counties and designates Polk County's aquifers as the headwaters for six of Florida's major rivers: the Alafia, Hillsborough, Kissimmee, Ocklawaha, Peace, and Withlacoochee Rivers. Furthermore, it acknowledges the critical importance of Polk County's aquifers to the economic and ecological health of the surrounding regions. The Act declared that fostering partnerships between Regional Water Supply Authorities (RWSA) and local governments is in the state's interest.

For the purposes of fostering such partnerships, the Act requires that the PRWC prepare annual comprehensive reports listing projects that are needed to protect and restore the region's water resources, so that they may be considered for state funding. These funds were awarded to PRWC (Grantee); the following entities will work in conjunction with the Grantee on this project: Polk City, City of Eagle Lake, City of Winter Haven, City of Frostproof, Polk County.

Project No. 1 - PRWC West Polk Wellfield Lower Floridan Aquifer Project

PROJECT BACKGROUND: In order to meet growing water demands, the PRWC determined that multiple projects would be required to meet future demands. The West Polk project, which would utilize the deep, lower Floridan, brackish aquifer as a source, would serve as one project which could help meet demands in western Polk County. Use of the lower Floridan as a water supply is thought to be protective of the region's sensitive natural resources.

PROJECT DESCRIPTION: The Grantee will complete a well testing program and designs for a reverse osmosis treatment facility and associated piping to serve numerous communities in western Polk County. This Project includes acquisition of land for the testing and the construction of the raw water wellfield. This project also includes acquisition of land for the water production facility, injection wells, and pipeline alignments. Legal fees may also be incurred as a part of this process.

The Grantee does not anticipate that the funding under this Agreement will result in a fully completed project, so this Agreement will cover a portion of the work.

Project No. 2 Eagle Lake Wastewater Pump Station Replacement Project

PROJECT BACKGROUND: Lake McLeod and Eagle Lake exist within the Peace Creek Watershed, in which there is a TMDL for fecal coliform. The City of Eagle Lake plans to replace two wastewater pumping stations to prevent failures which have the potential to overflow sewage into the lakes.

PROJECT DESCRIPTION: The Grantee will complete the construction plan revision, bid document revisions, bidding and contractor selection, and the construction of two wastewater pumping stations and installation of emergency generators to replace aging existing pumping stations, one located at a park near Eagle Lake and one located in a low elevation area adjacent to Lake McLeod.

Project No. 3 - Winter Haven Septic to Sewer Program

PROJECT BACKGROUND: Nearly half of the 50 lakes in Winter Haven are on the impaired list for water quality due in part to septic tank loading. The City of Winter Haven serves a population of approximately 74,675, which includes 14,070 residences that are on septic systems. This project will design, permit and construct the first remediation area from the priority list identified in the Septic to Sewer Master Plan completed in January 2021. The Septic to Sewer Master Plan prioritizes and will subsequently eliminate some of the septic tank discharges by converting septic tanks to central sewer in a very high recharge area. The City of Winter Haven has completed a Septic to Sewer Master Plan in January 2021 which recommends priority areas for the conversion to sewer.

PROJECT DESCRIPTION: The Grantee will complete the design, permitting, and bidding services for a new public collection system, as well as on-site private septic system evaluations, connections to the new collection system, and septic tank decommissioning for approximately 125 residential and commercial accounts around East Lake Hartridge and US 17. They will also complete the construction of the collection system within the right-of-way in Remediation Area 6A and Boggy Bottom Area.

The Grantee does not anticipate that the funding under this Agreement will result in a fully completed project, so this Agreement will cover a portion of the work.

Project No. 4 - Frostproof Wastewater System Upgrades

PROJECT BACKGROUND: The City of Frostproof has prepared 90% design plans and technical specifications for the planned construction of a pretreatment/headworks system at its wastewater treatment plant. The City is also in the process of designing the expansion of its rapid infiltration basin (RIB) system for effluent disposal.

PROJECT DESCRIPTION: The Grantee will complete the design and construction of all components for the headworks, including the control panel, screen, compactor, grit system, stairs/walkway sensor, delivery, startup, training, permitting, and construction administration, as well as the design and construction of a rapid infiltration basin expansion and emergency generators for the lift station.

The Grantee does not anticipate that the funding under this Agreement will result in a fully completed project, so this Agreement will cover a portion of the work.

Project No. 5 - Winter Haven ASR Wellfield

PROJECT BACKGROUND: The Winter Haven area is the headwaters for the Peace River which flows to Charlotte Harbor. This project is part of a larger One Water Master Plan to create green infrastructure projects, which provide water supply, water quality, flooding and natural system restoration. This project involves the design and construction of an aquifer storage and recovery (ASR) wellfield which would take excess surface water flow during flood events, store it in the lower Floridan aquifer, and then recover the water during drought events.

PROJECT DESCRIPTION: The Grantee will complete the design and construction of a roughly 1.5 MGD ASR well system to store excess water from the Peace Creek System for beneficial use, including a report on the Flow and Water Quality Data Summary and Analysis of available water sources and quantities and characterize water quality to determine treatment requirements, local hydrogeology, area features, and regulatory reviews, and well options screening evaluations.

The Grantee does not anticipate that the funding under this Agreement will result in a fully completed project, so this Agreement will cover a portion of the work.

Project No. 6 - Polk County AWS Receiving Facilities

PROJECT BACKGROUND: Polk County is a member of the PRWC and will receive regional alternative water supplies from the PRWC via the Southeast Wellfield Project. Polk County must design and construct a receiving station to facilitate the re-pumping to an AWS system in its Northeast Regional Utility Service Area (NERUSA).

PROJECT DESCRIPTION: The Grantee will complete the design of an alternative water supply storage and repump facility. The station will include an approximately 1 MGD storage tank, pumps, chemical feed, electrical equipment, generator, and associated equipment. This project includes land acquisition, designs, and permitting for the new facility.

The Grantee does not anticipate that the funding under this Agreement will result in a fully completed project, so this Agreement will cover a portion of the work.

Project No. 7 - Southeast Wellfield Lower Floridian Aquifer Project

PROJECT BACKGROUND: The Polk Regional Water Cooperative (PRWC) exists within the Central Florida Water Initiative area, a region of Florida identified as being limited in traditional water supply. This project is intended to help meet growing demands by utilizing the deep, lower Floridan, brackish aquifer as a source. Use of the lower Floridan as a water supply is thought to be protective of the region's sensitive natural resources.

PROJECT DESCRIPTION: The Grantee will acquire property or right of way for a 15 MGD reverse osmosis treatment facility, approximately 66 miles of transmission piping, and approximately 10 miles of raw water main and associated raw water wells. Legal fees may also be incurred as a part of this process.

TASKS: All documentation will be submitted electronically unless otherwise indicated.

Task 1: Land Acquisition

Deliverables: The Grantee will acquire fee simple or less-than-fee simple interest on properties within the service areas of the PRWC. Costs related to pre-acquisition and acquisition will be reimbursable. the property interests will be held by Polk County, to be transferred by the Grantee after the acquisition is complete. The Grantee will complete the following:

- Project 1: Land acquisition of the raw water wells, wastewater plant, and pipeline for a 2.5 MGD facility.
- Project 6: Land acquisition for an alternative water supply storage and repump facility.
- Project 7: Land acquisition for a wastewater treatment facility, pipeline, and raw water wells for a 15 MGD facility.

Documentation: The Grantee will submit: 1) copies of all appraisals; 2) the closing statement or all closing documents; 3) title exam/insurance; 4) property survey; 5) boundary map; and 6) the deed, recorded easement, or property interest, as applicable.

Performance Standard: The Department's Grant Manager will review the documentation to verify that the deliverables have been completed as described above. Upon review and written acceptance by the Department's Grant Manager, the Grantee may proceed with payment request submittal.

Payment Request Schedule: The Grantee may submit a payment request for cost reimbursement at the conclusion of the task.

Task 2: Preconstruction Activities

Deliverables: The Grantee will complete the following:

- Project 2: Design of the Eagle Lake wastewater pumping station and FDEP permit renewal.
- Project 3: Design of the Winter Haven Area 6A and Boggy Bottom Area public collection system.
- Project 4: Design of an expansion of Frostproof's rapid infiltration basin (RIB) system for effluent disposal.
- Project 5: Evaluation of the flow and water quality characteristics for the Winter Haven ASR wellfield.
- Project 6: Preliminary design report and design of the Polk County AWS receiving facilities.

Documentation: The Grantee will submit:1) a signed acceptance of the completed work to date, as provided in the Grantee's Certification of Payment Request; and 2) a summary of preconstruction activities to date, indicating the percentage of design completion for the time period covered in the payment request. For the final documentation, the Grantee will also submit a copy of the design completed with the funding provided for this task and a list of all required permits identifying issue dates and issuing authorities. The Grantee will also submit the following:

- Project 2: Construction plans and renewed permit for the Eagle Lake wastewater pumping station.
- Project 3: Construction plans for the 6A and Boggy Bottom Area public collection system.
- Project 4: Construction plans for a pretreatment/headworks system.
- Project 5: Draft and final summary memoranda of the flow and water quality characteristics, local hydrogeology, and well options; Class V well construction permit application.
- Project 6: Preliminary design report, 60% design documents, 90% design documents for the Polk County AWS receiving facilities.

Performance Standard: The Department's Grant Manager will review the documentation to verify that the deliverables have been completed as described above. Upon review and written acceptance by the Department's Grant Manager, the Grantee may proceed with payment request submittal.

Payment Request Schedule: The Grantee may submit a payment request for cost reimbursement following the conclusion of the task.

Task 3: Bidding and Contractor Selection

Deliverables: The Grantee will complete the following:

- Project 2: Bidding documents for the Eagle Lake wastewater pump station.
- Project 4: City of Frostproof bidding documents for the headworks and RIB improvements.
- Project 6: Polk County AWS receiving facility bid documents.

Documentation: The Grantee will submit: 1) the public notice of advertisement for the bid; 2) the bid package; and 3) a written notice of selected contractor(s).

Performance Standard: The Department's Grant Manager will review the documentation to verify that the deliverables have been completed as described above. Upon review and written acceptance by the Department's Grant Manager, the Grantee may proceed with payment request submittal.

Payment Request Schedule: The Grantee may submit a payment request for cost reimbursement no more frequently than monthly.

Task 4: Construction

Deliverables: The Grantee will construct the following items in accordance with the construction contract documents.

- Project 2: City of Eagle Lake wastewater pumping station.
- Project 3: City of Winter Haven sewer collection system.
- Project 4: City of Frostproof headworks and RIB improvements.
- Project 5: City of Winter Haven ASR well construction.

Documentation: The Grantee will submit 1) a copy of the final design; 2) a signed acceptance of the completed work to date, as provided in the Grantee's Certification of Payment Request; and 3) a signed Engineer's Certification of Payment Request.

Performance Standard: The Department's Grant Manager will review the documentation to verify that the deliverables have been completed as described above. Upon review and written acceptance by the Department's Grant Manager, the Grantee may proceed with payment request submittal.

Payment Request Schedule: The Grantee may submit a payment request for cost reimbursement no more frequently than monthly.

PROJECT TIMELINE & BUDGET DETAIL: The tasks must be completed by, and all documentation received by, the corresponding task end date. Cost reimbursable grant funding must not exceed the budget amounts as indicated below.

Task No.	Task Title	Budget Category	Grant Amount	Task Start Date	Task End Date
1	Land Acquisition	Land Acquisition	$122,052 [1]	07/01/2019	06/30/2024
			$1,477,557	07/01/2021	06/30/2024
			$6,983,936	07/01/2022	06/30/2024
2	Preconstruction Activities	Contractual Services	$730,268	07/01/2021	06/30/2024
3	Bidding and Contractor Selection	Contractual Services	$400,000	07/01/2021	06/30/2024
4	Construction	Contractual Services	$4,227,175	07/01/2021	06/30/2024
		Miscellaneous/ Other Expenses	$165,000	07/01/2021	06/30/2024
		Total:	$14,105,988		

[1]$122,052 of funding provided under Line Item 1657A of the FY19-20 General Appropriations Act will go toward Land Acquisition for Project 1. The remaining funding in this Task may go toward Land Acquisition for Projects 1, 6, or 7.

Note that, per Section 8.h. of Attachment 1 in the Agreement, authorization for continuation and completion of work and any associated payments may be rescinded, with proper notice, at the discretion of the Department if the Legislature reduces or eliminates appropriations. Extending the contract end date carries the risk that funds for this project may become unavailable in the future. This should be a consideration for the Grantee with this and future requests for extension.

STATE OF FLORIDA
DEPARTMENT OF ENVIRONMENTAL PROTECTION
Revised Special Audit Requirements
(State and Federal Financial Assistance)

Attachment 5-1

The administration of resources awarded by the Department of Environmental Protection *(which may be referred to as the "Department", "DEP", "FDEP" or "Grantor", or other name in the agreement*) to the recipient *(which may be referred to as the "Recipient", "Grantee" or other name in the agreement)* may be subject to audits and/or monitoring by the Department of Environmental Protection, as described in this attachment.

MONITORING

In addition to reviews of audits conducted in accordance with 2 CFR Part 200, Subpart F-Audit Requirements, and Section 215.97, F.S., as revised (see "AUDITS" below), monitoring procedures may include, but not be limited to, on-site visits by DEP Department staff, limited scope audits as defined by 2 CFR 200.425, or other procedures. By entering into this Agreement, the recipient agrees to comply and cooperate with any monitoring procedures/processes deemed appropriate by the Department of Environmental Protection. In the event the Department of Environmental Protection determines that a limited scope audit of the recipient is appropriate, the recipient agrees to comply with any additional instructions provided by the Department to the recipient regarding such audit. The recipient further agrees to comply and cooperate with any inspections, reviews, investigations, or audits deemed necessary by the Chief Financial Officer (CFO) or Auditor General.

AUDITS

PART I: FEDERALLY FUNDED

This part is applicable if the recipient is a State or local government or a non-profit organization as defined in 2 CFR §200.330

1. A recipient that expends $750,000 or more in Federal awards in its fiscal year, must have a single or program-specific audit conducted in accordance with the provisions of 2 CFR Part 200, Subpart F. EXHIBIT 1 to this Attachment indicates Federal funds awarded through the Department of Environmental Protection by this Agreement. In determining the federal awards expended in its fiscal year, the recipient shall consider all sources of federal awards, including federal resources received from the Department of Environmental Protection. The determination of amounts of federal awards expended should be in accordance with the guidelines established in 2 CFR 200.502-503. An audit of the recipient conducted by the Auditor General in accordance with the provisions of 2 CFR Part 200.514 will meet the requirements of this part.

2. For the audit requirements addressed in Part I, paragraph 1, the recipient shall fulfill the requirements relative to auditee responsibilities as provided in 2 CFR 200.508-512.

3. A recipient that expends less than $750,000 in federal awards in its fiscal year is not required to have an audit conducted in accordance with the provisions of 2 CFR Part 200, Subpart F-Audit Requirements. If the recipient expends less than $750,000 in federal awards in its fiscal year and elects to have an audit conducted in accordance with the provisions of 2 CFR 200, Subpart F-Audit Requirements, the cost of the audit must be paid from non-federal resources (i.e., the cost of such an audit must be paid from recipient resources obtained from other federal entities.

4. The recipient may access information regarding the Catalog of Federal Domestic Assistance (CFDA) via the internet at https://sam.gov/content/assistance-listings.

PART II: STATE FUNDED

This part is applicable if the recipient is a nonstate entity as defined by Section 215.97(2), Florida Statutes.

1. In the event that the recipient expends a total amount of state financial assistance equal to or in excess of $750,000 in any fiscal year of such recipient (for fiscal years ending June 30, 2017, and thereafter), the recipient must have a State single or project-specific audit for such fiscal year in accordance with Section 215.97, F.S.; Rule Chapter 69I-5, F.A.C., State Financial Assistance; and Chapters 10.550 (local governmental entities) or 10.650 (nonprofit and for-profit organizations), Rules of the Auditor General. EXHIBIT 1 to this form lists the state financial assistance awarded through the Department of Environmental Protection by this agreement. In determining the state financial assistance expended in its fiscal year, the recipient shall consider all sources of state financial assistance, including state financial assistance received from the Department of Environmental Protection, other state agencies, and other nonstate entities. State financial assistance does not include federal direct or pass-through awards and resources received by a nonstate entity for Federal program matching requirements.

2. In connection with the audit requirements addressed in Part II, paragraph 1; the recipient shall ensure that the audit complies with the requirements of Section 215.97(8), Florida Statutes. This includes submission of a financial reporting package as defined by Section 215.97(2), Florida Statutes, and Chapters 10.550 (local governmental entities) or 10.650 (nonprofit and for-profit organizations), Rules of the Auditor General.

3. If the recipient expends less than $750,000 in state financial assistance in its fiscal year (for fiscal year ending June 30, 2017, and thereafter), an audit conducted in accordance with the provisions of Section 215.97, Florida Statutes, is not required. In the event that the recipient expends less than $750,000 in state financial assistance in its fiscal year, and elects to have an audit conducted in accordance with the provisions of Section 215.97, Florida Statutes, the cost of the audit must be paid from the non-state entity's resources (i.e., the cost of such an audit must be paid from the recipient's resources obtained from other than State entities).

4. For information regarding the Florida Catalog of State Financial Assistance (CSFA), a recipient should access the Florida Single Audit Act website located at https://apps.fldfs.com/fsaa for assistance. In addition to the above websites, the following websites may be accessed for information: Legislature's Website at http://www.leg.state.fl.us/Welcome/index.cfm, State of Florida's website at http://www.myflorida.com/, Department of Financial Services' Website at http://www.fldfs.com/and the Auditor General's Website at http://www.myflorida.com/audgen/.

PART III: OTHER AUDIT REQUIREMENTS

(NOTE: This part would be used to specify any additional audit requirements imposed by the State awarding entity that are solely a matter of that State awarding entity's policy (i.e., the audit is not required by Federal or State laws and is not in conflict with other Federal or State audit requirements). Pursuant to Section 215.97(8), Florida Statutes, State agencies may conduct or arrange for audits of State financial assistance that are in addition to audits conducted in accordance with Section 215.97, Florida Statutes. In such an event, the State awarding agency must arrange for funding the full cost of such additional audits.)

PART IV: REPORT SUBMISSION

1. Copies of reporting packages for audits conducted in accordance with 2 CFR Part 200, Subpart F-Audit Requirements, and required by PART I of this form shall be submitted, when required by 2 CFR 200.512, by or on behalf of the recipient directly to the Federal Audit Clearinghouse (FAC) as provided in 2 CFR 200.36 and 200.512

   A. The Federal Audit Clearinghouse designated in 2 CFR §200.501(a) (the number of copies required by 2 CFR §200.501(a) should be submitted to the Federal Audit Clearinghouse), at the following address:

By Mail:

Federal Audit Clearinghouse
Bureau of the Census
1201 East 10th Street
Jeffersonville, IN 47132

Submissions of the Single Audit reporting package for fiscal periods ending on or after January 1, 2008, must be submitted using the Federal Clearinghouse's Internet Data Entry System which can be found at http://harvester.census.gov/facweb/

2. Copies of financial reporting packages required by PART II of this Attachment shall be submitted by or on behalf of the recipient directly to each of the following:

A. The Department of Environmental Protection at one of the following addresses:

By Mail:
Audit Director
Florida Department of Environmental Protection
Office of Inspector General, MS 40
3900 Commonwealth Boulevard
Tallahassee, Florida 32399-3000

Electronically:
FDEPSingleAudit@dep.state.fl.us

B. The Auditor General's Office at the following address:

Auditor General
Local Government Audits/342
Claude Pepper Building, Room 401
111 West Madison Street
Tallahassee, Florida 32399-1450

The Auditor General's website (http://flauditor.gov/) provides instructions for filing an electronic copy of a financial reporting package.

3. Copies of reports or management letters required by PART III of this Attachment shall be submitted by or on behalf of the recipient directly to the Department of Environmental Protection at one of the following addresses:

By Mail:
Audit Director
Florida Department of Environmental Protection
Office of Inspector General, MS 40
3900 Commonwealth Boulevard
Tallahassee, Florida 32399-3000

Electronically:
FDEPSingleAudit@dep.state.fl.us

4. Any reports, management letters, or other information required to be submitted to the Department of Environmental Protection pursuant to this Agreement shall be submitted timely in accordance with 2 CFR 200.512, section 215.97, F.S., and Chapters 10.550 (local governmental entities) or 10.650 (nonprofit and for-profit organizations), Rules of the Auditor General, as applicable.

5. Recipients, when submitting financial reporting packages to the Department of Environmental Protection for audits done in accordance with 2 CFR 200, Subpart F-Audit Requirements, or Chapters 10.550 (local governmental entities) and 10.650 (non and for-profit organizations), Rules of the Auditor General, should indicate the date and the reporting package was delivered to the recipient correspondence accompanying the reporting package.

PART V: RECORD RETENTION

The recipient shall retain sufficient records demonstrating its compliance with the terms of the award and this Agreement for a period of **five (5)** years from the date the audit report is issued, and shall allow the Department of Environmental Protection, or its designee, Chief Financial Officer, or Auditor General access to such records upon request. The recipient shall ensure that audit working papers are made available to the Department of Environmental Protection, or its designee, Chief Financial Officer, or Auditor General upon request for a period of **three (3)** years from the date the audit report is issued, unless extended in writing by the Department of Environmental Protection.

EXHIBIT – 1

FUNDS AWARDED TO THE RECIPIENT PURSUANT TO THIS AGREEMENT CONSIST OF THE FOLLOWING:

Note: If the resources awarded to the recipient represent more than one federal program, provide the same information shown below for each federal program and show total federal resources awarded

Federal Resources Awarded to the Recipient Pursuant to this Agreement Consist of the Following:					
Federal Program A	Federal Agency	CFDA Number	CFDA Title	Funding Amount	State Appropriation Category
				$	
Federal Program B	Federal Agency	CFDA Number	CFDA Title	Funding Amount	State Appropriation Category
				$	

Note: Of the resources awarded to the recipient represent more than one federal program, list applicable compliance requirements for each federal program in the same manner as shown below:

Federal Program A	First Compliance requirement: i.e.: (what services of purposes resources must be used for)	
	Second Compliance requirement: i.e.:(eligibility requirement for recipients of the resources)	
	Etc.	
	Etc.	
Federal Program B	First Compliance requirement: i.e.: (what services of purposes resources must be used for)	
	Second Compliance requirement: i.e.: (eligibility requirement for recipients of the resources)	
	Etc.	
	Etc.	

Note: If the resources awarded to the recipient for matching represent more than one federal program, provide the same information shown below for each federal program and show total state resources awarded for matching.

State Resources Awarded to the Recipient Pursuant to this Agreement Consist of the Following Matching Resources for Federal Programs:					
Federal Program A	Federal Agency	CFDA	CFDA Title	Funding Amount	State Appropriation Category
Federal Program B	Federal Agency	CFDA	CFDA Title	Funding Amount	State Appropriation Category

Note: If the resources awarded to the recipient represent more than one state project, provide the same information shown below for each state project and show total state financial assistance awarded that is subject to section 215.97, F.S.

State Resources Awarded to the Recipient Pursuant to this Agreement Consist of the Following Resources Subject to Section 215.97, F.S.:						
State Program A	State Awarding Agency	State Fiscal Year[1]	CSFA Number	CSFA Title or Funding Source Description	Funding Amount	State Appropriation Category
Original Agreement	Florida Department of Environmental Protection	2019-2020	37.039	Statewide Surface Restoration and Wastewater Projects	$122,052	140047
Original Agreement	Florida Department of Environmental Protection	2021-2022	37.039	Statewide Surface Restoration and Wastewater Projects	$7,000,000	140047
Amendment No. 1	Florida Department of Environmental Protection	2022-2023	37.039	Statewide Surface Restoration and Wastewater Projects	$6,983,936	140047
State Program B	State Awarding Agency	State Fiscal Year[2]	CSFA Number	CSFA Title or Funding Source Description	Funding Amount	State Appropriation Category

Total Award	$14,105,988	

Note: List applicable compliance requirement in the same manner as illustrated above for federal resources. For matching resources provided by the Department for DEP for federal programs, the requirements might be similar to the requirements for the applicable federal programs. Also, to the extent that different requirements pertain to different amount for the non-federal resources, there may be more than one grouping (i.e. 1, 2, 3, etc.) listed under this category.

For each program identified above, the recipient shall comply with the program requirements described in the Catalog of Federal Domestic Assistance (CFDA) [https://sam.gov/content/assistance-listings] and/or the Florida Catalog of State Financial Assistance (CSFA) [https://apps.fldfs.com/fsaa/searchCatalog.aspx], and State Projects Compliance Supplement (Part Four: State Projects Compliance Supplement [https://apps.fldfs.com/fsaa/state_project_compliance.aspx]. The services/purposes for which the funds are to be used are included in the Agreement's Grant Work Plan. Any match required by the Recipient is clearly indicated in the Agreement.

[1] Subject to change by Change Order.
[2] Subject to change by Change Order.

AMENDMENT NO. 2
TO AGREEMENT NO. LPA0212
BETWEEN
FLORIDA DEPARTMENT OF ENVIRONMENTAL PROTECTION
AND
POLK REGIONAL WATER COOPERATIVE

This Amendment to Agreement No. LPA0212 (Agreement), as previously amended, is made by and between the Department of Environmental Protection (Department), an agency of the State of Florida, and the Polk Regional Water Cooperative (Grantee), on the date last signed below.

WHEREAS, the Department entered into the Agreement with the Grantee for Polk Regional Water Cooperative Heartland Headwaters Protection and Sustainability (Project), effective July 28, 2022; and,

WHEREAS, $7,146,500 in additional funding for this Project is provided under Line Item 1705A of the 2023-2024 General Appropriations Act; and the total funding for this Agreement is now $21,252,488; and,

WHEREAS, the reimbursement period for the additional funding provided under Line Item 1705A of the 2023-2024 General Appropriations Act begins on July 1, 2023; and,

WHEREAS, the Grantee has requested a revision in the scope of work and a budget reallocation for the Project; and,

WHEREAS, an extension to the Agreement is needed to provide additional time to complete the Project; and,

WHEREAS, other changes to the Agreement are necessary; and,

WHEREAS, the parties have agreed to amend the Agreement as set forth herein.

NOW THEREFORE, the parties agree as follows:

1. Section 3. of the Standard Grant Agreement is hereby revised to change the Date of Expiration to December 31, 2025. The Department and the Grantee shall continue to perform their respective duties during this extension period pursuant to the same terms and conditions provided in the Agreement.

2. Section 5. of the Standard Grant Agreement is hereby revised to the following:

Total Amount of Funding:	**Funding Source?**	**Award #s or Line Item Appropriations:**	**Amount per Source(s):**
$21,252,488	☑ State ☐ Federal	LP, GAA LI 1657A, FY 19-20, GR	$122,052
	☑ State ☐ Federal	LP, GAA LI 1607A, FY 21-22, GR	$7,000,000
	☑ State ☐ Federal	LP, GAA LI 1665A, FY 22-23, GR	$6,983,936
	☑ State ☐ Federal	LP, GAA LI 1705A, FY 23-24, GR	$7,146,500
	☐ Grantee Match		
		Total Amount of Funding + Grantee Match, if any:	$21,252,488

3. The following is hereby added to Attachment 1 as Section 8.k.:

   State Funds Documentation. Pursuant to section 216.1366, F.S., if Contractor meets the definition of a non-profit organization under section 215.97(2)(m), F.S., Contractor must provide the Department with documentation that indicates the amount of state funds:

   i. Allocated to be used during the full term of the contract or agreement for remuneration to any member of the board of directors or an officer of Contractor.
   ii. Allocated under each payment by the public agency to be used for remuneration of any member of the board of directors or an officer of the Contractor.

The documentation must indicate the amounts and recipients of the remuneration. Such information must be posted on the State's contract tracking system and maintained pursuant to section 215.985, F.S., and must be posted on the Contractor's website, if Contractor maintains a website.

4. Attachment 3-1, Revised Grant Work Plan, is hereby deleted in its entirety and replaced with Attachment 3-2, Revised Grant Work Plan, as attached to this Amendment and hereby incorporated into the Agreement. All references in the Agreement to Attachment 3 shall hereinafter refer to Attachment 3-2, Revised Grant Work Plan.

5. Attachment 5-1, Special Audit Requirements, is hereby deleted in its entirety and replaced with Attachment 5-2, Revised Special Audit Requirements, attached hereto and made a part of the Agreement. All references in the Agreement to Attachment 5, shall hereinafter refer to Attachment 5-2, Revised Special Audit Requirements.

6. All other terms and conditions of the Agreement remain in effect. If and to the extent that any inconsistency may appear between the Agreement and this Amendment, the provisions of this Amendment shall control.

REMAINDER OF PAGE INTENTIONALLY LEFT BLANK

The parties agree to the terms and conditions of this Amendment and have duly authorized their respective representatives to sign it on the dates indicated below.

POLK REGIONAL WATER COOPERATIVE

By: _____
Authorized Signature

Eric DeHaven, Executive Director
Print Name and Title

Date: 9/28/2023

STATE OF FLORIDA DEPARTMENT OF ENVIRONMENTAL PROTECTION

By: Angela Knecht Digitally signed by Angela Knecht Date: 2023.09.30 08:38:42 -04'00'
Secretary or Designee

Angela Knecht, Division Director
Print Name and Title

Date: _____

Nathan Jagoda Digitally signed by Nathan Jagoda Date: 2023.09.29 16:30:56 -04'00'
Nathan Jagoda, DEP Grant Manager

Michael Barr Digitally signed by Michael Barr Date: 2023.09.29 16:41:56 -04'00'
Michael Barr, DEP QC Reviewer

List of attachments/exhibits included as part of this Amendment:

Specify Type	Letter/ Number	Description
Attachment	3-2	Revised Grant Work Plan
Attachment	5-2	Revised Special Audit Requirements

ATTACHMENT 3-2
REVISED GRANT WORK PLAN

PROJECT TITLE: Polk Regional Water Cooperative Heartland Headwaters Protection and Sustainability

PROJECT LOCATION: The Project will be located within the service areas of the Polk Regional Water Cooperative (PRWC) (Grantee). The PRWC is made up of Polk County and 15 municipalities. The County seat is located in Bartow, Florida; with an approximate Lat/Long of 27.8940, -81.8512.

PROJECT BACKGROUND: In 2017, the Florida Legislature passed HB 573, better known as the Heartland Headwaters Protection and Sustainability Act (Chapter No. 2017-111, Laws of Florida). The Act statutorily recognizes the vital importance of those portions of the Green Swamp Area of Critical State Concern that lie within the jurisdictional bounds of Polk and Lake counties and designates Polk County's aquifers as the headwaters for six of Florida's major rivers: the Alafia, Hillsborough, Kissimmee, Ocklawaha, Peace, and Withlacoochee Rivers. Furthermore, it acknowledges the critical importance of Polk County's aquifers to the economic and ecological health of the surrounding regions. The Act declared that fostering partnerships between Regional Water Supply Authorities (RWSA) and local governments is in the state's interest.

For the purposes of fostering such partnerships, the Act requires that the PRWC prepare annual comprehensive reports listing projects that are needed to protect and restore the region's water resources, so that they may be considered for state funding. These funds were awarded to PRWC (Grantee); the following entities will work in conjunction with the Grantee on this project: Polk City, City of Eagle Lake, City of Winter Haven, City of Frostproof, Polk County.

Project No. 1 - PRWC West Polk Wellfield Lower Floridan Aquifer Project

PROJECT BACKGROUND: In order to meet growing water demands, the PRWC determined that multiple projects would be required to meet future demands. The West Polk project, which would utilize the deep, lower Floridan, brackish aquifer as a source, would serve as one project which could help meet demands in western Polk County. Use of the lower Floridan as a water supply is thought to be protective of the region's sensitive natural resources.

PROJECT DESCRIPTION: The Grantee will complete a well testing program and designs for a reverse osmosis treatment facility and associated piping to serve numerous communities in western Polk County. This Project includes acquisition of land for the testing and the construction of the raw water wellfield. This project also includes acquisition of land for the water production facility, injection wells, and pipeline alignments. Legal fees may also be incurred as a part of this process.

The Grantee does not anticipate that the funding under this Agreement will result in a fully completed project, so this Agreement will cover a portion of the work.

Project No. 2 Eagle Lake Wastewater Pump Station Replacement Project

PROJECT BACKGROUND: Lake McLeod and Eagle Lake exist within the Peace Creek Watershed, in which there is a TMDL for fecal coliform. The City of Eagle Lake plans to replace two wastewater pumping stations to prevent failures which have the potential to overflow sewage into the lakes.

PROJECT DESCRIPTION: The Grantee will complete the construction plan revision, bid document revisions, bidding and contractor selection, and the construction of two wastewater pumping stations and installation of emergency generators to replace aging existing pumping stations, one located at a park near Eagle Lake and one located in a low elevation area adjacent to Lake McLeod.

Project No. 3 - Winter Haven Septic to Sewer Program

PROJECT BACKGROUND: Nearly half of the 50 lakes in Winter Haven are on the impaired list for water quality due in part to septic tank loading. The City of Winter Haven serves a population of approximately 74,675, which includes 14,070 residences that are on septic systems. This project will design, permit and construct the first remediation area from the priority list identified in the Septic to Sewer Master Plan completed in January 2021. The Septic to Sewer Master Plan prioritizes and will subsequently eliminate some of the septic tank discharges by converting septic tanks to central sewer in a very high recharge area. The City of Winter Haven has completed a Septic to Sewer Master Plan in January 2021 which recommends priority areas for the conversion to sewer.

PROJECT DESCRIPTION: The Grantee will complete the design, permitting, and bidding services for a new public collection system, as well as on-site private septic system evaluations, connections to the new collection system, and septic tank decommissioning for approximately 125 residential and commercial accounts around East Lake Hartridge and US 17. They will also complete the construction of the collection system within the right-of-way in Remediation Area 6A and Boggy Bottom Area.

The Grantee does not anticipate that the funding under this Agreement will result in a fully completed project, so this Agreement will cover a portion of the work.

Project No. 4 - Frostproof Wastewater System Upgrades

PROJECT BACKGROUND: The City of Frostproof has prepared 90% design plans and technical specifications for the planned construction of a pretreatment/headworks system at its wastewater treatment plant. The City is also in the process of designing the expansion of its rapid infiltration basin (RIB) system for effluent disposal.

PROJECT DESCRIPTION: The Grantee will complete the design and construction of all components for the headworks, including the control panel, screen, compactor, grit system, stairs/walkway sensor, delivery, startup, training, permitting, and construction administration, as well as the design and construction of a rapid infiltration basin expansion and emergency generators for the lift station.

The Grantee does not anticipate that the funding under this Agreement will result in a fully completed project, so this Agreement will cover a portion of the work.

Project No. 5 - Winter Haven ASR Wellfield

PROJECT BACKGROUND: The Winter Haven area is the headwaters for the Peace River which flows to Charlotte Harbor. This project is part of a larger One Water Master Plan to create green infrastructure projects, which provide water supply, water quality, flooding and natural system restoration. This project involves the design and construction of an aquifer storage and recovery (ASR) wellfield which would take excess surface water flow during flood events, store it in the lower Floridan aquifer, and then recover the water during drought events.

PROJECT DESCRIPTION: The Grantee will complete the design and construction of a roughly 1.5 MGD ASR well system to store excess water from the Peace Creek System for beneficial use, including a report on the Flow and Water Quality Data Summary and Analysis of available water sources and quantities and characterize water quality to determine treatment requirements, local hydrogeology, area features, and regulatory reviews, and well options screening evaluations.

The Grantee does not anticipate that the funding under this Agreement will result in a fully completed project, so this Agreement will cover a portion of the work.

Project No. 6 - Polk County AWS Receiving Facilities

PROJECT BACKGROUND: Polk County is a member of the PRWC and will receive regional alternative water supplies from the PRWC via the Southeast Wellfield Project. Polk County must design and construct a receiving station to facilitate the re-pumping to an AWS system in its Northeast Regional Utility Service Area (NERUSA).

PROJECT DESCRIPTION: The Grantee will complete the design of an alternative water supply storage and repump facility. The station will include an approximately 1 MGD storage tank, pumps, chemical feed, electrical equipment, generator, and associated equipment. This project includes land acquisition, designs, and permitting for the new facility.

The Grantee does not anticipate that the funding under this Agreement will result in a fully completed project, so this Agreement will cover a portion of the work.

Project No. 7 - Southeast Wellfield Lower Floridian Aquifer Project

PROJECT BACKGROUND: The Polk Regional Water Cooperative (PRWC) exists within the Central Florida Water Initiative area, a region of Florida identified as being limited in traditional water supply. This project is intended to help meet growing demands by utilizing the deep, lower Floridan, brackish aquifer as a source. Use of the lower Floridan as a water supply is thought to be protective of the region's sensitive natural resources.

PROJECT DESCRIPTION: The Grantee will acquire property or right of way for a 15 MGD reverse osmosis treatment facility, approximately 61 miles of transmission piping, and approximately 10 miles of raw water main and associated raw water wells. Legal fees may also be incurred as a part of this process.

Project No. 8 – Demand Management Plan Project

PROJECT BACKGROUND: Building on the recommendations memorialized in the 2020 Demand Management Plan, PRWC members are implementing conservation measures intended to lower potable demands by up to 5 MGD by 2040 through active conservation measures. This project will support those efforts, which are critical to compliance with the Central Florida Water Initiative Rulemaking and protecting the natural resources of the county. Example programs include low-flow toilet vouchers, irrigation audits, and conservation kits.

PROJECT DESCRIPTION: The Grantee will implement rebates for water-savings devices and irrigation evaluations to encourage residential water conservation.

TASKS: All documentation will be submitted electronically unless otherwise indicated.

Task 1: Land Acquisition

Deliverables: The Grantee will acquire fee simple or less-than-fee simple interest on properties within the service areas of the PRWC. Costs related to pre-acquisition and acquisition will be reimbursable. The property interests will be held by PRWC after the acquisition is complete. The Grantee will complete the following:

- Project 1: Land acquisition of the raw water wells, water plant, and pipeline for a 2.5 MGD facility.
- Project 6: Land acquisition for an alternative water supply storage and repump facility.

- Project 7: Land acquisition for a water treatment facility, pipeline, and raw water wells for a 15 MGD facility.

Documentation: The Grantee will submit: 1) copies of all appraisals or written justification for why there is not an appraisal, as applicable; 2) the closing statement or all closing documents; 3) title exam/insurance; 4) property survey; 5) boundary map; and 6) the deed, recorded easement, or property interest, as applicable.

Performance Standard: The Department's Grant Manager will review the documentation to verify that the deliverables have been completed as described above. Upon review and written acceptance by the Department's Grant Manager, the Grantee may proceed with payment request submittal.

Payment Request Schedule: The Grantee may submit a payment request for cost reimbursement no more frequently than monthly.

Task 2: Preconstruction Activities

Deliverables: The Grantee will complete the following:

- Project 2: Design of the Eagle Lake wastewater pumping station and FDEP permit renewal.
- Project 3: Design of the Winter Haven Area 6A and Boggy Bottom Area public collection system.
- Project 4: Design of an expansion of Frostproof's rapid infiltration basin (RIB) system for effluent disposal.
- Project 5: Evaluation of the flow and water quality characteristics for the Winter Haven ASR wellfield.
- Project 6: Preliminary design report and design of the Polk County AWS receiving facilities.

Documentation: The Grantee will submit: 1) a signed acceptance of the completed work to date, as provided in the Grantee's Certification of Payment Request; and 2) a summary of preconstruction activities to date, indicating the percentage of design completion for the time period covered in the payment request. For the final documentation, the Grantee will also submit a copy of the design completed with the funding provided for this task and a list of all required permits identifying issue dates and issuing authorities. The Grantee will also submit the following:

- Project 2: Construction plans and renewed permit for the Eagle Lake wastewater pumping station.
- Project 3: Construction plans for the 6A and Boggy Bottom Area public collection system.
- Project 4: Construction plans for a pretreatment/headworks system.
- Project 5: Draft and final summary memoranda of the flow and water quality characteristics, local hydrogeology, and well options; Class V well construction permit application.
- Project 6: Preliminary design report, 60% design documents, 90% design documents for the Polk County AWS receiving facilities.

Performance Standard: The Department's Grant Manager will review the documentation to verify that the deliverables have been completed as described above. Upon review and written acceptance by the Department's Grant Manager, the Grantee may proceed with payment request submittal.

Payment Request Schedule: The Grantee may submit a payment request for cost reimbursement no more frequently than monthly.

Task 3: Bidding and Contractor Selection

Deliverables: The Grantee will complete the following:

- Project 2: Bidding documents for the Eagle Lake wastewater pump station.
- Project 4: City of Frostproof bidding documents for the headworks and RIB improvements.
- Project 6: Polk County AWS receiving facility bid documents.

Documentation: The Grantee will submit: 1) the public notice of advertisement for the bid; 2) the bid package; and 3) a written notice of selected contractor(s).

Performance Standard: The Department's Grant Manager will review the documentation to verify that the deliverables have been completed as described above. Upon review and written acceptance by the Department's Grant Manager, the Grantee may proceed with payment request submittal.

Payment Request Schedule: The Grantee may submit a payment request for cost reimbursement no more frequently than monthly.

Task 4: Construction

Deliverables: The Grantee will construct the following items in accordance with the construction contract documents.

- Project 2: City of Eagle Lake wastewater pumping station.
- Project 3: City of Winter Haven sewer collection system.
- Project 4: City of Frostproof headworks and RIB improvements.
- Project 5: City of Winter Haven ASR well construction.

Documentation: The Grantee will submit 1) a copy of the final design; 2) a signed acceptance of the completed work to date, as provided in the Grantee's Certification of Payment Request; and 3) a signed Engineer's Certification of Payment Request.

Performance Standard: The Department's Grant Manager will review the documentation to verify that the deliverables have been completed as described above. Upon review and written acceptance by the Department's Grant Manager, the Grantee may proceed with payment request submittal.

Payment Request Schedule: The Grantee may submit a payment request for cost reimbursement no more frequently than monthly.

Task 5: Conservation Incentives

Deliverables: The Grantee (in cooperation with PRWC member governments) will provide rebates or contract services to eligible recipients for approximately 600 existing homes across Polk County for the purchase and/or installation of water saving technologies including some combination of the following: landscape and irrigation audits, rain sensors and smart controllers, toilet replacement rebates, and conservation kits for inside and outside the home. Completion of work will be through a combination of installation and rebates to consumers. The Grantee will complete the following:

- Project 8: Implementation of rebates for water-saving devices and irrigation audits.

Documentation: The Grantee will submit: 1) a signed acceptance of the completed work to date, as provided in the Grantee's Certification of Payment Request; 2) summary with a brief description of the work completed to date; 3) a list of addresses and types of the participating properties; and 4) proof of payments for item(s) installed and/or supplied, as evidenced by copies of invoices or rebate forms, as applicable.

Performance Standard: The Department's Grant Manager will review the documentation to verify that the deliverables have been completed as described above. Upon review and written acceptance by the Department's Grant Manager, the Grantee may proceed with payment request submittal.

Payment Request Schedule: The Grantee may submit a payment request for cost reimbursement no more frequently than monthly.

PROJECT TIMELINE & BUDGET DETAIL: The tasks must be completed by, and all documentation received by, the corresponding task end date. Cost reimbursable grant funding must not exceed the budget amounts as indicated below.

Task No.	Task Title	Budget Category	Grant Amount	Task Start Date	Task End Date
1	Land Acquisition	Land Acquisition	$122,052 [1]	07/01/2019	06/30/2025
			$1,727,557	07/01/2021	06/30/2025
			$6,983,936	07/01/2022	06/30/2025
			$7,071,500	07/01/2023	06/30/2025
2	Preconstruction Activities	Contractual Services	$877,116	07/01/2021	06/30/2025
3	Bidding and Contractor Selection	Contractual Services	$65,000	07/01/2021	06/30/2025
4	Construction	Contractual Services	$4,165,327	07/01/2021	06/30/2025
		Miscellaneous/ Other Expenses	$165,000	07/01/2021	06/30/2025
5	Conservation Incentives	Contractual Services	$75,000	07/01/2023	06/30/2025
		Total:	$21,252,488		

[1]$122,052 of funding provided under Line Item 1657A of the FY19-20 General Appropriations Act will go toward Land Acquisition for Project 1. The remaining funding in this Task may go toward Land Acquisition for Projects 1, 6, or 7.

Note that, per Section 8.h. of Attachment 1 in the Agreement, authorization for continuation and completion of work and any associated payments may be rescinded, with proper notice, at the discretion of the Department if the Legislature reduces or eliminates appropriations. Extending the contract end date carries the risk that funds for this project may become unavailable in the future. This should be a consideration for the Grantee with this and future requests for extension.

STATE OF FLORIDA
DEPARTMENT OF ENVIRONMENTAL PROTECTION
Revised Special Audit Requirements
(State and Federal Financial Assistance)

Attachment 5-2

The administration of resources awarded by the Department of Environmental Protection *(which may be referred to as the "Department", "DEP", "FDEP" or "Grantor", or other name in the agreement*) to the recipient *(which may be referred to as the "Recipient", "Grantee" or other name in the agreement)* may be subject to audits and/or monitoring by the Department of Environmental Protection, as described in this attachment.

MONITORING

In addition to reviews of audits conducted in accordance with 2 CFR Part 200, Subpart F-Audit Requirements, and Section 215.97, F.S., as revised (see "AUDITS" below), monitoring procedures may include, but not be limited to, on-site visits by DEP Department staff, limited scope audits as defined by 2 CFR 200.425, or other procedures. By entering into this Agreement, the recipient agrees to comply and cooperate with any monitoring procedures/processes deemed appropriate by the Department of Environmental Protection. In the event the Department of Environmental Protection determines that a limited scope audit of the recipient is appropriate, the recipient agrees to comply with any additional instructions provided by the Department to the recipient regarding such audit. The recipient further agrees to comply and cooperate with any inspections, reviews, investigations, or audits deemed necessary by the Chief Financial Officer (CFO) or Auditor General.

AUDITS

PART I: FEDERALLY FUNDED

This part is applicable if the recipient is a State or local government or a non-profit organization as defined in 2 CFR §200.330

1. A recipient that expends $750,000 or more in Federal awards in its fiscal year, must have a single or program-specific audit conducted in accordance with the provisions of 2 CFR Part 200, Subpart F. EXHIBIT 1 to this Attachment indicates Federal funds awarded through the Department of Environmental Protection by this Agreement. In determining the federal awards expended in its fiscal year, the recipient shall consider all sources of federal awards, including federal resources received from the Department of Environmental Protection. The determination of amounts of federal awards expended should be in accordance with the guidelines established in 2 CFR 200.502-503. An audit of the recipient conducted by the Auditor General in accordance with the provisions of 2 CFR Part 200.514 will meet the requirements of this part.

2. For the audit requirements addressed in Part I, paragraph 1, the recipient shall fulfill the requirements relative to auditee responsibilities as provided in 2 CFR 200.508-512.

3. A recipient that expends less than $750,000 in federal awards in its fiscal year is not required to have an audit conducted in accordance with the provisions of 2 CFR Part 200, Subpart F-Audit Requirements. If the recipient expends less than $750,000 in federal awards in its fiscal year and elects to have an audit conducted in accordance with the provisions of 2 CFR 200, Subpart F-Audit Requirements, the cost of the audit must be paid from non-federal resources (i.e., the cost of such an audit must be paid from recipient resources obtained from other federal entities.

4. The recipient may access information regarding the Catalog of Federal Domestic Assistance (CFDA) via the internet at https://sam.gov/content/assistance-listings.

PART II: STATE FUNDED

This part is applicable if the recipient is a nonstate entity as defined by Section 215.97(2), Florida Statutes.

1. In the event that the recipient expends a total amount of state financial assistance equal to or in excess of $750,000 in any fiscal year of such recipient (for fiscal years ending June 30, 2017, and thereafter), the recipient must have a State single or project-specific audit for such fiscal year in accordance with Section 215.97, F.S.; Rule Chapter 69I-5, F.A.C., State Financial Assistance; and Chapters 10.550 (local governmental entities) or 10.650 (nonprofit and for-profit organizations), Rules of the Auditor General. EXHIBIT 1 to this form lists the state financial assistance awarded through the Department of Environmental Protection by this agreement. In determining the state financial assistance expended in its fiscal year, the recipient shall consider all sources of state financial assistance, including state financial assistance received from the Department of Environmental Protection, other state agencies, and other nonstate entities. State financial assistance does not include federal direct or pass-through awards and resources received by a nonstate entity for Federal program matching requirements.

2. In connection with the audit requirements addressed in Part II, paragraph 1; the recipient shall ensure that the audit complies with the requirements of Section 215.97(8), Florida Statutes. This includes submission of a financial reporting package as defined by Section 215.97(2), Florida Statutes, and Chapters 10.550 (local governmental entities) or 10.650 (nonprofit and for-profit organizations), Rules of the Auditor General.

3. If the recipient expends less than $750,000 in state financial assistance in its fiscal year (for fiscal year ending June 30, 2017, and thereafter), an audit conducted in accordance with the provisions of Section 215.97, Florida Statutes, is not required. In the event that the recipient expends less than $750,000 in state financial assistance in its fiscal year, and elects to have an audit conducted in accordance with the provisions of Section 215.97, Florida Statutes, the cost of the audit must be paid from the non-state entity's resources (i.e., the cost of such an audit must be paid from the recipient's resources obtained from other than State entities).

4. For information regarding the Florida Catalog of State Financial Assistance (CSFA), a recipient should access the Florida Single Audit Act website located at https://apps.fldfs.com/fsaa for assistance. In addition to the above websites, the following websites may be accessed for information: Legislature's Website at http://www.leg.state.fl.us/Welcome/index.cfm, State of Florida's website at http://www.myflorida.com/, Department of Financial Services' Website at http://www.fldfs.com/and the Auditor General's Website at http://www.myflorida.com/audgen/.

PART III: OTHER AUDIT REQUIREMENTS

(NOTE: This part would be used to specify any additional audit requirements imposed by the State awarding entity that are solely a matter of that State awarding entity's policy (i.e., the audit is not required by Federal or State laws and is not in conflict with other Federal or State audit requirements). Pursuant to Section 215.97(8), Florida Statutes, State agencies may conduct or arrange for audits of State financial assistance that are in addition to audits conducted in accordance with Section 215.97, Florida Statutes. In such an event, the State awarding agency must arrange for funding the full cost of such additional audits.)

PART IV: REPORT SUBMISSION

1. Copies of reporting packages for audits conducted in accordance with 2 CFR Part 200, Subpart F-Audit Requirements, and required by PART I of this form shall be submitted, when required by 2 CFR 200.512, by or on behalf of the recipient directly to the Federal Audit Clearinghouse (FAC) as provided in 2 CFR 200.36 and 200.512

   A. The Federal Audit Clearinghouse designated in 2 CFR §200.501(a) (the number of copies required by 2 CFR §200.501(a) should be submitted to the Federal Audit Clearinghouse), at the following address:

By Mail:

Federal Audit Clearinghouse
Bureau of the Census
1201 East 10th Street
Jeffersonville, IN 47132

Submissions of the Single Audit reporting package for fiscal periods ending on or after January 1, 2008, must be submitted using the Federal Clearinghouse's Internet Data Entry System which can be found at http://harvester.census.gov/facweb/

2. Copies of financial reporting packages required by PART II of this Attachment shall be submitted by or on behalf of the recipient directly to each of the following:

A. The Department of Environmental Protection at one of the following addresses:

By Mail:
Audit Director
Florida Department of Environmental Protection
Office of Inspector General, MS 40
3900 Commonwealth Boulevard
Tallahassee, Florida 32399-3000

Electronically:
FDEPSingleAudit@dep.state.fl.us

B. The Auditor General's Office at the following address:

Auditor General
Local Government Audits/342
Claude Pepper Building, Room 401
111 West Madison Street
Tallahassee, Florida 32399-1450

The Auditor General's website (http://flauditor.gov/) provides instructions for filing an electronic copy of a financial reporting package.

3. Copies of reports or management letters required by PART III of this Attachment shall be submitted by or on behalf of the recipient directly to the Department of Environmental Protection at one of the following addresses:

By Mail:
Audit Director
Florida Department of Environmental Protection
Office of Inspector General, MS 40
3900 Commonwealth Boulevard
Tallahassee, Florida 32399-3000

Electronically:
FDEPSingleAudit@dep.state.fl.us

4. Any reports, management letters, or other information required to be submitted to the Department of Environmental Protection pursuant to this Agreement shall be submitted timely in accordance with 2 CFR 200.512, section 215.97, F.S., and Chapters 10.550 (local governmental entities) or 10.650 (nonprofit and for-profit organizations), Rules of the Auditor General, as applicable.

5. Recipients, when submitting financial reporting packages to the Department of Environmental Protection for audits done in accordance with 2 CFR 200, Subpart F-Audit Requirements, or Chapters 10.550 (local governmental entities) and 10.650 (non and for-profit organizations), Rules of the Auditor General, should indicate the date and the reporting package was delivered to the recipient correspondence accompanying the reporting package.

PART V: RECORD RETENTION

The recipient shall retain sufficient records demonstrating its compliance with the terms of the award and this Agreement for a period of **five (5)** years from the date the audit report is issued, and shall allow the Department of Environmental Protection, or its designee, Chief Financial Officer, or Auditor General access to such records upon request. The recipient shall ensure that audit working papers are made available to the Department of Environmental Protection, or its designee, Chief Financial Officer, or Auditor General upon request for a period of **three (3)** years from the date the audit report is issued, unless extended in writing by the Department of Environmental Protection.

EXHIBIT – 1

FUNDS AWARDED TO THE RECIPIENT PURSUANT TO THIS AGREEMENT CONSIST OF THE FOLLOWING:

Note: If the resources awarded to the recipient represent more than one federal program, provide the same information shown below for each federal program and show total federal resources awarded

Federal Resources Awarded to the Recipient Pursuant to this Agreement Consist of the Following:					
Federal Program A	Federal Agency	CFDA Number	CFDA Title	Funding Amount	State Appropriation Category
				$	
Federal Program B	Federal Agency	CFDA Number	CFDA Title	Funding Amount	State Appropriation Category
				$	

Note: Of the resources awarded to the recipient represent more than one federal program, list applicable compliance requirements for each federal program in the same manner as shown below:

Federal Program A	First Compliance requirement: i.e.: (what services of purposes resources must be used for)	
	Second Compliance requirement: i.e.:(eligibility requirement for recipients of the resources)	
	Etc.	
	Etc.	
Federal Program B	First Compliance requirement: i.e.: (what services of purposes resources must be used for)	
	Second Compliance requirement: i.e.: (eligibility requirement for recipients of the resources)	
	Etc.	
	Etc.	

Note: If the resources awarded to the recipient for matching represent more than one federal program, provide the same information shown below for each federal program and show total state resources awarded for matching.

State Resources Awarded to the Recipient Pursuant to this Agreement Consist of the Following Matching Resources for Federal Programs:					
Federal Program A	Federal Agency	CFDA	CFDA Title	Funding Amount	State Appropriation Category
Federal Program B	Federal Agency	CFDA	CFDA Title	Funding Amount	State Appropriation Category

Note: If the resources awarded to the recipient represent more than one state project, provide the same information shown below for each state project and show total state financial assistance awarded that is subject to section 215.97, F.S.

State Resources Awarded to the Recipient Pursuant to this Agreement Consist of the Following Resources Subject to Section 215.97, F.S.:						
State Program A	State Awarding Agency	State Fiscal Year[1]	CSFA Number	CSFA Title or Funding Source Description	Funding Amount	State Appropriation Category
Original Agreement	Florida Department of Environmental Protection	2019-2020	37.039	Statewide Surface Restoration and Wastewater Projects	$122,052	140047
Original Agreement	Florida Department of Environmental Protection	2021-2022	37.039	Statewide Water Quality Restoration Projects	$7,000,000	140047
Amendment No. 1	Florida Department of Environmental Protection	2022-2023	37.039	Statewide Water Quality Restoration Projects	$6,983,936	140047
Amendment No. 2	Florida Department of Environmental Protection	2023-2024	37.039	Statewide Water Quality Restoration Projects	$7,146,500	140047
State Program B	State Awarding Agency	State Fiscal Year[2]	CSFA Number	CSFA Title or Funding Source Description	Funding Amount	State Appropriation Category

Total Award	$21,252,488	

Note: List applicable compliance requirement in the same manner as illustrated above for federal resources. For matching resources provided by the Department for DEP for federal programs, the requirements might be similar to the requirements for the applicable federal programs. Also, to the extent that different requirements pertain to different amount for the non-federal resources, there may be more than one grouping (i.e. 1, 2, 3, etc.) listed under this category.

For each program identified above, the recipient shall comply with the program requirements described in the Catalog of Federal Domestic Assistance (CFDA) [https://sam.gov/content/assistance-listings] and/or the Florida Catalog of State Financial Assistance (CSFA) [https://apps.fldfs.com/fsaa/searchCatalog.aspx], and State Projects Compliance Supplement (Part Four: State Projects Compliance Supplement [https://apps.fldfs.com/fsaa/state_project_compliance.aspx]. The services/purposes for which the funds are to be used are included in the Agreement's Grant Work Plan. Any match required by the Recipient is clearly indicated in the Agreement.

[1] Subject to change by Change Order.
[2] Subject to change by Change Order.

AMENDMENT NO. 3
TO AGREEMENT NO. LPA0212
BETWEEN
FLORIDA DEPARTMENT OF ENVIRONMENTAL PROTECTION
AND
POLK REGIONAL WATER COOPERATIVE

This Amendment to Agreement No. LPA0212 (Agreement), as previously amended, is made by and between the Department of Environmental Protection (Department), an agency of the State of Florida, and the Polk Regional Water Cooperative (Grantee), on the date last signed below.

WHEREAS, the Department entered into the Agreement with the Grantee for Polk Regional Water Cooperative Heartland Headwaters Protection and Sustainability (Project), effective July 28, 2022; and,

WHEREAS, $1,310,187.00 in additional funding for this Project is provided under Line Item 1732A of the 2024-2025 General Appropriations Act; and the total funding for this Agreement is now $22,562,675.00; and,

WHEREAS, the reimbursement period for the additional funding provided under Line Item 1732A of the 2024-2025 General Appropriations Act begins on July 1, 2024; and,

WHEREAS, the Grantee has requested a revision in the scope of work and a budget reallocation for the Project; and,

WHEREAS, the Grantee has requested to add a new task to the Grant Work Plan; and,

WHEREAS, an extension to the Agreement is needed to provide additional time to complete the Project; and,

WHEREAS, other changes to the Agreement are necessary; and,

WHEREAS, the parties have agreed to amend the Agreement as set forth herein.

NOW THEREFORE, the parties agree as follows:

1. Section 3. of the Standard Grant Agreement is hereby revised to change the Date of Expiration to December 31, 2026. The Department and the Grantee shall continue to perform their respective duties during this extension period pursuant to the same terms and conditions provided in the Agreement.

2. Section 5. of the Standard Grant Agreement is hereby revised to the following:

Total Amount of Funding:	**Funding Source?**	**Award #s or Line Item Appropriations:**	**Amount per Source(s):**
$22,562,675	☑ State ☐ Federal	LP, GAA LI 1657A, FY 19-20, GR	$122,052
	☑ State ☐ Federal	LP, GAA LI 1607A, FY 21-22, GR	$7,000,000
	☑ State ☐ Federal	LP, GAA LI 1665A, FY 22-23, GR	$6,983,936
	☑ State ☐ Federal	LP, GAA LI 1705A, FY 23-24, GR	$7,146,500
	☑ State ☐ Federal	LP, GAA LI 1732A, FY 24-25, GR	$1,310,187
	☐ Grantee Match		
		Total Amount of Funding + Grantee Match, if any:	$22,562,675

3. Attachment 3-2, Revised Grant Work Plan, is hereby deleted in its entirety and replaced with Attachment 3-3, Revised Grant Work Plan, as attached to this Amendment and hereby incorporated into the Agreement. All references in the Agreement to Attachment 3 shall hereinafter refer to Attachment 3-3, Revised Grant Work Plan.

REMAINDER OF PAGE INTENTIONALLY LEFT BLANK

4. Attachment 5-2, Revised Special Audit Requirements, is hereby deleted in its entirety and replaced with Attachment 5-3, Revised Special Audit Requirements, attached hereto and made a part of the Agreement. All references in the Agreement to Attachment 5 shall hereinafter refer to Attachment 5-3, Revised Special Audit Requirements.

5. Exhibit A, Progress Report Form, is hereby deleted in its entirety and replaced with Exhibit A-1, attached hereto and made a part of the Agreement. All references in the Agreement to Exhibit A shall hereinafter refer to Exhibit A-1.

6. All other terms and conditions of the Agreement remain in effect. If and to the extent that any inconsistency may appear between the Agreement and this Amendment, the provisions of this Amendment shall control.

REMAINDER OF PAGE INTENTIONALLY LEFT BLANK

The parties agree to the terms and conditions of this Amendment and have duly authorized their respective representatives to sign it on the dates indicated below.

POLK REGIONAL WATER COOPERATIVE

By: _____
Authorized Signature

Eric DeHaven, Executive Director
Print Name and Title

Date: 11/20/2024

STATE OF FLORIDA DEPARTMENT OF ENVIRONMENTAL PROTECTION

By: _____ Digitally signed by Angela Knecht Date: 2024.11.21 13:14:35 -05'00'
Secretary or Designee

Angela Knecht, Division Director
Print Name and Title

Date: _____

Nathan Jagoda Digitally signed by Nathan Jagoda Date: 2024.11.21 10:58:44 -05'00'
Nathan Jagoda, DEP Grant Manager

Michael Barr Digitally signed by Michael Barr Date: 2024.11.21 12:36:20 -05'00'
Michael Barr, DEP QC Reviewer

List of attachments/exhibits included as part of this Amendment:

Specify Type	Letter/ Number	Description
Attachment	3-3	Revised Grant Work Plan
Attachment	5-3	Revised Special Audit Requirements
Exhibit	A-1	Progress Report Form

ATTACHMENT 3-3
REVISED GRANT WORK PLAN

PROJECT TITLE: Polk Regional Water Cooperative Heartland Headwaters Protection and Sustainability

PROJECT LOCATION: The Project will be located within the service areas of the Polk Regional Water Cooperative (PRWC) (Grantee). The PRWC is made up of Polk County and 15 municipalities. The County seat is located in Bartow, Florida; with an approximate Lat/Long of 27.8940, -81.8512.

PROJECT BACKGROUND: In 2017, the Florida Legislature passed HB 573, better known as the Heartland Headwaters Protection and Sustainability Act (Chapter No. 2017-111, Laws of Florida). The Act statutorily recognizes the vital importance of those portions of the Green Swamp Area of Critical State Concern that lie within the jurisdictional bounds of Polk and Lake counties and designates Polk County's aquifers as the headwaters for six of Florida's major rivers: the Alafia, Hillsborough, Kissimmee, Ocklawaha, Peace, and Withlacoochee Rivers. Furthermore, it acknowledges the critical importance of Polk County's aquifers to the economic and ecological health of the surrounding regions. The Act declared that fostering partnerships between Regional Water Supply Authorities (RWSA) and local governments is in the state's interest.

For the purposes of fostering such partnerships, the Act requires that the PRWC prepare annual comprehensive reports listing projects that are needed to protect and restore the region's water resources, so that they may be considered for state funding. These funds were awarded to PRWC (Grantee); the following entities will work in conjunction with the Grantee on this project: Polk City, City of Eagle Lake, City of Winter Haven, City of Frostproof, Polk County.

Project No. 1 - PRWC West Polk Wellfield Lower Floridan Aquifer Project

PROJECT BACKGROUND: In order to meet growing water demands, the PRWC determined that multiple projects would be required to meet future demands. The West Polk project, which would utilize the deep, lower Floridan, brackish aquifer as a source, would serve as one project which could help meet demands in western Polk County. Use of the lower Floridan as a water supply is thought to be protective of the region's sensitive natural resources.

PROJECT DESCRIPTION: The Grantee will complete a well testing program and designs for a reverse osmosis treatment facility and associated piping to serve numerous communities in western Polk County. This Project includes acquisition of land for the testing and the construction of the raw water wellfield. This project also includes acquisition of land for the water production facility, injection wells, and pipeline alignments. Legal fees may also be incurred as a part of this process.

The Grantee does not anticipate that the funding under this Agreement will result in a fully completed project, so this Agreement will cover a portion of the work.

REMAINDER OF PAGE INTENTIONALLY LEFT BLANK

Project No. 2 Eagle Lake Wastewater Pump Station Replacement Project

PROJECT BACKGROUND: Lake McLeod and Eagle Lake exist within the Peace Creek Watershed, in which there is a TMDL for fecal coliform. The City of Eagle Lake plans to replace two wastewater pumping stations to prevent failures which have the potential to overflow sewage into the lakes.

PROJECT DESCRIPTION: The Grantee will complete the construction plan revision, bid document revisions, bidding and contractor selection, and the construction of two wastewater pumping stations and installation of emergency generators to replace aging existing pumping stations, one located at a park near Eagle Lake and one located in a low elevation area adjacent to Lake McLeod.

Project No. 3 - Winter Haven Septic to Sewer Program

PROJECT BACKGROUND: Nearly half of the 50 lakes in Winter Haven are on the impaired list for water quality due in part to septic tank loading. The City of Winter Haven serves a population of approximately 74,675, which includes 14,070 residences that are on septic systems. This project will design, permit and construct the first remediation area from the priority list identified in the Septic to Sewer Master Plan completed in January 2021. The Septic to Sewer Master Plan prioritizes and will subsequently eliminate some of the septic tank discharges by converting septic tanks to central sewer in a very high recharge area. The City of Winter Haven has completed a Septic to Sewer Master Plan in January 2021 which recommends priority areas for the conversion to sewer.

PROJECT DESCRIPTION: The Grantee will complete the design, permitting, and bidding services for a new public collection system, as well as on-site private septic system evaluations, connections to the new collection system, and septic tank decommissioning for approximately 125 residential and commercial accounts around East Lake Hartridge and US 17. They will also complete the construction of the collection system within the right-of-way in Remediation Area 6A and Boggy Bottom Area.

The Grantee does not anticipate that the funding under this Agreement will result in a fully completed project, so this Agreement will cover a portion of the work.

Project No. 4 - Frostproof Wastewater System Upgrades

PROJECT BACKGROUND: The City of Frostproof has prepared 90% design plans and technical specifications for the planned construction of a pretreatment/headworks system at its wastewater treatment plant. The City is also in the process of designing the expansion of its rapid infiltration basin (RIB) system for effluent disposal.

PROJECT DESCRIPTION: The Grantee will complete the design and construction of all components for the headworks, including the control panel, screen, compactor, grit system, stairs/walkway sensor, delivery, startup, training, permitting, and construction administration, as well as the design and construction of a rapid infiltration basin expansion and emergency generators for the lift station. The Grantee is anticipating to directly purchase the following materials:

- One 56 KW Generator and associated installation costs.
- One 30 KW Generator and associated installation costs.

The Grantee does not anticipate that the funding under this Agreement will result in a fully completed project, so this Agreement will cover a portion of the work.

REMAINDER OF PAGE INTENTIONALLY LEFT BLANK

Project No. 5 - Winter Haven ASR Wellfield

PROJECT BACKGROUND: The Winter Haven area is the headwaters for the Peace River which flows to Charlotte Harbor. This project is part of a larger One Water Master Plan to create green infrastructure projects, which provide water supply, water quality, flooding and natural system restoration. This project involves the design and construction of an aquifer storage and recovery (ASR) wellfield which would take excess surface water flow during flood events, store it in the lower Floridan aquifer, and then recover the water during drought events.

PROJECT DESCRIPTION: The Grantee will complete the design and construction of a roughly 1.5 MGD ASR well system to store excess water from the Peace Creek System for beneficial use, including a report on the Flow and Water Quality Data Summary and Analysis of available water sources and quantities and characterize water quality to determine treatment requirements, local hydrogeology, area features, and regulatory reviews, and well options screening evaluations.

The Grantee does not anticipate that the funding under this Agreement will result in a fully completed project, so this Agreement will cover a portion of the work.

Project No. 6 - Polk County AWS Receiving Facilities

PROJECT BACKGROUND: Polk County is a member of the PRWC and will receive regional alternative water supplies from the PRWC via the Southeast Wellfield Project. Polk County must design and construct a receiving station to facilitate the re-pumping to an AWS system in its Northeast Regional Utility Service Area (NERUSA).

PROJECT DESCRIPTION: The Grantee will complete the design of an alternative water supply storage and repump facility. The station will include an approximately 1 MGD storage tank, pumps, chemical feed, electrical equipment, generator, and associated equipment. This project includes land acquisition, designs, and permitting for the new facility.

The Grantee does not anticipate that the funding under this Agreement will result in a fully completed project, so this Agreement will cover a portion of the work.

Project No. 7 - Southeast Wellfield Lower Floridian Aquifer Project

PROJECT BACKGROUND: The Polk Regional Water Cooperative (PRWC) exists within the Central Florida Water Initiative area, a region of Florida identified as being limited in traditional water supply. This project is intended to help meet growing demands by utilizing the deep, lower Floridan, brackish aquifer as a source. Use of the lower Floridan as a water supply is thought to be protective of the region's sensitive natural resources.

PROJECT DESCRIPTION: The Grantee will acquire property or right of way for a 15 MGD reverse osmosis treatment facility, approximately 66 miles of transmission piping, and approximately 10 miles of raw water main and associated raw water wells. Legal fees may also be incurred as a part of this process.

REMAINDER OF PAGE INTENTIONALLY LEFT BLANK

Project No. 8 – Demand Management Plan Project

PROJECT BACKGROUND: Building on the recommendations memorialized in the 2020 Demand Management Plan, PRWC members are implementing conservation measures intended to lower potable demands by up to 5 MGD by 2040 through active conservation measures. This project will support those efforts, which are critical to compliance with the Central Florida Water Initiative Rulemaking and protecting the natural resources of the county. Example programs include low-flow toilet vouchers, irrigation audits, and conservation kits.

PROJECT DESCRIPTION: The Grantee will implement rebates for water-savings devices and irrigation evaluations to encourage residential water conservation.

TASKS: All documentation should be submitted electronically unless otherwise indicated, and should be submitted prior to the expiration of the grant agreement.

Task 1: Land Acquisition

Deliverables: The Grantee will acquire fee simple or less-than-fee simple interest on properties within the service areas of the PRWC. Costs related to pre-acquisition and acquisition will be reimbursable. The property interests will be held by PRWC after the acquisition is complete. The Grantee will complete the following:

- Project 1: Land acquisition of the raw water wells, wastewater plant, and pipeline for a 2.5 MGD facility.
- Project 6: Land acquisition for an alternative water supply storage and repump facility.
- Project 7: Land acquisition for a wastewater treatment facility, pipeline, and raw water wells for a 15 MGD facility.

Documentation: The Grantee will submit: 1) copies of all appraisals or written justification for why there is not an appraisal, as applicable; 2) the closing statement or all closing documents; 3) title exam/insurance; 4) property survey; 5) boundary map; and 6) the deed, recorded easement, or property interest, as applicable.

Performance Standard: The Department's Grant Manager will review the documentation to verify that the deliverables have been completed as described above. Upon review and written acceptance by the Department's Grant Manager, the Grantee may proceed with payment request submittal.

Payment Request Schedule: The Grantee may submit a payment request for cost reimbursement no more frequently than monthly.

REMAINDER OF PAGE INTENTIONALLY LEFT BLANK

Task 2: Preconstruction Activities

Deliverables: The Grantee will complete the following:

- Project 2: Design of the Eagle Lake wastewater pumping station and FDEP permit renewal.
- Project 3: Design of the Winter Haven Area 6A and Boggy Bottom Area public collection system.
- Project 4: Design of an expansion of Frostproof's rapid infiltration basin (RIB) system for effluent disposal.
- Project 5: Evaluation of the flow and water quality characteristics for the Winter Haven ASR wellfield.
- Project 6: Preliminary design report and design of the Polk County AWS receiving facilities.

Activities necessary for design, such as surveys, geotechnical evaluations, and environmental assessments, are eligible under this task.

Documentation: The Grantee will submit a signed summary of activities completed for the period of work covered in the payment request, including the percentage of design complete and permitting status, using the format provided by the Department's Grant Manager. For the final documentation, the Grantee will also submit a copy of the design completed with the funding provided for this task, a list of all required permits identifying issue dates and issuing authorities, and copies of any surveys, assessments, or other documents funded under this task. Upon request by the Department's Grant Manager, the Grantee will provide additional supporting documentation relating to this task. The Grantee will also submit the following:

- Project 2: Construction plans and renewed permit for the Eagle Lake wastewater pumping station.
- Project 3: Construction plans for the 6A and Boggy Bottom Area public collection system.
- Project 4: Construction plans for a pretreatment/headworks system.
- Project 5: Draft and final summary memoranda of the flow and water quality characteristics, local hydrogeology, and well options; Class V well construction permit application.
- Project 6: Preliminary design report and design documents for the Polk County AWS receiving facilities.

Performance Standard: The Department's Grant Manager will review the documentation to verify that the deliverables have been completed as described above. Upon review and written acceptance by the Department's Grant Manager, the Grantee may proceed with payment request submittal.

Payment Request Schedule: The Grantee may submit a payment request for cost reimbursement no more frequently than monthly.

REMAINDER OF PAGE INTENTIONALLY LEFT BLANK

Task 3: Bidding and Contractor Selection

Deliverables: The Grantee will complete the following:

- Project 2: Bidding documents for the Eagle Lake wastewater pump station.
- Project 4: City of Frostproof bidding documents for the headworks and RIB improvements.
- Project 6: Polk County AWS receiving facility bid documents.

Documentation: The Grantee will submit: 1) the public notice of advertisement for the bid; 2) the bid package; and 3) a written notice of selected contractor(s).

Performance Standard: The Department's Grant Manager will review the documentation to verify that the deliverables have been completed as described above. Upon review and written acceptance by the Department's Grant Manager, the Grantee may proceed with payment request submittal.

Payment Request Schedule: The Grantee may submit a payment request for cost reimbursement no more frequently than monthly.

Task 4: Construction

Deliverables: The Grantee will construct the following items in accordance with the construction contract documents.

- Project 2: City of Eagle Lake wastewater pumping station.
- Project 3: City of Winter Haven sewer collection system.
- Project 4: City of Frostproof headworks and RIB improvements.
- Project 5: City of Winter Haven ASR well construction.

Documentation: The Grantee will submit a signed summary of activities completed for the period of work covered in the payment request, using the format provided by the Department's Grant Manager. Upon request by the Department's Grant Manager, the Grantee will provide additional supporting documentation relating to this task.

Performance Standard: The Department's Grant Manager will review the documentation to verify that the deliverables have been completed as described above. Upon review and written acceptance by the Department's Grant Manager, the Grantee may proceed with payment request submittal.

Payment Request Schedule: The Grantee may submit a payment request for cost reimbursement no more frequently than monthly.

Budget Narrative: The Miscellaneous/other expenses budget category for this task will be used solely for the direct purchase and installation of generators for the Frostproof Wastewater System Upgrades project.

REMAINDER OF PAGE INTENTIONALLY LEFT BLANK

Task 5: Conservation Incentives

Deliverables: The Grantee (in cooperation with PRWC member governments) will provide rebates or contract services to eligible recipients for approximately 600 existing homes across Polk County for the purchase and/or installation of water saving technologies including some combination of the following: landscape and irrigation audits, rain sensors and smart controllers, toilet replacement rebates, and conservation kits for inside and outside the home. Completion of work will be through a combination of installation and rebates to consumers. The Grantee will complete the following:

- Project 8: Implementation of rebates for water-saving devices and irrigation audits.

Documentation: The Grantee will submit: 1) a signed acceptance of the completed work to date, as provided in the Grantee's Certification of Payment Request; 2) summary with a brief description of the work completed to date; 3) a list of addresses and types of the participating properties; and 4) proof of payments for item(s) installed and/or supplied, as evidenced by copies of invoices or rebate forms, as applicable.

Performance Standard: The Department's Grant Manager will review the documentation to verify that the deliverables have been completed as described above. Upon review and written acceptance by the Department's Grant Manager, the Grantee may proceed with payment request submittal.

Payment Request Schedule: The Grantee may submit a payment request for cost reimbursement no more frequently than monthly.

Task 6: Project Management

Deliverables: The Grantee will provide project management services related to Polk Regional Water Cooperative Heartland Headwaters Protection and Sustainability, to include review of documents and forms, budget oversight, preparation and submittal of quarterly progress reports, processing of payment requests and related documentation, field engineering services, construction observation, site meetings with construction contractor(s) and design professionals, and overall project coordination and supervision.

- Project 4: Project management services for the Frostproof Wastewater System Upgrades project.

Documentation: The Grantee will submit a signed summary of activities completed for the period of work covered in the payment request, using the format provided by the Department's Grant Manager. Upon request by the Department's Grant Manager, the Grantee will provide additional supporting documentation relating to this task.

Performance Standard: The Department's Grant Manager will review the documentation to verify that the deliverables have been completed as described above. Upon review and written acceptance by the Department's Grant Manager, the Grantee may proceed with payment request submittal.

Payment Request Schedule: The Grantee may submit a payment request for cost reimbursement no more frequently than monthly.

REMAINDER OF PAGE INTENTIONALLY LEFT BLANK

PROJECT TIMELINE & BUDGET DETAIL: The tasks must be completed by the corresponding task end date. Cost reimbursable grant funding must not exceed the budget amounts as indicated below.

For any Task with a Budget Category of Contractual Services, the Grantee shall submit a copy of the executed subcontract to the Department prior to submitting any invoices for subcontracted work.

Task No.	Task Title	Budget Category	Grant Amount	Task Start Date	Task End Date
1	Land Acquisition	Land Acquisition	$122,052 [1]	07/01/2019	06/30/2026
			$1,727,557	07/01/2021	06/30/2026
			$6,983,936	07/01/2022	06/30/2026
			$7,071,500	07/01/2023	06/30/2026
			$1,235,187	07/01/2024	06/30/2026
2	Preconstruction Activities	Contractual Services	$826,198	07/01/2021	06/30/2026
3	Bidding and Contractor Selection	Contractual Services	$118,342	07/01/2021	06/30/2026
4	Construction	Contractual Services	$3,964,430	07/01/2021	06/30/2026
		Miscellaneous/ Other Expenses	$216,647	07/01/2021	06/30/2026
5	Conservation Incentives	Contractual Services	$150,000	07/01/2023	06/30/2026
6	Project Management	Contractual Services	$146,826	07/01/2021	06/30/2026
		Total:	$22,562,675		

[1]$122,052 of funding provided under Line Item 1657A of the FY19-20 General Appropriations Act will go toward Land Acquisition for Project 1. The remaining funding in this Task may go toward Land Acquisition for Projects 1, 6, or 7.

Note that, per Section 8.h. of Attachment 1 in the Agreement, authorization for continuation and completion of work and any associated payments may be rescinded, with proper notice, at the discretion of the Department if the Legislature reduces or eliminates appropriations. Extending the contract end date carries the risk that funds for this project may become unavailable in the future. This should be a consideration for the Grantee with this and future requests for extension.

STATE OF FLORIDA
DEPARTMENT OF ENVIRONMENTAL PROTECTION
Revised Special Audit Requirements
(State and Federal Financial Assistance)

Attachment 5-3

The administration of resources awarded by the Department of Environmental Protection *(which may be referred to as the "Department", "DEP", "FDEP" or "Grantor", or other name in the agreement*) to the recipient *(which may be referred to as the "Recipient", "Grantee" or other name in the agreement)* may be subject to audits and/or monitoring by the Department of Environmental Protection, as described in this attachment.

MONITORING

In addition to reviews of audits conducted in accordance with 2 CFR Part 200, Subpart F-Audit Requirements, and Section 215.97, F.S., as revised (see "AUDITS" below), monitoring procedures may include, but not be limited to, on-site visits by DEP Department staff, limited scope audits as defined by 2 CFR 200.425, or other procedures. By entering into this Agreement, the recipient agrees to comply and cooperate with any monitoring procedures/processes deemed appropriate by the Department of Environmental Protection. In the event the Department of Environmental Protection determines that a limited scope audit of the recipient is appropriate, the recipient agrees to comply with any additional instructions provided by the Department to the recipient regarding such audit. The recipient further agrees to comply and cooperate with any inspections, reviews, investigations, or audits deemed necessary by the Chief Financial Officer (CFO) or Auditor General.

AUDITS

PART I: FEDERALLY FUNDED

This part is applicable if the recipient is a State or local government or a non-profit organization as defined in 2 CFR §200.330

1. A recipient that expends $1,000,000 or more in Federal awards in its fiscal year, must have a single or program-specific audit conducted in accordance with the provisions of 2 CFR Part 200, Subpart F. EXHIBIT 1 to this Attachment indicates Federal funds awarded through the Department of Environmental Protection by this Agreement. In determining the federal awards expended in its fiscal year, the recipient shall consider all sources of federal awards, including federal resources received from the Department of Environmental Protection. The determination of amounts of federal awards expended should be in accordance with the guidelines established in 2 CFR 200.502-503. An audit of the recipient conducted by the Auditor General in accordance with the provisions of 2 CFR Part 200.514 will meet the requirements of this part.

2. For the audit requirements addressed in Part I, paragraph 1, the recipient shall fulfill the requirements relative to auditee responsibilities as provided in 2 CFR 200.508-512.

3. A recipient that expends less than $1,000,000 in federal awards in its fiscal year is not required to have an audit conducted in accordance with the provisions of 2 CFR Part 200, Subpart F-Audit Requirements. If the recipient expends less than $1,000,000 in federal awards in its fiscal year and elects to have an audit conducted in accordance with the provisions of 2 CFR 200, Subpart F-Audit Requirements, the cost of the audit must be paid from non-federal resources (i.e., the cost of such an audit must be paid from recipient resources obtained from other federal entities.

4. The recipient may access information regarding the Catalog of Federal Domestic Assistance (CFDA) via the internet at https://sam.gov/content/assistance-listings.

PART II: STATE FUNDED

This part is applicable if the recipient is a nonstate entity as defined by Section 215.97(2), Florida Statutes.

1. In the event that the recipient expends a total amount of state financial assistance equal to or in excess of $750,000 in any fiscal year of such recipient (for fiscal years ending June 30, 2017, and thereafter), the recipient must have a State single or project-specific audit for such fiscal year in accordance with Section 215.97, F.S.; Rule Chapter 69I-5, F.A.C., State Financial Assistance; and Chapters 10.550 (local governmental entities) or 10.650 (nonprofit and for-profit organizations), Rules of the Auditor General. EXHIBIT 1 to this form lists the state financial assistance awarded through the Department of Environmental Protection by this agreement. In determining the state financial assistance expended in its fiscal year, the recipient shall consider all sources of state financial assistance, including state financial assistance received from the Department of Environmental Protection, other state agencies, and other nonstate entities. State financial assistance does not include federal direct or pass-through awards and resources received by a nonstate entity for Federal program matching requirements.

2. In connection with the audit requirements addressed in Part II, paragraph 1; the recipient shall ensure that the audit complies with the requirements of Section 215.97(8), Florida Statutes. This includes submission of a financial reporting package as defined by Section 215.97(2), Florida Statutes, and Chapters 10.550 (local governmental entities) or 10.650 (nonprofit and for-profit organizations), Rules of the Auditor General.

3. If the recipient expends less than $750,000 in state financial assistance in its fiscal year (for fiscal year ending June 30, 2017, and thereafter), an audit conducted in accordance with the provisions of Section 215.97, Florida Statutes, is not required. In the event that the recipient expends less than $750,000 in state financial assistance in its fiscal year, and elects to have an audit conducted in accordance with the provisions of Section 215.97, Florida Statutes, the cost of the audit must be paid from the non-state entity's resources (i.e., the cost of such an audit must be paid from the recipient's resources obtained from other than State entities).

4. For information regarding the Florida Catalog of State Financial Assistance (CSFA), a recipient should access the Florida Single Audit Act website located at https://apps.fldfs.com/fsaa for assistance. In addition to the above websites, the following websites may be accessed for information: Legislature's Website at http://www.leg.state.fl.us/Welcome/index.cfm, State of Florida's website at http://www.myflorida.com/, Department of Financial Services' Website at http://www.fldfs.com/and the Auditor General's Website at http://www.myflorida.com/audgen/.

PART III: OTHER AUDIT REQUIREMENTS

(NOTE: This part would be used to specify any additional audit requirements imposed by the State awarding entity that are solely a matter of that State awarding entity's policy (i.e., the audit is not required by Federal or State laws and is not in conflict with other Federal or State audit requirements). Pursuant to Section 215.97(8), Florida Statutes, State agencies may conduct or arrange for audits of State financial assistance that are in addition to audits conducted in accordance with Section 215.97, Florida Statutes. In such an event, the State awarding agency must arrange for funding the full cost of such additional audits.)

PART IV: REPORT SUBMISSION

1. Copies of reporting packages for audits conducted in accordance with 2 CFR Part 200, Subpart F-Audit Requirements, and required by PART I of this form shall be submitted, when required by 2 CFR 200.512, by or on behalf of the recipient directly to the Federal Audit Clearinghouse (FAC) as provided in 2 CFR 200.36 and 200.512

   A. The Federal Audit Clearinghouse designated in 2 CFR §200.501(a) (the number of copies required by 2 CFR §200.501(a) should be submitted to the Federal Audit Clearinghouse), at the following address:

By Mail:

Federal Audit Clearinghouse
Bureau of the Census
1201 East 10th Street
Jeffersonville, IN 47132

Submissions of the Single Audit reporting package for fiscal periods ending on or after January 1, 2008, must be submitted using the Federal Clearinghouse's Internet Data Entry System which can be found at http://harvester.census.gov/facweb/

2. Copies of financial reporting packages required by PART II of this Attachment shall be submitted by or on behalf of the recipient directly to each of the following:

A. The Department of Environmental Protection at one of the following addresses:

By Mail:
Audit Director
Florida Department of Environmental Protection
Office of Inspector General, MS 40
3900 Commonwealth Boulevard
Tallahassee, Florida 32399-3000

Electronically:
FDEPSingleAudit@dep.state.fl.us

B. The Auditor General's Office at the following address:

Auditor General
Local Government Audits/342
Claude Pepper Building, Room 401
111 West Madison Street
Tallahassee, Florida 32399-1450

The Auditor General's website (http://flauditor.gov/) provides instructions for filing an electronic copy of a financial reporting package.

3. Copies of reports or management letters required by PART III of this Attachment shall be submitted by or on behalf of the recipient directly to the Department of Environmental Protection at one of the following addresses:

By Mail:
Audit Director
Florida Department of Environmental Protection
Office of Inspector General, MS 40
3900 Commonwealth Boulevard
Tallahassee, Florida 32399-3000

Electronically:
FDEPSingleAudit@dep.state.fl.us

4. Any reports, management letters, or other information required to be submitted to the Department of Environmental Protection pursuant to this Agreement shall be submitted timely in accordance with 2 CFR 200.512, section 215.97, F.S., and Chapters 10.550 (local governmental entities) or 10.650 (nonprofit and for-profit organizations), Rules of the Auditor General, as applicable.

5. Recipients, when submitting financial reporting packages to the Department of Environmental Protection for audits done in accordance with 2 CFR 200, Subpart F-Audit Requirements, or Chapters 10.550 (local governmental entities) and 10.650 (non and for-profit organizations), Rules of the Auditor General, should indicate the date and the reporting package was delivered to the recipient correspondence accompanying the reporting package.

PART V: RECORD RETENTION

The recipient shall retain sufficient records demonstrating its compliance with the terms of the award and this Agreement for a period of **five (5)** years from the date the audit report is issued, and shall allow the Department of Environmental Protection, or its designee, Chief Financial Officer, or Auditor General access to such records upon request. The recipient shall ensure that audit working papers are made available to the Department of Environmental Protection, or its designee, Chief Financial Officer, or Auditor General upon request for a period of **three (3)** years from the date the audit report is issued, unless extended in writing by the Department of Environmental Protection.

EXHIBIT – 1

FUNDS AWARDED TO THE RECIPIENT PURSUANT TO THIS AGREEMENT CONSIST OF THE FOLLOWING:

Note: If the resources awarded to the recipient represent more than one federal program, provide the same information shown below for each federal program and show total federal resources awarded

Federal Resources Awarded to the Recipient Pursuant to this Agreement Consist of the Following:					
Federal Program A	Federal Agency	CFDA Number	CFDA Title	Funding Amount	State Appropriation Category
				$	
Federal Program B	Federal Agency	CFDA Number	CFDA Title	Funding Amount	State Appropriation Category
				$	

Note: Of the resources awarded to the recipient represent more than one federal program, list applicable compliance requirements for each federal program in the same manner as shown below:

Federal Program A	First Compliance requirement: i.e.: (what services of purposes resources must be used for)	
	Second Compliance requirement: i.e.:(eligibility requirement for recipients of the resources)	
	Etc.	
	Etc.	
Federal Program B	First Compliance requirement: i.e.: (what services of purposes resources must be used for)	
	Second Compliance requirement: i.e.: (eligibility requirement for recipients of the resources)	
	Etc.	
	Etc.	

Note: If the resources awarded to the recipient for matching represent more than one federal program, provide the same information shown below for each federal program and show total state resources awarded for matching.

State Resources Awarded to the Recipient Pursuant to this Agreement Consist of the Following Matching Resources for Federal Programs:					
Federal Program A	Federal Agency	CFDA	CFDA Title	Funding Amount	State Appropriation Category
Federal Program B	Federal Agency	CFDA	CFDA Title	Funding Amount	State Appropriation Category

Note: If the resources awarded to the recipient represent more than one state project, provide the same information shown below for each state project and show total state financial assistance awarded that is subject to section 215.97, F.S.

State Resources Awarded to the Recipient Pursuant to this Agreement Consist of the Following Resources Subject to Section 215.97, F.S.:						
State Program A	State Awarding Agency	State Fiscal Year[1]	CSFA Number	CSFA Title or Funding Source Description	Funding Amount	State Appropriation Category
Original Agreement	Florida Department of Environmental Protection	2019-2020	37.039	Statewide Surface Restoration and Wastewater Projects	$122,052	140047
Original Agreement	Florida Department of Environmental Protection	2021-2022	37.039	Statewide Water Quality Restoration Projects	$7,000,000	140047
Amendment No. 1	Florida Department of Environmental Protection	2022-2023	37.039	Statewide Water Quality Restoration Projects	$6,983,936	140047
Amendment No. 2	Florida Department of Environmental Protection	2023-2024	37.039	Statewide Water Quality Restoration Projects	$7,146,500	140047
Amendment No. 3	Florida Department of Environmental Protection	2024-2025	37.039	Statewide Water Quality Restoration Projects	$1,310,187	140047
State Program B	State Awarding Agency	State Fiscal Year[2]	CSFA Number	CSFA Title or Funding Source Description	Funding Amount	State Appropriation Category

Total Award	$22,562,675	

[1] Subject to change by Change Order.
[2] Subject to change by Change Order.

Note: List applicable compliance requirement in the same manner as illustrated above for federal resources. For matching resources provided by the Department for DEP for federal programs, the requirements might be similar to the requirements for the applicable federal programs. Also, to the extent that different requirements pertain to different amount for the non-federal resources, there may be more than one grouping (i.e. 1, 2, 3, etc.) listed under this category.

For each program identified above, the recipient shall comply with the program requirements described in the Catalog of Federal Domestic Assistance (CFDA) [https://sam.gov/content/assistance-listings] and/or the Florida Catalog of State Financial Assistance (CSFA) [https://apps.fldfs.com/fsaa/searchCatalog.aspx], and State Projects Compliance Supplement (Part Four: State Projects Compliance Supplement [https://apps.fldfs.com/fsaa/state_project_compliance.aspx]. The services/purposes for which the funds are to be used are included in the Agreement's Grant Work Plan. Any match required by the Recipient is clearly indicated in the Agreement.

STATE OF FLORIDA
DEPARTMENT OF ENVIRONMENTAL PROTECTION

Exhibit A-1
Progress Report Form

The current **Exhibit A, Progress Report Form** for this grant can be found on the Department's website at this link:

https://floridadep.gov/wra/wra/documents/progress-report-form

Please use the most current form found on the website, linked above, for each progress report submitted for this project.

DATE: February 24, 2025

TO: Honorable Mayor and City Commissioners

VIA: T. Michael Stavres, City Manager
M.J. Carnevale, Deputy City Manager

FROM: Gary M. Hubbard, Water Department Director

SUBJECT: Approval of Task Order #1 of the Water Resource Facility at Pollard Road and Wastewater Treatment Plant #2 Abandonment, to Wharton-Smith, Inc.

BACKGROUND

On March 6, 2024, the City of Winter Haven issued a Request for Qualifications, RFQ-24-18, for the Progressive Design-Build of the Water Resource Facility at Pollard Road and Wastewater Treatment Plant #2 Abandonment.

On July 22, 2024, the City Commission authorized the negotiation of a contract with Wharton-Smith, Inc. The multi-year project will involve the phased upgrade of WWTP #3, the conveyance of wastewater flows from WWTP #2 to WWTP #3, the decommissioning of WWTP #2, and the construction of a 12 million gallons per day (MGD) water resource facility (WRF) with future expansion capabilities up to 24 MGD.

Task Order #1 encompasses the preliminary design, design, and initial construction phases of the project. This includes 11 key tasks for facility planning and conceptual design, with an estimated cost of $9,934,177. An additional $2,000,000.00 is allocated as an allowance to achieve substantial completion of architectural and engineering work necessary for any critical components of the City's existing systems identified as necessary to continuously operate and maintain in the interim period. This will provide the foundation for "early out" construction packages, preliminary/final design, and documents required for funding opportunities.

Subsequent Task Orders will be prepared based on Task Order #1 findings and brought to City Commission for presentation and approval.

FINANCIAL IMPACT

The project is included in the Water Department's five-year Capital Improvement Plan and is budgeted for Fiscal Year 2024/2025 and subsequent years in accounts 402-08-316-6301 and 402-08-323-6301. The total cost with allowances is $11,934,177.00 and it is estimated to take 18 months to complete.

STRATEGIC PLAN ALIGNMENT

- Pillar: Infrastructure
- Goal: 3.3 – Ensure an actionable strategy is in place for the future of water resources.
- Strategy: 3.3.1 – Adopt, implement, and maintain the One Water Master Plan to ensure sufficient capacity for potable, reuse and wastewater needs.

RECOMMENDATION

Staff recommends the City Commission approve Task Order # 1: Initial Conception Planning and Design-Preconstruction Services to Wharton-Smith, Inc. and authorize the City Manager, or his designee, to take any and all actions necessary related thereto.

ATTACHMENT

- Water Resource Facility - Task Order 1, Initial Conception Planning and Design-Preconstruction Services

PRECONSTRUCTION PHASE PROPOSAL

CITY OF WINTER HAVEN

POLLARD RD. WRF

TASK ORDER 1: INITIAL CONCEPTUAL PLANNING AND DESIGN – PRECONSTRUCTION SERVICES

The following narrative is to provide detail to *Task Order 1: Initial Conceptual Planning and Design – Preconstruction Services* for the POLLARD RD. WRF project. The duration of Task 1 is assumed to be approximately 18 months for Conceptual Planning and Design.

This Task Order, which is detailed in the Kimley-Horn attachment, is the first Task Order for this contract which encompasses Conceptual Planning and Design efforts. In addition to the efforts outlined in the Kimley-Horn attachment, Wharton-Smith will provide the services detailed herein, and generally described below:

- Provide management of the design team and design related tasks
- Attend periodic design meetings to provide consultation on aspects of the design and construction that will impact the budget, schedule, and quality of the completed Work.
- Review of Conceptual Planning and Design phase deliverables and provide conceptual level cost estimates.
- Assist the City and design team in presenting and considering options and alternates by assessing cost and schedule impact of these options and alternates.
- Consult with Owner regarding site use and improvements, and the selection of materials, building systems, and equipment.
- Attend Site Visits at multiple sites, as needed, to facilitate the conceptual design phase
- Create and periodically update design-phase schedules and generate conceptual level construction phase schedules based on conceptual planning level documents.
- Provide input to the Owner regarding current construction market, bidding climate, status of key Subcontractor and Supplier markets, and other local economic conditions. Develop Subcontractor and Supplier interest in the Work, consistent with Legal Requirements. Furnish Owner a list of suggested Subcontractors and Suppliers, from whom bids will be requested for each principal portion of the Work. Submission of this list is for information and discussion purposes only and not for prequalification.

- In conjunction with the Owner, identify the appropriate early work packages including procurement of long-lead time items and equipment and other Work required to meet the schedule for the Owner.

- Generate conceptual level MOPO's (Maintenance of Plant Operations) to assist with cost estimating and decision making for alternative evaluations.

Design-Builder shall, through prudent use of resources, endeavor to minimize the use of contingency allowances and contractually limited services and Design-Builder shall be responsible for any use of consultants and subconsultants in excess of allowed amounts or contractual limits.

The following breakdown lists the anticipated tasks and expectations considered when producing the preconstruction proposal. Any work outside of this scope of work that is requested of Wharton-Smith by the Owner, shall be submitted in the form of a 'Request for Quotation' for review and approval prior to such work taking place.

Any reference to the design team shall be interpreted as Kimley-Horn and their subcontract designers.

Following this narrative is a detailed scope of design deliverables from Kimley-Horn, a breakdown of the preconstruction and design phase services provided by Wharton-Smith and a further breakdown of the subtasks to be performed by the design team. An anticipated conceptual design phase scope has also been included.

This Task Order is subordinate to the general terms and conditions of the Master Progressive Design-Build Contract Between the City of Winter Haven, a Florida municipal corporation, and Wharton-Smith, Inc. and shall be interpreted in a complimentary manner to the Contract Documents.

All Work performed by the Design Bulder on this Task Order shall be in compliance with the Design Criteria Package.

For each Work product, deliverable, or item assigned to Design-Builder by this Task Order other than Task 11 – Accelerated Design, the Work assigned by this Task Order constitutes a conceptual planning tool and a preliminary part of the Design Phase for each Project component. Therefore, when Work on an individual Work product, deliverable, or item assigned by this Task Order is complete, further Work on the Project component shall be suspended until a new Task Order is issued by the City.

TASK 1 PROJECT MANAGEMENT / DATA COLLECTION

This task generally consists of all management related tasks related to keeping the overall project moving forward. This includes coordination meetings with all of the design consultants, workshops with the City, project scheduling, document management, and billings.

1.1. Project Kickoff Meeting / Team Chartering Workshop – Wharton-Smith staff will attend one (1) Project Kickoff Meeting / Team Chartering Workshop with City of Winter Haven (Owner) and Kimley-Horn (Engineer).

1.2. Design Element Meetings – Wharton-Smith staff will attend design element meetings with City of Winter Haven (Owner) and Kimley-Horn (Engineer).

1.3. Bi-Weekly Progress Meetings – Wharton-Smith staff will attend bi-weekly progress meetings with City of Winter Haven and Kimley-Horn as necessary to review design progress, action items, and other outstanding items.

1.4. Bi-Weekly Design-Build Meetings – Wharton-Smith staff will host bi-weekly meetings with Kimley-Horn & Subconsultants as necessary to review internal design progress milestones, action items, and other outstanding items.

1.5. Document Management – Wharton-Smith staff will maintain project records, organize deliverables, and generally establish file management throughout the duration of this task order.

1.6. Project Management & Administration – Wharton-Smith provides overall project management for the preconstruction phase. This includes budget control, schedule control, quality planning, safety planning, subcontractor management, and coordination with the Owner and the Engineer.

1.7. Site Visits & Investigation – Wharton-Smith will perform general site visits as required to support the design team.

1.8. Equipment Vendor Meetings – Wharton-Smith will facilitate, in conjunction with Kimley-Horn, meetings with equipment vendors to assist in selection of major process equipment for this project.

1.9. Schedule Development and Phasing – Wharton-Smith will develop a baseline Critical Path Method (CPM) schedule using Primavera P6 software based on available information. This schedule will be utilized to manage the Task 1 phase work and to forecast completion of the overall design phase for the project.

1.10. Funding Assistance – Wharton-Smith staff will produce funding source specific estimate formats and schedules. This will be produced to coincide with the specific requirements of the funding agency, phasing, or project requirements.

1.11. Design Scope – Please reference the attached Kimley-Horn Scope Document

TASK 2 POLLARD ROAD WRF PLAN

This task includes the conceptual design elements to construct a new greenfield facility adjacent to the existing WWTP #3. It includes site development assessment, site visits, alternate evaluations, workshops, schedules, cost estimates, construction phasing, and a final Technical Memorandum for use in the CIP.

2.1. Deliverable Reviews – Wharton-Smith staff will review all deliverables prepared by the design team. Where applicable Wharton-Smith will provide the design team with the necessary information to complete their deliverables, including constructability reviews, value engineering, identification of conflicts, general questions, and sequencing feedback.

2.2. Alternative Analysis Costing – Wharton-Smith preconstruction staff will perform cost evaluations on design alternatives. Where applicable detailed takeoffs (based on drawing concepts) on all construction trades such as site work, concrete, process equipment, utilities, mechanical, building, finishes, etc. will be completed. A cost estimate will be provided showing all material, labor, and equipment take-offs and any subcontractor cost estimates used to generate the alternative costs will be provided.

2.3. Facility Plan Conceptual Estimate – Wharton-Smith preconstruction staff will prepare a conceptual cost estimate based off the Schematic Design Report documents.

2.4. Conceptual Schedule Development and Phasing – At the conceptual design phase, Wharton-Smith will develop a baseline Critical Path Method (CPM) schedule using Primavera P6 software based on available information (and providing reasonable allowances for Owner review time and time for permits and approvals from governmental agencies). The schedule will be broken down by phase (design/permitting, procurement, construction, and closeout) and by structure. A detailed schedule sequence will be provided for each structure. All portions of the project will be interrelated by schedule logic so that a true "critical path" is easily identifiable. This schedule will be updated as the project progresses.

2.5. Workshops – Wharton-Smith will attend task specific workshops for the Pollard Road WRF deliverables, cost estimating, and decision making.

2.6. Design Scope – Please reference the attached Kimley-Horn Scope Document

TASK 3 WATER CAMPUS VISIONING

This task includes the conceptual design elements to construct a new Water Campus on the property adjacent to the existing WRF #3. It includes site development assessment, site visits, alternate evaluations, workshops, schedules, cost estimates, construction phasing, and a final Technical Memorandum for use in the CIP.

3.1. Deliverable Reviews – Wharton-Smith staff will review all deliverables prepared by the design team. Where applicable Wharton-Smith will provide the design team with the necessary information to complete their deliverables, including constructability reviews, value engineering, identification of conflicts, general questions, and sequencing feedback.

3.2. Alternative Analysis Costing – Wharton-Smith preconstruction staff will perform cost evaluations on design alternatives. Where applicable detailed takeoffs (based on drawing concepts) on all construction trades such as site work, concrete, process equipment, utilities, mechanical, building, finishes, etc. will be completed. A cost estimate will be provided showing all material, labor, and equipment take-offs and any subcontractor cost estimates used to generate the alternative costs will be provided.

3.3. Facility Plan Conceptual Estimate – Wharton-Smith preconstruction staff will prepare a conceptual cost estimate based off the Schematic Design Report documents.

3.4. Conceptual Schedule Development and Phasing – At the conceptual design phase, Wharton-Smith will develop a baseline Critical Path Method (CPM) schedule using Primavera P6 software based on available information (and providing reasonable allowances for Owner review time and time for permits and approvals from governmental agencies). The schedule will be broken down by phase (design/permitting, procurement, construction, and closeout) and by structure. A detailed schedule sequence will be provided for each structure. All portions of the project will be interrelated by schedule logic so that a true "critical path" is easily identifiable. This schedule will be updated as the project progresses.

3.5. Workshops – Wharton-Smith will attend Tasks specific workshops for the Water Campus Visioning deliverables, cost estimating, and decision making.

3.6. Design Scope – Please reference the attached Kimley-Horn Scope Document

TASK 4 12" FM ASSESSMENT

This task generally is for evaluating the condition of the existing force main between WWTP #2 and WRF #3. This information will be used as part of the Task 5 alternatives analysis.

4.1. Condition Assessment Site Visits – Wharton-Smith staff will attend site visits with the design team and owner as needed to properly evaluate the existing site conditions. Site visits may be necessary for evaluations during cost estimating and for collaboration with sub trades to assist with making design decisions.

4.2. Condition Assessment Deliverables Reviews – Wharton-Smith staff will review all deliverables prepared by the design team. Where applicable Wharton-Smith will provide the design team with the necessary information to complete their deliverables, including constructability reviews, value engineering, identification of conflicts, general questions, and sequencing feedback.

4.3. Design Scope – Please reference the attached Kimley-Horn Scope Document

TASK 5 WWTP #2 TO WWTP #3 FORCE MAIN ALTERNATIVES

This task generally is for updating the existing wastewater system model to accommodate the decommissioning on WWTP #2 so that alternatives for moving flows from WWTP #2 to WWTP #3. The

alternatives will be evaluated on a high level so that two recommendations can be presented and utilized in the overall CIP.

5.1. Force Main Alternative Analysis Costing – Wharton-Smith preconstruction staff will perform cost evaluations on design alternatives. Where applicable detailed takeoffs (based on drawing concepts) on all construction trades such as site work, concrete, process equipment, utilities, mechanical, building, finishes, etc. will be completed. A cost estimate will be provided showing all material, labor, and equipment take-offs and any subcontractor cost estimates used to generate the alternative costs will be provided.

5.2. Force Main Alternatives Deliverable Reviews – Wharton-Smith staff will review all deliverables prepared by the design team. Where applicable Wharton-Smith will provide the design team with the necessary information to complete their deliverables, including constructability reviews, value engineering, identification of conflicts, general questions, and sequencing feedback.

5.3. Force Main Route Recommendations Deliverable Review – Wharton-Smith staff will review all deliverables prepared by the design team. Where applicable Wharton-Smith will provide the design team with the necessary information to complete their deliverables, including constructability reviews, value engineering, identification of conflicts, general questions, and sequencing feedback.

5.4. Force Main Route Conceptual Cost Analysis – Wharton-Smith preconstruction staff will prepare a conceptual cost analysis based off the Schematic Design Report documents for the recommended alternatives, taking into account route specific concerns and risks.

5.5. Site Visits – Wharton-Smith will accompany the design team to site visits to provide constructability feedback for the route options.

5.6. Design Scope – Please reference the attached Kimley-Horn Scope Document.

TASK 6 WWTP #2 DECOMMISSIONING & TRANSFER PUMP STATION MASTER PLAN

This task generally is for the evaluation of the existing infrastructure at WWTP #2 to determine what improvements will need to be made ahead of transitioning flow to WRF #3. It will also include a conceptual layout of the new Transfer Pump Station for use in the final CIP.

6.1. Condition Assessment Deliverable Reviews – Wharton-Smith staff will review all deliverables prepared by the design team. Where applicable Wharton-Smith will provide the design team with the necessary information to complete their deliverables, including constructability reviews, value engineering, identification of conflicts, general questions, and sequencing feedback.

6.2. Recommendations Cost Analysis – Wharton-Smith preconstruction staff will perform cost evaluations on design alternatives. Where applicable detailed takeoffs (based on drawing concepts) on all construction trades such as site work, concrete, process equipment, utilities, mechanical, building, finishes, etc. will be completed. A cost estimate will be provided showing all material, labor, and equipment takeoffs and any subcontractor cost estimates used to generate the alternative costs will be provided.

6.3. Recommendations Deliverable Reviews – Wharton-Smith staff will review all deliverables prepared by the design team. Where applicable Wharton-Smith will provide the design team with the necessary information to complete their deliverables, including constructability reviews, value engineering, identification of conflicts, general questions, and sequencing

6.4. Workshops – Wharton-Smith will attend Tasks specific workshops for the Water Campus Visioning deliverables, cost estimating, and decision making.

6.5. Conceptual Schedule Development and Phasing – At the conceptual design phase, Wharton-Smith will develop a baseline Critical Path Method (CPM) schedule using Primavera P6 software based on available information (and providing reasonable allowances for Owner review time and time for permits and approvals from governmental agencies). The schedule will be broken down by phase (design/permitting, procurement, construction, and closeout) and by structure. A detailed schedule sequence will be provided for each structure. All portions of the project will be interrelated by schedule logic so that a true "critical path" is easily identifiable. This schedule will be updated as the project progresses.

6.6. Site Visits – Wharton-Smith will accompany the design team to site visits to provide constructability feedback for the route options.

6.7. Conceptual MOPOs – Wharton-Smith staff will work with the City and design team to understand the existing plant operational constraints so that MOPOs can be evaluated when considering design alternatives. These will allow alternative and conceptual estimates to include the pricing associated with maintaining plant operations.

6.8. Design Scope – Please reference the attached Kimley-Horn Scope Document

TASK 7 WWTP #2 RECLAIMED WATER TRANSMISSION ALTERNATIVES EVALUATION

This task generally is for evaluating the existing reclaimed water system. It will look at meeting current and future pressure needs and how to transfer reclaimed water from WWTP #3 to the storage tanks at WWTP #2.

7.1. Condition Assessment Deliverable Reviews – Wharton-Smith staff will review all deliverables prepared by the design team. Where applicable Wharton-Smith will provide the design team with the necessary information to complete their deliverables, including constructability reviews, value engineering, identification of conflicts, general questions, and sequencing feedback.

7.2. Recommendations Cost Analysis – Wharton-Smith preconstruction staff will perform cost evaluations on design alternatives. Where applicable detailed takeoffs (based on drawing concepts) on all construction trades such as site work, concrete, process equipment, utilities, mechanical, building, finishes, etc. will be completed. A cost estimate will be provided showing all material, labor, and equipment takeoffs and any subcontractor cost estimates used to generate the alternative costs will be provided.

7.3. Reclaimed Water MPS Alternatives Deliverable Reviews – Wharton-Smith staff will review all deliverables prepared by the design team. Where applicable Wharton-Smith will provide the design team with the necessary information to complete their deliverables, including constructability reviews, value engineering, identification of conflicts, general questions, and sequencing feedback.

7.4. Reclaimed Water MPS Conceptual Estimate – Wharton-Smith preconstruction staff will prepare a conceptual cost estimate based off the Schematic Design Report documents.

7.5. Workshops – Wharton-Smith will attend Tasks specific workshops for the Water Campus Visioning deliverables, cost estimating, and decision making.

7.6. Conceptual Schedule Development and Phasing – At the conceptual design phase, Wharton-Smith will develop a baseline Critical Path Method (CPM) schedule using Primavera P6 software based on available information (and providing reasonable allowances for Owner review time and time for permits and approvals from governmental agencies). The schedule will be broken down by phase (design/permitting, procurement, construction, and closeout) and by structure. A detailed schedule sequence will be provided for each structure. All portions of the project will be interrelated by schedule logic so that a true "critical path" is easily identifiable. This schedule will be updated as the project progresses.

7.7. Design Scope – Please reference the attached Kimley-Horn Scope Document

TASK 8 WWTP #2 DECOMMISSIONING, WASTEWATER TRANSFER PUMP STATION, AND RECLAIMED PUMP STATION MASTER PLAN

This task generally includes incorporating the results of Tasks 4 through 7 to ensure continuity amongst the recommended alternatives. It will include a comprehensive cost and schedule evaluation as well as valuable system constraints to be used in the final CIP TM.

8.1. Facility Master Plan Deliverable Review – Wharton-Smith staff will review all deliverables prepared by the design team. Where applicable Wharton-Smith will provide the design team with the necessary information to complete their deliverables, including constructability reviews, value engineering, identification of conflicts, general questions, and sequencing feedback.

8.2. Facility Master Plan Conceptual Estimate – Wharton-Smith preconstruction staff will prepare a conceptual cost estimate based off the Schematic Design Report documents.

8.3. Workshops – Wharton-Smith will attend Tasks specific workshops for the deliverables, cost estimating, and decision making.

8.4. Conceptual Schedule Development and Phasing – At the conceptual design phase, Wharton-Smith will develop a baseline Critical Path Method (CPM) schedule using Primavera P6 software based on available information (and providing reasonable allowances for Owner review time and time for permits and approvals from governmental agencies). The schedule will be broken down by phase (design/permitting, procurement, construction, and closeout) and by structure. A detailed schedule sequence will be provided for each structure. All portions of the project will be interrelated by schedule logic so that a true "critical path" is easily identifiable. This schedule will be updated as the project progresses.

8.5. Design Scope – Please reference the attached Kimley-Horn Scope Document

TASK 9 WWTP #3 FACILITY PLAN

This task generally is to assess the current condition of WWTP #3 both in physical condition and operation capabilities. This will include site surveying and SUE. The information gathered will serve as the basis for an alternatives evaluation and will culminate an overall facility plan that considers current and future demand, project schedule and cost, and City input. The result of this will be incorporated into the overall CIP.

9.1. Condition Assessment Deliverable Reviews – Wharton-Smith staff will review all deliverables prepared by the design team. Where applicable Wharton-Smith will provide the design team with the necessary information to complete their deliverables, including constructability reviews, value engineering, identification of conflicts, general questions, and sequencing feedback.

9.2. Alternative Analysis Costing – Wharton-Smith preconstruction staff will perform cost evaluations on design alternatives. Where applicable detailed takeoffs (based on drawing concepts) on all construction trades such as site work, concrete, process equipment, utilities, mechanical, building, finishes, etc. will be completed. A cost estimate will be provided showing all material, labor, and equipment takeoffs and any subcontractor cost estimates used to generate the alternative costs will be provided.

9.3. Workshops – Wharton-Smith will attend Tasks specific workshops for the WWTP #3 Facility Plan deliverables, cost estimating, and decision making.

9.4. Facility Plan Conceptual Estimate – Wharton-Smith preconstruction staff will prepare a conceptual cost estimate based off the Schematic Design Report documents.

9.5. Alternatives & Facility Plan Schedule Development and Phasing – At the conceptual design phase, Wharton-Smith will develop a baseline Critical Path Method (CPM) schedule using Primavera P6 software based on available information (and providing reasonable allowances for Owner review time and time for permits and approvals from governmental agencies). The schedule will be broken down by phase (design/permitting, procurement, construction, and closeout) and by structure. A detailed schedule sequence will be provided for each structure. All portions of the project will be interrelated by schedule logic so that a true "critical path" is easily identifiable. This schedule will be updated as the project progresses.

9.6. Site Visits – Wharton-Smith will accompany the design team to site visits to provide constructability feedback for the facility plan options.

9.7. Conceptual MOPO'S – Wharton-Smith staff will work with the City and Kimley-Horn to understand the existing plant operational constraints so that MOPO's can be evaluated when considering design alternatives. These will allow alternative and conceptual estimates to include the pricing associated with maintaining plant operations.

9.8. Design Scope – Please reference the attached Kimley-Horn Scope Document

TASK 10 CIP DEVELOPMENT / PROGRAM PHASING

This task is generally to bring all aspects of tasks 2-9 into a single cohesive plan for the City. It will focus on ensuring that all inter-related components have been vetted and coordinated.

10.1. Workshops – Wharton-Smith will attend Tasks specific workshops for the CIP and program phasing deliverables, cost estimating, and decision making.

10.2. Conceptual Schedule Development and Phasing – Wharton-Smith will develop an overall CIP phasing schedule that incorporates all elements of the design phase as well as the schedules from the conceptual facility designs. This schedule will allow the city to understand the schedule impacts of alternatives and the long-term phasing of the project(s) in relation to CIP funding.

10.3. CIP Costing Deliverable Budget & Costing Updates – Wharton-Smith preconstruction staff will update earlier estimates to correspond to the latest updates and changes to the project as all aspect of the project are brought together to formulate the overall CIP. The estimates will be re-formatted to correspond to different CIP options or as needed for potential funding sources.

10.4. Comprehensive Plan Deliverables Reviews – Wharton-Smith staff will review and provide input for the CIP deliverable packages.

10.5. Design Scope – Please reference the attached Kimley-Horn Scope Document

TASK 11 ACCELERATED DESIGN PACKAGE

This task is generally for the design and GMP of critical components at WWTP #3 that are in need of repair or replacement. This package will consist of the design for replacement of the WWTP #3 existing course screens and associated minor rehabilitation of the existing pre-treatment structure; as well as WWTP #3 tertiary filtration replacement as recommended and accepted by the City during the mechanical process alternatives task. The primary objective of this phase of work is to develop detailed design documents including plans, specifications, and other associated information to support development of a guaranteed maximum price (GMP-1) to be negotiated with the City.

The Design-Builder shall do all Work necessary to complete the Design Phase for this task, achieve Substantial Completion of A/E Work for this task, and prepare the City to advance to the Construction Phase for the critical components identified above.

11.1. 30% Submittal Constructability Review & Value Engineering (VE) – Wharton-Smith will perform detailed design and constructability review to identify changes, conflicts, constructability concerns, spatial concerns, general questions, and overall consistency of the design disciplines (structural, civil, process, etc.). Value engineering options are also provided during this phase and throughout the life cycle of the project.

11.2. 30% Schedule Development and Phasing – At the 30% design phase, Wharton-Smith will develop a baseline Critical Path Method (CPM) schedule using Primavera P6 software based on available information (and providing reasonable allowances for Owner review time and time for permits and approvals from governmental agencies). The schedule will be broken down by phase (design/permitting, procurement, construction, and closeout) as by structure. A detailed schedule sequence will be provided for each structure. All portions of the project will be interrelated by schedule logic so that a true “critical path” is easily identifiable. This schedule will be managed and updated as the project progresses.

11.3. 30% Cost Estimate – Wharton-Smith preconstruction staff will perform detailed takeoffs on all construction trades such as site work, concrete, process equipment, utilities, mechanical, building, finishes, etc. A full cost estimate book will be provided showing all material, labor, and equipment takeoffs along with subcontractor cost estimates.

11.4. 60% Submittal / Conformed Documents Review – These costs are for the same items outlined in Task 9.1 but include final review of all documents to ensure that they are ready for GMP bidding.

11.5. 60% Schedule Development and Phasing – At the 60% design phase, Wharton-Smith will update the previous schedule and incorporate all design progression changes. Input from subcontractors and suppliers will be utilized and feedback from any early GMP’s will be incorporated.

11.6. 60% Cost Estimate – Wharton-Smith preconstruction staff will perform detailed takeoffs on all construction trades such as site work, concrete, process equipment, utilities, mechanical, building, finishes, etc. A full cost estimate book will be provided showing all material, labor, and equipment takeoffs along with subcontractor cost estimates.

11.7. Long Lead Equipment / Early Work Packages – Wharton-Smith will identify and break-out long lead equipment and early work packages for these scopes to be procured and executed as early as practical so that the overall construction schedule is minimized. Requirements for short-term and long-term storage will be evaluated and implemented as necessary. Wharton-Smith preconstruction staff will also review proposals from the membrane system suppliers along with proposals received from other selected major equipment suppliers for incorporation into final design.

11.8. 90% Submittal / Conformed Document Reviews – These costs are for the same items outlined in Task 9.1 but include final review of all documents to ensure that they are ready for GMP bidding.

11.9. GMP Schedule – The schedule developed previously is modified based on the GMP design documents and final construction sequencing is determined. This schedule shall serve as the basis for General Condition's costs in the GMP as well as the contract time required for the duration of construction.

11.10. GMP Development – Wharton-Smith will identify and assemble appropriate work packages from GMP design documents to solicit prospective subcontractor and supplier proposals for providing all elements of Work not included in the General Conditions. Work packages will be assembled with appropriate scopes of work should the Owner have any goals for involvement of the local and/or small contracting community. A selected bidders list will be developed and evaluated with the City prior to the bidding phase. Wharton-Smith preconstruction staff will perform detailed takeoffs (based on the GMP design documents) for all self-perform work. A full cost estimate book will be provided showing all material, labor, and equipment takeoffs and any subcontractor/supplier cost proposals. This estimate will be submitted as the GMP Proposal for the work.

11.11. Pre-Bid Site Visits – Wharton-Smith will host, coordinate, and manage a pre-bid site visit for all potential bidders for the subcontract and purchase order work packages. Wharton-Smith will take notes and answer questions. Bid questions are required to be formally submitted to Wharton-Smith in writing for coordination with Winter Haven and the Engineer to provide responses. Clarifications/addenda will be issued to bidding parties as needed based on the formal bid questions that are received.

11.12. Receive Bids – Wharton-Smith staff will receive bids throughout the course of an entire day. The bid times may be staggered to ensure our ability to answer questions or provide direction up to the last minute.

11.13. Review Bids and Recommend Award – All of the subcontractor and purchase order work package bids are reviewed for completeness, responsiveness, exceptions, clarifications, and deviations from the contract documents. Value engineering ideas and schedule commitments will also be evaluated. Wharton-Smith will provide a bid tabulation worksheet and methodology for the selection of each subcontractor it chooses to engage.

11.14. Final GMP Assembly – All documents that comprise the GMP are assembled into a single tabbed and searchable binder/pdf document. This includes all schedules, bid documents, subcontractor and supplier bids, Wharton-Smith self-perform cost estimates, other backup quotes, general conditions breakdowns, value engineering logs, risk register, contingencies and allowances, and other GMP relevant documents that were considered in creation of the GMP.

11.15. Design Scope – Please reference the attached Kimley-Horn Scope Document

TASK 12 FACILITY OPERATION AND MAINTENANCE

This task is an allowance for work associated with existing facility operation and maintenance. This task consists of unified design phase and construction phase Work, based on observed field operating status, and the need to retain certain pieces of existing infrastructure in good working order for incorporation into final Project Work delivery. This may include aeration basin and influent value related maintenance. Compensation for this allowance will be on a time and material or lump sum proposal basis.

Fee Summary:

TASK	DESCRIPTION	COST
TASK 1	PROJECT MANAGEMENT / DATA COLLECTION	$ 2,728,876
TASK 2	POLLARD ROAD WRF PLAN	$ 614,305
TASK 3	WATER CAMPUS VISIONING	$ 585,527
TASK 4	12" FM ASSESSMENT	$ 227,651
TASK 5	WWTP #2 to WWTP #3 FORCE MAIN ALTERNATIVES	$ 1,059,572
TASK 6	WWTP #2 DECOMISSIONING AND WASTERWATER TRANSFER PUMP STATION MASTER PLAN	$ 282,970
TASK 7	WWTP #2 RECLAIMED WATER TRANSMISSION SYSTEM ALTERNATIVES EVALUTION	$ 194,206
TASK 8	WWTP #2 DECOMISSIONING, WASTERWATER TRANSFER PUMP STATION, AND RECLAIMED WATER PUMP STATION MASTER PLAN	$ 62,481
TASK 9	WWTP #3 FACILITY PLAN	$ 1,646,855
TASK 10	CIP DEVELOPMENT / PROGRAM PHASING	$ 293,975
TASK 11	ACCELERATED DESIGN PACKAGE	$ 2,237,759
TASK 12	ALLOWANCE - FACILITY OPERATION AND MAINTENANCE	$ 2,000,000
	Total	$ 11,934,177

Fee Breakdown: Please see attached Fee Breakdown sheets with design team backup documentation.

Wharton-Smith Inc.,
4912 W. La Salle Street
Tampa, FL 33607

By: _____
Todd O'Donnell
Vice President of Business Development - Water

City of Winter Haven
451 Third Street
Winter Haven, FL 33881

By: _____
T. Michael Stavres
City Manager

Item	TASK	QTY	UNIT	Principal-In-Charge		Design Build Manager		General Superintendent		Preconstruction Manager		Director of Estimating		Senior Project Manager		Speciality Estimator		Administrative Assistant		Safety Manager		Risk Coordinator		Document Specialist		Project Accountant		WHARTON-SMITH PERSONNEL			SUBCONTRACTOR		$ TOTALS
				77		649		454		2280		706		730		1704		531		99		116		459		96							
					$13,552		$108,383		$76,726		$344,280		$124,256.00		$118,260		$257,304		$48,852		$13,464		$15,196		$37,179		$11,520						
					$176.00		$167.00		$169.00	Rate	$151.00	Rate	$176.00	Rate	$162.00	Rate	$151.00	Rate	$92.00	Rate	$136.00	Rate	$131.00	Rate	$81.00	Rate	$120.00	HR's	LABOR COSTS	MISC. COSTS (PRO-RATED)	SUBTOTAL			
				HR	$	HR	$	HR	$	HR	$	HR	$	HR	$	HR	$	HR	$	HR	$	HR	$	HR	$	HR	$					SUB	COST	
TASK 1	**PROJECT MANAGEMENT / DATA COLLECTION**																																
1.1	PROJECT KICKOFF MEETING / TEAM CHARTERING WORKSHOP	1	EA	2	352	8	1336		0	8	1208		0		0		0	2	184		0		0		0		0	20	3,080	77	3,157		-	3,157
1.2	DESIGN ELEMENT MEETINGS	12	EA		0	24	4008		0	48	7248		0	12	1944		0	24	2208		0		0		0		0	108	15,408	417	15,825		-	15,825
1.3	BI-WEEKLY PROGRESS MEETINGS	36	EA	18	3168	72	12024		0	72	10872	24	4224	36	5832		0	36	3312		0		0	36	2916		0	294	42,348	1,135	43,483		-	43,483
1.4	WEEKLY INTERNAL ENGINEERING MEETINGS	78	EA		0	78	13026		0	78	11778		0	78	12636		0	39	3588		0		0	39	3159		0	312	44,187	1,204	45,391		-	45,391
1.5	DOCUMENT MANAGEMENT	1	LS		0	24	4008		0	96	14496		0		0		0	40	3680		0		0	104	8424		0	264	30,608	1,019	31,627		-	31,627
1.6	PROJECT MANAGEMENT & ADMINISTRATION	1	EA		0	52	8684		0	480	72480		0	40	6480		0	72	6624		0	80	10480	96	7776	96	11520	916	124,044	3,536	127,580		-	127,580
1.7	SITE VISITS & INVESTIGATION	9	EA		0	36	6012	50	8450	72	10872	32	5632		0		0	4	368	8	1088	8	1048		0		0	210	33,470	811	34,281		-	34,281
1.8	EQUIPMENT VENDOR MEETINGS	1	EA	8	1408	8	1336		0		0	8	1408		0		0	4	368		0		0		0		0	28	4,520	108	4,628		-	4,628
1.9	PRECONSTRUCTION SCHEDULE DEVELOPMENT AND UPDATES	1	LS	1	176	8	1336		0	160	24160	4	704	32	5184		0	4	368		0		0		0		0	209	31,928	807	32,735		-	32,735
1.10	FUNDING ASSISTANCE	1	LS	1	176	40	6680	4	676	120	18120	20	3520		0	120	18120	16	1472	2	272		0	8	648		0	331	49,684	1,278	50,962		-	50,962
1.11	DESIGN SCOPE	1	LS																									0	-	-	-	*KHA*	*2,090,000*	2,090,000
	SUBTOTALS			**30**	**5,280**	**350**	**58,450**	**54**	**9,126**	**1,134**	**171,234**	**88**	**15,488**	**198**	**32,076**	**120**	**18,120**	**241**	**22,172**	**10**	**1,360**	**88**	**11,528**	**283**	**22,923**	**96**	**11,520**	**2,692**	**379,277**	**10,392**	**389,669**		**2,090,000**	**2,479,669**
TASK 2	**POLLARD ROAD WRF PLAN**																																
2.1	DELIVERABLE REVIEWS	2	EA	2	352	4	668	4	676	16	2416		0	8	1296		0	2	184	2	272		0	2	162		0	40	6,026	154	6,180		-	6,180
2.2	ALTERNATIVE ANALYSIS COSTING	4	EA	2	352	2	334	4	676	16	2416	24	4224	8	1296	64	9664	4	368	1	136		0	4	324		0	129	19,790	498	20,288		-	20,288
2.3	FACILITY PLAN CONCEPUTAL ESTIMATE	1	EA	1	176	2	334	4	676	16	2416	40	7040		0	160	24160	16	1472	2	272		0	8	648		0	249	37,194	961	38,155		-	38,155
2.4	CONCEPTUAL SCHEDULE DEVELOPMENT AND PHASING	1	EA		0	1	167	2	338	8	1208		0	8	1296		0		0		0		0		0		0	19	3,009	73	3,082		-	3,082
2.5	WORKSHOPS	3	EA		0	6	1002		0	12	1812	6	1056	6	972		0	3	276		0		0	3	243		0	36	5,361	139	5,500		-	5,500
2.6	DESIGN SCOPE	1	LS		0		0		0		0		0		0		0		0		0		0		0		0	0	-	-	-	KHA	*485,000*	485,000
	SUBTOTALS			**5**	**880**	**15**	**2,505**	**14**	**2,366**	**68**	**10,268**	**70**	**12,320**	**30**	**4,860**	**224**	**33,824**	**25**	**2,300**	**5**	**680**	**-**	**-**	**17**	**1,377**	**-**	**-**	**473**	**71,380**	**1,825**	**73,205**	**-**	**485,000**	**558,205**
TASK 3	**WATER CAMPUS VISIONING**																																
3.1	DELIVERABLE REVIEWS	2	EA	2	352	4	668	4	676	16	2416		0	8	1296		0	2	184	2	272		0	2	162		0	40	6,026	154	6,180		-	6,180
3.2	ALTERNATIVE ANALYSIS COSTING	3	EA	2	352	12	2004	3	507	48	7248	18	3168	6	972	64	9664	3	276	1	136		0	3	243		0	160	24,570	618	25,188		-	25,188
3.3	FACILITY PLAN CONCEPUTAL ESTIMATE	1	EA	1	176	4	668	4	676	16	2416	64	11264		0	120	18120	16	1472	2	272		0	8	648		0	235	35,712	907	36,619		-	36,619
3.5	WORKSHOPS	2	EA		0	6	1002		0	36	5436	8	1408	6	972		0	3	276		0		0	3	243		0	62	9,337	239	9,576		-	9,576
3.4	CONCEPTUAL SCHEDULE DEVELOPMENT AND PHASING	1	EA		0	2	334	2	338	16	2416		0	8	1296		0		0		0		0		0		0	28	4,384	108	4,492		-	4,492
3.6	DESIGN SCOPE	1	LS		0		0		0		0		0		0		0		0		0		0		0		0	0	-	-	-	KHA	*450,000*	450,000
	SUBTOTALS			**5**	**880**	**28**	**4,676**	**13**	**2,197**	**132**	**19,932**	**90**	**15,840**	**28**	**4,536**	**184**	**27,784**	**24**	**2,208**	**5**	**680**	**-**	**-**	**16**	**1,296**	**-**	**-**	**525**	**80,029**	**2,026**	**82,055**	**-**	**450,000**	**532,055**
TASK 4	**12" FM ASSESSMENT**																																
4.1	CONDITION ASSESMENT SITE VISITS	4	EA		0	12	2004	12	2028	12	1812		0		0		0		0	2	272	2	262		0		0	40	6,378	154	6,532		-	6,532
4.2	CONDITION ASSESMENT DELIVERABLE REVIEWS	1	EA		0	2	334	2	338	6	906		0	4	648		0		0	2	272	2	262		0		0	18	2,760	69	2,829		-	2,829
4.3	DESIGN SCOPE	1	LS		0		0		0		0		0		0		0		0		0		0		0		0	0	-	-	-	KHA	*197,500*	197,500
	SUBTOTALS			**-**	**-**	**14**	**2,338**	**14**	**2,366**	**18**	**2,718**	**-**	**-**	**4**	**648**	**-**	**-**	**-**	**-**	**4**	**544**	**4**	**524**	**-**	**-**	**-**	**-**	**58**	**9,138**	**223**	**9,361**	**-**	**197,500**	**206,861**
TASK 5	**WWTP #2 to WWTP #3 FORCE MAIN ALTERNATIVES**																																
5.1	FORCE MAIN ALTERNATIVE ANALYSIS COST ELEMENTS	1	LS	2	352	6	1002	8	1352	16	2416	36	6336	6	972	64	9664	8	736	1	136		0	3	243		0	150	23,209	579	23,788		-	23,788
5.3	FORCE MAIN ALTERNATIVES DELIVERABLE REVIEWS	1	EA	1	176	4	668	24	4056	24	3624		0	8	1296		0	4	368	8	1088		0	2	162		0	75	11,438	290	11,728		-	11,728
5.4	FORCE MAIN ROUTE RECOMMENDATIONS DELIVERABLE REVIEWS	1	EA		0	16	2672	16	2704	48	7248		0	16	2592		0		0		0		0	1	81		0	97	15,297	374	15,671		-	15,671
5.5	FORCE MAIN ROUTE CONCEPTUAL COST ANALYSIS	2	EA	1	176	4	668	24	4056	48	7248	72	12672		0	160	24160	24	2208	2	272		0	8	648		0	343	52,108	1,324	53,432		-	53,432
5.6	SITE VISITS	3	EA		0	24	4008	64	10816	16	2416		0		0		0		0	2	272	2	262		0		0	108	17,774	417	18,191		-	18,191
5.7	DESIGN SCOPE	1	LS		0		0		0		0		0		0		0		0		0		0		0		0	0	-	-	-	KHA	*840,000*	840,000
	SUBTOTALS			**4**	**704**	**54**	**9,018**	**136**	**22,984**	**152**	**22,952**	**108**	**19,008**	**30**	**4,860**	**224**	**33,824**	**36**	**3,312**	**13**	**1,768**	**2**	**262**	**14**	**1,134**	**-**	**-**	**773**	**119,826**	**2,984**	**122,810**	**-**	**840,000**	**962,810**
TASK 6	**WWTP #2 DECOMISSIONING AND WASTERWATER TRANSFER PUMP STATION MASTER PLAN**																																
6.1	CONDITION ASSESMENT DELIVERABLE REVIEWS	2	EA	2	352	4	668	4	676	16	2416		0	8	1296		0	2	184	2	272		0	2	162		0	40	6,026	154	6,180		-	6,180
6.2	RECOMMENDATIONS COST ANALYSIS	1	EA	2	352	2	334	4	676	16	2416	40	7040		0	120	18120	16	1472	2	272		0	8	648		0	210	31,330	811	32,141		-	32,141
6.3	RECOMMENDATIONS DELIVERABLE REVIEW	1	EA		0	8	1336	4	676	12	1812		0	8	1296		0		0		0		0	1	81		0	33	5,201	127	5,328		-	5,328
6.4	WORKSHOPS	2	EA		0	6	1002		0	12	1812	6	1056	6	972		0	3	276		0		0	3	243		0	36	5,361	139	5,500		-	5,500
6.5	CONCEPTUAL SCHEDULE DEVELOPMENT AND PHASING	1	EA		0	1	167	2	338	8	1208		0	8	1296		0		0		0		0		0		0	19	3,009	73	3,082		-	3,082
6.6	SITE VISITS	3	EA		0	12	2004	12	2028	12	1812		0		0		0		0	2	272	2	262		0		0	40	6,378	154	6,532		-	6,532
6.7	CONCEPTUAL MOPOs	1	LS		0	8	1336	24	4056	24	3624		0	16	2592		0	4	368	12	1632	8	1048	4	324		0	100	14,980	386	15,366		-	15,366
6.8	DESIGN SCOPE	1	LS		0		0		0		0		0		0		0		0		0		0		0		0	0	-	-	-	KHA	*183,000*	183,000
	SUBTOTALS			**4**	**704**	**41**	**6,847**	**50**	**8,450**	**100**	**15,100**	**46**	**8,096**	**46**	**7,452**	**120**	**18,120**	**25**	**2,300**	**18**	**2,448**	**10**	**1,310**	**18**	**1,458**	**-**	**-**	**478**	**72,285**	**1,844**	**74,129**	**-**	**183,000**	**257,129**
TASK 7	**WWTP #2 RECLAIMED WATER TRANSMISSION SYSTEM ALTERNATIVES EVALUTION**																																
7.1	TRANSMISSION SYSTEM DELIVERABLE REVIEW	1	EA	2	352	4	668	4	676	16	2416		0	8	1296		0	2	184	2	272		0	2	162		0	40	6,026	154	6,180		-	6,180
7.2	ALTERNATIVE ANALYSIS COSTING	3	EA	2	352	3	501	3	507	12	1812	18	3168	6	972	64	9664	3	276	1	136		0	3	243		0	115	17,631	444	18,075		-	18,075.00
7.3	RECLAIMED WATER MPS DELIVERABLE REVIEW	1	EA	2	352	4	668	4	676	16	2416		0	8	1296		0	2	184	2	272		0	2	162		0	40	6,026	154	6,180		-	6,180
7.4	RECLAIMED WATER MPS ESTIMATE	1	EA	1	176	2	334	4	676	16	2416	40	7040		0	120	18120	16	1472	2	272		0	8	648		0	209	31,154	807	31,961		-	31,961.00
7.5	WORKSHOPS	3	EA		0	8	1336		0	12	1812	6	1056	8	1296		0	2	184		0		0	2	162		0	38	5,846	147	5,993		-	5,993.00
7.6	CONCEPTUAL SCHEDULE DEVELOPMENT AND PHASING	1	EA		0	1	167	2	338	8	1208		0	8	1296		0		0		0		0		0		0	19	3,009	73	3,082		-	3,082.00
7.7	DESIGN SCOPE	1	LS		0		0		0		0		0		0		0		0		0		0		0		0	0	-	-	-	KHA	*105,000*	105,000.00
	SUBTOTALS			**7**	**1,232**	**22**	**3,674**	**17**	**2,873**	**80**	**12,080**	**64**	**11,264**	**38**	**6,156**	**184**	**27,784**	**25**	**2,300**	**7**	**952**	**-**	**-**	**17**	**1,377**	**-**	**-**	**461**	**69,692**	**1,779**	**71,471**	**-**	**105,000**	**176,471**
TASK 8	**WWTP #2 DECOMISSIONING, WASTERWATER TRANSFER PUMP STATION, AND RECLAIMED WATER PUMP STATION MASTER PLAN**																																
8.1	MASTER PLAN DELIVERABLE REVIEW	1	EA		0	4	668	4	676	12	1812		0	8	1296		0		0		0		0	1	81		0	29	4,533	112	4,645		-	4,645
8.2	FACILITY MASTER PLAN CONCEPTUAL ESTIMATE	1	EA	1	176	2	334	4	676	12	1812	20	3520		0	64	9664	16	1472	2	272		0	8	648		0	129	18,574	498	19,072		-	19,072
8.3	WORKSHOP	1	EA		0	4	668		0	4	604	2	352	2	324		0	2	184		0		0	2	162		0	16	2,294	62	2,356		-	2,356
8.4	CONCEPTUAL SCHEDULE DEVELOPMENT AND PHASING	1	EA		0	1	167	2	338	12	1812		0	8	1296		0		0		0		0		0		0	23	3,613	89	3,702		-	3,702
8.5	DESIGN SCOPE	1	LS		0		0		0		0		0		0		0		0		0		0		0		0	0	-	-	-	KHA	*27,000*	27,000
	SUBTOTALS			**1**	**176**	**11**	**1,837**	**10**	**1,690**	**40**	**6,040**	**22**	**3,872**	**18**	**2,916**	**64**	**9,664**	**18**	**1,656**	**2**	**272**	**-**	**-**	**11**	**891**	**-**	**-**	**197**	**29,014**	**761**	**29,775**	**-**	**27,000**	**56,775**
TASK 9	**WWTP #3 FACILITY PLAN**																																
9.1	CONDITION ASSESMENT DELIVERABLE REVIEWS	2	EA	2	352	4	668	4	676	16	2416		0	8	1296		0	2	184	2	272		0	2	162		0	40	6,026	154	6,180		-	6,180
9.2	ALTERNATIVE ANALYSIS COSTING FOR FACILITY PLAN	1	EA	1	176	8	1336	4	676	48	7248	40	7040	34	5508	160	24160	16	1472	2	272		0	8	648		0	321	48,536	1,239	49,775		-	49,775
9.3	WORKSHOPS	1	EA		0	4	668		0	8	1208	8	1408	12	1944		0	2	184		0		0	2	162		0	36	5,574	139	5,713		-	5,713
9.4	FACILITY PLAN DELIVERABLE REVIEW	1	EA		0	4	668	4	676	24	3624	12	2112	12	1944		0	2	184	1	136		0	1	81		0	60	9,425	232	9,657		-	9,657
9.5	ALTERNATIVES & FACILITY PLAN SCHEDULE DEVELOPMENT AND PHASIN	1	EA		0	1	167	2	338	12	1812		0	12	1944		0		0		0		0		0		0	27	4,261	104	4,365		-	4,365
9.6	SITE VISITS	3	EA		0	12	2004	48	8112	24	3624		0		0		0		0	2	272	2	262		0		0	88	14,274	340	14,614		-	14,614
9.7	CONCEPTUAL MOPOs	1	LS		0	8	1336	36	6084	48	7248		0	16	2592		0	4	368	12	1632	8	1048	4	324		0	136	20,632	525	21,157		-	21,157
9.8	DESIGN SCOPE	1	LS		0		0		0		0		0		0		0		0		0		0		0		0	0	-	-	-	KHA	*1,385,000*	1,385,000
	SUBTOTALS			**3**	**528**	**41**	**6,847**	**98**	**16,562**	**180**	**27,180**	**60**	**10,560**	**94**	**15,228**	**160**	**24,160**	**26**	**2,392**	**19**	**2,584**	**10**	**1,310**	**17**	**1,377**	**-**	**-**	**708**	**108,728**	**2,733**	**111,461**	**-**	**1,385,000**	**1,496,461**

Item	TASK	QTY	UNIT	Principal-In-Charge		Design Build Manager		General Superintendent		Preconstruction Manager		Director of Estimating		Senior Project Manager		Speciality Estimator		Administrative Assistant		Safety Manager		Risk Coordinator		Document Specialist		Project Accountant		WHARTON-SMITH PERSONNEL		SUBCONTRACTOR		$ TOTALS
				77		649		454		2280		706		730		1704		531		99		116		459		96						
					$13,552		$108,383		$76,726		$344,280		$124,256.00		$118,260		$257,304		$48,852		$13,464		$15,196		$37,179		$11,520					
					$176.00		$167.00		$169.00	Rate	$151.00	Rate	$176.00	Rate	$162.00	Rate	$151.00	Rate	$92.00	Rate	$136.00	Rate	$131.00	Rate	$81.00	Rate	$120.00	HR's	LABOR COSTS	MISC. COSTS (PRO-RATED)	SUBTOTAL		
				HR	$	HR	$	HR	$	HR	$	HR	$	HR	$	HR	$	HR	$	HR	$	HR	$	HR	$	HR	$					SUB	COST
TASK 10	**CIP DEVELOPMENT / PROGRAM PHASING**																																
10.1	WORKSHOPS	1	EA		0	4	668		0	8	1208	4	704	8	1296		0	2	184		0		0	2	162		0	28	4,222	108	4,330		-	4,330
10.2	OVERALL CIP SCHEDULE DEVELOPMENT AND PHASING	1	EA		0	1	167	2	338	40	6040		0	16	2592		0		0		0		0		0		0	59	9,137	228	9,365		-	9,365
10.3	CIP COSTING DELIVERABLE BUDGET & COSTING UPDATES	1	EA	1	176	8	1336	4	676	60	9060	40	7040	24	3888	64	9664	8	736	2	272		0	8	648		0	219	33,496	845	34,341		-	34,341
10.4	COMPREHENSIVE PLAN DELIVERABLES REVIEW	1	EA	1	176	4	668	4	676	8	1208	2	352	4	648		0	2	184		0		0	1	81		0	26	3,993	100	4,093		-	4,093
10.5	DESIGN SCOPE	1	LS		0		0		0		0		0		0		0		0		0		0		0		0	0	-	-	-	KHA	*215,000*	215,000
	SUBTOTALS			**2**	**352**	**17**	**2,839**	**10**	**1,690**	**116**	**17,516**	**46**	**8,096**	**52**	**8,424**	**64**	**9,664**	**12**	**1,104**	**2**	**272**	**-**	**-**	**11**	**891**	**-**	**-**	**332**	**50,848**	**1,281**	**52,129**	**-**	**215,000**	**267,129**
TASK 11	**ACCELERATED DESIGN PACKAGE**																																
11.1	30% SUBMITTAL CONSTRUCTABILITY REVIEW AND VE	1	EA	2	352	4	668	4	676	16	2416		0	8	1296		0	2	184	2	272		0	2	162		0	40	6,026	154	6,180		-	6,180
11.2	30% SCHEDULE DEVELOPMENT AND PHASING	1	EA		0	1	167	2	338	12	1812		0	8	1296		0		0		0		0		0		0	23	3,613	89	3,702		-	3,702
11.3	30% COST ESTIMATE	1	EA	1	176	2	334	4	676	16	2416	40	7040		0	120	18120	16	1472	2	272		0	8	648		0	209	31,154	807	31,961		-	31,961
11.4	60% SUBMITTAL / CONFORMED DOCUMENTS REVIEW	1	EA	2	352	4	668	4	676	16	2416		0	8	1296		0	2	184	2	272		0	2	162		0	40	6,026	154	6,180		-	6,180
11.5	60% SCHEDULE DEVELOPMENT AND PHASING	1	EA		0	1	167	2	338	8	1208		0	8	1296		0		0	1	0		0		0		0	19	3,009	73	3,082		-	3,082
11.6	60% COST ESTIMATE	1	EA	1	176	2	334	4	676	16	2416	40	7040		0	120	18120	16	1472	2	272		0	8	648		0	209	31,154	807	31,961		-	31,961
11.7	LONG LEAD EQUIPMENT / EARLY WORK PACKAGES	1	EA	2	352	8	1336	4	676	20	3020		0	20	3240		0	10	920		0		0	10	810		0	74	10,354	286	10,640			10,640
11.8	90% SUBMITTAL / CONFORMED DOCUMENT REVIEWS	1	EA	2	352	4	668	4	676	16	2416		0	8	1296		0	2	184	2	272		0	2	162		0	40	6,026	154	6,180		-	6,180
11.9	GMP SCHEDULE	1	EA		0	1	167	2	338	8	1208		0	8	1296		0		0		0		0		0		0	19	3,009	73	3,082		-	3,082
11.10	GMP DEVELOPMENT	1	EA	2	352	2	334	4	676	60	9060	20	3520	60	9720	120	18120	16	1472	2	272		0	8	648		0	294	44,174	1,135	45,309		-	45,309
11.11	PRE-BID SITE VISITS	2	EA		0	6	1002		0	16	2416		0	8	1296		0	3	276		0		0	3	243		0	36	5,233	139	5,372		-	5,372
11.12	RECEIVE BIDS (SINGLE BID DAY)	1	EA		0	1	167		0	8	1208		0	8	1296		0	8	736		0		0		0		0	25	3,407	97	3,504		-	3,504
11.13	REVIEW BIDS AND RECOMMEND AWARD	3	EA	2	352	12	2004	4	676	32	4832	8	1408	32	5184		0	8	736	2	272	2	262	4	324		0	106	16,050	409	16,459		-	16,459
11.14	FINAL GMP ASSEMBLY	4	EA	2	352	8	1336		0	16	2416	4	704	16	2592		0	16	1472		0		0	8	648		0	70	9,520	270	9,790			9,790
11.15	DESIGN SCOPE	1	LS		0		0		0		0		0		0		0		0		0		0		0		0	0	-	-	-	KHA	1,850,000	1,850,000
	SUBTOTALS			**16**	**2,816**	**56**	**9,352**	**38**	**6,422**	**260**	**39,260**	**112**	**19,712**	**192**	**31,104**	**360**	**54,360**	**99**	**9,108**	**14**	**1,904**	**2**	**262**	**55**	**4,455**	**-**	**-**	**1,204**	**178,755**	**4,647**	**183,402**	**-**	**1,850,000**	**2,033,402**
TASK 12	**ALLOWANCES**																																
12.1	ALLOWANCE - FACILITY OPERATION AND MAINTENANCE	1	LS		0		0		0		0		0		0		0		0		0		0		0		0	0	-	-	-		1,817,356	1,817,356
	SUBTOTALS			**-**	**-**	**-**	**-**	**-**	**-**	**-**	**-**	**-**	**-**	**-**	**-**	**-**	**-**	**-**	**-**	**-**	**-**	**-**	**-**	**-**	**-**	**-**	**-**	**-**	**-**	**-**	**-**	**1,817,356**	**1,817,356**
	TOTAL PRECONSTRUCTION SERVICES			77		649		454		2280		706		730		1704		531		99		116		459		96		**7901**	**1,168,972**	**30,495**	**1,199,467**		**TOTAL**	**10,844,323**

MARKUP	**9.00%**	**812,427**
MARKUP ON ALLOWANCE	**9.00%**	**163,562**
INSURANCE	**1.05%**	**113,865**
Grand Total		**11,934,177**

TASK ORDER #1

Identification of Project:

Project: Winter Haven WRF Initial Conceptual Planning and Design Services

Project Managers: Lewis Bryant, P.E. and Cara Elliott, P.E.

Project Understanding

In response to the RFQ-24-18, the City of Winter Haven (City) selected the progressive design-build team led by Wharton-Smith (Design-Builder) to implement the Water Recycling Facility at Pollard Road Wastewater Treatment Plant #2 Abandonment Program (Program). The design-build team is led by Wharton-Smith as the Design-Builder and Kimley-Horn as the Lead Engineer.

Kimley-Horn will lead the planning and design supported by sub consultants All subconsultants will have a direct contract relationship with Kimley-Horn. Anticipated total duration of 18 months from NTP for this task.

Specific Scope of Services:

Task 1 – Project Management/Data Collection

A. Kimley-Horn and sub-consultants will prepare for and attend a project kick-off meeting with the City to discuss the project objectives, schedule, and work plan. Project objectives, schedule, milestones, communication methods, and base information will all be discussed.

B. Kimley-Horn's sub-consultant program advisors will attend project meetings and provide general consulting services on an "as-requested" basis to provide historical references and specialty services.

C. Kimley-Horn and sub-consultants will prepare for and conduct alternating (in-person/conference call) bi-weekly project update meetings with the City for up to 36 meetings at 2-hours per meeting average duration. Meeting agenda topics will include project schedule reviews, status updates, submittal reviews and look ahead reviews.

D. Kimley-Horn and sub-consultants will conduct weekly internal work plan reviews and progress meetings to ensure project schedule and budget are being met. Anticipate up to 78 meetings at 1 hour per meeting average duration.

E. Kimley-Horn will maintain records of meetings, permit submittals, design files, project construction documents, contracts, and all other project record information for future reference during the project and for a time period as required by law after project completion. Kimley-Horn will provide the City with electronic records of permit applications, project construction plans, client approvals, shop drawings, as-built record drawings, and specification submittals upon project completion.

F. Kimley-Horn will provide project management, project accounting, general coordination, deliverable production including ordinary expenses such as printing, mailing, travel, and other typical administrative expenses throughout the project.

G. Kimley-Horn will coordinate and attend up to 9 days of off-site visits to various wastewater treatment facilities to observe treatment equipment for potential use by the City.

H. Kimley-Horn will organize, schedule, and accompany City staff during equipment vendor meetings at 2025 WEFTEC in Chicago, IL. Kimley-Horn shall be responsible at it's sole cost and expense or all travel costs, subsistence costs, housing and hotel costs, conference registration costs, continuing educations costs, and all other associated costs and expenses associated with conference attendance by Kimley-Horn and Kimley-Horn personnel.

I. The City will provide Kimley-Horn and sub consultants the following information if existing and if available:

Physical Data: Existing as-built/design drawings (PDF and AutoCAD) and specifications, surveys, mechanical process equipment performance data, tank configurations, biosolids processing data, FDEP permit application reports, operation and maintenance (O&M) manuals, and any other data or information pertinent for the evaluation.

Process Data: Operating objectives such as MLSS, MLVSS, DO concentration set-points, recycle rates, SRT, biosolids processing, etc. The City will provide Kimley-Horn the last two years of daily operations and process control data in electronic format (Excel preferred).

Operating Data: Operating and maintenance costs including energy consumption and chemical costs.

Influent Wastewater Characteristics: Historical influent sampling data, industrial pretreatment sampling data, and the FDEP Discharge Monitoring Report (DMR) sampling results for the last 2 years in electronic format (Excel preferred). Kimley-Horn will perform preliminary evaluations and then submit a list of additional parameters and sampling schedule for the City to perform.

Recycle and Side Stream Characteristics: Kimley-Horn will perform preliminary evaluations and then submit a list of additional parameters and sampling schedule for the City to perform.

Prior to disclosure of any information that is exempt or confidential and exempt from disclosure under Florida law, Kimley-Horn shall file with the City appropriate information request forms and affidavits as may be required by the City's Custodian of Public Records for compliance with Chapter 119, Florida Statutes, and other applicable state and local laws.

J. Kimley-Horn will execute agreements with the following sub-consultants. Kimley-Horn will coordinate with and manage the sub-consultants, review and process pay requests, and consolidate individual deliverables into consolidated documents as needed for delivery to the City.

- Wright Pierce – Major Design Partner
- Bailey Engineering Consultants – Electrical and I&C Engineer
- V&A Consulting Engineers – Condition Assessment/Odor Control/Program Advisor
- A2O Consulting – Cybersecruity/Program Advisor
- Straughn Trout Architects – Architect
- KMAC Consulting – Hydraulic Modeling
- ASRus – Hydrogeological
- Anfield Consulting – Program Advisor/Financial
- Talent Boost – Program Advisor/Financial

K. Kimley-Horn will contract directly with A2O to provide program advisor services or specialty consulting services related to cyber security for the duration of this task (18 months).

L. Kimley-Horn will contract directly with V&A to provide program advisor services or specialty consulting services related to corrosion control, condition assessments, and odor control for the duration of this task (18 months).

M. Kimley-Horn will contract directly with Anfield Consulting to provide strategic grant/funding solution consulting, regulatory support, and planning support for the duration of this task (18 months).
   - Anfield Consulting will serve as a representative and spokesperson for the City and/or Project Team with state, regional, and/or local governmental entities, members of the Florida Legislature, legislative branch staff, other stakeholders. Anfield Consulting will represent the City and/or Project Team before the Executive Branch and the Florida Legislature during Regular/Special Sessions related to the project.
   - Anfield Consulting will track proposed environmental and growth management bills; and coordinate with legislators to sponsor and Advocate the position and goal(s) of the City related to the project.
   - Anfield will provide other similar consulting activities to help plan for and secure funding for the project as requested by the City and/or Project Team.

N. Kimley-Horn will contract directly with Talentboost to provide consulting services related to operability reviews and operations input on planning and design for the duration of this task (18 months).

   Kimley-Horn will provide funding strategy development, funding application support, and support to the City's funding consultants for the duration of this task (18 months).

Task 2 – Pollard Road Water Recycling Facility Plan

The Pollard Road Water Recycling Facility (WRF) will be a new greenfield facility constructed next to the existing WWTP #3 facility. The primary goal is phased construction of an initial 12.0 MGD annual average daily flow (AADF) capacity facility that will be planned for future phased expansion to 24.0 MGD. The Pollard Road WRF will be designed to meet advanced water treatment (AWT) effluent criteria of 5 mg/l biological oxygen demand (BOD), 5 mg/l total suspended solids (TSS), 3 mg/l total nitrogen (TN), and 1 mg/l total phosphorous (TP). Treated effluent from the WRF will be conveyed throughout the City's "Sapphire Necklace" and used as a reclaimed water source for irrigation, wetland recharge, and other beneficial public access reclaimed water uses.

A. Kimley-Horn will update the service area build-out population projections (and associated wastewater demand estimates) developed in the City's wastewater collection system master plan as the basis for projected influent flows and loads for the new greenfield Pollard Road WRF.

B. Kimley-Horn will perform an Ecological Assessment of WWTP #3 and Pollard Road WRF with a focus on evaluation of natural resources to be considered in the assessment of on-site alternatives. The investigation will provide necessary information to assess potential wetland, surface water, and listed species impacts for further consideration in later design and permitting stages. The effort will include a desktop assessment and field visit(s) to confirm general limits and conditions and will result in a technical memorandum summarizing the findings. The Ecological Assessment will also include guidance for permitting considerations for various State and federal permit compliance and to comply with any listed species survey protocols, if applicable. A desktop review will be performed of species listed as endangered, threatened, or special concern (listed species) that are known to occur or likely to occur within the project site or vicinity. GIS databases, including the Florida Natural Areas Inventory (FNAI) biodiversity matrix, the Florida Fish and Wildlife Conservation Commission

(FWC) Bald Eagle Nest data, and the U.S. Fish and Wildlife (FWS) Information for Planning and Consultation (IPAC) resource list, will be reviewed for known occurrences of listed species and potential suitable habitats. The findings of the desktop review and an outline of listed species with a high, medium, and low probability for occurring within each project route and its close vicinity will be provided. No species-specific listed species surveys and no formal wetland delineations will be conducted as part of this task. A draft of the Ecological Assessment technical memorandum will be prepared and submitted to the City for review. Kimley-Horn will prepare for and facilitate a review meeting to receive comments on and facilitate discussion on the draft technical memorandum. A final Ecological Assessment to incorporate various stakeholder and client comments and edits will be provided as part of this task.

C. Kimley-Horn will use the data collected from site visits, engineering and operations staff discussions, and biological and hydraulic modeling results to develop process treatment and capacity alternatives designed to meet 12 MGD AADF with AWT effluent within the next 10 years. The alternatives will consider 5-stage Bardenpho oxidation ditch treatment trains with conventional and membrane filtration secondary treatment options. The alternatives will consider surface and fine bubble diffused aeration.

The following alternatives will be evaluated. Kimley-Horn will define the scope for each alternative and develop a 20-year life cycle cost. Wharton-Smith will provide the capital cost estimate for each alternative.

- 3 MGD oxidation ditch (surface and diffused aeration) with conventional secondary treatment (clarifier & filter)
- 4 MGD oxidation ditch (surface and diffused aeration) with conventional secondary treatment (clarifier & filter)
- 6 MGD oxidation ditch (surface and diffused aeration) with conventional secondary treatment (clarifier & filter)
- 6 MGD oxidation ditch (surface and diffused aeration) with membrane filtration secondary treatment

Each alternative will include an evaluation of the applicable technologies for the following components for the greenfield treatment plant:

- Headworks with fine screens and grit removal system
- Side-stream, pass-through, and no flow equalization
- 5-stage Bardenpho biological treatment
- Aeration/biological treatment process controls
- Flow splitting to clarifiers or membrane tanks
- RAS/WAS pump station
- Tertiary filtration (membrane or disc filtration)
- Disinfection
- Reclaimed water storage/pumping
- Wet weather storage
- Reject water storage
- Biosolids digestion/sludge holding and dewatering system alternatives (up to 4 alternatives)
- Operations building with electrical room alternatives (up to 3 alternatives)
- Electrical building
- Chemical storage building

D. Kimley-Horn will prepare for and conduct an initial workshop with City staff to discuss details to include with each alternative to be evaluated. Items to review during the workshop include biological and process treatment alternatives, preferred site layouts, site access, occupied building alternatives, electrical building alternatives, and biosolids/dewatering system alternatives.

E. Based on the initial workshop discussions, Kimley-Horn will prepare a draft alternatives evaluation summary report and site schematics that will include process treatment and capacity expansion alternatives. The following details will be included in the report deliverable. The summary report will be prepared in a format suitable for inclusion in a FDEP SRF planning document.

1. Flow projections 20-year
2. Waste stream characterization
3. Influent loadings
4. Biological models
5. State point analysis
6. Alternatives evaluation
7. PFD
8. Site schematic
9. Electrical system narrative
10. SCADA system narrative
11. Cyber and site security system narrative
12. Capital cost opinion
13. 20-year life cycle cost opinion

F. Kimley-Horn will submit the draft alternatives evaluation report for the City's review. Kimley-Horn will prepare for and conduct a second workshop with City staff to discuss the draft alternatives evaluation and receive comments from the City.

G. Kimley-Horn will revise the draft alternatives report based on comments received during the workshop and submit the revised report for the City's review. Kimley-Horn will prepare for and conduct a third workshop City staff to receive comments on the revised alternatives report. Comments received during the workshop will be incorporated into the final alternatives report deliverable. The final alternatives report deliverable will include the selected Pollard Road WRF Facility Plan alternative for the initial 12.0 MGD facility with expansion concepts to 24.0 MGD. The Pollard Road WRF Facility Plan will include process flow diagrams, site plans, equipment lists, construction cost opinion, and construction phasing plan with critical funding and capacity triggers.

Task 3 – Water Campus Visioning

With the One Water concept in mind, the City has a 50-year vision to create a Water Campus on the City owned property surrounding the existing WRF #3. This Water Campus will ultimately consist of a state of the art 24 MGD water recycling facility providing advanced treatment and producing high quality recycled water effluent that will feed the sapphire necklace with water for irrigation, industrial uses, and wetland recharge. The Water Campus will also include a new advanced water treatment facility that will provide additional treatment of the high-quality recycled water for direct potable reuse. The City's vision is to make the Water Campus accessible to the public through roadway and trail connections that will encourage visitors to learn about the City's One Water vision at an on-campus learning center. The Campus may include other sustainable features such as a floating solar farm on the existing reclaimed water storage pond, aquifer storage and recovery wells, and possibly a regional biosolids processing center that will create a marketable fertilizer product.

A. Kimley-Horn will meet with City planning staff to gain an understanding of future development and infrastructure plans in and around the Water Campus vicinity.

B. Kimley-Horn will conduct a workshop with City staff as a brainstorming session to identify specific elements to include in the 50-year vision in addition to the improvements described above. The Water Campus vision will consider other known development and infrastructure on the adjacent properties as identified by the City. Items to review during the workshop include campus layout, campus amenities, site access, public spaces and buildings, and other sustainable features.

C. Based on the initial workshop discussions, Kimley-Horn will prepare a draft 50-year vision summary report and site schematics that will include site layout and features.

D. Kimley-Horn will submit the draft 50-year vision summary report to the City for review.

E. Kimley-Horn will prepare for and conduct a second workshop with City staff to discuss the draft 50-year report and receive comments from the City.

F. Kimley-Horn will revise the draft report based on comments received during the workshop and submit the revised report for the City's review. Kimley-Horn will prepare for and conduct a third workshop City staff to receive comments on the revised 50-year vision report. Comments received during the workshop will be incorporated into the final alternatives report deliverable.

G. The final submittal will include a summary report with narratives of major elements, budget estimates, 3-dimensional site renderings mounted on 24" x 36" backboards depicting the Water Campus, aerial fly-through video, and up to six 24" x 36" posters mounted on backboards depicting the Water Campus.

H. Kimley-Horn will contract directly with Straughn Trout (Architect) to prepare conceptual renderings of up to three alternatives for the new operations building and the Water Campus Learning Center.

I. Kimley-Horn will attend a City Council workshop to present the 50-year vision with City staff.

Task 4 – 12" Forcemain Condition Assessment

A. V&A Consulting will perform a condition assessment of the existing 12-inch force main to verify that it is suitable for long-term use in the transfer of flow from WWTP #2 to WRF #3.

    a. V&A will conduct a site visit to determine potential locations to insert and retrieve a free-swimming leak and gas pocket detection tool.

    b. V&A will utilize a subconsultant to deploy a free-swimming leak and gas pocket detection tool. The results of this inspection will be utilized to determine the location of up to 4 test pit locations to determine pipe wall thickness.

    c. V&A shall conduct a confined space entry if required for evaluation of the pipe. The assessment will be performed by a 2-person crew. V&A will provide the confined space safety and testing equipment required for V&A personnel to conduct the assessment. The field assessment will include the following:

        i. Qualitative condition assessment observations are subjective and based upon the evaluator's expertise.

        ii. Visually assess safely accessible surfaces of the pipeline.

        iii. Rate conditions using the VANDA® Concrete and Metallic Condition Indexes.

iv. Visually assess the coatings on the pipe by noting defect areas and severity in accordance with ASTM D610. The general location and size of defects that may or may not require repair will be annotated on a schematic relative to notable features,

v. Document observations using digital photographs.

vi. Measure the pipe wall thickness using A-scan ultrasonic testing (UT) on the pipe. A schematic showing the number and location of the measurements will be provided.

vii. Measure relative pipe wall thickness using pulsed eddy current technology for all area of the pipe exposed. A grid showing wall loss will be provided

viii. Measure pit depth where significant metallic corrosion pitting is observed and UT measurements are not successful. A pit depth gauge will be used for measurements.

ix. Measure soil resistivity using the Wenner four-electrode method in requested locations.

x. Collect and test soil samples for as received and saturated resistivities, pH, and concentrations of chlorides, sulfates, and bicarbonates.

d. V&A will prepare an inspection report that describes the field assessment methods, activities, results, and conclusions. The report will include photographs of the existing conditions, data tables, and graphical and illustrative figures, as required, to present the information gathered during this assessment. The locations and severity of defects will be noted, and the current condition of the structure regarding its state of degradation will be described. A draft electronic copy of the report will be submitted for review. Comments will be incorporated, and a final electronic copy will be provided.

Task 5 – WWTP #2 to WWTP #3 Forcemain Alternatives Evaluation

Desktop WWTP #2 to WWTP #3 Forcemain Route Evaluation

A. KMAC will update the current wastewater system model to include 5-year planning increments. The current model includes 10-year planning increments. The 5-year planning increments will assist in infrastructure improvement planning for WWTP #2 decommissioning. The wastewater flow projections developed in the One Water Master Plan will be updated by Kimley-Horn then used for this task.

B. A wastewater transmission calibration protocol will be developed to adequately calibrate the existing dry weather scenarios currently included in the hydraulic model. The calibration will be completed within the WWTP #2 study area and not the entire model. Model calibration data will be collected in a collaboration between KMAC, Wright-Pierce, and the City. The calibration data will include the following:

a. Lift station drawdown and pressure tests (up to 10 locations)

b. Flow monitoring of up to 5 lift station locations for up to 2 weeks during the August and September time periods.

c. Available flow and pressure SCADA data provided by the City.

The collected filed data will be used to compare to hydraulic model output to identify non-conforming data. Output comparisons will be compared and summarized in table and graphs. During the calibration effort, areas will be identified that are recommended for subsurface utility engineering (SUE) to verify pipe diameter, material, and location.

C. Kimley-Horn will contract directly with CivilSurv to provide subsurface utility engineering (SUE) services to verify pipe diameter, material, and location along the forcemain route. CivilSurv will provide soft digs at up to 100 test hole locations.

D. Once the model is calibrated, KMAC will work with the project team to identify forcemain route alternatives for conveying wastewater from WWTP #2 to LS 1050. Up to 9 model scenarios will be performed including the following:

   a. Converting the existing WWTP #2 master lift station feeding the treatment facility to a master lift station conveying all flows to LS 1050 with the following options:

      i. Pumping through a combination of the existing 12-inch forcemain and new force mains to LS 1050.

      ii. All new forcemains to LS 1050

   b. Redirecting some of the WWTP #2 service area lift stations to pump independently to LS 1050 through manifolded connections to the WWTP #2 to LS 1050 forcemain.

E. KMAC will evaluate timing of improvements and for what time period the City can use the existing 12-inch forcemain to transfer the flow once WWTP #2 is decommissioned.

F. KMAC will summarize the modeling results in a WWTP #2 to WWTP #3 Forcemain Alternatives Evaluation technical memorandum. The technical memorandum will include a summary of the model results, model calibration, document the assumptions and criteria used to develop all the model scenarios, options and recommendations for future wastewater system infrastructure and operations.

G. KMAC will prepare a draft technical memorandum for the City's review and conduct a workshop to go over the model and receive comments. KMAC will address comments and incorporate the updates into the final technical memorandum.

H. Kimley-Horn will contract directly with Madrid Geotechnical Services to perform a desktop study to determine and gather any existing geotechnical information that may be available from previous projects such as roadway improvement projects along the proposed routes.

   a. The desktop study of the two proposed routes will consist of providing general soil survey information on the various types of soils present along the proposed routes' corridors, groundwater and seasonal high-water levels and copies of U.S. Geological Survey (USGS) and Soil Conservation Service (SCS) maps. The study also consists of reviewing and providing available geotechnical exploration findings and data performed as close as possible to the proposed routes. In addition to the desktop analysis, the scope includes up to ten pavement cores that may be utilized to obtain asphalt and roadway base information for the evaluation and cost estimates. Locations of completed pavement cores are anticipated to be provided as GPS coordinates.

b. Geotechnical information obtained for the evaluation will be summarized in the technical memorandum and will include the following items:

    i. A brief discussion of the planned construction.
    ii. An appendix containing all existing geotechnical exploration findings and data obtained from nearby projects.
    iii. General evaluation of the subsurface soils and recommendations concerning the suitability of the subsurface soils based on collected existing data.
    iv. Pavement section thicknesses, if obtained.

WWTP #2 to WWTP #3 Forcemain Route Recommendations

I. Based on the results from the forcemain alternatives evaluation, Wright Pierce will prepare a technical memorandum summarizing two pipeline route alternatives for the force main design. The two routes will be discussed and agreed upon with the City prior to starting this work. Wright-Pierce will summarize each force main route and develop associated plan view base maps using ESRI's ArcMap and available aerials. Topographic survey work and development of CADD drawings is not included in this scope of work. Based upon the gathered available information, the technical memorandum will provide a recommended route for alignment of the proposed force main. Wright-Pierce shall perform the following tasks as part of the route analysis:

    a. Data Collection: Wright Pierce will collect and review available background information for the project including the following:

        i. The most recent maps, atlas information, as-built drawings, and GIS data provided by the City, Florida Department of Transportation (FDOT), and other applicable organizations.

        ii. Existing aerials, surveys, easements, ROW records, soils investigation reports, maintenance records, and other plans or reports that may be pertinent to the project.

        iii. Utility design tickets will also be requested from Sunshine State One Call Service (811) to identify and list the utility owners within each corridor and to request utility atlas information or record drawings, if available. Utility locating, flagging, or marking is not included as part of the utility design ticket.

    b. Site Visits: Key Wright-Pierce design personnel will conduct up to four site visits to perform the following tasks:

        i. Review and obtain data as needed to confirm and supplement original design or record drawings and to assist in the development of schematic base plans.

        ii. Take photographs of existing conditions and constraints along the proposed routes including: easements, major roadway crossings, drainage ditches, wetlands, waterways, buildings, property, or other items that may be impacted by the proposed force main.

    c. Geotechnical Evaluation: Kimley-Horn will contract directly with Madrid Geotechnical Services to perform the services described in Task 17 below.

d. Natural Resource Assessment: Kimley-Horn scientists will evaluate natural resources within two pipeline corridor alternatives, roughly 7 miles each. The investigation will provide necessary information to assess potential wetland, surface water, and listed species impacts for further consideration in later design and permitting stages. The effort will include a desktop assessment and field visit(s) to confirm general limits and conditions and will result in a technical memorandum summarizing the findings. The Natural Resource Assessment will also include guidance for permitting considerations to comply with various State and federal permits with any listed species survey protocols and permitting, if applicable. A desktop review will be performed of species listed as endangered, threatened, or special concern (listed species) that are known to occur or likely to occur within the project site or vicinity. GIS databases, including the Florida Natural Areas Inventory (FNAI) biodiversity matrix, the Florida Fish and Wildlife Conservation Commission (FWC) Bald Eagle Nest data, and the U.S. Fish and Wildlife (FWS) Information for Planning and Consultation (IPAC) resource list, will be reviewed for known occurrences of listed species and potential suitable habitats. The findings of the desktop review and an outline of listed species with a high, medium, and low probability for occurring within each project route and its close vicinity will be provided. No species-specific listed species surveys and no formal wetland delineations will be conducted as part of this task. A draft of the Natural Resource Assessment technical memorandum will be prepared and submitted to the City for review. Kimley-Horn will prepare for and facilitate a review meeting to receive comments on and facilitate discussion on the draft technical memorandum. A final Natural Resource Assessment technical memorandum to incorporate various stakeholder and client comments and edits will be provided as part of this task.

e. Traffic Impacts: Wright-Pierce will conduct a field review for both routes to gather a better understanding of the existing conditions and document those features that might be impacted during construction such as roadways, pedestrian, and bicycle facilities. Perform a review for potential lane closures or detour analysis for each route. Lane closures will follow the policies and procedures for both FDOT and the City of Winter Haven. Coordinate with the City of Winter Haven to determine if any roadway segments on either route will need a Traffic Impact Study. In addition, we will coordinate with the FDOT on the existing state roads that will be affected by each route.

f. Disturbance to Public: Wright-Pierce will perform an evaluation that assesses the impacts the pipeline would have along each route to the public in the form of businesses, apartment complexes, schools, hospitals, doctor offices, school and public transportation bus stops, churches, fire stations etc. Recommendations for future types of Public Outreach Services (i.e., notifications, public meetings, newsletters, etc.) would be recommended for the final route design.

g. Base Map Preparation: Wright-Pierce will prepare preliminary maps of the two routes using aerials, contour data, GIS data (parcels/ROW), and as-built drawings. Existing features including utilities will be primarily based upon existing GIS data provided by the City. Maps for each route are anticipated to include plan views only.

h. Routing Analysis: Wright-Pierce will evaluate proposed methods of construction such as open cut and trenchless technology and will indicate areas where the force main is anticipated to be installed by open cut, HDD, or other trenchless methods. For anticipated locations with HDD installation, WP will review available space for work zones and pipe

staging. Constraints and potential conflicts with existing utilities will be identified, in addition to how construction methods may impact vehicle and pedestrian traffic control. Other factors to be considered during the route analysis and discussed within the technical memorandum include:

i. Available ROW, easements, and City owned property
ii. Easement and property acquisition
iii. Location, size, and types of existing utilities
iv. Available space for pipeline installation and required work areas
v. Impacts to residents and businesses
vi. Current and planned FDOT or City roadway improvements
vii. Access for maintenance of the force main
viii. Environmental areas of concern and construction impacts
ix. Hydraulics
x. Permitting requirements

i. Wright Pierce will prepare a draft WWTP #2 to WWTP #3 Route Recommendations report summary of the geotechnical information, environmental considerations, maintenance of traffic, public impacts, existing utilities, construction methods, and permitting requirements. Wharton Smith will prepare a construction cost estimate for each forcemain route. Wright Pierce will submit the draft Route Recommendations report to the City for review.

j. Wright Pierce will prepare for and conduct a workshop with City staff to discuss the draft Route Recommendations report and receive comments from the City.

k. Wright Pierce will revise the draft Route Recommendations report based on comments received during the workshop and submit the revised Route Recommendations report for the City's review.

l. Wright Pierce will prepare for and conduct a second workshop with City staff to receive comments on the revised Route Recommendations Report. Comments received during the workshop will be incorporated into the final Route Recommendations report deliverable.

m. Based upon the information gathered, the Route Recommendations Report will provide a recommended route for alignment of the proposed forcemain. The Route Recommendations Report will also include a summary of the permits required for the recommended option and summarize items to be considered during the final design.

Task 6 – WWTP #2 Decommissioning and Wastewater Transfer Pump Station Master Plan

A. Wright-Pierce and BEC will coordinate with City staff to develop a physical condition assessment of WWTP #2 and existing reclaimed water pump station and storage tanks. The purpose of this condition assessment is to determine what improvements to WWTP #2 would be needed to keep the facility online for a specified period of time if the transfer of flow from WWTP #2 to WRF #3 was not able to happen immediately. This task will include condition assessments for mechanical and electrical systems. The condition assessment will be based solely on visual observations and plant staff interviews.

B. Wright-Pierce will obtain and review existing data for WWTP #2. This will include as-built or design drawings, the facility's operating permit, the latest permit renewal application documents, any administrative orders issued by FDEP, 24-months of DMRs, and any other recent reports prepared

by the City or its consultants that address the condition or operation of WWTP #2. The results of this review will be used to inform our team that will perform the site visit and used in the development of the Condition Assessment Technical Memorandum.

C. Wright-Pierce will perform a site visit at WWTP #2 to assess the overall condition of the facilities. This assessment is meant to be a visual observation coupled with interviews of the facility's operating staff. It is anticipated that Wright-Pierce will include various disciplines (process, electrical, structural, I&C) into this site visit to get a complete understanding of issues at the facility. The site visit will include an initial meeting with the operators to obtain their input on the plant's operation and identify existing issues. This meeting will also allow our team an opportunity to begin asking questions that will set the stage for the rest of the site observations.

D. Following the site visit, Wright-Pierce will develop a draft Condition Assessment Technical Memorandum that will summarize the results of the data review and site visit and identify what improvements must be made to the facility if it is required to stay online for any period of time. This analysis will include summary of topics such as plant hydraulics, treatment process assessment, solids handling system assessment, communication system assessment, electrical system assessment, visually assessed structural conditions, and an overall code assessment. Additionally, the technical memorandum will provide thoughts on the maintenance of plant operations (MOPO) during decommissioning and considerations for site decommissioning/demolition. Material testing is not included in this scope of work. Material testing recommendations will be included in the final submittal that can be provided as an amendment to this contract.

E. Wright Pierce will prepare for and conduct a workshop with City staff to discuss the draft Condition Assessment technical memorandum and receive comments from the City.

F. Wright Pierce will revise the draft Condition Assessment technical memorandum based on comments received during the workshop and submit the revised Condition Assessment technical memorandum for the City's review.

G. Using the information developed in the WWTP #2 condition assessment, 12-inch forcemain condition assessment, and forcemain alternatives evaluation Wright-Pierce will develop the WWTP #2 Decommissioning and Wastewater Transfer Pump Station technical memorandum. The technical memorandum will identify WWTP #2 decommissioning recommendations, final site layout including the transfer pump station and reclaimed water system, list of recommended capital improvements with construction cost opinions, and timing/schedule recommendations. This technical memorandum will include an evaluation of the need for flow equalization, preferred pipeline route and sizing, and provide a conceptual layout of the new Transfer Pump Station at WWTP #2.

H. Wright-Pierce will prepare a draft technical memorandum for the City's review and conduct a workshop to review the recommendations and receive comments. Wright-Pierce will address comments and incorporate the updates into the final report.

Task 7 – WWTP #2 Reclaimed Water Transmission System Alternatives Evaluation

As part of this project, WWTP #2 will be decommissioned, and wastewater will be conveyed to WRF #3 for treatment. Although WWTP #2 will be decommissioned, the reclaimed water ground storage tanks and pump station at WWTP #2 will still be needed to maintain satisfactory pressures in the reclaimed water distribution system during high demand periods. Improvements will be needed to enable reclaimed water to be transferred from WWTP #3 through the reclaimed water distribution

system to the to the reclaimed water ground storage tank(s) at WWTP #2. Other reclaimed water distribution system improvements may also be needed.

A. KMAC will update the existing reclaimed water model with a new diurnal pattern based on available SCADA data. During the One Water Master Plan, SCADA was not available and since then the City has adjusted data collection procedures. Additional pressure and/or flow data available for the system will be used to verify the model. No other major updates are anticipated in the model.
B. Using the validated model, KMAC will revisit the reclaimed water transfer scenarios created for the City as part of a separate project. This scenario analyzed the transfer of reclaimed water from WRF #3 to WWTP #2 reclaimed water storage tanks. The scenario will confirm transfer of reclaimed water from the Water Campus to WWTP #2 in the existing, near-term, and long-term scenarios.
C. KMAC will summarize the water system model results in a Hydraulic Modeling technical memorandum. The technical memorandum will include a summary of the results, model calibration and validation, document the assumptions and criteria used to develop the model scenarios, and options and recommendations for future reclaimed water system infrastructure and operations.
D. KMAC will prepare a draft technical memorandum for the City's review and conduct a workshop to go over the model and receive comments. KMAC will address comments and incorporate the updates into the final report.

E. Using the reclaimed water system model results technical memorandum produced by KMAC, Wright-Pierce will develop the WWTP #3 to WWTP #2 Transmission Route technical memorandum. This technical memorandum will present the recommend route and pipe size for the WWTP #3 to WWTP #2 reclaimed water conveyance system. The technical memorandum will include timing recommendations. Wharton-Smith will provide construction cost estimates for the recommended route.

F. Wright-Pierce will prepare a draft technical memorandum for the City's review and conduct a workshop to review the recommendations and receive comments. Wright-Pierce will address comments and incorporate the updates into the final report.

G. The City will design the reclaim water transmission system from the intersection of Motor Pool Road and Ave Y NE to the existing ground storage tank at WWTP #2. Wright Pierce will provide review comments on the 60%, 90%, and Final Plans provided by the City.

WWTP #2 Reclaimed Water Pump Station Master Plan

H. Using the reclaimed water distribution system modeling results, Wright Pierce will develop the WWTP #2 Reclaimed Water Pump Station technical memorandum. This technical memorandum will present the recommend route and pipe size for the Water Campus to WWTP #2 reclaimed water conveyance system and recommended layout for the WWTP #2 reclaimed water pumping and storage system. The technical memorandum will include construction cost opinions provided by Wharton Smith and timing recommendations.

I. Wright Pierce will prepare a draft technical memorandum and conduct a workshop to review the recommendations and receive comments. Wright Pierce will address comments and incorporate the updates into the final technical memorandum.

Task 8 – WWTP #2 Decommissioning, Wastewater Transfer Pump Station, and Reclaimed Water Pump Station Master Plan

A. Using the information developed in the WWTP #2 condition assessment, 12-inch forcemain condition assessment, forcemain alternatives evaluation, and reclaimed water pump station master plan, Wright-Pierce will develop the WWTP #2 Decommissioning and Wastewater Transfer Pump Station and Reclaimed Water Pump Station Master Plan report. The report will identify WWTP #2 decommissioning recommendations, final site layout including the transfer pump station and reclaimed water system, list of recommended capital improvements with construction cost opinions, and timing/schedule recommendations. This report will include an evaluation of the need for flow equalization, preferred pipeline route and sizing, and provide a conceptual layout of the new Transfer Pump Station at WWTP #2.

B. Wright-Pierce will prepare a draft technical memorandum for the City's review and conduct a workshop to review the recommendations and receive comments. Wright-Pierce will address comments and incorporate the updates into the final report.

Task 9 – WWTP #3 Facility Plan

WWTP #3 Condition Assessment

A. Kimley-Horn will obtain and review available data for WWTP #3 such as design drawings, as-built or record drawings, operating permits, most recent permit renewal application documents, 24-months of DMR data, and other pertinent information provided by the City that may have a bearing and impact on the planning, design, approval, permitting, construction, or operation of WWTP #3. Kimley-Horn may request additional clarifying records and information, as required based on the initial review of available data.

B. Following the project data review, Kimley-Horn will conduct a site visit with the design team and City operations staff to collect additional field data, equipment details, and discuss operational challenges and preferences for incorporation into the conceptual planning and design phases. It is anticipated the field visit will include visual observations by supporting disciplines such as process mechanical, civil, electrical, architectural, structural, and other supporting staff as required. An initial meeting with WWTP#3 operations staff will be conducted in association with this site visit to obtain input on plant operations and identify existing issues requiring immediate and long-term attention.

C. V&A will provide a planning level condition assessment of critical underground infrastructure, as well as pre-treatment structures and mechanical equipment. V&A will provide a technical memorandum summarizing their findings and will provide recommendations for additional testing and condition assessments.

D. Kimley-Horn will coordinate with V&A and anticipates the following related services to complement V&A's assessment work:

    a. Initial coordination with V&A regarding objectives and requirements for the assessment

    b. Senior process mechanical expertise is anticipated at 20 hours per week during the 2-week duration of the field assessment

    c. Review of V&A assessment findings for incorporation to planning and design efforts associated with the project.

E. Utilizing information from the project data review, field verification site visit, and the findings of the V&A critical infrastructure condition assessment, Kimley-Horn and BEC will develop a physical condition assessment of WWTP #3 as a foundation for the alternatives evaluation phase of the project. The Condition Assessment Technical Memorandum will summarize the results of the assessment effort including topics such as: plant hydraulics, treatment process assessment, solids handling system assessment, communication system assessment, electrical system assessment, visually assessed structural conditions, and an overall code assessment. Kimley-Horn will prepare a draft TM for submission to the City; will prepare for and facilitate a review meeting to discuss the findings of the condition assessment; and will prepare a final TM incorporating comments and input from the review process.

WWTP #3 Site Survey

F. Kimley-Horn will provide topographic and limited boundary survey services including High-Definition Surveys (HDS) laser scanning integrated with conventional survey methods to capture geographic data associated with the WWTP #3 site. HDS scanning will include the exterior walls of all surface structures, accessible interior walls, structural and mechanical features, existing surface utility improvements, hardscape improvements, and roadways. Survey efforts will include the activities listed below.

    a. Establish horizontal and vertical control points around the facilities. These control points will be set at intervals sufficient to accurately collect the data required. The control points will be tied to the existing control survey data from the Pollard Road Water Production Facility project. The control will be related to the Florida State Plane Coordinate System and North American Vertical Datum of 1988 (NAVD88).

    b. Utilize an HDS scanner and drone technology to perform multiple scans of the WWTP buildings and appurtenances such as: utility poles, valves, hydrants, and exposed pipelines, communication risers, transformers, other surface utility features, and hardscape.

    c. Collect data on soft surfaces such as the grassed and dirt areas through conventional survey methods. Specific items necessary for design criteria such as bay heights, weirs and invert elevations will be collected using an integration of conventional and HDS survey methods. Some building corner locations, cross sections on hard surfaces, and finished floor elevations will also be collected by both methods for the purpose of quality control.

    d. Provide additional field verification during base model creation efforts including two additional sites of targeted field verification.

    e. Review the recorded plats and property appraiser's maps and locate accessible property corners to determine the apparent limits of the Wastewater Treatment Plant #3 site and the adjoining public rights-of-way.

    f. Provide location services following subsurface utility investigations.

    g. Merge the data extracted from the HDS scans with the data collected from the conventional and subsurface surveys to produce a high density point cloud for use in preparing a 3D model of the existing site.

G. Kimley-Horn will contract directly with CivilSurv to provide subsurface utility engineering (SUE) services associated with the WWTP #3 site. CivilSurv will designate and locate the underground utilities and will perform detailed measurements of the accessible stormwater and sanitary manhole structures. CivilSurv will also provide soft digs at up to 100 test hole locations and survey services to locate critical buried infrastructure.

H. Kimley-Horn will coordinate with and oversee CivilSurv to provide SUE services for development of an underground utility map adequate to facilitate design of the new, modified, or relocated facilities as part of the project..

I. Kimley-Horn will utilize both the published high-resolution point cloud, site survey and SUE data to develop a three-dimensional (3D) Building Information Model (BIM) of the existing WWTP #3 facilities and utilities at true scale and located geospatially. The 3D model of the existing plant will include components from all design disciplines, including process, building mechanical, electrical, structural and architecture. Model components will include basins, buildings, pads, mechanical and electrical equipment, and exposed piping, all at with actual elevations and dimensions. 3D modeling of the below grade piping and duct bank elevations and locations will be created through a combination of information obtained by the SUE Contractor, existing Record Drawings, Operator knowledge, and, finally, through subsequent soft digs to verify missing or conflicting information on buried assets.

J. Kimley-Horn will perform clash detection within the model throughout its development. Conflicts will be resolved through discussions with Operations Staff as well as field investigations. This effort is critical as the model will be used as a base for development of project design elements including modifications to existing or proposed new unit processes, structures, buildings, and site civil features. This modeling effort will improve the accuracy of the final design documents, resulting in improved construction sequencing and a reduction in conflicts and changes during construction.

WWTP #3 Alternatives Evaluation

It is anticipated there will be a need to provide treatment of wastewater using WWTP#3 facilities for at least the next ten years and that the City recognizes the value in its existing infrastructure investment that must be considered as part of an optimized buildout plan for the City's consolidated water recycling objectives. Further, it is recognized that the existing biological treatment basins have maintenance and repair needs requiring attention in order to provide reliable facility operations with increasing flows anticipated at the facility.

K. Following the collection and review of current data and coordination meeting with City staff, Kimley-Horn will develop revised flow projection and capacity phasing recommendations. This phasing plan will provide recommended triggers for capacity increase needs and alternatives for capacity accommodation through use of WWTP#3 facilities or future proposed greenfield facilities.

L. Kimley-Horn will develop a draft Flows, Loads & Phasing Technical Memorandum based on the previous efforts. This technical memorandum will summarize the projected flows, capacity triggers and phasing plan. The technical memorandum will also establish a water quality design basis utilizing the previously collected and summarized data in combination with the sampling plan results.

M. Kimley-Horn will develop a sampling plan to facilitate validation and characterization of influent water quality parameters in support of detailed biological process design. The sampling program will be conducted by City staff for approximately three to five weeks and will be coordinated with

City staff as soon after notice to proceed as feasible. Kimley-Horn will provide technical support, as required, to City staff for the execution of the required sampling plan including coordination with the City's outside laboratory testing service.

N. Kimley-Horn will develop BioWin™ models to represent the existing WWTP#3 biological process and proposed alternatives to be used for evaluation and validation of interim alternatives and improve reliability for biological nutrient removal within the existing treatment facility. Kimley-Horn will use data from a month of relatively stable influent loading conditions and operations to calibrate the models. Steady-state model calibration will be performed consistent with Water Environment Research Foundation (WERF) methods.

O. Kimley-Horn will prepare for and conduct an initial workshop with City staff to discuss details to include with the alternatives to be evaluated. Items to review during the workshop include biological and process treatment alternatives, preferred site layouts, MOPO, and electrical system impacts.

P. Based on the initial workshop discussions, Kimley-Horn will develop alternatives for cost effective utilization of existing treatment basins to achieve short to mid-range reliability for treatment of the City's wastewater. Alternatives will facilitate necessary maintenance and repairs and may include reconfiguration or repurposing of existing basins and equipment to achieve a modified treatment flow regime. An interim repair scenario and up to four interim alternatives are to be considered. Kimley-Horn will prepare a draft Treatment Process Alternatives technical memorandum that will include process treatment and capacity expansion alternatives. In coordination with the biological treatment process alternatives, Kimley-Horn will develop alternative configuration(s), site layout(s), and equipment selections for WWTP#3 mechanical unit processes requiring reliability or operational improvements including pre-treatment facilities, secondary clarification, filtration, disinfection, de-chlorination, and biosolids management. Each alternative will be evaluated for life-cycle cost considerations, operational considerations, constructability, and compatibility with future phasing. The technical memorandum will be prepared in a format suitable for inclusion in a FDEP SRF planning document.

Q. Kimley-Horn will submit the draft Treatment Process Alternatives technical memorandum for the City's review. Kimley-Horn will prepare for and conduct a second workshop with City staff to discuss the draft alternatives evaluation and receive comments from the City. Additionally, the results of the process modeling and calibration for these alternatives will be presented along with recommendations for consideration in subsequent design phases. Kimley-Horn will revise the draft treatment process alternatives technical memorandum based on comments received during the workshop.

R. In coordination with the biological treatment process alternatives, Kimley-Horn will develop alternative configuration(s), site layout(s), and equipment selections for WWTP #3 mechanical unit processes requiring reliability or operational improvements including: pre-treatment facilities, secondary clarification, filtration, disinfection, de-chlorination, and biosolids management. Each alternative will be evaluated for life-cycle cost considerations, operational considerations, constructability, and compatibility with future phasing.

S. Kimley-Horn will prepare a draft Mechanical Process Alternatives TM presenting multiple options for each unit process described above. Alternatives presentation will consider operational reliability, capital and O&M cost implications, as well as any impacts or design implications which may be associated with the biological treatment alternatives presented in parallel. Following the

Alternatives Workshop detailed below, City input and comments will be incorporated into a final Mechanical Process Alternatives TM.

T. Kimley-Horn will prepare for and facilitate two workshops with City staff to present the developed biological treatment and mechanical process alternatives and recommendations. The first workshop will be an exploratory workshop used to discuss and explore alternatives for consideration for biological process and other treatment unit alternatives. The second workshop will be utilized to validate these concepts with the City and develop a consensus approach to advancing design of primary, secondary, and tertiary treatment improvements.

WWTP #3 Facility Plan

U. Kimley-Horn will prepare a draft conceptual facility plan presenting developed alternatives and recommendations for the proposed improvements to WWTP#3. It is expected that no less than three alternatives for each planned improvement will be documented in the plan. The facilities plan will culminate with a planning level capital program developed based on the alternatives evaluation and workshop, and will include:

    a. Narrative summary of the alternatives evaluation performed
    b. Process flow diagram
    c. Illustrative sketches/plans
    d. Permitting requirements
    e. Life-cycle cost analysis
    f. Conclusions and recommendations

V. Kimley-Horn will prepare for and facilitate a review meeting with City staff to review the concepts presented in the draft facilities plan and receive comments for incorporation into the final plan. Kimley-Horn will summarize comments received during the facilities plan review meeting and document revisions to be incorporated. Comments received and consensus concepts captured during the review process will be incorporated into a final conceptual facility plan for City use in further project design and funding program development.

Task 10 – CIP Development/Summary/Critical Path Program Phasing

A. Kimley-Horn and sub-consultants will conduct a workshop with City staff and City's financial planners to review the individual facility plans, CIP items, and project budgets. The project team will work with staff to rank projects and develop a critical path phasing program.

B. Kimley-Horn and sub-consultants will make adjustments based on available funding and impacts to rates/bond ratings.

C. Kimley-Horn and sub-consultants will consolidate the individual facility plans into a comprehensive program plan with critical path phasing schedule. The comprehensive program plan will be summarized in a technical memorandum containing a summary of the program capital projects, project triggers, and critical path phasing schedule.

D. Kimley-Horn and sub-consultants will conduct a workshop with City staff to review and adjust the comprehensive program plan and finalize the technical memorandum based on comments.

Task 11 – Accelerated Design Package

Based on discussions at the project scoping meeting, it is anticipated that an accelerated design package will be advanced in the first year of the project. This package will consist of replacement of the WWTP #3 existing course screens and associated minor rehabilitation of the existing pre-treatment structure; as well as WWTP #3 tertiary filtration replacement as recommended and accepted by the City during the mechanical process alternatives task. The primary objective of this phase of work is to develop detailed design documents including plans, specifications, and other associated information to support Wharton-Smith's development of a guaranteed maximum price (GMP-1) to be negotiated with the City. Construction services are limited to bid and submittal review services as field activities are not anticipated to begin prior to the start of the next phase of this project. Construction phase services are not included in this scope of work.

A. Kimley-Horn will provide coordination and design support to Wharton-Smith who will lead the following tasks throughout the design and GMP development stages:

    a. Develop and update a detailed "open book" cost model based on current market conditions to confirm budgets and help guide design decisions.

    b. Develop a construction management plan and schedule in advance of construction with input from the design team.

    c. Provide alternative system evaluations and constructability reviews throughout design, including conceptual cost evaluations of construction alternatives.

    d. Develop a procurement package for GMP 1.

    e. Assist in the construction permitting process.

    f. Provide procurement support for selection of key subcontractors and suppliers.

    g. Provide construction estimates and GMP assistance.

B. Kimley-Horn will incorporate comments obtained from the mechanical process alternatives workshop and coordinate with BEC to develop GMP-1 to a 60% level of design including drawings, technical specifications, equipment and instrument list. A draft design review workshop will be conducted to receive review comments from the City and Wharton-Smith.

C. Kimley-Horn will incorporate the 60% review comments and coordinate with BEC to develop the Final Design to a 90% level of completion including plans, technical specifications, equipment and instrumentation list, and typical details. A draft construction package will be provided to the City and Wharton-Smith for review. Review comments will be discussed in the GMP-1 design review workshop. Comments from the workshop will be incorporated into the final construction documents to be utilized for development of GMP-1 and for permitting purposes.

D. Following completion of the final GMP-1 design package, Kimley-Horn will provide permit support for the following permit activities.

    a. Florida Department of Environmental Protection (FDEP) Minor Revision to a Wastewater Facility

Utilizing the Final GMP-1 Design Package, Kimley-Horn will prepare and submit an Application for a Minor Revision to a Wastewater Facility or Activity to FDEP in accordance with the requirements of Chapter 62-620.325, F.A.C. and respond to up to 2 requests for additional information (RAI). Permit application fees (if applicable) will be paid directly by the City or may be paid by Kimley-Horn at City request as a direct reimbursable expense.

b. City of Winter Haven Building Department

Kimley-Horn in coordination with Wharton-Smith and BEC, will prepare and submit the application for a Building Permit for the proposed improvements to the City's Building Department and respond to up to 2 RAI's. Permit application fees (if applicable) will be paid directly by the City.

E. Kimley-Horn will coordinate with Wharton-Smith to review the proposed list of bidders and prepare the bid package. Kimley-Horn will attend one pre-bid site visit for GMP-1. Up to 2 addenda will be prepared to address comments from GMP-1 bidders. Kimley-Horn will attend the GMP-1 bid review workshop conducted by Wharton-Smith and the City to review and discuss the apparent low bidders and associated costs.

F. Kimley-Horn will review up to 50 contractor submittals including shop drawings, schedule of values, construction schedules, material submittals and equipment data to determine conformance with design concepts and compliance with the construction documents. It will be the intent that all shop drawings, material and equipment submittals will be reviewed and returned within the timeframe(s) specified in Division 1 of the construction documents. For critical elements, if alerted in advance, Kimley-Horn will endeavor to shorten the turnaround time.

Deliverables:

Task	*Start/Duration*	*Deliverables*
Task 1 - PM	March 2025 / 550 days	• Meeting Minutes • Project Schedule/Schedule Updates • Permit Submittals • Monthly Pay Requests • Off-site Meeting Notes • WEFTEC Schedule/Notes
Task 2 – Pollard Rd. WRF	March 2025 / 424 days	• Population Projections • Ecological Site Assessment • Alternatives Evaluation TM • Pollard Road WRF Master Plan
Task 3 – Water Campus	March 2025 / 498 days	• 50-year Vision Master Plan
Task 4 – FM Condition	March 2025 / 484 days	• 12” FM Condition Assessment Report
Task 5 – WWTP #2 FM	June 2025 / 279 days	• WWTP #2 to WWTP #3 Forcemain Alternatives Evaluation TM • WWTP #2 to WWTP #3 Pipeline Route Recommendations TM
Task 6 – WWTP #2 Pump Station	March 2025 / 445 days	• WWTP #2 Condition Assessment TM • WWTP #2 Decommissioning and Wastewater Transfer Pump Station TM
Task 7 – WWTP #2 RCW	March 2025 / 209 days	• Reclaimed Water System Alternatives Evaluation TM • Reclaimed Water Pump Station TM
Task 8 – WWTP #2 Facility Plan	March 2025 / 74 days	• WWTP #2 Decommissioning, Wastewater Transfer Pump Station, and Reclaimed Water Pump Station Master Plan Report
Task 9 – WWTP #3 Facility Plan	March 2025 / 403 days	• WWTP #3 Condition Assessment TM • WWTP #3 Treatment Process Alternatives TM. • WWTP #3 Mechanical Process Alternatives TM • WWTP #3 Facility Master Plan
Task 10 – CIP	May 2026 / 105 days	• Capital Projects Program and Phasing TM
Task 11 – Accelerated Design	March 2025 / 550 days	• WWTP #3 Headworks and Filter Modifications 60% Plans • WWTP #3 FDEP Permit Modification Application • WWTP #3 Headworks and Filter Modifications 90% Plans • WWTP #3 Headworks and Filter Modifications Final Plans • WWTP #3 Headworks and Filter Modifications GMP

Information Provided by Client:

It shall be Design-Builder's responsibility to evaluate and verify the veracity and accuracy of the data, surveys, tests, reports, plans, specifications, results, and other information it chooses to rely upon in performing the Work assigned by this Task Order.

Additional Services if required:

Services requested that are not specifically included will be provided under a new and separate Agreement or can be performed on an hourly basis upon written authorization.

Schedule:

Kimley-Horn will begin services upon receipt of an executed Agreement. The above services will be provided as expeditiously as possible to meet a mutually agreed upon schedule.

Method of Compensation:

Kimley-Horn will complete the above scope of services for a lump sum fee of $7,717,500, inclusive of expenses.

Description	***Lump Sum Fees***
Task 1 – Project Management/Data Collection	$1,980,000
Task 2 – Pollard Road Water Recycling Facility Plan	$485,000
Task 3 – Water Campus Visioning	$450,000
Task 4 – 12" FM Condition Assessment	$197,500
Task 5 – WWTP #2 to WWTP #3 Forcemain Alternatives Evaluation	$840,000
Task 6 – WWTP #2 Decommissioning and Wastewater Transfer Pump Station Master Plan	$183,000
Task 7 – WWTP #2 Reclaimed Water Transmission System Alternatives Evaluation	$105,000
Task 8 – WWTP #2 Decommissioning, Wastewater Transfer Pump Station, and Reclaimed Water Pump Station Master Plan	$27,000
Task 9 – WWTP #3 Facility Plan	$1,385,000
Task 10 – CIP Development/Summary/Critical Path Program Phasing	$215,000
Task 11 – Accelerated Design Package	$1,850,000
Total Lump Sum Fees	***$7,717,500***

ID	Task Name	Start	Finish	Duration
1	**Winter Haven WRF Initial Conceptual Planning and Design Services**	**Thu 3/20/25**	**Mon 9/21/26**	**393 days**
2	**Task 1 - Project Management/Data Collection**	**Thu 3/20/25**	**Fri 9/11/26**	**386 days**
3	Kick-Off Meeting	Thu 3/20/25	Thu 3/20/25	0 days
4	Data Collection	Thu 3/20/25	Wed 10/1/25	140 days
5	Bi-Weekly Progress Meetings	Thu 3/20/25	Fri 9/11/26	540 edays
6	WRF Site Visits	Thu 4/3/25	Wed 7/2/25	90 edays
7	2025 WEFTEC	Mon 9/29/25	Fri 10/3/25	4 edays
8	**Task 2 - Pollard Road Water Recycling Facility Plan**	**Thu 3/20/25**	**Mon 5/18/26**	**302 days**
9	Population Projections	Thu 4/17/25	Mon 7/7/25	81 edays
10	Ecological Site Assessment	Thu 3/20/25	Fri 7/18/25	120 edays
11	Alternatives Evaluation	Thu 3/20/25	Mon 5/18/26	302 days
12	Workshop 1	Thu 3/20/25	Thu 4/3/25	14 edays
13	Draft Alternatives Evaluation Report	Thu 4/3/25	Thu 12/4/25	245 edays
14	City Review Period	Thu 12/4/25	Thu 12/11/25	7 edays
15	Workshop 2	Thu 12/11/25	Thu 12/18/25	7 edays
16	Revised Alternatives Evaluation Report	Thu 12/18/25	Wed 3/18/26	90 edays
17	City Review Period	Wed 3/18/26	Wed 3/25/26	7 edays
18	Workshop 3	Wed 3/25/26	Wed 4/1/26	7 edays
19	Final Alternatives Evaluation Report	Wed 4/1/26	Mon 5/18/26	47 edays
20	**Task 3 - Water Campus Visioning**	**Thu 3/20/25**	**Fri 7/31/26**	**356 days**
21	Planning Staff Meeting	Thu 4/3/25	Thu 4/10/25	7 edays
22	Workshop 1	Thu 3/20/25	Thu 4/3/25	14 edays
23	Draft 50-Year Vision Report	Thu 4/3/25	Thu 10/16/25	196 edays
24	City Review Period	Thu 10/16/25	Thu 10/23/25	7 edays
25	Workshop 2	Thu 10/23/25	Thu 10/30/25	7 edays
26	Revised 50-Year Vision Report	Thu 10/30/25	Thu 2/19/26	112 edays
27	City Review Period	Thu 2/19/26	Thu 2/26/26	7 edays
28	Workshop 3	Thu 2/26/26	Thu 3/5/26	7 edays
29	Final 50-Year Vision Report	Thu 3/5/26	Wed 6/3/26	90 edays
30	50-Year Vision Graphics	Thu 3/5/26	Wed 6/3/26	90 edays
31	Learning Center Renderings	Thu 3/5/26	Wed 6/3/26	90 edays
32	City Council Presentation	Wed 6/3/26	Fri 7/31/26	58 edays
33	**Task 4 - 12" Forcemain Condition Assessment**	**Thu 3/20/25**	**Thu 7/17/25**	**85 days**
34	Condition Assessment	Thu 3/20/25	Mon 5/19/25	60 edays
35	Draft Report	Mon 5/19/25	Wed 6/18/25	30 edays
36	City Review Period	Wed 6/18/25	Wed 6/25/25	7 edays
37	Review Workshop	Wed 6/25/25	Wed 7/2/25	7 edays
38	Final Report	Wed 7/2/25	Thu 7/17/25	15 edays
39	**Task 5 - WWTP #2 to WWTP #3 Forcemain Alternatives Evaluation**	**Mon 7/7/25**	**Fri 4/17/26**	**205 days**

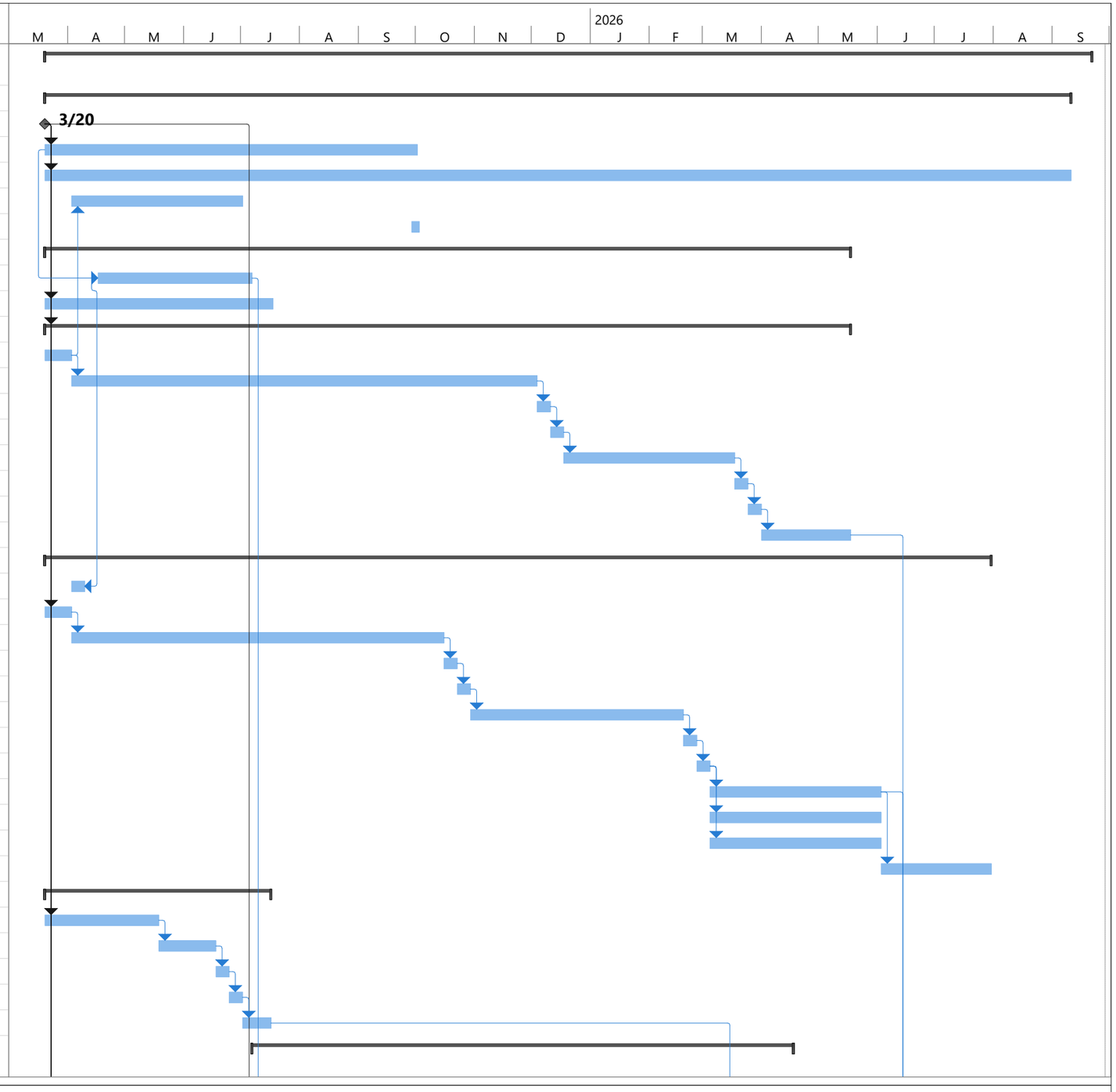

Project: 2025.02.25 Schedule W
Date: Tue 2/25/25

Task | Split | Milestone | Summary | Project Summary | Manual Summary

ID	Task Name	Start	Finish	Duration
40	**Desktop Route Alternatives Evaluation (9 Alternative**	**Mon 7/7/25**	**Fri 12/5/25**	**109 days**
41	Update Wastewater System Model	Mon 7/7/25	Fri 8/8/25	32 edays
42	Model Calibration	Fri 8/8/25	Mon 9/8/25	31 edays
43	Identify/Evaluate Route Alternatives	Mon 9/8/25	Wed 10/8/25	30 edays
44	Draft Technical Memorandum	Wed 10/8/25	Fri 11/7/25	30 edays
45	City Review Period	Fri 11/7/25	Fri 11/14/25	7 edays
46	Review Workshop	Fri 11/14/25	Fri 11/21/25	7 edays
47	Final Technical Memorandum	Fri 11/21/25	Fri 12/5/25	14 edays
48	**Selected Alternatives Detailed Evaluation (2 Alternati**	**Fri 11/7/25**	**Fri 4/17/26**	**116 days**
49	**Data Collection**	**Fri 11/7/25**	**Mon 12/8/25**	**22 days**
50	Site Visits	Fri 11/7/25	Mon 12/8/25	31 edays
51	Geotechnical Evaluation	Fri 11/7/25	Mon 12/8/25	31 edays
52	Environmental Assessment	Fri 11/7/25	Mon 12/8/25	31 edays
53	Traffic Impacts	Fri 11/7/25	Mon 12/8/25	31 edays
54	Disturbance to Public	Fri 11/7/25	Mon 12/8/25	31 edays
55	Base Map Preparation	Mon 12/8/25	Thu 1/8/26	31 edays
56	Routing Analysis	Mon 12/8/25	Thu 1/8/26	31 edays
57	Draft Route Reccomendations Report	Mon 12/15/25	Thu 1/15/26	31 edays
58	City Review Period	Thu 1/15/26	Thu 1/22/26	7 edays
59	Workshop 1	Thu 1/22/26	Thu 1/29/26	7 edays
60	Revised Route Reccomendations Report	Thu 1/29/26	Mon 3/2/26	32 edays
61	City Review Period	Mon 3/2/26	Mon 3/9/26	7 edays
62	Workshop 2	Mon 3/9/26	Mon 3/16/26	7 edays
63	Final Route Reccomendations Report	Mon 3/16/26	Fri 4/17/26	32 edays
64	**Task 6 - WWTP #2 Decommissioning and Wastewater Transfer Pump Station Master Plan**	**Thu 3/20/25**	**Mon 6/15/26**	**323 days**
65	Physical Condition Assessment & Data Review	Thu 3/20/25	Mon 6/16/25	62 days
66	Draft Condition Assessment Technical Memorandun	Thu 3/20/25	Mon 5/19/25	60 edays
67	City Review Period	Mon 5/19/25	Mon 5/26/25	7 edays
68	Review Workshop	Mon 5/26/25	Mon 6/2/25	7 edays
69	Final Condition Assessment Technical Memorandun	Mon 6/2/25	Mon 6/16/25	14 edays
70	**WWTP #2 Decommissioning and Wastewater Transfer Pump Station Technical Memorandum**	**Mon 3/16/26**	**Mon 6/15/26**	**65 days**
71	Draft Technical Memorandum	Mon 3/16/26	Fri 5/1/26	46 edays
72	City Review Period	Fri 5/1/26	Fri 5/8/26	7 edays
73	Review Workshop	Fri 5/8/26	Fri 5/15/26	7 edays
74	Final Technical Memorandum	Fri 5/15/26	Mon 6/15/26	31 edays
75	**Task 7 - WWTP #2 Reclaimed Water Transmission System Alternatives Evaluation**	**Thu 3/20/25**	**Wed 10/15/25**	**149 days**
76	Update/Validate Reclaim System Model	Thu 3/20/25	Fri 4/18/25	29 edays
77	Revise Distribution Scenario Analysis	Fri 4/18/25	Mon 5/19/25	31 edays

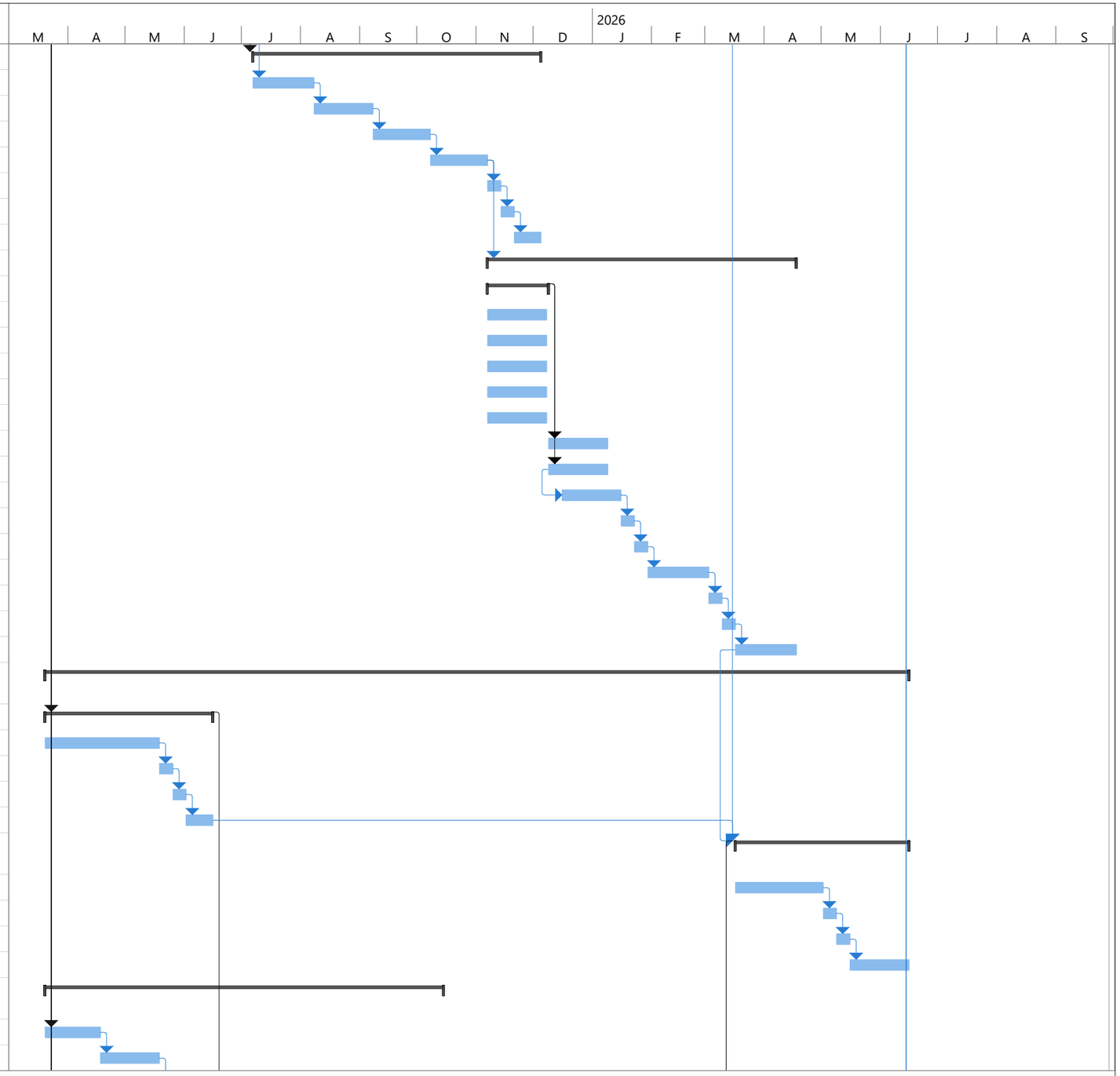

Project: 2025.02.25 Schedule W
Date: Tue 2/25/25

Task | Split | Milestone | Summary | Project Summary | Manual Summary

ID	Task Name	Start	Finish	Duration
78	Draft Model Results Technical Memorandum	Mon 5/19/25	Wed 6/18/25	30 edays
79	City Review Period	Wed 6/18/25	Wed 6/25/25	7 edays
80	Review Workshop	Wed 6/25/25	Wed 7/2/25	7 edays
81	Final Model Results Technical Memorandum	Wed 7/2/25	Fri 8/1/25	30 edays
82	Draft Transmission Route Technical Memorandum	Fri 8/1/25	Mon 9/1/25	31 edays
83	City Review Period	Mon 9/1/25	Mon 9/8/25	7 edays
84	Review Workshop	Mon 9/8/25	Mon 9/15/25	7 edays
85	Final Transmission Route Technical Memorandum	Mon 9/15/25	Wed 10/15/25	30 edays
86	QC Support for City's Transmission Segment Design	Thu 3/20/25	Wed 8/27/25	160 edays
87	Draft Reclaimed Water Pump Station Technical Memorandum	Mon 6/16/25	Fri 8/15/25	60 edays
88	City Review Period	Fri 8/15/25	Fri 8/22/25	7 edays
89	Review Workshop	Fri 8/22/25	Fri 8/29/25	7 edays
90	Final Reclaimed Water Pump Station Technical Memorandum	Fri 8/29/25	Mon 9/29/25	31 edays
91	**Task 8 - WWTP #2 Decommissioning, Wastewater Transfer Pump Station, and Reclaimed Water Pump Station Master Plan**	**Mon 3/30/26**	**Mon 6/15/26**	**55 days**
92	Draft Report	Mon 3/30/26	Fri 5/1/26	32 edays
93	City Review Period	Fri 5/1/26	Fri 5/8/26	7 edays
94	Review Workshop	Fri 5/8/26	Fri 5/15/26	7 edays
95	Final Report	Fri 5/15/26	Mon 6/15/26	31 edays
96	**Task 9 - WWTP #3 Facility Plan**	**Thu 3/20/25**	**Mon 4/27/26**	**287 days**
97	**Data Review/Physical Site Visit & Operations Coordin**	**Thu 3/20/25**	**Mon 9/1/25**	**117 days**
98	Draft Condition Assessment Technical Memorandun	Thu 3/20/25	Wed 6/18/25	90 edays
99	City Review Period	Wed 6/18/25	Wed 6/25/25	7 edays
100	Review Workshop	Wed 6/25/25	Wed 7/2/25	7 edays
101	Final Condition Assessment Technical Memorandun	Wed 7/2/25	Mon 9/1/25	61 edays
102	**Topographic, Limited Boundary, & HDS Scanning Serv**	**Thu 3/20/25**	**Tue 9/16/25**	**128 days**
103	SUE (Task 16)	Thu 3/20/25	Fri 7/18/25	120 edays
104	3D Building Information Model	Fri 7/18/25	Tue 9/16/25	60 edays
105	Sampling Plan & Technical Support	Thu 3/20/25	Fri 7/18/25	120 edays
106	Phasing Plan/Flows & Loadings TM	Fri 7/18/25	Fri 11/14/25	119 edays
107	Calibrated Biowin Model	Fri 11/14/25	Thu 2/12/26	90 edays
108	Workshop 1	Fri 7/18/25	Fri 8/1/25	14 edays
109	Draft Treatment Process Alternatives Technical Memorandum	Fri 8/1/25	Thu 10/30/25	90 edays
110	City Review Period	Thu 10/30/25	Thu 11/6/25	7 edays
111	Workshop 2	Thu 11/6/25	Thu 11/13/25	7 edays
112	Mechanical Equipment Selection/Life Cycle Cost Evaluation	Thu 11/13/25	Mon 1/12/26	60 edays
113	Final Treatment Process Alternatives Technical Memorandum	Mon 1/12/26	Fri 3/13/26	60 edays

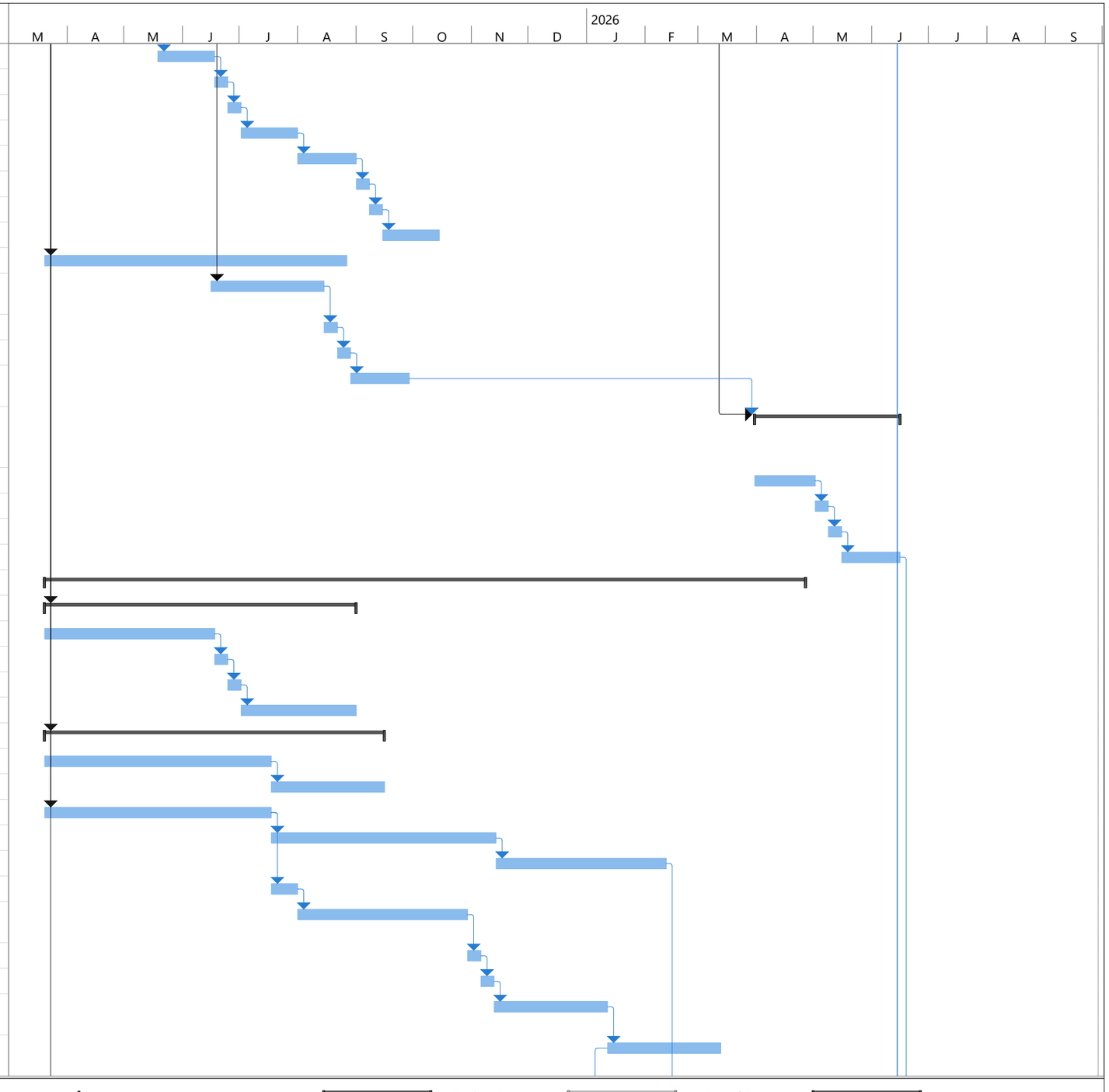

Project: 2025.02.25 Schedule W
Date: Tue 2/25/25

Task | Split | Milestone | Summary | Project Summary | Manual Summary

ID	Task Name	Start	Finish	Duration
114	Biological Workshops	Thu 2/12/26	Mon 4/13/26	60 edays
115	Draft Conceptual Facility Plan	Mon 1/12/26	Fri 3/13/26	60 edays
116	City Review Period	Fri 3/13/26	Fri 3/20/26	7 edays
117	Review Workshop	Fri 3/20/26	Fri 3/27/26	7 edays
118	Final Conceptual Facility Plan	Fri 3/27/26	Mon 4/27/26	31 edays
119	**Task 10 - CIP Development Summary Critical Path Program Phasing**	**Mon 6/15/26**	**Mon 9/28/26**	**75 days**
120	CIP Review Workshop	Mon 6/15/26	Mon 7/6/26	21 edays
121	CIP Adjustments	Mon 7/6/26	Wed 8/5/26	30 edays
122	Draft Comprehensive Program Plan	Mon 6/15/26	Fri 8/14/26	60 edays
123	City Review Period	Fri 8/14/26	Fri 8/21/26	7 edays
124	Review Workshop	Fri 8/21/26	Fri 8/28/26	7 edays
125	Final Comprehensive Program Plan	Fri 8/28/26	Mon 9/28/26	31 edays
126	**Task 11 - Accelerated Design Package**	**Thu 3/20/25**	**Mon 4/6/26**	**272 days**
127	Kick-Off Meeting	Thu 3/20/25	Thu 4/10/25	21 edays
128	60% Design	Thu 4/10/25	Tue 10/7/25	180 edays
129	90% Design	Tue 10/7/25	Mon 1/5/26	90 edays
130	Final Design	Mon 1/5/26	Fri 3/6/26	60 edays
131	GMP Support	Fri 3/6/26	Mon 4/6/26	31 edays

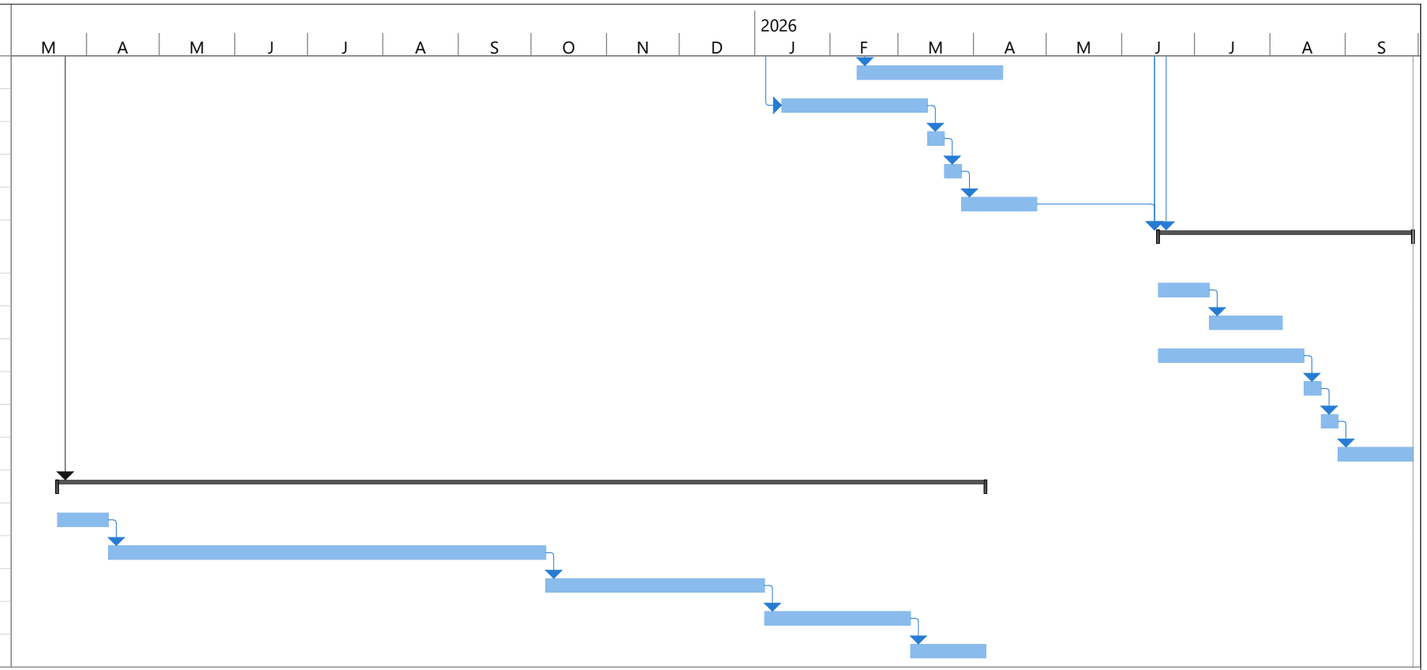

Project: 2025.02.25 Schedule W
Date: Tue 2/25/25

Task | Split | Milestone | Summary | Project Summary | Manual Summary

DATE: February 25, 2025

TO: Honorable Mayor and City Commissioners

FROM: T. Michael Stavres, City Manager

SUBJECT: Contract with Ballard Partners, Tampa, Florida, for Federal Level Funding Advocacy

BACKGROUND

The City of Winter Haven is pursuing support and funding opportunities from state and federal agencies for on-going community priorities. Many of the City's initiatives are innovative and forward thinking, such as the dark fiber network and One Water Master Plan. Communication and support at the state and federal level could make a substantial difference in realizing opportunities.

Ballard Partners is widely known for their effectiveness at coordinating at all levels of state and federal government. The attached contract and proposal includes efforts to advocate on behalf of Winter Haven at the federal level and monitor developments in legislation and policy that might affect the City. Efforts to coordinate with federal level agencies such as the Environmental Protection Agency, Department of Interior, and the legislative branches are included.

FINANCIAL IMPACT

This proposal will retain Ballard Partners for one year, beginning March 1, 2025, at a cost of $10,000 per month for a total of $120,000 with the option to renew for one additional year. These funds are budgeted in FY 25 and in subsequent years, in the Water department's Professional Services line item 402-08-310-3105.

STRATEGIC PLAN ALIGNMENT

- Pillar: Responsible Government
- Goal: 6.2 – Engage and participate in legislative matters (State & Federal) and advocate for Home Rule and local priorities.
- Strategy: 6.2.1 – Strategically engage in local, State and national professional organizations and coalitions.

RECOMMENDATION

Staff recommends the City Commission approve the attached contract with Ballard Partners and authorize the City Manager, or his designee, to take any and all actions necessary thereto.

ATTACHMENTS

- Contract for Services Agreement (Federal) between COWH & Ballard Partners
- Purchase Form Affidavits

CONTRACT FOR SERVICES

This Contract is entered into between the City of Winter Haven ("the Client"), 451 3rd Street NW, Winter Haven, FL 33881, and Ballard Partners, Inc., a Florida corporation, ("the Firm"), 601 13th Street NW, Suite 250S, Washington, D.C. 20005.

RECITALS

WHEREAS, the Client wishes to retain the services of the Firm in order that the Firm may provide strategic consulting and advocacy services to the Client in connection with its business with the United States government; and

WHEREAS, the Firm wishes to provide such representation as the Client may from time to time require; and

WHEREAS, the parties have agreed to the terms under which the Firm will represent the Client and wish to memorialize their agreement in writing.

Now, therefore, in consideration of the mutual covenants herein contained and intending to be legally bound hereby, the parties agree as follows:

1. **Term of Agreement**. This agreement shall become effective on March 1, 2025 and shall remain effective until March 1, 2026 (initial term), at which time the City has the option of extending this agreement for additional one (1) year terms provided that all parties agree to such extension(s). After the initial term, this agreement may be terminated within thirty (30) days written notice by either party.

2. **Duties of the Firm**. It shall be the Firm's duty to consult with the Client and advocate on its behalf those issues the Client deems necessary and appropriate before the Federal government. It shall further be the Firm's duty to inform the Client of developments in legislation and policy relevant to the Client's operations. The Firm also provides Strategic Communications services through its Ballard Media Group and those services are not included as part of this Agreement.

3. **Duties of the Client**. It shall be the Client's duty to provide the Firm the information necessary to best represent the Client. It shall also be the Client's duty to timely compensate the Firm for its services.

4. **Compensation**. The Firm shall receive from the Client $10,000 a month for this agreement, plus the reasonable costs associated with the representation, including but not limited to, necessary registration fees; and travel

expenses such as hotel, air fare, car services and meals , excluding costs typically associated with the operation of an office such as overhead, staff, and equipment. The fee shall be paid in monthly installments of $10,000 a month, beginning March 1, 2025, and continuing to be due on the first day of each month until the termination of the agreement. The Firm will bill costs monthly.

5. **Public Records**. The parties acknowledge that Florida Statute 119.0701(2)(a) requires the following recitation be included in any public agency contract for services:

5.1. To the extent that Florida Statute 119.0701 applies to the services hereunder, the Firm agrees to keep and maintain public records required by the Client to perform the services specified herein.

5.2. Upon request from the Client's custodian of public records, the Firm shall provide the Client with a copy of the requested records or allow the records to be inspected or copied within a reasonable time at a cost that does not exceed the cost provided in Chapter 119 of the Florida Statutes, as may be amended from time to time, or as otherwise provided by law.

5.3. Ensure that public records that are exempt or confidential and exempt from public records disclosure requirements are not disclosed except as authorized by law for the duration of this Agreement term and following completion of this Agreement if the Firm does not transfer the records to the Client.

5.4. Upon completion of this Agreement, transfer, at no cost, to the Client all public records in possession of the Firm or keep and maintain public records required by the Client to perform the service. If the Firm transfers all public records to the Client upon completion of this Agreement, the Firm shall destroy any duplicate public records that are exempt or confidential and exempt from public records disclosure requirements. If the Firm keeps and maintains public records upon completion of this Agreement, the Firm shall meet all applicable requirements for retaining public records. All records stored electronically must be provided to the Client upon request from the Client's custodian of public records, in a format that is compatible with the Client's information technology systems.

IF THE FIRM HAS QUESTIONS REGARDING THE APPLICATION OF CHAPTER 119, FLORIDA STATUTES, TO THE FIRM'S DUTY TO PROVIDE PUBLIC RECORDS RELATING TO THIS AGREEMENT, CONTACT THE CITY'S CUSTODIAN OF PUBLIC RECORDS AT 863-291-5600, records@mywinterhaven.com, 451 THIRD STREET, N.W., WINTER HAVEN, FLORIDA 33881.

If the Firm does not comply with the Client's request for records as set forth in this Agreement, the Client shall enforce this Agreement, which may include immediate termination.

6. **Sovereign Immunity; Limitations of Client's Liability**.

(a) Client is a sovereign Florida municipal government. The Parties agree that nothing contained in the Contract Documents shall be construed to waive the Client's sovereign immunity. With respect to the matter of compensation for work performed, or the price of goods sold, the Parties agree that the total potential liability of the Client to the Firm shall not exceed the agreed-upon price established in the Contract Documents, or any related purchase order, subject to annual appropriation performance contingencies. For all other matters, the Parties agree that the total potential liability of the Client to the Firm shall not exceed the limits of the Client's potential liability as determined by the State of Florida's waiver of sovereign immunity set forth in the version of § 768.28(5) of the Florida Statutes in effect as of the Effective Date, regardless of whether any such obligations are based in tort, contract, statute, strict liability, or negligence, product liability or otherwise. The Parties also agree that the Client shall not be liable to the Firm for any indirect, incidental, consequential, special, exemplary, or punitive damages of any kind or nature or interest for the period before judgment.

(b) The Parties agree that the maximum value and monetary limits of any individual express Client indemnification and all collective express Client indemnifications found in the Contract Documents, if any exist, shall not exceed the limits of the Client's potential liability as determined by the State of Florida's waiver of sovereign immunity set forth in the version of § 768.28(5) of the Florida Statutes in effect as of the Effective Date, regardless of whether any such obligation to indemnify or the underlying cause for indemnity is based in tort, contract, statute, strict liability, or negligence, product liability or otherwise. Notwithstanding anything in the Contract Documents to the contrary, to the extent that the Client has agreed to an express indemnification, the Parties agree that no Client indemnity shall require the Client to defend Firm and no Client indemnity shall indemnify Firm from and against attorneys' fees and costs, fees and costs for experts and witnesses, costs of suit, or any indirect, incidental, consequential, special, exemplary, or punitive damages of any kind or nature or interest for the period before judgment. This limitation provision shall not be construed to create a duty for the Client to indemnify the Firm in the absence of an independent express indemnification clause.

(c) This Section shall survive termination of the Contract and this Addendum.

7. **Required Clauses.**

Pursuant to Florida Statutes, the following provisions are added to the Contract Documents:

(a) *Convicted Vendor List.* A person or affiliate who has been placed on the State of Florida Convicted Vendor List, following a conviction for a public entity crime,

may not submit a bid on a contract to provide any goods or services to a public entity; may not submit a bid on a contract with a public entity for the construction or repair of a public building or public work; may not submit bids on leases of real property to a public entity; may not be awarded or perform work as a contractor, supplier, subcontractor, or consultant under a contract with any public entity; and may not transact business with any public entity, in excess of $35,000.00, for a period of thirty-six (36) months from the date of being placed on the Convicted Vendor List. Firm acknowledges that it is not on the State of Florida Convicted Vendor List and that it is eligible to enter into the Contract, this Addendum, the Contract Documents, and the resulting contract with the Client.

(b) *Scrutinized Companies.* Section 287.135, Florida Statutes, prohibits the Client from contracting with companies for goods or services in any amount if at the time of bidding on, submitting a proposal for, or entering into or renewing a contract if the company is on the Scrutinized Companies that Boycott Israel List, created pursuant to Section 215.4725, F.S. or is engaged in a boycott of Israel; and contracting with companies for goods or services over $1,000,000.00 that are on either the Scrutinized Companies with activities in the Iran Petroleum Energy Sector List, created pursuant to s. 215.473, or are engaged in business operations in Cuba or Syria. Firm acknowledges that it is not on the State of Florida Scrutinized Companies that Boycott Israel list, is not presently engaged in a boycott of Israel, is not on the State of Florida Scrutinized Companies with activities in the Iran Petroleum Energy Sector List, and is not engaged in business operations in Cuba or Syria.

(c) *E-Verify.* By contracting with the Client, the Firm becomes obligated under Florida law to comply with the provisions of Section 448.095(5)(a), Florida Statutes, to register with and use the E-Verify system to verify the work authorization status of all new employees of the Firm and any subcontractor hired by the Firm. If the Firm enters into a contract with a subcontractor, the subcontractor must provide the Firm with an affidavit attesting that the subcontractor does not employ, contract with, or subcontract with, an unauthorized alien. Failure to comply will lead to termination of the Contract, this Addendum, the Contract Documents, and all purchase orders if a subcontractor knowingly violates the statute, the subcontract must be terminated immediately. Any challenge to termination under this provision must be filed in the Circuit Court no later than twenty (20) calendar days after the date of termination. If this Agreement is terminated for a violation of the statute by the Firm, the Firm may not be awarded a public contract for a period of one (1) year after the date of termination.

(d) *No Consideration of Social, Political, and Ideological Interests.* The provisions of Section 287.05701 of the Florida Statutes prohibit local governments from giving preference to a prospective contractor based on the prospective contractor's social, political or ideological interests or requesting documentation from, or considering, a prospective contractor's social, political, or ideological interests when determining if the prospective contractor is a responsible vendor.

(e) *Contracting with Foreign Entities.* By executing this Contract, Firm certifies that it is not owned by the government of the People's Republic of China, the Russian

Federation, the Islamic Republic of Iran, the Democratic People's Republic of Korea, the Republic of Cuba, the Venezuelan regime of Nicolás Maduro, or the Syrian Arab Republic (collectively "Foreign Countries of Concern"), nor is it owned by any agency of or any other entity of significant control of any such government. Further, Firm certifies that no government of a Foreign Country of Concern has a "controlling interest" in Firm as the term is defined in Section 287.138(1)(a) of the Florida Statutes, nor is the Firm organized under the laws of a Foreign Country of Concern, nor does the Firm have its principal place of business located in a Foreign Country of Concern. If this Contract permits the Firm to access the personal identifying information of any individual, Firm agrees to notify the Client in advance of any contemplated transaction that would cause Firm to be disqualified from such access under Section 287.138 of the Florida Statutes. Firm agrees to furnish the Client with an affidavit signed by an officer or representative of the Firm under penalty of perjury at any time and upon request that the statements in this paragraph are true and correct.

(f) *No Coercion for Labor or Services.* By executing this Contract, Firm certifies, pursuant to Section 787.06(13), Florida Statutes under penalty of perjury, that it does not obtain labor or services by the use of coercion, by using or threatening to use physical force against any person; by restraining, isolating, or confining or threatening to restrain, isolate, or confine any person without lawful authority and against her or his will; by using lending or other credit methods to establish a debt by any person when labor or services are pledged as a security for the debt, if the value of the labor or services as reasonably assessed is not applied toward the liquidation of the debt, the length and nature of the labor or services are not respectively limited and defined; by destroying, concealing, removing, confiscating, withholding, or possessing any actual or purported passport, visa, or other immigration document, or any other actual or purported government identification document, of any person; by causing or threatening to cause financial harm to any person; by enticing or luring any person by fraud or deceit; or by providing a controlled substance as outlined in Schedule I or Schedule II of Section 893.03, Florida Statutes, to any person for the purpose of exploitation of that person. Firm agrees to furnish the Client with an affidavit signed by an officer or representative of the Firm under penalty of perjury at any time and upon request that the statements in this paragraph are true and correct.

CITY OF WINTER HAVEN, FLORIDA

_____

By:_____

Title:_____

Date:_____

BALLARD PARTNERS, INC.

_____

By: Brian D. Ballard

Title: President

Date: 2/27/2025

Affidavit Regarding the Use of Coercion for Labor and Services

State of Florida
County of Leon

Name of Vendor: Ballard Partners, Inc., a Florida corporation

Address: 201 E. Park Avenue, 5th Floor, Tallahassee, FL 32301

Phone Number: 850-577-0444

Authorized Representative's Name: Brian D. Ballard

Authorized Representative's Title: President

Effective July 1, 2024, Section 787.06(13), Florida Statutes, requires all nongovernmental entities executing, renewing, or extending a contract with a governmental entity to provide an affidavit signed by an officer or representative under penalty of perjury attesting that the nongovernmental entity does not use coercion for labor or services.

As the person authorized to sign on behalf of the vendor, I certify that the vendor identified above does not:

- Use or threaten to use physical force against any person;
- Restrain, isolate, or confine or threaten to restrain, isolate, or confine any person without lawful authority and against her or his will;
- Use lending or other credit methods to establish a debt by any person when labor or services are pledged as a security for the debt, if the value of the labor or services as reasonably assessed is not applied toward the liquidation of the debt, the length and nature of the labor or services are not respectively limited and defined;
- Destroy, conceal, remove, confiscate, withhold, or possess any actual or purported passport, visa, or other immigration document, or any other actual or purported government identification document, of any person;
- Cause or threaten to cause financial harm to any person;
- Entice or lure any person by fraud or deceit; or
- Provide a controlled substance as outlined in Schedule I or Schedule II of Florida Statute 893.03 to any person for the purpose of exploitation of that person.

Under penalties of perjury, I declare that I have read the foregoing document and that the facts stated in it are true.

Ballard Partners, Inc., a Florida corporation

By: Brian D. Ballard
Its: President

The foregoing instrument was acknowledged before me, by means of □ physical presence or □ online notarization, this 27th day of February, 2025, by Brian D. Ballard, as President of Ballard Partners, Inc., a Florida corporation, on behalf of the said Ballard Partners, Inc., a Florida corporation who ☑ is personally known to me or □ produced a _____ driver's license as identification.

Shanna Kaye Crawley

Notary Public, State of Florida

Commission no.: _____

My commission expires: _____

SHANNA KAYE CRAWLEY
Commission # HH 308838
Expires January 4, 2027

Affidavit Regarding Foreign Countries of Concern

State of Florida
County of Leon

Name of Vendor: Ballard Partners, Inc., a Florida corporation

Address: 201 East Park Avenue, 5th Floor, Tallahassee, FL 32301

Authorized Representative's Name: Brian D. Ballard

Authorized Representative's Title: President

Effective January 1, 2024, Section 287.138, Florida Statutes, prohibits a Florida governmental entity from entering into a contract that may grant or allow access to any individual's personal identifying information unless the contracting entity furnishes an affidavit signed by an officer or representative under penalty of perjury concerning foreign countries of concern.

As the person authorized to sign on behalf of the vendor, I certify that:

- The vendor is not owned by the People's Republic of China, the Russian Federation, the Islamic Republic of Iran, the Democratic People's Republic of Korea, the Republic of Cuba, the Venezuelan regime of Nicolás Maduro, or the Syrian Arab Republic, or by any agency of or any other entity of significant control of any of such foreign country of concern.
- The government of the People's Republic of China, the Russian Federation, the Islamic Republic of Iran, the Democratic People's Republic of Korea, the Republic of Cuba, the Venezuelan regime of Nicolás Maduro, or the Syrian Arab Republic does not have a controlling interest in the vendor.
- The vendor is not organized under the laws of and does not have its principal place of business in the People's Republic of China, the Russian Federation, the Islamic Republic of Iran, the Democratic People's Republic of Korea, the Republic of Cuba, the Venezuelan regime of Nicolás Maduro, or the Syrian Arab Republic.

Under penalties of perjury, I declare that I have read the foregoing document and that the facts stated in it are true. Ballard Partners, Inc., a Florida corporation

By: Brian D. Ballard
Its: President

The foregoing instrument was acknowledged before me, by means of □ physical presence or □ online notarization, this 27th day of February, 2025, by Brian D. Ballard, as President of Ballard Partners, Inc., a Florida corporation, on behalf of the said Ballard Partners, Inc., a Florida corporation who ☑ is personally known to me or □ produced a _____ driver's license as identification.

Shanna Kaye Crawley

Notary Public, State of Florida

Commission no.: _____

My commission expires:_____

SHANNA KAYE CRAWLEY
Commission # HH 308838
Expires January 4, 2027

DATE: March 3, 2025

TO: Honorable Mayor and City Commissioners

VIA: T. Michael Stavres, City Manager
M.J. Carnevale, Deputy City Manager

FROM: Brittany Hart, Public Works Director

SUBJECT: Purchase of Motorola N30 Radios for Emergency Response and Management

---

BACKGROUND

The City of Winter Haven is strengthening its communication infrastructure by deploying a unified radio system across key departments, including Public Works, Parks, Recreation & Culture, the Water Department, Code Enforcement's Disaster Assessment Team, and the City Manager's Office. This investment will enhance real-time coordination for emergency response while also supporting day-to-day operations, such as parade logistics and special events.

Staff intends to purchase 100 Motorola N30 radios, integrating with Polk County's system to improve interoperability and reliability. This investment will eliminate the inefficiencies of fragmented communication methods and reduce reliance on cell networks, which often become unreliable during disasters.

The 100 radios would be split among the departments as follows:

- 30 – Water Department
- 30 – Public Works Department
- 25 – Parks, Recreation and Culture Department
- 12 – Safe Neighborhoods/Damage Assessment
- 3 – City Manager's Office (CMO)

By taking this proactive step, Winter Haven is reinforcing its ability to respond swiftly and effectively in any situation, ensuring improved operational efficiency, faster emergency response, and enhanced city-wide coordination.

FINANCIAL IMPACT

The total cost for 100 Motorola N30 radio units is $414,495.00, with each unit priced at $4,144.95. Additionally, participation in the Polk County Radio System requires an annual fee of $336.00 per unit, resulting in a recurring annual cost of $33,600.00 paid to Polk County.

The Motorola N30 Radio units would be purchase from Motorola Solutions, a sole source vendor and the only company permitted to provide radio equipment that is operated on the Polk County Radio System.

The cost of the radios will be allocated to respective funds based on the units assigned to the fund.

Department	Units	Total Cost	Funding Source
Water Dept	30	$134,428.50	Water & Sewer Fund
Public Works	30	134,428.50	General & Solid Waste Funds
Parks and Recreation	25	112,023.75	General Fund
Code/ Damage Assessment	12	53,771.40	Building/Permit Fund
City Manager's Office	3	13,442.85	General Fund
	100	$448,095.00	

STRATEGIC PLAN ALIGNMENT

- Pillar: Community Safety
- Goal: 5.4 – Ensure local government functions are aligned with community safety best practices.

RECOMMENDATION

Staff recommends that the City Commission approve the purchase of 100 Motorola N30 radios and authorize the City Manager to issue a purchase order in the amount of $414,495.00 to Motorola Solutions. Additionally, the City Manager is authorized to integrate the radios into the Polk County Radio System and take all necessary actions to ensure their full operational readiness prior to the 2025 hurricane season.

ATTACHMENT

- Motorola Solutions Quote

MOTOROLA SOLUTIONS



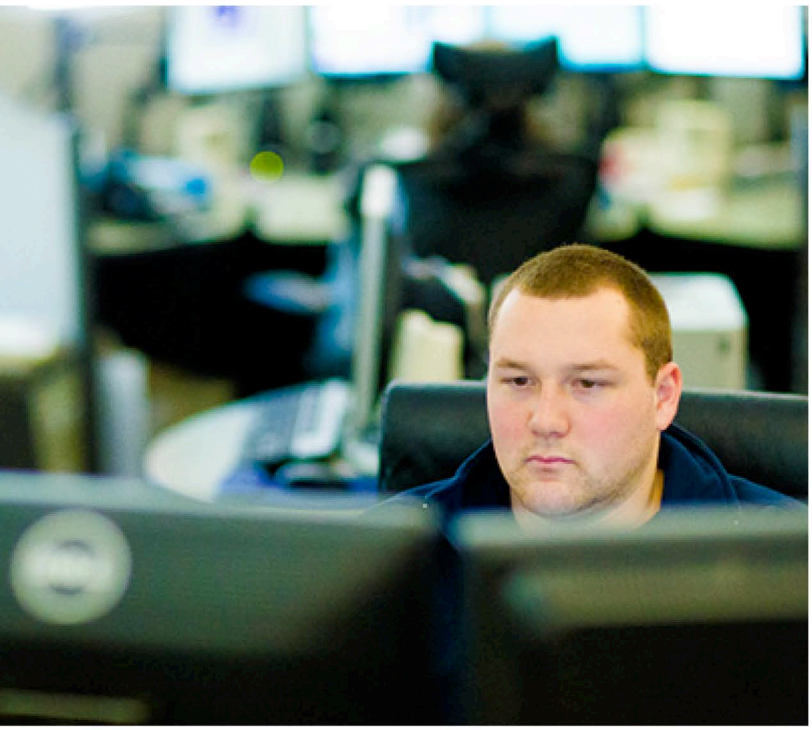

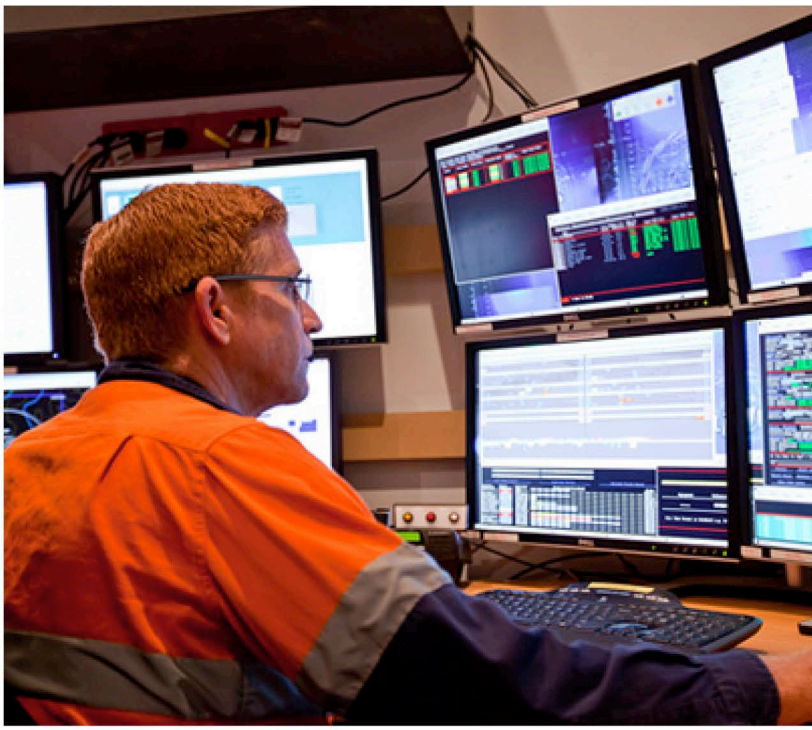

WINTER HAVEN FIRE DEPT, CITY OF

2/10/2025

The design, technical, pricing, and other information ("Information") furnished with this submission is confidential proprietary information of Motorola Solutions, Inc. or the Motorola Solutions entity providing this quote ("Motorola") and is submitted with the restriction that it is to be used for evaluation purposes only. To the fullest extent allowed by applicable law, the Information is not to be disclosed publicly or in any manner to anyone other than those required to evaluate the Information without the express written permission of Motorola.
MOTOROLA, MOTO, MOTOROLA SOLUTIONS, and the Stylized M Logo are trademarks or registered trademarks of Motorola Trademark Holdings, LLC and are used under license. All other trademarks are the property of their respective owners. © 2020 Motorola Solutions, Inc. All rights reserved.

2/10/2025

WINTER HAVEN FIRE DEPT, CITY OF
PO BOX 2277
WINTER HAVEN, FL 33881

Dear Michael Stroud,

Motorola Solutions is pleased to present WINTER HAVEN FIRE DEPT, CITY OF with this quote for quality communications equipment and services. The development of this quote provided us the opportunity to evaluate your requirements and propose a solution to best fulfill your communications needs.

This information is provided to assist you in your evaluation process. Our goal is to provide WINTER HAVEN FIRE DEPT, CITY OF with the best products and services available in the communications industry. Please direct any questions to Luke Tucker at ltucker@emciwireless.com.

We thank you for the opportunity to provide you with premier communications and look forward to your review and feedback regarding this quote.

Sincerely,

Luke Tucker

Motorola Solutions Manufacturer's Representative

Billing Address:
WINTER HAVEN FIRE DEPT, CITY OF
PO BOX 2277
WINTER HAVEN, FL 33881
US

Quote Date: 2/10/2025
Expiration Date: 4/10/2025
Quote Created By:
Luke Tucker
ltucker@emciwireless.com

End Customer:
WINTER HAVEN FIRE DEPT, CITY OF
Michael Stroud
mstroud@mywinterhaven.com

Summary:

Any sales transaction resulting from Motorola's quote is based on and subject to the applicable Motorola Standard Terms and Conditions, notwithstanding terms and conditions on purchase orders or other Customer ordering documents. Motorola Standard Terms and Conditions are found at www.motorolasolutions.com/product-terms.

Line #	Item Number	Description	Qty	Term	List Price	Sale Price	Ext. Sale Price
	APX™ N30	APX N30					
1	H15UCF9PW6AN	APX N30 7/800 MODEL 2 PORTABLE	100		$2,463.00	$1,797.99	$179,799.00
1a	Q387CB	ADD: MULTICAST VOTING SCAN	100		$0.00	$0.00	$0.00
1b	QA00982AH	ADD: SITE SELECTABLE ALERT FOR P25 TRUNKING	100		$0.00	$0.00	$0.00
1c	QA03399AK	ADD: ENHANCED DATA	100		$0.00	$0.00	$0.00
1d	QA08715AA	ADD:BASIC VOICE CONTROL	100		$0.00	$0.00	$0.00
1e	QA00580BA	ADD: TDMA OPERATION	100		$0.00	$0.00	$0.00
1f	G996AU	ADD: PROGRAMMING OVER P25 (OTAP)	100		$0.00	$0.00	$0.00
1g	QA09001AM	ADD: WIFI CAPABILITY	100		$0.00	$0.00	$0.00
1h	QA09007AD	ADD: OUT OF THE BOX WIFI PROVISIONING	100		$0.00	$0.00	$0.00
1i	BD00032AA	ADD: ESSENTIAL CORE BUNDLE	100		$2,244.00	$1,638.12	$163,812.00
1j	QA08853AA	ADD: CPS ENABLEMENT*	100		$0.00	$0.00	$0.00
1k	QA02756AB	ENH: 3600 OR 9600 TRUNKING BAUD SINGLE SYSTEM	100		$0.00	$0.00	$0.00

Any sales transaction following Motorola's quote is based on and subject to the terms and conditions of the valid and executed written contract between Customer and Motorola (the ""Underlying Agreement"") that authorizes Customer to purchase equipment and/or services or license software (collectively ""Products""). If no Underlying Agreement exists between Motorola and Customer, then Motorola's Standard Terms of Use and Motorola's Standard Terms and Conditions of Sales and Supply shall govern the purchase of the Products.
Motorola Solutions, Inc.: 500 West Monroe, United States - 60661 ~ #: 36-1115800

Line #	Item Number	Description	Qty	Term	List Price	Sale Price	Ext. Sale Price
1l	QA09113AA	ADD: BASELINE RELEASE SW	100		$0.00	$0.00	$0.00
2	PSV01S03059A	APX NEXT PROVISIONING WITH CPS*	1		$0.00	$0.00	$0.00
3	LSV01S03085A	APX N50/30 DMS ESSENTIAL W ACC DMG	100	7 YEARS	$645.62	$645.62	$64,562.00
4	PMMN4140A	RM760 IMPRES WINDPORTING REMOTE SPEAKER MICROPHONE, LARGE (IP68)	40		$131.00	$95.63	$3,825.20
5	PMPN4820A	CHGR DESKTOP SINGLE UNIT IMPRES 2 EXT PS US	30		$85.71	$62.57	$1,877.10
6	PMNN4813B	BATT LIION IMPRES 2 IP68 2850T	40		$178.50	$130.31	$5,212.40
7	PMPN4594A	CHGR DESKTOP MULTI UNIT IMPRES 2 1 DISPLAY EXT PS NA/LA/CA	20		$712.86	$520.39	$10,407.80

Sub Total	$429,495.50
Trade-In Discount	-$15,000
Grand Total	$414,495.50

Any sales transaction following Motorola's quote is based on and subject to the terms and conditions of the valid and executed written contract between Customer and Motorola (the ""Underlying Agreement"") that authorizes Customer to purchase equipment and/or services or license software (collectively ""Products""). If no Underlying Agreement exists between Motorola and Customer, then Motorola's Standard Terms of Use and Motorola's Standard Terms and Conditions of Sales and Supply shall govern the purchase of the Products.

DATE: March 4, 2025

TO: Honorable Mayor and City Commissioners

VIA: T. Michael Stavres, City Manager
M.J. Carnevale, Deputy City Manager

FROM: Drew Neubrand, Fire Chief

SUBJECT: Fire Department Purchase of 2 Replacement Fire Engines

---

BACKGROUND

The City's Fire Department operates a fleet of emergency response vehicles to provide daily emergency services to roughly 60,000 City and 49,000 unincorporated county residents and businesses. The Department currently operates:

- Four (4) fire engines
- One (1) tower truck
- One (1) squad/heavy rescue unit

To supplement the core fleet and ensure emergency services are uninterrupted when frontline units are in need of repair and maintenance, the Department maintains:

- Three (3) spare/reserve engines
- One (1) spare/reserve ladder unit

The Department has identified a need to replace vehicle #8072 (purchased in 1998) and #8080 (purchased in 1999). These vehicles have exceeded their operational life expectancy and have become obsolete and unreliable for the needs of the community. If approved, the newly purchased engines will be placed into service as front-line fire engines and designated as Winter Haven Engine 4 and Winter Haven Engine 5. The current Engine 4 (vehicle #8073, purchased in 2016) and Engine 5 (vehicle #8081, purchased in 2016), will move to reserve/spare status.

Two replacement vehicles, consistent with the fleet (Sutphen), are available from South Florida Emergency Vehicles via their agreement with the governmental purchasing cooperative, Sourcewell. Traditional fire department apparatus orders currently have a 36-48 month build time from date of agreement. The opportunity to purchase two fire department apparatus that could be placed into service for the community later this year is very unique.

FINANCIAL IMPACT

Each replacement engine will cost $1,157,850 for a grand total of $2,315,700. Funding for one engine exists in the capital depletion fund. The second engine funding of $1,157,850 was not budgeted for this fiscal year but the expedited availability presents a unique opportunity. The department will utilize $352,310 from the current capital depletion fund and $698,780 from Fire Impact Fees. The remaining difference of 106,760 will be borrowed from the capital depletion fund and repaid over FY26 and FY27 spreading the financial impact over that period.

Vehicles #8072 and #8080 will be removed from the fleet and sold at auction with the proceeds being placed in the capital depletion fund to offset some of the purchase price.

STRATEGIC PLAN ALIGNMENT

- Pillar: Community Safety
- Goal: 5.2 - Ensure the ability to meet the service demand as the population grows.

RECOMMENDATION

Staff recommends the City Commission approve the purchase of the two Sutphen Fire Engines and authorize the City Manager or his designee to execute acceptable purchase documents for the two Sutphen Fire Engines through South Florida Emergency Vehicles via their agreement with the governmental purchasing cooperative, Sourcewell, and to take any additional actions necessary to place them into active service.

ATTACHMENTS

- Sutphen Shop Order

PROPOSAL

TO THE:
City of Winter Haven
Winter Haven Fire Department
PO Box 2277
Winter Haven, FL 33887

DATE: March 3, 2025

We hereby propose and agree to furnish the following firefighting equipment upon your acceptance of this Proposal and the Terms and Conditions there in:

Two (2) Sutphen Heavy Duty MONARCH ENGINES-HS 8219 AND HS 8222

Complete and Delivered for the Total Sum of .....$ 2,315,700.00.00

**** Cost based on Sourcewell Contract # 113021- SUT**

NOTE: If the invoice for the trucks is paid in full within 72 hours of its' arriving at South Florida Emergency Vehicles, you may deduct $ 30,000.00 for a payment of $ 2,285,700.00.

The apparatus and equipment being proposed shall be completed within approximately 8-10 months after the Sutphen's receipt and approval of this Proposal subject to delays for all causes beyond our control.

This Proposal shall be valid for 21 days. If a Purchase Agreement or Purchase Order is not received by Sutphen within 21 days of the date of this Proposal, Sutphen reserves the right to extend, withdraw, or modify this Proposal, including pricing, delivery times, and prepayment discounts, as applicable.

Respectfully submitted,

Guy Lombardo
South Florida Emergency Vehicles
Authorized Representative for Sutphen Corporation
573-216-2562

TERMS & CONDITIONS

Changes to National Fire Protection Association ("NFPA") 1900, Environmental Protection Agency ("EPA") or changes legislated by Federal, State or Local Governments *or* changes in parts availability or vendor relationships that impact the cost to manufacture the truck may incur additional charges which shall be borne by the Purchaser. These may include but are not limited to changes that affect the major vendors of the fire apparatus industry such as pump manufacturers, seat manufacturers, electrical power supplies (generators) and powertrain (engine & transmission). Any such changes shall be documented on a change order executed by both Sutphen and Purchaser.

Sutphen shall provide written notice to the Purchaser as soon as it reasonably believes any cost increase provision may be invoked. Sutphen shall provide, upon written request, documentation of such changes and increases.

Sutphen will use its reasonable best efforts to deliver the apparatus within the timeframe quoted herein, provided that such delivery date shall be automatically extended for delays beyond Sutphen's control, including, without limitation, strikes, labor disputes, riots, civil unrest, pandemics, war or other military actions, sabotage, government regulations or controls, fire or other casualty, or inability to obtain materials or services. If such delay occurs, Sutphen shall give notice of delay to Purchaser. Purchaser shall not be entitled to any discount or reduction in price for such delay and Sutphen shall not be liable for any damages (compensatory, incidental, consequential or otherwise) related to such delay.

Final payment shall be made within 72 hours of the unit arriving at the dealership to receive the stated discount, FULL payment must be made at the time of delivery of the completed truck. Any loose equipment, shelving, and graphics will be completed by the dealership. Should payment be delayed, Sutphen reserves the right to charge interest at the rate of one and one-half percent (1.5%) per month, beginning on the day after payment is due.

Transfer of the Manufacturer's Certificate of Origin (MCO) shall take place upon payment in full in accordance with these terms. Sutphen reserves the right to withhold delivery of the MCO until payment in full is received. The apparatus shall be tested per NFPA #1900 at Sutphen's manufacturing facility. Purchaser agrees that the apparatus and equipment being purchased hereunder shall not be driven or used in any manner until it is paid for in full. In the event there are any shortages or omissions with the apparatus at time of completion, Purchaser may withhold a sum equivalent to the price of any such shortages as determined by Sutphen.

In the case of any default in payment hereunder or in the payment on any notes, negotiable paper, obligations or other instruments issued by Purchaser, Sutphen may take full possession of the apparatus and equipment or of the piece or pieces upon which default has been made, and any payments that have been made theretofore shall be applied as rent in full for the use of the apparatus and equipment up to the date of taking possession by Sutphen.

Sutphen warrants to Purchaser that all goods and services furnished hereunder will conform in all respects to the terms of this order, including any applicable change orders, drawings, specifications, or standards incorporated herein, and/or defects in materials, workmanship, and free from such defects in design. In addition, Sutphen warrants that the goods and services are suitable for and will perform in accordance with the purposes for which they were intended, for a period of one year from the Warranty Registration Date, unless an extended warranty is purchased.

The purchase price provided for herein does not include any federal, state or local sales tax, duties, imposts, revenues, excise or other taxes which may hereafter be imposed by governmental authority or otherwise and which are made applicable to the apparatus or equipment covered by this Proposal. In the event that any such taxes are subsequently imposed and become applicable, the purchase price herein shall be increased by the amount of such taxes and such sum shall be immediately paid by Purchaser to Sutphen. To the extent applicable, the prices and deliveries set forth herein are subject to the Defense Production Act.

Sutphen shall provide insurance insuring the apparatus and equipment against loss by fire, theft, or collision and insuring against property damage and personal injury through the completion of the apparatus and transfer of the Manufacturer's Certificate of Origin.

After the execution of this Agreement, Purchaser shall have no right to terminate the Agreement. Sutphen may, in its absolute and sole discretion, accept Purchaser's request to terminate the Agreement. In the event Sutphen accepts Purchaser's request to terminate the Agreement, Sutphen may charge a cancellation fee. The following charge schedule based on costs incurred may be applied, at Sutphen's sole discretion:(a) 10% after order is accepted by Sutphen; (b) 30% of the Purchase Price after production has commenced. The cancellation fee may increase accordingly as costs are incurred as the order progresses through engineering and into manufacturing.

These Terms and Conditions ("T&C") contained in the Proposal provided herein take precedence over all previous negotiations, oral or written, and no representations or warranties are applicable except as specifically contained in these or in any subsequently signed agreement between the Parties. No waiver of any of the provisions of these T&C shall be deemed a waiver of any other provision, whether similar, nor shall any waiver constitute a continuing waiver. If a Purchase Order is issued, this Proposal, including the Terms and Conditions contained herein, shall supersede the terms in the Purchase Order where terms may be inconsistent.

This Proposal shall be governed and controlled as to interpretation, enforcement, validity, construction, effect and in all other respects by the laws, statutes, and decisions of the State of Ohio. Exclusive jurisdiction and venue for any litigation at all related to this in the Franklin County Court of Common Pleas, Columbus, Ohio, and the parties hereto consent and submit to the general jurisdiction of this court. All of these T&C shall be binding upon and inure to the benefit of and be enforceable by Sutphen, Purchaser, their successors and assigns.

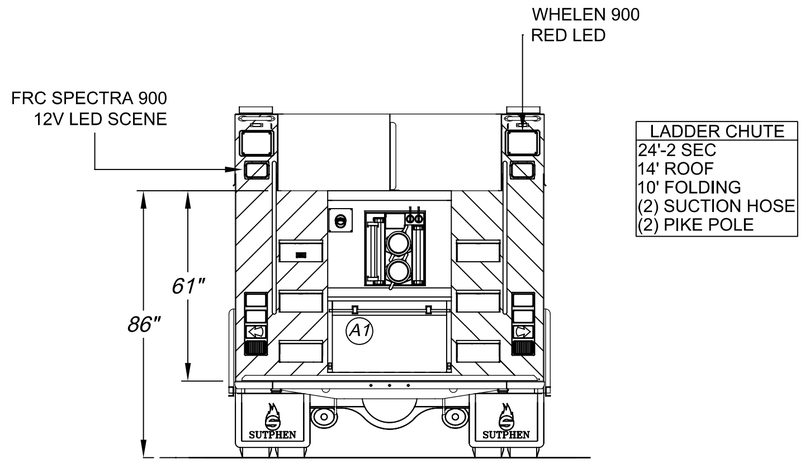

LADDER CHUTE
24'-2 SEC
14' ROOF
10' FOLDING
(2) SUCTION HOSE
(2) PIKE POLE

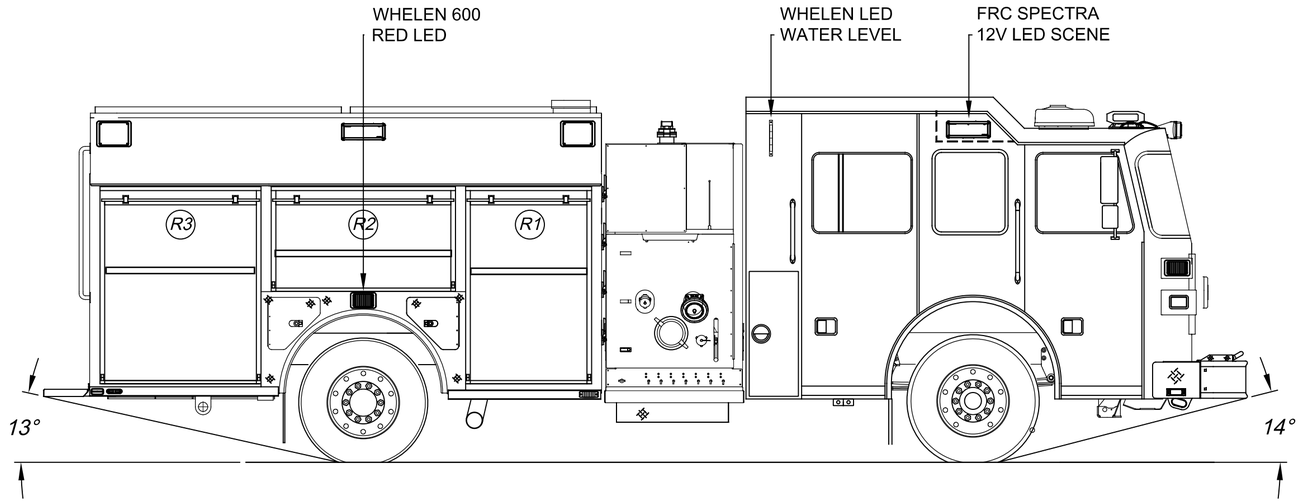

LEFT SIDE COMPARTMENTATION				
COMPT	DOORS	INSIDE DIMENSIONS	DOOR OPENING DIMENSIONS	VOLUME
L1	ROLL-UP	40"W X 66"H X 26"D	37 1/2"W X 56 1/2"H	37.4 CU. FT.
L2	ROLL-UP	59"W X 31 1/2"H X 26"D	56 1/4"W X 27"H	28.4 CU. FT.
L3	ROLL-UP	51 1/2"W X 66"H X 26"D	48 3/4"W X 56 1/2"H	47.4 CU. FT.
L4/L5	LIFT-UP	82"W X 13.5"H X 19"D	75"W X 9.5"H	24 CU. FT.

RIGHT SIDE COMPARTMENTATION				
COMPT	DOORS	INSIDE DIMENSIONS	DOOR OPENING DIMENSIONS	VOLUME
R1	ROLL-UP	40"W X 66"H X 26"D	37 1/2"W X 56 1/2"H	37.4 CU. FT.
R2	ROLL-UP	59"W X 31 1/2"H X 26"D	56 1/4"W X 27"H	28.4 CU. FT.
R3	ROLL-UP	51 1/2"W X 66"H X 26"D	48 3/4"W X 56 1/2"H	47.4 CU. FT.
L4/L5	LIFT-UP	82"W X 13.5"H X 19"D	75"W X 9.5"H	24 CU. FT.

REAR STEP COMPARTMENT				
COMPT	DOORS	INSIDE DIMENSIONS	DOOR OPENING DIMENSIONS	VOLUME
A1	ROLL-UP	39 1/2"W X 28"H X 31"D	36 3/4"W X 19"H	19.8 CU. FT.

BASE STORAGE: 246 CU. FT.
TOTAL STORAGE: 294 CU. FT.

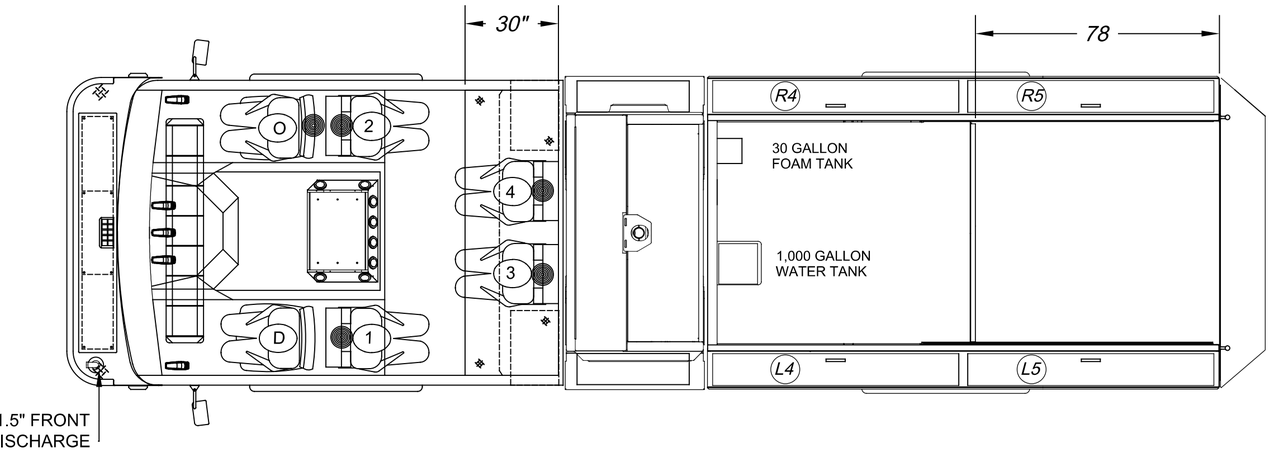

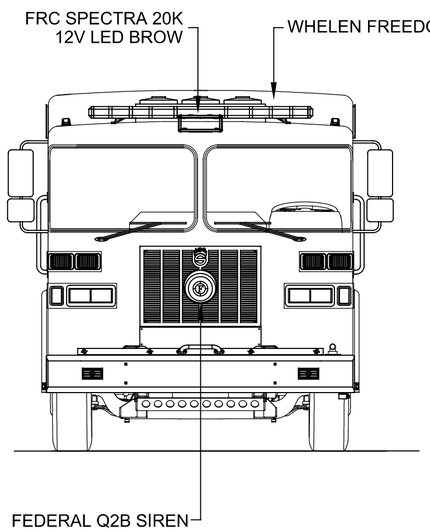

SINGLE TONE
RED

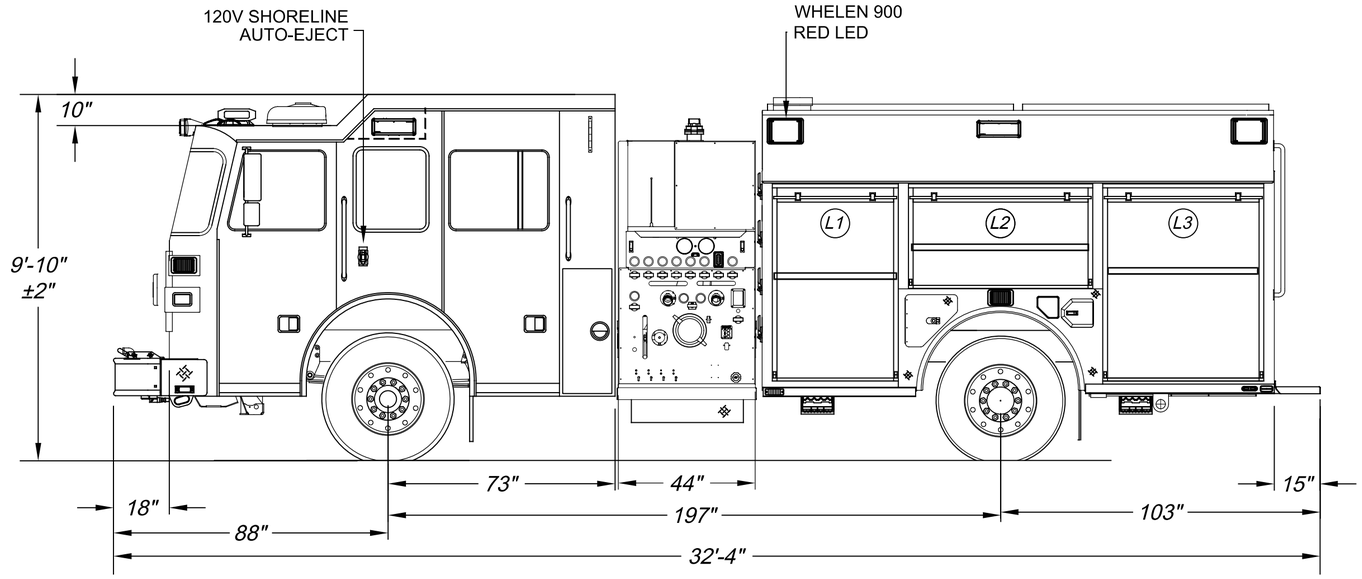

DIMENSIONS SHOWN ON THIS DRAWING ARE APPROXIMATE AND ARE SUBJECT TO MINOR DEVIATIONS DURING CONSTRUCTION.

IN THE EVENT OF A DISCREPANCY BETWEEN THE SUTPHEN SPECIFICATIONS AND DRAWING, THE SUTPHEN SPECIFICATIONS SHALL PREVAIL.

DRAWING IS FOR REFERENCE ONLY. SOME ITEMS PROPOSED MAY NOT BE SHOWN OR NOTED.

CUSTOMER APPROVAL

NAME: _____

TITLE: _____

DATE: _____

REV.	DESCRIPTION	BY	DATE
C	REFERENCE SHOP ORDER REVISION EMAIL	TF	12/05/24
B	REFERENCE SHOP ORDER REVISION EMAIL	TF	11/11/24
A	**REV-A** SHOP ORDER	TF	10/14/24

THIS PRINT IS PROVIDED ON A RESTRICTED BASIS AND IS NOT TO BE USED IN ANY WAY DETRIMENTAL TO THE INTEREST OF SUTPHEN CORPORATION.

DRAWN BY: T.FAHOUM

DATE: 09/17/24

MFG. FACILITY: URBANA STOCK PUMPER

SUTPHEN

STOCK 599

PROGRAM 1 CUSTOM PUMPER

DWG. NO.: HS-8219

Sutphen Component Report Dealership: Sutphen Corporation	HS- 8219 Stock 599 (G9)
	Order#: DO004159 Contact: Richie Miller Position: Sales Operations Manager Phone: 614-923-2453 Mobile: 614-813-8028 Email: richie.miller@sutphencorp.com

Bill To	Ship To
Customer: Sutphen Corporation Contact: Richie Miller, Sales Operations Manager Address: PO Box 158, Amlin, Ohio 43002	Customer: Sutphen Corporation Contact: Richie Miller, Sales Operations Manager Address: 6450 Eiterman Rd., Dublin, Ohio 43016

Comments
Project Manager: Tawfik Fahoum Sales Person: Richie Miller Revision Level: **REV-C** Truck Type: Program Pumper, G9 Body Facility: Urbana

Line	Item #	Qty	Item Description/Comments
1		1	**ENG Facility = Urbana.
2		1	**ENG Truck Series = Program 1.
3		1	**ENG Pump Module Series = Program Module.
4		1	**ENG Electrical System = Point-to-Point.
5	10000225	1	STD WIRING SCHEMATIC (USB)
6	10001200	1	MAXIMUM APPARATUS HEIGHT = N/A
7		1	**ENG Overall Apparatus Height = 9'-10"+/- 2".
8	10001220	1	MAXIMUM APPARATUS LENGTH = N/A
9		1	**ENG Overall Apparatus Length = 32'-4" +/- 2".
			CHASSIS
10	10010001	1	CHASSIS, CUSTOM
11	51010105	1	WHEELBASE = 197”
12		1	**REV-C** **ENG PTA Number = 99.1875".
13		1	**ENG AF Number = 54".
14	25010100	1	FRAME, 10" DOUBLE RAILS, SINGLE AXLE (50K PSI)

Line	Item #	Qty	Item Description/Comments
15	45040100	1	FRONT BUMPER CLIP
16	45010001	1	FRONT TOW EYES, BELOW BUMPER, PAINTED
17		1	**ENG Painted frame color, black.
18	46010000	1	REAR TOW EYES, PAINTED
19		1	**ENG Painted frame color, black.
20	40010250	1	STEERING - ROSS TAS-85
21	22010000	1	DRIVE LINE, SPICER, 1710 SERIES
22	23014130	1	ENGINE, CUMMINS L9 450HP DOC-DPF-DEF-SCR OBD
23	23029100	1	ENGINE WARRANTY, 5 YEAR, 100,000 MILES FOR CUMMINS L9
24	23029300	1	AFTERTREATMENT WARRANTY, 5 YEAR, 100,000 MILES FOR CUMMINS L9
25	23030006	1	AIR INTAKE/EMBER SEPARATOR
26	23031173	1	FUEL FILTER/WATER SEPARATOR, PRIMARY, FLEETGUARD, FS1098
27	23031210	1	FUEL FILTER, SECONDARY, FLEETGUARD, FF63009
28	47012510	1	TRANSMISSION, ALLISON GEN 6, EVS3000 (L9, X10MHD)
29	23110005	1	JACOBS ENGINE BRAKE FOR CUMMINS L ENGINES
30	47024050	1	TRANSMISSION COOLER
31	47030000	1	ALLISON TOUCH PAD SHIFTER
32	47030150	1	SHIFTER PAD GEARING, 5 GEARS OPEN, 6TH GEAR LOCKED
33	21021200	1	COOLING SYSTEM
34	21030195	1	COOLANT FILTER
35	21030000	1	FAN CLUTCH
36	21030200	1	RADIATOR COOLANT RECOVERY, PRESSURIZED SYST
37	26010010	1	FUEL TANK, STAINLESS STEEL, 65 GAL
38	26030000	1	FUEL FILL
39	26030100	1	FUEL COOLER
40	24040000	1	DIESEL EXHAUST FLUID TANK

Line	Item #	Qty	Item Description/Comments
41		1	**ENG DEF Access = Hinged Door for DEF Access.
42	13010225	1	ALTERNATOR, LEECE NEVILLE 420 AMP BLP4003
43	13030100	1	LOW VOLTAGE ALARM, FLOYD BELL TXB-V86-515-QF
44	15010500	1	BATTERIES, INTERSTATE TYPE 31 MHD (4)
45	15031700	1	BATTERY JUMPER TERMINALS
46	15030465	1	120V SHORELINE INLET, KUSSMAUL SUPER 20 AUTO EJECT W/ OLED DISPLAY 091-55-266-XX
47		1	**ENG Shoreline Inlet Location = Driver's side of Cab, standard location.
48		1	**ENG Shoreline Cover Color = Red.
49	15031510	1	BATTERY CHARGER, KUSSMAUL CHIEF 4012
50		1	**ENG Battery Charger Note: Chassis Division to provide/install battery charger & Auto Eject (if applicable)
51	14022120	1	FRONT AXLE, HENDRICKSON STEERTEK NXT 20,000 LB.
52	41022120	1	FRONT SUSPENSION, HENDRICKSON 20,000 LBS. (4) 56" LEAFS
53	41040510	1	STEER ASSIST
54	43010306	1	FRONT TIRES, GOODYEAR 385/65R22.5 LRJ ARMOR MAX PRO 22.5 x 12.25 WHEELS
55	14510530	1	REAR AXLE, MERITOR RS-26-185 27,000 LB.
56	14530100	1	TOP SPEED, 68 MPH
57	42010015	1	REAR SUSPENSION, FIREMAAX 27,000 LBS. AIR RIDE
58	44010308	1	REAR TIRES, GOODYEAR 12R22.5 X 8.25 LRH ENDURANCE RSA HIGHWAY 24,000 - 27,000 GVWR
59	42910300	1	TIRE PRESSURE MONITOR, QUICK PRESSURE
60	44210100	1	WHEELS, ALUM, ACCURIDE (max 27K rear)
61	44270100	1	HUB COVERS, FRONT & REAR, POLISHED STS (Single Axle)
62	44270300	1	CHROME LUG NUT CAPS, FRONT & REAR (Single Axle)
63	44271100	1	MUD FLAPS, FRONT (PAIR)
64	44271200	1	MUD FLAPS, REAR (PAIR)
65	16010285	1	BRAKES STEERTEK DISC PLUS EX225 FRONT, SCAM 8.625" REAR (SINGLE AXLE)
66	18010041	1	AIR BRAKE SYSTEM 4 TANKS WABCO 1200 DRYER (24K, 27K)

Line	Item #	Qty	Item Description/Comments
67	18030010	1	AIR BRAKE RELEASE VALVE, WABCO
68	18020000	1	CENTRAL LOCATION FOR AIR TANK DRAINS
69		1	**ENG Specify Central Location for Air Tank Drain Valves = Under L1 Compartment.
70	18030140	1	AIR INLET CONNECTION W/CHECK VALVE
71		1	**ENG Standard Air Inlet Location = Left hand side of Driver's step well.
72	18035110	1	AIR COMPRESSOR, KUSSMAUL AUTO PUMP AC, 100PSI
73	18036105	1	TIMER, KUSSMAUL AUTO PUMP
74	18210000	1	ELEC STABILITY CONTROL SYST
75	18110050	1	WABCO 4 CHANNEL ANTI-LOCK BRAKES W/ASR (24K, 27K)
76	53510000	1	COMPRESSION FITTINGS ON AIR SYSTEM (CHASSIS)
77	54010000	1	MISCELLANEOUS ITEMS ON CHASSIS
78	54010010	1	DATA, SAFETY & WARNING TAGS APPLICATION, ADHESIVE
			CAB
79	11023250	1	CAB TSAL4E 73" 10" RR 1/2
80	11030025	1	CAB CERTIFICATION - STRUCTURAL INTEGRITY
81	11030950	1	CAB LOCKDOWN LATCHES
82	11031025	1	CAB TILT SYSTEM, AIR CONTROL VALVE
83	11031030	1	CAB TILT CONTROL LOCATION, OFFICER'S SIDE PUMP PANEL
84	11031100	1	MANUAL BACK-UP TILT SYSTEM
85	11031350	1	CAB DOORS, FULL LENGTH (4)
86	11031386	1	CAB STEPS, LOWER & INTERMEDIATE DIAMONDPLATE
87	11031399	1	CAB STEP LIGHTING, TECNIQ E45 LED STRIP LIGHTS
88	11031421	1	CAB DOOR WINDOWS, POWER (4)
89	11031401	1	CAB SIDE WINDOWS, FIXED, BOTH SIDES
90	11031460	1	NO WINDOWS, BACK WALL OF CAB
91	11031465	1	WINDOW TINTING (LIMO TINT 8%) - EACH (4)
92	52010010	1	ELECTRIC INTERMITTENT WIPERS

Line	Item #	Qty	Item Description/Comments
93	52030100	1	DEACTIVATE WINDSHIELD WIPERS WITH PARKING BRAKE ENGAGED
94		1	**ENG Override Switch to Re-Engage Wipers? = Yes.
95	52030200	1	WINDSHIELD WASHER RESERVOIR
96	38010020	1	MIRRORS LANG MEKRA 300 SERIES HEATED & REMOTE
97	11024400	1	UPPER GRILLE, LEVEL STYLE FACADE (L9)
98	11024510	1	FLAMING “S” LOGO, UPPER GRILLE, ILLUMINATED
99		1	**ENG LED backlight color for upper grille = Red
100	11024600	1	LOWER GRILLE, POLISHED STAINLESS (L9)
101	20010080	1	BUMPER, 18" POLISHED STAINLESS STEEL
102		1	**ENG Siren Speaker Perforations = No Speaker Perforations in Bumper.
103	20029800	1	BUMPER SIDES, DIAMONDPLATE
104	20040105	1	STORAGE WELL, DEEP CENTER, FULL WIDTH (18" BUMPER)
105	20030100	1	STORAGE WELL COVER, TREADPLATE, 2" RAISE
106	20030510	1	CUT-OUT IN STORAGE WELL COVER
107		1	**ENG Cut-Out for Treadplate Storage Well Cover = For Driver's side Front Bumper Discharge Hose Connection.
108	20030600	1	BUMPER TROUGH LIGHTING, TECNIQ E44 LED LIGHT STRIP
109	12010400	1	AIR HORNS, DUAL, HADLEY H00978 RECTANGULAR, BEHIND PERFORATION
110		1	**ENG Air Horns Location: Outboard, (1) each side.
111	12030010	1	AIR HORNS CUTOUTS IN BUMPER, BEHIND PERFORATIONS (L9 STYLE)
112	12030350	1	LANYARD CONTROL FOR AIR HORNS
113	12510109	1	ELEC SIREN, WHELEN 295HFSA7, REMOTE FLUSH MOUNT WITH REMOVABLE MIC
114	12620100	1	SIREN SPEAKER, 100W, CAST PRODUCTS, SA4201-6B-A
115	12670110	1	SIREN SPEAKER(S) INSTALLED BEHIND CAB GRILLE
116	12710100	1	SIREN, FEDERAL Q2B, GRILLE MOUNT
117		1	**ENG Q2B Wiring = Wired to Emergency Master then shed with parking brake on.
118	12730305	1	FOOT SWITCH, DRIVER'S SIDE, FOR MECH SIREN

Line	Item #	Qty	Item Description/Comments
119	12730350	1	MOMENTARY SWITCH ON DASH, OFFICER'S SIDE, FOR MECH SIREN
120	12730363	1	SIREN BRAKE SWITCH FOR MECH SIREN, DRIVER'S & OFFICER'S SIDE
121		1	**ENG Siren Brake Switch for Driver in Lower Console Position 2.
122		1	**ENG Siren Brake Switch for Officer in Lower Console Position 5.
123	32520525	1	HEADLIGHTS, LED, FIRETECH FT-4X6, DUAL STS HOUSINGS (TRIPLE UPPER WARNING)
124		1	**ENG Headlight Interior Finish = Chrome.
125	32530500	1	ALTERNATING FLASHER FOR HEADLIGHT
126		1	**ENG Independent Deactivation Switch for Alternating Flasher = Provided.
127	48010305	1	FRONT TURN SIGNALS, WHELEN 400 SERIES LED (4) (LOWER HOUSING)
128	32530750	1	ICC LIGHTS, LED, ROOF MOUNTED MARKERS, GROTE
129	27022120	1	HANDRAILS, CAB EXTERIOR, KNURLED STAINLESS STEEL (4) SIDE
130	27030615	1	COAT HOOKS ON UPPER GRAB HANDRAILS, DRIVER'S SIDE (2)
131	27030655	1	COAT HOOKS ON UPPER GRAB HANDRAILS, OFFICER'S SIDE (2)
132	27025000	1	HANDRAILS, CAB INTERIOR, BLACK RUBBER COATED (2) FRONT ENTRY
133	27030120	1	HANDRAILS, REAR CAB INTERIOR DOOR, BLACK RUBBERIZED (2) AND KNURLED STS AT WINDOW (2)
134	27040100	1	INTERIOR DOOR, NYLON STRAP
135	11032010	1	EXTERIOR COMPT, SIDE OF EXT CAB, 38" H, DS
136	11031930	1	EXTERIOR DOOR, HINGED, PAINTED
137	11032610	1	DRIVER SIDE, LEFT DOOR HINGE (OPEN TOWARDS FRONT OF CAB)
138	11032450	1	COMPT DOOR LOCK - NOT PROVIDED
139	11032110	1	OPENING TO DRIVER'S SIDE CREW SEAT COMPT
140	11032060	1	EXTERIOR COMPT, SIDE OF EXT CAB, 38" H, OS
141	11031930	1	EXTERIOR DOOR, HINGED, PAINTED
142	11032620	1	OFFICER'S SIDE, RIGHT DOOR HINGE (OPEN TOWARDS FRONT OF CAB)
143	11032450	1	COMPT DOOR LOCK - NOT PROVIDED
144	11032120	1	OPENING TO OFFICER'S SIDE CREW SEAT COMPT

Line	Item #	Qty	Item Description/Comments
145	11035420	1	DIAMONDPLATE CAB ROOF 30" x FULL WIDTH
146	31010250	1	INTERIOR, MULTISPEC BLACK SPECKLE PAINT W/BLACK EMBOSSED FRP BOARD
147	11032929	1	DOOR PANEL, FULL STS
148	31010291	1	CAB INTERIOR FLOOR COVERING, BLACK RUBBERIZED
149	22510100	1	ENGINE ENCLOSURE, FULL LENGTH
150	22510530	1	ENGINE ENCLOSURE COVERING, SCORPION BLACK URETHANE BLEND
151	11031680	1	CENTER CONSOLE W/MAP BOOK STORAGE, TOP OF ENGINE ENCLOSURE
152	22610050	1	ENGINE HOOD LIGHT, LED (1)
153	11031510	1	FLAT WORK SURFACE IN LIEU OF GLOVE BOX
154	11031712	1	UPPER CREW DOOR AREA, OPEN
155	29810100	1	CHASSIS ELECTRICAL DESCRIPTION
156	30010130	1	INSTRUMENTATION, AMETEK W/ CENTER & OVERHEAD CONSOLES
			Upper Command Console: 
157		1	**ENG Overhead Console Panel's Finish: Black Wrinkle.
158		1	**ENG Overhead Console Position 1: Switch #1: Master Emergency. Switch #2: Alternating Headlights. Switch #3: Front Scene. Switch #4: Left Scene. Switch #5: Right Scene. Switch #6: Rear Scene.
159		1	**ENG Overhead Console Position 2: -Jensen Stereo.
160		1	**ENG Overhead Console Position 3: -HVAC Controls.
161		1	**ENG Overhead Console Position 4: -Chassis Indicators. -Seat Belt Monitor. -Air Horns Lanyard.
162		1	**ENG Overhead Console Position 5: -Blank.

Line	Item #	Qty	Item Description/Comments
163		1	**ENG Overhead Console Position 6: -Blank.
164		1	**ENG Overhead Console Position 7: -Blank.
165	30010500	1	LOWER COMMAND CONSOLE, L9 & X12
			Lower Command Console (9L & 12L engines): 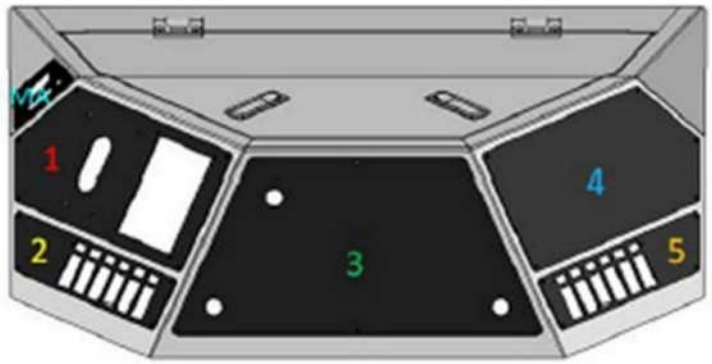
166		1	**ENG Lower Command Console Finish: Black Urethane.
167		1	**ENG Lower Console Panel's Finish: Black Wrinkle.
168		1	**ENG Lower Console Position 1: -Transmission Shift Pad. - Pump shift.
169		1	**ENG Lower Console Position 2: Switch #1: Jake On/Off. Switch #2: Jake Low/Med/High. Switch #3: High Idle. Switch #4: Blank. Switch #5: Siren Brake.
170		1	**ENG Lower Console Position 3: -Parking Brake. -Whelen Siren Head (installed as low as possible). -12V PowerPoints (called out below).
171		1	**ENG Lower Console Position 4: -Blank.
172		1	**ENG Lower Console Position 5: Switch #1: Master Emergency. Switch #2: Blank. Switch #3: Mech Siren. Switch #4: Siren Brake.
173	30010610	1	CAB PUMP SHIFTER, ELECTRIC W/ROUND KNOB (FOR HALE G-SERIES PUMP TRANSMISSION)
174	30011000	1	PUMP INTERLOCK, NOT CONNECTED WITH ODOMETER
175	29930210	1	DELETE MAPBOOK SLOT ON FRONT BREAKER PANEL
176	29910100	1	PROGRAMMABLE LOAD MANAGER, CLASS-1 SUPERNODE II

Line	Item #	Qty	Item Description/Comments
177	30031100	1	HIGH IDLE SWITCH
178	11040000	1	CAB ACCESSORY FUSE PANEL
179	84541540	1	POWER & GROUND STUDS, UPPER COMMAND CONSOLE
180		1	**ENG Requirements (AMPS) for Power/Ground Studs in Upper Command Console: (1) 12-volt 60-amp, direct to the battery ignition off. (1) 12-volt 30-amp switched battery first position on ignition switch. (1) 12-volt 30-amp ignition power second position on ignition switch. (1) 12-volt 125-amp ground.
181	84541545	1	POWER & GROUND STUDS, LOWER COMMAND CONSOLE
182		1	**ENG Requirements (AMPS) for Power/Ground Studs in Lower Command Console: (1) 12-volt 60-amp, direct to the battery. (1) 12-volt 30-amp controlled by the ignition switch. (1) 12-volt 125-amp ground.
183	84541550	1	POWER & GROUND STUDS, UNDER OFFICER'S SEAT
184		1	**ENG Requirements (AMPS) for Power/Ground Studs Under Officers Seat: (1) 12-volt 40-amp controlled by the battery switch. (1) 12-volt 60-amp controlled by the ignition switch. (1) 12-volt 60-amp, direct to the battery. (1) 12-volt 100-amp ground.
185	30110000	1	VEHICLE DATA RECORDER, AKRON/WELDON
186	30031810	2	12V POWER POINT (2)
187		1	**ENG Power Point Location #1: Lower Console Position 3, Driver's corner.
188		1	**ENG Power Point Location #2: Lower Console Position 3, Officer's corner.
189	30031830	2	12V DUAL POWER POINT, USB/USBC, POWERWERX (2)
190		1	**ENG Powerwerx USB/USBC Power Point Location #1: Lower Console Position 3, Driver's corner.
191		1	**ENG Powerwerx USB/USBC Power Point Location #2: Lower Console Position 3, Officer's corner.
192	33510030	1	INTERIOR CAB LIGHTS, WHELEN 6" ROUND RED/CLEAR LED (2)
193	34010030	1	INTERIOR CREW LIGHTS, WHELEN 6" ROUND RED/CLEAR LED (2)
194	28010750	1	DEFROSTER, HEATER & A/C, SEVERE CLIMATE (TM-31)
195	28090003	1	HEAT TO FEET
196	28090100	1	A/C TO FACE
197	28030500	1	DEFROSTER DUCTWORK, ENTIRE WINDSHIELD
198	11031687	1	TOP HEAT/AC STORAGE, TOOL MOUNTING PLATE, 25" x 19.5"

Line	Item #	Qty	Item Description/Comments
199	38510104	1	DRIVER'S SEAT, BOSTROM SIERRA HIGH BACK AIR RIDE ABTS (DURAWEAR PLUS, LOW SEAM)
200	38340110	1	PRIMARY SEAT POSITION
201	38350100	1	SEAT BELT CONFIGURATION, PULL FROM LEFT SHOULDER TO BUCKLE AT RIGHT HIP
202	38320000	1	HELMET STORED IN COMPARTMENT
203	39010118	1	OFFICER'S SEAT, BOSTROM TANKER 450, ABTS SCBA (DURAWEAR PLUS, LOW SEAM)
204	38340110	1	PRIMARY SEAT POSITION
205	38350200	1	SEAT BELT CONFIGURATION, PULL FROM RIGHT SHOULDER TO BUCKLE AT LEFT HIP
206	39030030	1	OFFICER’S SEAT COMPT, FRONT DOOR W/LOCKING LATCH
207	38320000	1	HELMET STORED IN COMPARTMENT
208	39521129	1	CREW SEAT 1, BOSTROM TANKER 450, ABTS SCBA (DURAWEAR PLUS, LOW SEAM)
209	38340110	1	PRIMARY SEAT POSITION
210	38350200	1	SEAT BELT CONFIGURATION, PULL FROM RIGHT SHOULDER TO BUCKLE AT LEFT HIP
211	38320000	1	HELMET STORED IN COMPARTMENT
212	39521130	1	CREW SEAT 2, BOSTROM TANKER 450, ABTS SCBA (DURAWEAR PLUS, LOW SEAM)
213	38340110	1	PRIMARY SEAT POSITION
214	38350100	1	SEAT BELT CONFIGURATION, PULL FROM LEFT SHOULDER TO BUCKLE AT RIGHT HIP
215	38320000	1	HELMET STORED IN COMPARTMENT
216	39521430	1	CREW SEAT 3, BOSTROM TANKER 400CT, ABTS SCBA FLIP UP (DURAWEAR PLUS, LOW SEAM)
217	38340120	1	SECONDARY SEAT POSITION
218	38350100	1	SEAT BELT CONFIGURATION, PULL FROM LEFT SHOULDER TO BUCKLE AT RIGHT HIP
219	38320000	1	HELMET STORED IN COMPARTMENT
220	39521431	1	CREW SEAT 4, BOSTROM TANKER 400CT, ABTS SCBA FLIP UP (DURAWEAR PLUS, LOW SEAM)
221	38340120	1	SECONDARY SEAT POSITION
222	38350200	1	SEAT BELT CONFIGURATION, PULL FROM RIGHT SHOULDER TO BUCKLE AT LEFT HIP
223	38320000	1	HELMET STORED IN COMPARTMENT
224	39550200	1	SEAT COLOR, BLACK

Line	Item #	Qty	Item Description/Comments
225	39610115	5	SCBA BRACKETS, IMMI SMART DOCK (5)
226	38410000	1	SEAT BELT WARNING SYSTEM, AKRON / WELDON
227	39710015	1	FULL WIDTH CREW SEAT COMPT, FRONT DROP-DOWN DOORS (73" CAB)
228	11031745	1	OVERHEAD STORAGE, FRONT OF 10" RR W/DOORS
229	30080150	1	HD STEREO, JENSEN, AM/FM/WB/BT
230	84561010	1	CAMERA SYSTEM, FRC, INVIEW TRUEVIEW, SINGLE CAMERA (WIRED)
231		1	**ENG Camera Mounting Location: Rear of Body.
232		1	**ENG Camera Monitor Mounting Location: Below Overhead Command Console Position 3.
			PUMP & PLUMBING
233	60080003	1	PUMP, HALE QMAX-1500 GPM SINGLE STAGE
234	60025000	1	GEARBOX, HALE, G-SERIES, REAR MOUNTED
235	60025950	1	PUMP GEARBOX YOKE, 1710
236	60026000	1	PUMP PACKING, HALE
237	60031005	1	ALLOY ANODES, HALE (2)
238	60035123	1	PUMP TEST, THIRD PARTY TESTING
239	61510000	1	AUXILIARY COOLER (HEAT EXCHANGER)
240	62010002	1	STAINLESS STEEL PIPING
241	66090010	1	3" TANK-TO-PUMP W/CHECK VALVE
242	61729120	1	VALVE, AKRON, HEAVY DUTY
243	61770900	1	ACTUATOR, VALVE, PUSH/PULL, CLASS 1
244	73090001	1	TANK FILL 2"
245	61729120	1	VALVE, AKRON, HEAVY DUTY
246	61770900	1	ACTUATOR, VALVE, PUSH/PULL, CLASS 1
247	61090003	1	PRESSURE GOVERNOR, CLASS 1 TPGJ1939
248	61290020	1	INTAKE PRESSURE CONTROL, TFT A1860
249	63021500	1	6" MAIN SUCTION, LEFT SIDE
250	65090000	1	2.5" LEFT SIDE INLET

Line	Item #	Qty	Item Description/Comments
251	61729120	1	VALVE, AKRON, HEAVY DUTY
252	61770905	1	ACTUATOR, VALVE, SWING CONTROL
253	60036010	1	THREADS, NST
254	63025500	1	6" MAIN SUCTION, RIGHT SIDE
255	64090000	1	2.5" RIGHT SIDE INLET
256	61729120	1	VALVE, AKRON, HEAVY DUTY
257	61770905	1	ACTUATOR, VALVE, SWING CONTROL
258	60036010	1	THREADS, NST
259	65540500	1	SUCTION EXTENSION FOR FUTURE WITH BLANK OFF PLATE, OFFICER'S SIDE
260		1	**ENG Air horns will remain outboard, this option is just called out to be captured on the pump side so the port is available incase a customer wants this.
261	70525900	1	2.5" DISCHARGE, LEFT - POSITION 1
262	61729120	1	VALVE, AKRON, HEAVY DUTY
263	61770915	1	ACTUATOR, VALVE, PUSH/PULL, CLASS 1 W/ RACK & SECTOR
264	77090000	1	GAUGE, DISCH, CLASS 1 2.5"
265	61810150	1	DISCHARGE TERMINATION, 30 DEGREE ELBOW
266	60036010	1	THREADS, NST
267	70525900	1	2.5" DISCHARGE, LEFT - POSITION 2
268	61729120	1	VALVE, AKRON, HEAVY DUTY
269	61770915	1	ACTUATOR, VALVE, PUSH/PULL, CLASS 1 W/ RACK & SECTOR
270	77090000	1	GAUGE, DISCH, CLASS 1 2.5"
271	61810150	1	DISCHARGE TERMINATION, 30 DEGREE ELBOW
272	60036010	1	THREADS, NST
273	71025905	1	3" DISCHARGE, RIGHT - POSITION 3
274	61729160	1	VALVE, AKRON, SLOW CLOSE
275	61770900	1	ACTUATOR, VALVE, PUSH/PULL, CLASS 1
276	77090000	1	GAUGE, DISCH, CLASS 1 2.5"

Line	Item #	Qty	Item Description/Comments
277	61810160	1	DISCHARGE TERMINATION, STRAIGHT
278	60036010	1	THREADS, NST
279	71025900	1	2.5" DISCHARGE, RIGHT - POSITION 4
280	61729120	1	VALVE, AKRON, HEAVY DUTY
281	61770900	1	ACTUATOR, VALVE, PUSH/PULL, CLASS 1
282	77090000	1	GAUGE, DISCH, CLASS 1 2.5"
283	61810160	1	DISCHARGE TERMINATION, STRAIGHT
284	60036010	1	THREADS, NST
285	61888888	1	SPECIAL ADAPTER FOR DISCHARGE #4 2.5" NST (F) X 2.5"NST (M) 30 DEGREE DOWN
286	71590000	1	DISCHARGE, 2.5" LEFT REAR
287	61729120	1	VALVE, AKRON, HEAVY DUTY
288	61770900	1	ACTUATOR, VALVE, PUSH/PULL, CLASS 1
289	77090000	1	GAUGE, DISCH, CLASS 1 2.5"
290	61810150	1	DISCHARGE TERMINATION, 30 DEGREE ELBOW
291	60036010	1	THREADS, NST
292	72290000	1	1.5" FRONT BUMPER DISCHARGE, 2" PLUMBING
293	61729120	1	VALVE, AKRON, HEAVY DUTY
294	61770900	1	ACTUATOR, VALVE, PUSH/PULL, CLASS 1
295	77090000	1	GAUGE, DISCH, CLASS 1 2.5"
296	60036010	1	THREADS, NST
297		1	**ENG Front Bumper Swivel Location/Side = Driver's side.
298		1	**ENG Front Discharge Swivel Location/Trough = Top of Bumper.
299	72590002	1	DECK GUN DISCHARGE 3"
300	61729160	1	VALVE, AKRON, SLOW CLOSE
301	61770900	1	ACTUATOR, VALVE, PUSH/PULL, CLASS 1
302	77090000	1	GAUGE, DISCH, CLASS 1 2.5"

Line	Item #	Qty	Item Description/Comments
303	72570100	1	DECK GUN TERMINATION, THREADED
304		1	**ENG Make/Model of Dealer or Customer Supplied Deck Gun Monitor = N/A.
305	72570200	1	EXTEND-A-GUN, TASK FORCE TIPS XG18, MANUAL
306	72890000	1	CROSSLAYS, TWO 2" W/1.5" SWIVEL
307		1	**ENG Crosslay Hose Load Requirement = 200’ of 1.75” Hose Each.
308	61729120	2	VALVE, AKRON, HEAVY DUTY (2)
309	61770900	2	ACTUATOR, VALVE, PUSH/PULL, CLASS 1 (2)
310	77090000	2	GAUGE, DISCH, CLASS 1 2.5" (2)
311	60036010	2	THREADS, NST (2)
312	72910505	1	COVER, ALUM W/VINYL SIDES FOR CROSSLAYS
313		1	**ENG Crosslay/Speedlay Side Covers Color = Black.
314	72932201	1	COVER FASTENERS, BUNGIE CORDS WITH RED TAB
315		1	**ENG Specify details for side covers: Number of flaps, fasteners & and how they terminate (manufacturer’s discretion or customer specified?) = OEM Discretion.
316	61742000	1	MASTER PUMP DRAIN, MULTIPORT
317	61790510	10	DRAIN VALVES, HALE, LIFT-UP (10)
			PUMP PANEL
318	74914110	1	PRG SM1 - SIDE MOUNT PUMP PANEL (CROSSLAYS)
319	74928100	1	PUMP MODULE LENGTH, 44"
320	74929110	1	HALE PUMP MODULE CONFIGURATION, SIDE MOUNT
321	74930710	1	PANEL FINISH, BRUSHED STS 14 GAUGE (PRG)
322		1	**ENG Pump Panel Label Verbiage Standard = Yes.
323	74931055	1	COLOR CODING (PRG)
324		1	**ENG Color Coding Standard = Yes.
325	74931250	1	DISCHARGE GAUGE BEZELS, CHROME (PRG)
326	74931290	1	PUMP MODULE FRAMEWORK, SWIRL FINISH
327	74931390	1	PUMP FINISH, PAINTED BY PUMP MFG
328	74931590	1	PLUMBING FINISH, NON-PAINTED

Line	Item #	Qty	Item Description/Comments
329		1	**ENG Non-Painted Plumbing = Stainless steel welds shall be treated/coated.
330	74931690	1	EXTERIOR DUNNAGE AREA PANEL, BRUSHED STS
331	75040215	1	TROUGH IN RUNNING BOARD, BOTH SIDES
332		1	**ENG Running Board Trough Cover = Velcro Straps.
333	75590010	1	PUMP OPERATOR LIGHTS, LED (PRG)
334	75590110	1	PUMP PANEL LIGHTS OFFICER'S SIDE, LED (PRG)
335	76088888	1	SPECIAL ITEM, REMOTE MOUNT PRIMER
336		1	**ENG Remote mount primer in pump module in case future customer of demo unit wants front suction.
337	76090002	1	PUMP PANEL GAUGES & CONTROLS (PRG)
338	60090030	1	PUMP PRIMER, TRIDENT, AIR
339	60028310	1	(1) PRIMER BUTTON - MAIN SUCTION
340	76025110	1	COMPRESSION FITTINGS ON AIR SYSTEM (PRG PUMP MODULE)
341	76031970	1	AIR OUTLET, DRIVER'S SIDE PUMP PANEL
342	76030900	1	HALE TRV-L THERMAL RELIEF VALVE WITH LIGHT AT PUMP PANEL
343	76031900	1	AIR HORN PUSH BUTTON SWITCH ON PUMP PANEL
344	76590000	1	GAUGES, MASTER, CLASS 1 4.5" (PRG)
345	77590001	1	GAUGE, WATER LEVEL, CLASS 1, INTELLI-TANK ITL-40
346		1	**ENG Water Level Gauge Color = Multi Color.
347	77590040	1	GAUGE, FOAM LEVEL, CLASS 1, INTELLI-TANK ITL-4
348		1	**ENG Class of Foam for Foam Gauge = Class A.
			WATER TANK
349	83525200	1	WATER TANK BRAND, UPF
350	73531425	1	FOAM TANK 30 GALLON BUILT INTO BOOSTER TANK
351	83590005	1	WATER TANK, 1000 GAL, POLY
			BODY
352	80089500	1	BODY SUBFRAME, PROGRAM PUMPER
353	80189590	1	BODY G9 - ALUM 40/51 LADDERS THRU TANK

Line	Item #	Qty	Item Description/Comments
354	80245012	1	UPPER HATCH COMPARTMENT, LEFT & RIGHT SIDES
			BODY COMPARTMENTS
			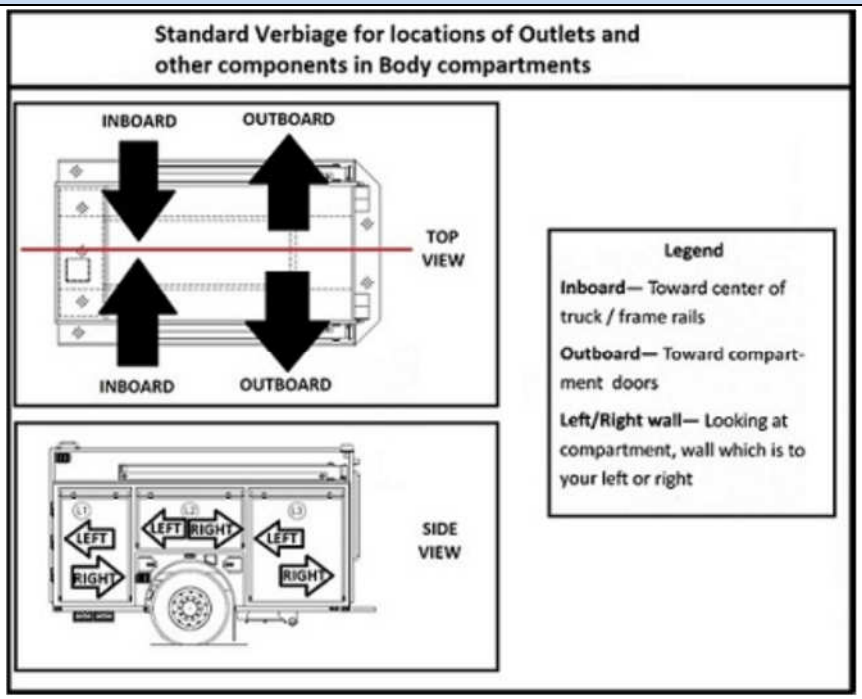
355	81130200	1	**REV-B** ADJUSTABLE SHELF [L1] (1)
356	80250100	2	**REV-B** TURTLE TILE ON COMPT FLOOR, SHELF, TRAY OR DRAWER [L1] (2)
357	81130200	1	**REV-B** ADJUSTABLE SHELF [L2] (1)
358	80250100	2	**REV-B** TURTLE TILE ON COMPT FLOOR, SHELF, TRAY OR DRAWER [L2] (2)
359	81130200	1	**REV-B** ADJUSTABLE SHELF [L3] (1)
360	80250100	2	**REV-B** TURTLE TILE ON COMPT FLOOR, SHELF, TRAY OR DRAWER [L3] (2)
361	81130200	1	**REV-B** ADJUSTABLE SHELF [R1] (1)
362	80250100	2	**REV-B** TURTLE TILE ON COMPT FLOOR, SHELF, TRAY OR DRAWER [R1] (2)
363	81130200	1	**REV-B** ADJUSTABLE SHELF [R2] (1)
364	80250100	2	**REV-B** TURTLE TILE ON COMPT FLOOR, SHELF, TRAY OR DRAWER [R2] (2)
365	81130200	1	**REV-B** ADJUSTABLE SHELF [R3] (1)
366	80250100	2	**REV-B** TURTLE TILE ON COMPT FLOOR, SHELF, TRAY OR DRAWER [R3] (2)
367	80250100	1	**REV-B** TURTLE TILE ON COMPT FLOOR, SHELF, TRAY OR DRAWER [A1] (1)

Line	Item #	Qty	Item Description/Comments
368		1	**REV-B** **ENG Turtle Tile Color = Black.
369	81165705	1	UNISTRUT TRACK IN COMPTS
370	80290012	1	COMPT DOORS, ROM ROLL-UP, PAINTED
371		1	**ENG Painted job color, red.
372	80230600	1	DOOR SILL PROTECTION, BODY COMPTS, PROTEC, CLEAR FILM
373	80225000	1	REAR COMPT DOOR (A1) ROM ROLL-UP, SATIN FINISH
374	80230650	1	DOOR SILL PROTECTION, REAR COMPT, NOT FACTORY PROVIDED
375	80230003	7	ROLL-UP DOOR DRIP PAN/GUARD (WITH DRAIN) (7)
376		1	**ENG Doors to have splash guards w/drains = All Body Roll-up Doors.
377	80230300	1	COMPT INTERIOR FINISH, SMOOTH
378	84531215	1	COMPT LIGHTING, TECNIQ LED E44 LIGHT STRIPS, 2 PER COMPT
			BODY EXTERIOR
379	81380000	1	HOSEBED W/REMOVABLE ALUMINUM FLOORING
380		1	**ENG List the Hose Bed Hose Load Req. = N/A
381	81330100	1	STANDARD HOSEBED HEIGHT
382	81410000	1	COVER, VINYL, MAIN HOSE BED
383		1	**ENG Hosebed Cover Color = Black.
384	81440230	1	COVER FASTENERS, METAL AIRPLANE LATCHES
385		1	**ENG Specify number of rear flaps, fasteners & and how they terminate (manufacturer's discretion or customer specified?) = Mfgr's Discretion.
386	81330300	1	HOSE BED DIVIDER, ADJ (1)
387	81331115	1	REMOVABLE SUPPORT BAR FOR REAR HOSEBED COVER
388	81332115	1	HOSEBED LIGHTING, SIDES, TECNIQ E44 LED LIGHT STRIPS
389	81910100	1	HANDRAILS, KNURLED STS
390	82290010	1	STEPS, FRONT BODY, IC FOLD DOWN W/LIGHT
391		1	**ENG Step Light Color = White.
392	82390001	1	STEPS, REAR BODY (14x11 & 14x8)
393	82510000	1	RUB RAILS, ANODIZED ALUM

Line	Item #	Qty	Item Description/Comments
394	83010050	1	ALUMINUM TREADPLATE (PUMPER/TANKER)
395	83030350	1	REAR STEP/TAILBOARD CORNERS, 45 DEGREE (PRG)
396	80290052	1	10 SCBA CYLINDER COMPTS (3 TRIPLE-FMI, 1 SINGLE-SIG4)
397		1	**ENG A triple bottle compartment cannot be located on the driver's side behind rear axle.
398	80290220	1	DIVIDER FOR (2) TRIPLE SCBA COMPARTMENTS
399		1	**ENG Location of Dividers for Triple SCBA Compartments = Forward of Rear Axle.
400	80290310	1	DOOR FINISH, BRUSHED STAINLESS, SINGLE/DOUBLE SCBA COMPT (1)
401	80290410	3	DOOR FINISH, DIAMONDPLATE, TRIPLE SCBA COMPT (3)
402	88520100	1	SUCTION HOSE, (2) 10' SECT 6" KOCHEK LIGHTWEIGHT
403		1	**ENG Suction Hose Location = Ladder Chute.
404	88540350	1	SUCTION HOSE MOUNTED IN LADDER CHUTE
405	88550300	1	STRAINER NOT PROVIDED
406	83030705	1	REAR FENDERS, ALUMINUM TREADPLATE
407	89011500	1	ALCO-LITE PEL-24 24'2 SEC & PRL-14 14' ROOF & 10' FOLDING
408	89590007	1	LADDER CHUTE W/SUCTION HOSE STORAGE & PIKE POLE STORAGE
409	89520210	1	LADDER ENCLOSURE, DIAMONDPLATE DOOR
			ELECTRICAL
410	84550110	1	LICENSE PLATE BRACKET W/ LIGHT, LED
411	84511100	1	BODY ELECTRICAL DESCRIPTION
412	84520000	1	BACK UP ALARM, ECCO SA917
413	85010302	1	TAILLIGHTS, WHELEN 600 SERIES, LED STOP/TAIL/TURN/REVERSE, QUAD HOUSING (PAIR)
414		1	**ENG Tail Light Housing Color = Chrome.
415	85110100	1	ICC LIGHTS, LED
416	85510200	1	STEP LIGHTS, LED, REAR BODY & WHELEN 2G AT PUMP PANEL
417	85710036	1	UNDERCARRIAGE GROUND LIGHTS, TECNIQ T44 LED
418	86528999	1	DELETE REAR WORK LIGHTS
419	86600000	1	OPTICAL WARNING SYSTEM, UPPER (PUMPER)

Line	Item #	Qty	Item Description/Comments
			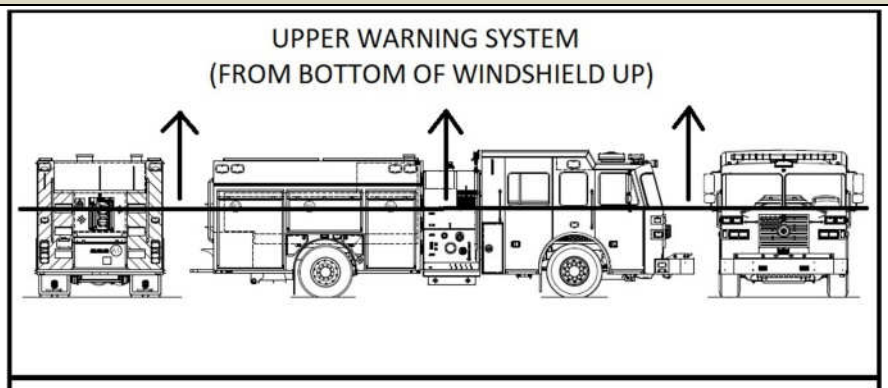 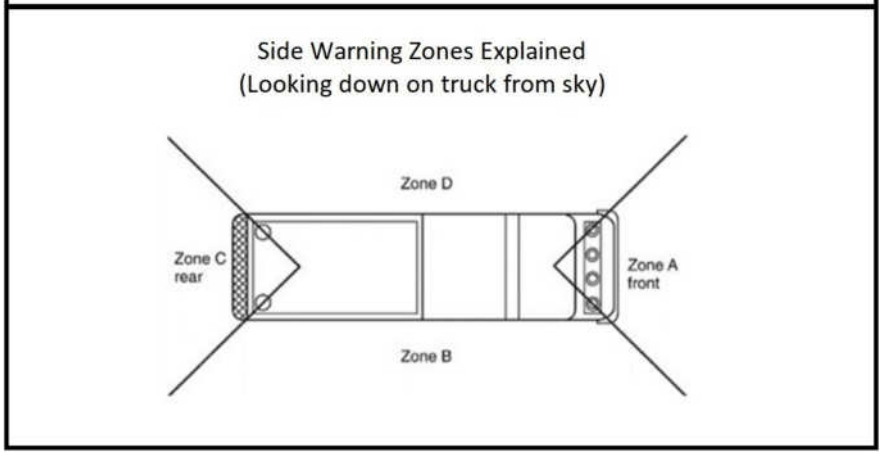
420	**86610120**	**1**	**UPPER WARNING LIGHTS, ZONE A (FRONT), WHELEN FREEDOM IV 72" LED LIGHT BAR, F4N7QLED, 12 MODULES**
			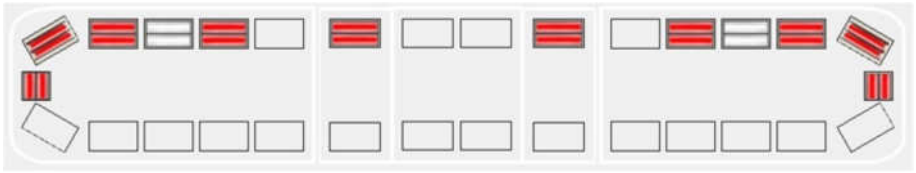
421	**86920100**	**1**	**UPPER ZONE A LIGHTBAR, STANDARD CONFIGURATION**
422		**1**	****ENG Zone A, Upper Lightbar Standard Configuration = Single light bar: (2) end red LED modules, (2) corner red LED modules, (6) forward-facing red LED modules and (2) forward-facing white LED modules. All clear outer lenses. Installed on the cab roof as far forward as possible with two (2) MK8H 5in. cast aluminum risers.**
423	**86699998**	**1**	**UPPER WARNING LIGHTS, ZONE B (OFFICER'S SIDE), COVERED BY ZONES A & C (Surface Mount)**
424	**86710300**	**1**	**UPPER WARNING LIGHTS, ZONE C (REAR), WHELEN LED, 900 SERIES SURFACE MOUNT, 90**5F*R (QTY 4)**
425		**1**	****ENG Red LED/Red Lenses/Chrome Flanges.**
426	**86899998**	**1**	**UPPER WARNING LIGHTS, ZONE D (DRIVER'S SIDE), COVERED BY ZONES A & C (Surface Mount)**
427	**87100000**	**1**	**OPTICAL WARNING SYSTEM, LOWER (PUMPER)**

Line	Item #	Qty	Item Description/Comments
			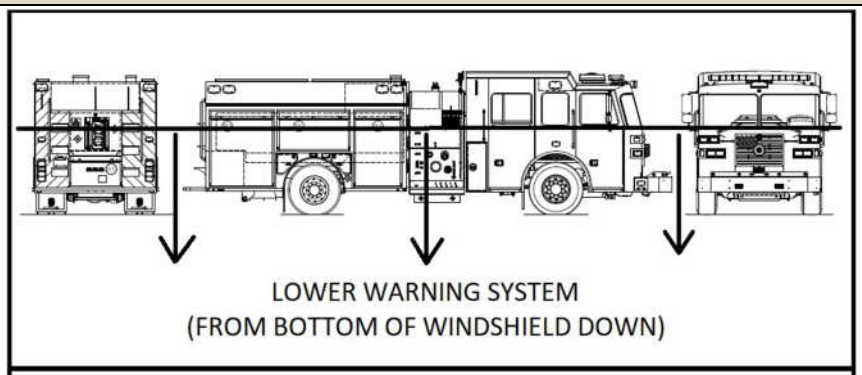 LOWER WARNING SYSTEM (FROM BOTTOM OF WINDSHIELD DOWN) 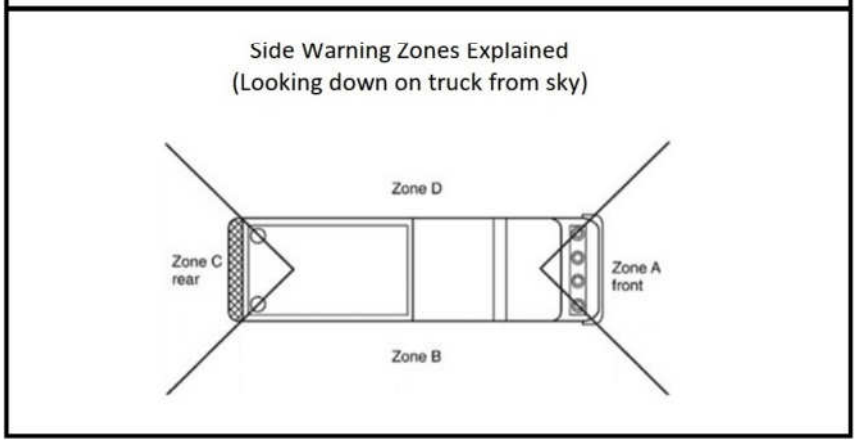 Side Warning Zones Explained (Looking down on truck from sky) Zone D Zone C rear Zone A front Zone B
428	**87110110**	**1**	**LOWER WARNING LIGHTS, ZONE A (FRONT), WHELEN 600 SUPER LED, 60*02F*R (QTY 4)**
429		**1**	****ENG Zone A, Lower Warning Light Color, Lens Color, Details = Red LED/Red Lenses/Chrome Flanges.**
430	**87811130**	**1**	**LOWER, ZONE A - MOUNTING LOCATION (DUAL HOUSINGS)**
431		**1**	****ENG Zone A, Lower - Front, Mounting Location = (2) Warnings in top headlight housing, each side.**
432	**87210100**	**1**	**LOWER WARNING LIGHTS, ZONE B (OFFICER'S SIDE), WHELEN 600 SUPER LED, 60*02F*R (QTY 2), ION T-SERIES LED, TLI* (QTY 1)**
433		**1**	****ENG Zone B, Lower Officer's Side Warning Light Color, Lens Color, Details = Red LED/Red Lenses/Chrome Flanges.**
434	**87812110**	**1**	**LOWER, ZONE B - MOUNTING LOCATION (PUMPERS, TANKERS, RESCUES)**
435		**1**	****ENG Zone B, Lower - Officer's Side, Mounting Location = -(1) Warning Light near the front corner of the Apparatus. -(1) Warning Light near the rear Axle. -(1) Warning Light near the rear corner of the Apparatus. -Reference Shop Order Drawing for lights and placement.**
436	**87310100**	**1**	**LOWER WARNING LIGHTS, ZONE C (REAR), WHELEN 600 SUPER LED, 60*02F*R (QTY 2)**
437		**1**	****ENG Zone C, Lower Rear Warning Light Color, Lens Color, Details = Red LED/Red Lenses.**
438	**87410100**	**1**	**LOWER WARNING LIGHTS, ZONE D (DRIVER'S SIDE), WHELEN 600 SUPER LED, 60*02F*R (QTY 2), ION T-SERIES TLI* (QTY 1)**
439		**1**	****ENG Zone D, Lower Driver's Side Warning Light Color, Lens Color, Details = Red LED/Red Lenses/Chrome Flanges.**

Line	Item #	Qty	Item Description/Comments
440	87814110	1	LOWER, ZONE D - MOUNTING LOCATION (PUMPERS, TANKERS, RESCUES)
441		1	**ENG Zone D, Lower - Driver's Side, Mounting Location = -(1) Warning Light near the front corner of the Apparatus. -(1) Warning Light near the rear Axle. -(1) Warning Light near the rear corner of the Apparatus. -Reference Shop Order Drawing for lights and placement.
442	87537742	1	ADDITIONAL WARNING LIGHTS, WHELEN 900 SERIES LED, 90**5F*R (PAIR) (1)
443		1	**CLAR NOTES, -Red LED/Red Lenses/Chrome Flanges. -(1) Each side of body, front corners, high.
444	88390902	1	SCENE LIGHT, FRC SPECTRA 20K, 12V LED, BROW (1)
445		1	**ENG Scene Light Details = -White Housing, Chrome Bezel, Switched in Cab, Overhead Console Position 1, "Front Scene".
446	88390912	4	SCENE LIGHT, FRC SPECTRA 20K, 12V LED, SURFACE MOUNT (4)
447		1	**CLAR NOTES, -(1) light each side of Cab above middle Cab windows. Chrome Bezels. Switched in Cab, Overhead Console Position 1, "Left Scene", "Right Scene". -(1) light each side of Body above L2/R2 compartments. Chrome Bezels. Switched in Cab, Overhead Console Position 1, "Left Scene", "Right Scene".
448	88390950	2	SCENE LIGHT, FRC SPECTRA 900, 12V LED, SURFACE MOUNT (2)
449		1	**ENG Scene Light Details = -Rear of Body, under Whelen 900 Warning lights. Chrome Bezels. Switched in Cab, Overhead Console Position 1, "Rear Scene". Wired to Reverse.
			PAINT & FINISH
450	89910010	1	CORROSION REDUCTION PROGRAM (PROPOSALS)
451	90010020	1	PAINT SCHEME
452	90030004	1	PAINT, SINGLE TONE
453		1	**ENG Single Tone Paint Color = Red.
454	90030154	1	PAINT FRAME RAILS & BODY REAR DROP - BLACK
455	90030190	1	TEXTURED FRAME RAIL COATING, PLUMBING AREA
456	90030015	1	A/C CONDENSER PAINTED ROOF COLOR
457		1	**ENG Note Paint AC Condenser Color = Red.
458	90680120	1	CHEVRON STRIPING, REAR BODY OUTBOARD, REFLEXITE
459		1	**ENG Chevron Striping, Rear Body Color = #030 Red Transparent & #L2 Fluorescent Lime.
			EQUIPMENT
460	91010000	1	MISC EQUIP - (1) PINT TOUCH-UP PAINT, STAINLESS STEEL NUTS & BOLTS

Line	Item #	Qty	Item Description/Comments
461	91030700	1	ZIAMATIC SAC-44 FOLDING WHEEL CHOCKS (PAIR) MTD W/ SQCH-44H HOLDERS
462		1	**ENG Wheel Chock Mounting Locations = (1) Under L1 Compartment and (1) Under L3 Compartment.
COMPLETION & WARRANTY			
463	99010100	1	MANUALS, ELECTRONIC VERSION (2-USB)
464	99031105	1	PICK-UP UNIT AT FACTORY
465	99520110	1	WARRANTY, ONE YEAR
466	99521100	1	WARRANTY, FRAME, LIFETIME
467	99521200	1	WARRANTY, CAB STRUCTURAL, 10 YR.
468	99521300	1	WARRANTY, BODY STRUCTURAL, 10 YR.
469	99521400	1	WARRANTY, PAINT, 10 YR.
470	99521900	1	WARRANTIES, MAJOR VENDOR COMPONENTS

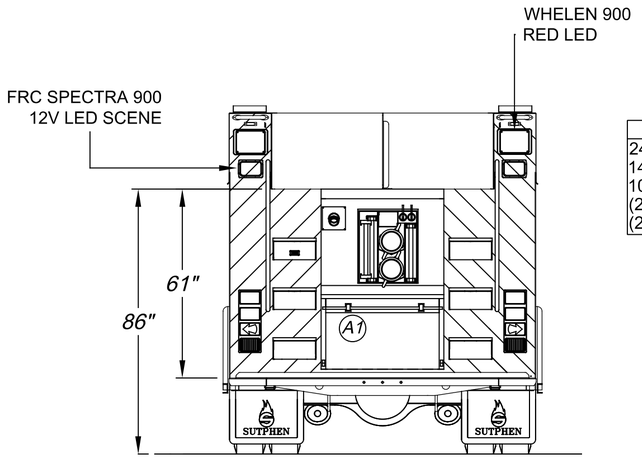

LADDER CHUTE
24'-2 SEC
14' ROOF
10' FOLDING
(2) SUCTION HOSE
(2) PIKE POLE

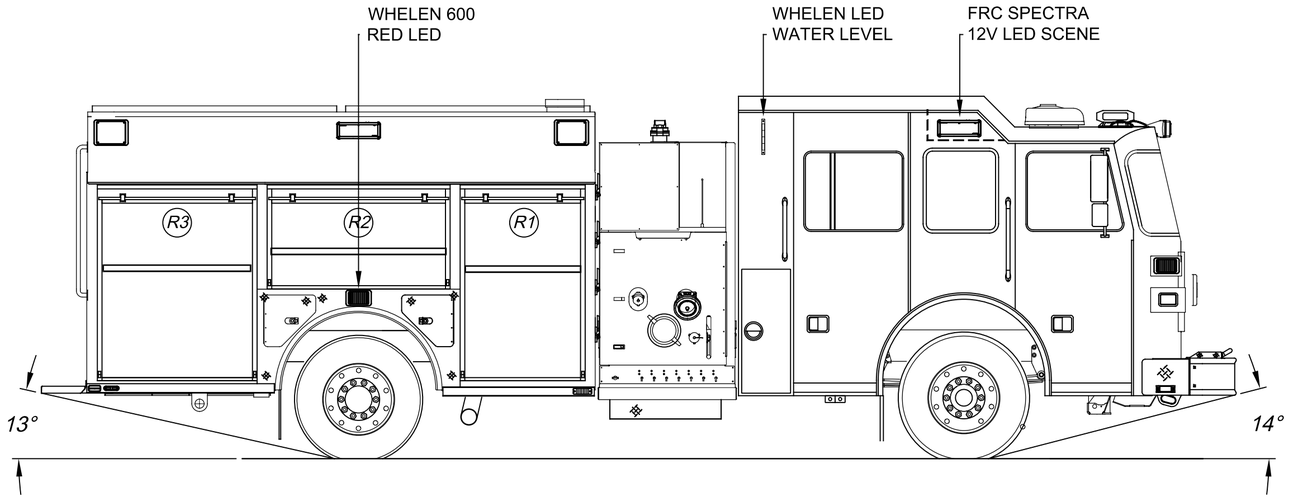

LEFT SIDE COMPARTMENTATION				
COMPT	DOORS	INSIDE DIMENSIONS	DOOR OPENING DIMENSIONS	VOLUME
L1	ROLL-UP	40"W X 66"H X 26"D	37 1/2"W X 56 1/2"H	37.4 CU. FT.
L2	ROLL-UP	59"W X 31 1/2"H X 26"D	56 1/4"W X 27"H	28.4 CU. FT.
L3	ROLL-UP	51 1/2"W X 66"H X 26"D	48 3/4"W X 56 1/2"H	47.4 CU. FT.
L4/L5	LIFT-UP	82"W X 13.5"H X 19"D	75"W X 9.5"H	24 CU. FT.

RIGHT SIDE COMPARTMENTATION				
COMPT	DOORS	INSIDE DIMENSIONS	DOOR OPENING DIMENSIONS	VOLUME
R1	ROLL-UP	40"W X 66"H X 26"D	37 1/2"W X 56 1/2"H	37.4 CU. FT.
R2	ROLL-UP	59"W X 31 1/2"H X 26"D	56 1/4"W X 27"H	28.4 CU. FT.
R3	ROLL-UP	51 1/2"W X 66"H X 26"D	48 3/4"W X 56 1/2"H	47.4 CU. FT.
L4/L5	LIFT-UP	82"W X 13.5"H X 19"D	75"W X 9.5"H	24 CU. FT.

REAR STEP COMPARTMENT				
COMPT	DOORS	INSIDE DIMENSIONS	DOOR OPENING DIMENSIONS	VOLUME
A1	ROLL-UP	39 1/2"W X 28"H X 31"D	36 3/4"W X 19"H	19.8 CU. FT.

BASE STORAGE: 246 CU. FT.
TOTAL STORAGE: 294 CU. FT.

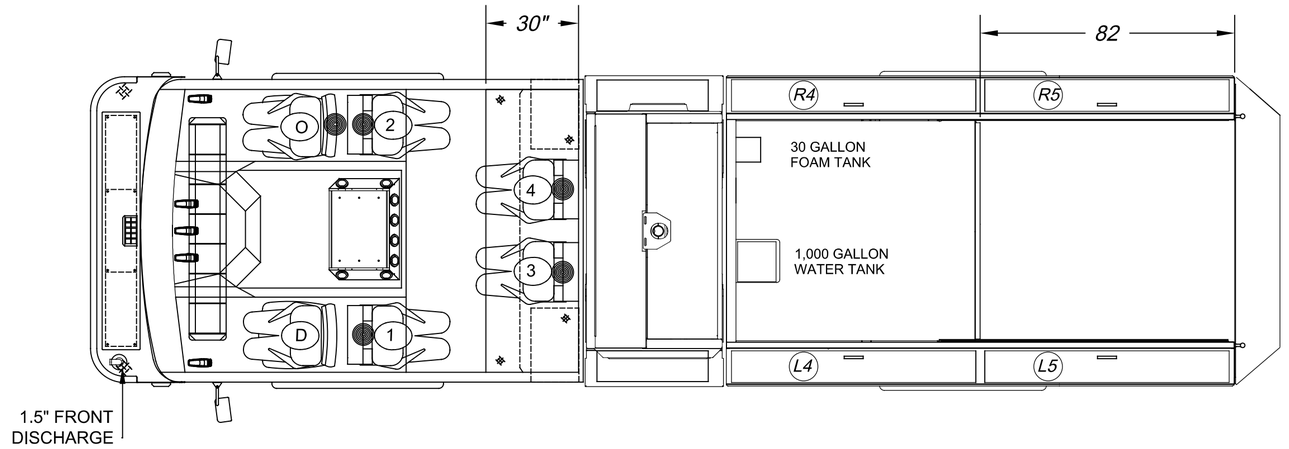

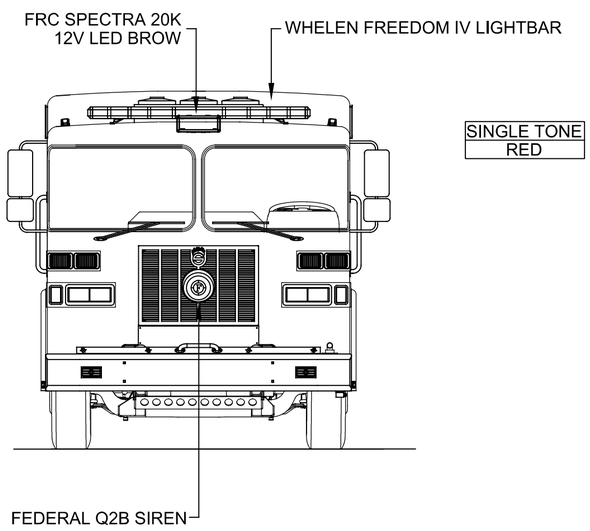

SINGLE TONE
RED

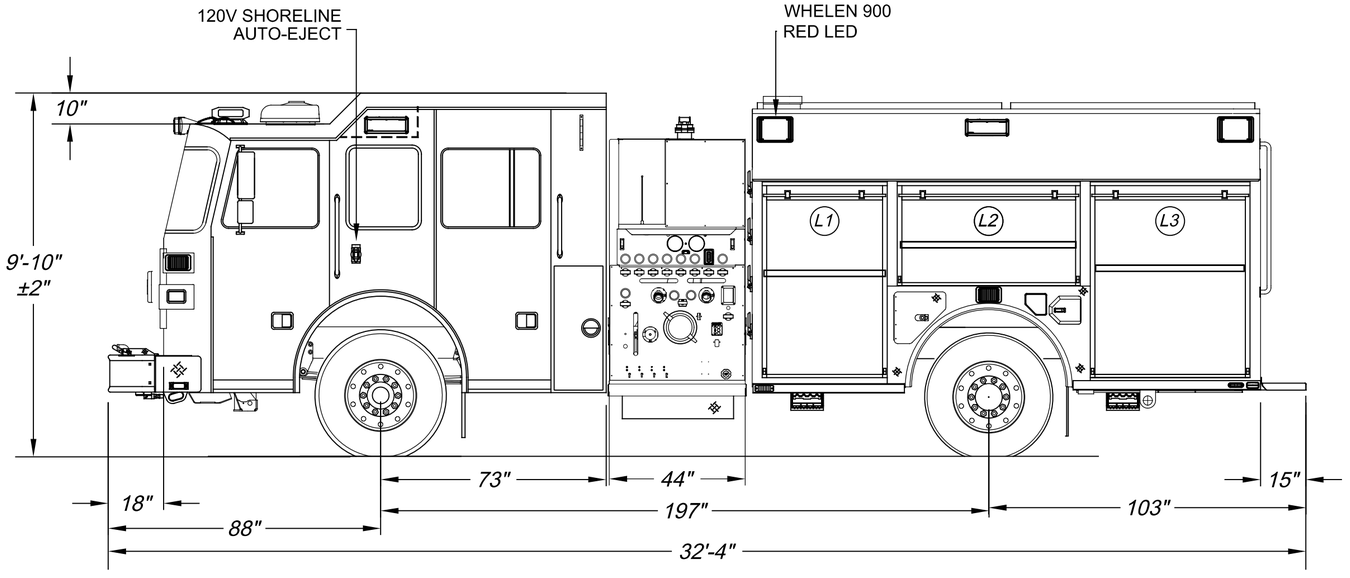

DIMENSIONS SHOWN ON THIS DRAWING ARE APPROXIMATE AND ARE SUBJECT TO MINOR DEVIATIONS DURING CONSTRUCTION.

IN THE EVENT OF A DISCREPANCY BETWEEN THE SUTPHEN SPECIFICATIONS AND DRAWING, THE SUTPHEN SPECIFICATIONS SHALL PREVAIL.

DRAWING IS FOR REFERENCE ONLY. SOME ITEMS PROPOSED MAY NOT BE SHOWN OR NOTED.

CUSTOMER APPROVAL

NAME: _____

TITLE: _____

DATE: _____

REV.	DESCRIPTION	BY	DATE
C	REFERENCE SHOP ORDER REVISION EMAIL	TF	02/04/25
B	REFERENCE SHOP ORDER REVISION EMAIL	TF	12/16/24
A	**REV-A** SHOP ORDER	TF	10/31/24

THIS PRINT IS PROVIDED ON A RESTRICTED BASIS AND IS NOT TO BE USED IN ANY WAY DETRIMENTAL TO THE INTEREST OF SUTPHEN CORPORATION.

DRAWN BY: T.FAHOUM

DATE: 09/17/24

MFG. FACILITY: URBANA STOCK PUMPER

SUTPHEN

STOCK 602

PROGRAM 1 CUSTOM PUMPER

DWG. NO.: HS-8222

Sutphen Component Report Dealership: Sutphen Corporation	HS- 8222 Stock 602 (G9)
	Order#: DO004159 Contact: Richie Miller Position: Sales Operations Manager Phone: 614-923-2453 Mobile: 614-813-8028 Email: richie.miller@sutphencorp.com

Bill To	Ship To
Customer: Sutphen Corporation Contact: Richie Miller, Sales Operations Manager Address: PO Box 158, Amlin, Ohio 43002	Customer: Sutphen Corporation Contact: Richie Miller, Sales Operations Manager Address: 6450 Eiterman Rd., Dublin, Ohio 43016

Comments
Project Manager: Tawfik Fahoum Sales Person: Richie Miller Revision Level: **REV-C** Truck Type: Program Pumper, G9 Body Facility: Urbana

Line	Item #	Qty	Item Description/Comments
1		1	**ENG Facility = Urbana.
2		1	**ENG Truck Series = Program 1.
3		1	**ENG Pump Module Series = Program Module.
4		1	**ENG Electrical System = Point-to-Point.
5	10000225	1	STD WIRING SCHEMATIC (USB)
6	10001200	1	MAXIMUM APPARATUS HEIGHT = N/A
7		1	**ENG Overall Apparatus Height = 9'-10"+/- 2".
8	10001220	1	MAXIMUM APPARATUS LENGTH = N/A
9		1	**ENG Overall Apparatus Length = 32'-4" +/- 2".
			CHASSIS
10	10010001	1	CHASSIS, CUSTOM
11	51010105	1	WHEELBASE = 197”
12		1	**REV-C** **ENG PTA Number = 99.188".
13		1	**ENG AF Number = 54".
14	25010100	1	FRAME, 10" DOUBLE RAILS, SINGLE AXLE (50K PSI)

Line	Item #	Qty	Item Description/Comments
15	45040100	1	FRONT BUMPER CLIP
16	45010001	1	FRONT TOW EYES, BELOW BUMPER, PAINTED
17		1	**ENG Painted frame color, black.
18	46010000	1	REAR TOW EYES, PAINTED
19		1	**ENG Painted frame color, black.
20	40010250	1	STEERING - ROSS TAS-85
21	22010000	1	DRIVE LINE, SPICER, 1710 SERIES
22	23014130	1	ENGINE, CUMMINS L9 450HP DOC-DPF-DEF-SCR OBD
23	23029100	1	ENGINE WARRANTY, 5 YEAR, 100,000 MILES FOR CUMMINS L9
24	23029300	1	AFTERTREATMENT WARRANTY, 5 YEAR, 100,000 MILES FOR CUMMINS L9
25	23030006	1	AIR INTAKE/EMBER SEPARATOR
26	23031173	1	FUEL FILTER/WATER SEPARATOR, PRIMARY, FLEETGUARD, FS1098
27	23031210	1	FUEL FILTER, SECONDARY, FLEETGUARD, FF63009
28	47012510	1	TRANSMISSION, ALLISON GEN 6, EVS3000 (L9, X10MHD)
29	23110005	1	JACOBS ENGINE BRAKE FOR CUMMINS L ENGINES
30	47024050	1	TRANSMISSION COOLER
31	47030000	1	ALLISON TOUCH PAD SHIFTER
32	47030150	1	SHIFTER PAD GEARING, 5 GEARS OPEN, 6TH GEAR LOCKED
33	21021200	1	COOLING SYSTEM
34	21030195	1	COOLANT FILTER
35	21030000	1	FAN CLUTCH
36	21030200	1	RADIATOR COOLANT RECOVERY, PRESSURIZED SYST
37	26010010	1	FUEL TANK, STAINLESS STEEL, 65 GAL
38	26030000	1	FUEL FILL
39	26030100	1	FUEL COOLER
40	24040000	1	DIESEL EXHAUST FLUID TANK

Line	Item #	Qty	Item Description/Comments
41		1	**ENG DEF Access = Hinged Door for DEF Access.
42	13010225	1	ALTERNATOR, LEECE NEVILLE 420 AMP BLP4003
43	13030100	1	LOW VOLTAGE ALARM, FLOYD BELL TXB-V86-515-QF
44	15010500	1	BATTERIES, INTERSTATE TYPE 31 MHD (4)
45	15031700	1	BATTERY JUMPER TERMINALS
46	15030465	1	120V SHORELINE INLET, KUSSMAUL SUPER 20 AUTO EJECT W/ OLED DISPLAY 091-55-266-XX
47		1	**ENG Shoreline Inlet Location = Driver's side of Cab, standard location.
48		1	**ENG Shoreline Cover Color = Red.
49	15031510	1	BATTERY CHARGER, KUSSMAUL CHIEF 4012
50		1	**ENG Battery Charger Note: Chassis Division to provide/install battery charger & Auto Eject (if applicable)
51	14022120	1	FRONT AXLE, HENDRICKSON STEERTEK NXT 20,000 LB.
52	41022120	1	FRONT SUSPENSION, HENDRICKSON 20,000 LBS. (4) 56" LEAFS
53	41040510	1	STEER ASSIST
54	43010306	1	FRONT TIRES, GOODYEAR 385/65R22.5 LRJ ARMOR MAX PRO 22.5 x 12.25 WHEELS
55	14510530	1	REAR AXLE, MERITOR RS-26-185 27,000 LB.
56	14530100	1	TOP SPEED, 68 MPH
57	42010015	1	REAR SUSPENSION, FIREMAAX 27,000 LBS. AIR RIDE
58	44010308	1	REAR TIRES, GOODYEAR 12R22.5 X 8.25 LRH ENDURANCE RSA HIGHWAY 24,000 - 27,000 GVWR
59	42910300	1	TIRE PRESSURE MONITOR, QUICK PRESSURE
60	44210100	1	WHEELS, ALUM, ACCURIDE (max 27K rear)
61	44270100	1	HUB COVERS, FRONT & REAR, POLISHED STS (Single Axle)
62	44270300	1	CHROME LUG NUT CAPS, FRONT & REAR (Single Axle)
63	44271100	1	MUD FLAPS, FRONT (PAIR)
64	44271200	1	MUD FLAPS, REAR (PAIR)
65	16010285	1	BRAKES STEERTEK DISC PLUS EX225 FRONT, SCAM 8.625" REAR (SINGLE AXLE)
66	18010041	1	AIR BRAKE SYSTEM 4 TANKS WABCO 1200 DRYER (24K, 27K)

Line	Item #	Qty	Item Description/Comments
67	18030010	1	AIR BRAKE RELEASE VALVE, WABCO
68	18020000	1	CENTRAL LOCATION FOR AIR TANK DRAINS
69		1	**ENG Specify Central Location for Air Tank Drain Valves = Under L1 Compartment.
70	18030140	1	AIR INLET CONNECTION W/CHECK VALVE
71		1	**ENG Standard Air Inlet Location = Left hand side of Driver's step well.
72	18035110	1	AIR COMPRESSOR, KUSSMAUL AUTO PUMP AC, 100PSI
73	18036105	1	TIMER, KUSSMAUL AUTO PUMP
74	18210000	1	ELEC STABILITY CONTROL SYST
75	18110050	1	WABCO 4 CHANNEL ANTI-LOCK BRAKES W/ASR (24K, 27K)
76	53510000	1	COMPRESSION FITTINGS ON AIR SYSTEM (CHASSIS)
77	54010000	1	MISCELLANEOUS ITEMS ON CHASSIS
78	54010010	1	DATA, SAFETY & WARNING TAGS APPLICATION, ADHESIVE
			CAB
79	11023250	1	CAB TSAL4E 73" 10" RR 1/2
80	11030025	1	CAB CERTIFICATION - STRUCTURAL INTEGRITY
81	11030950	1	CAB LOCKDOWN LATCHES
82	11031025	1	CAB TILT SYSTEM, AIR CONTROL VALVE
83	11031030	1	CAB TILT CONTROL LOCATION, OFFICER'S SIDE PUMP PANEL
84	11031100	1	MANUAL BACK-UP TILT SYSTEM
85	11031350	1	CAB DOORS, FULL LENGTH (4)
86	11031386	1	CAB STEPS, LOWER & INTERMEDIATE DIAMONDPLATE
87	11031399	1	CAB STEP LIGHTING, TECNIQ E45 LED STRIP LIGHTS
88	11031421	1	CAB DOOR WINDOWS, POWER (4)
89	11031401	1	CAB SIDE WINDOWS, FIXED, BOTH SIDES
90	11031460	1	NO WINDOWS, BACK WALL OF CAB
91	11031465	1	WINDOW TINTING (LIMO TINT 8%) - EACH (4)
92	52010010	1	ELECTRIC INTERMITTENT WIPERS

Line	Item #	Qty	Item Description/Comments
93	52030100	1	DEACTIVATE WINDSHIELD WIPERS WITH PARKING BRAKE ENGAGED
94		1	**ENG Override Switch to Re-Engage Wipers? = Yes.
95	52030200	1	WINDSHIELD WASHER RESERVOIR
96	38010020	1	MIRRORS LANG MEKRA 300 SERIES HEATED & REMOTE
97	11024400	1	UPPER GRILLE, LEVEL STYLE FACADE (L9)
98	11024510	1	FLAMING “S” LOGO, UPPER GRILLE, ILLUMINATED
99		1	**ENG LED backlight color for upper grille = Red
100	11024600	1	LOWER GRILLE, POLISHED STAINLESS (L9)
101	20010080	1	BUMPER, 18" POLISHED STAINLESS STEEL
102		1	**ENG Siren Speaker Perforations = No Speaker Perforations in Bumper.
103	20029800	1	BUMPER SIDES, DIAMONDPLATE
104	20040105	1	STORAGE WELL, DEEP CENTER, FULL WIDTH (18" BUMPER)
105	20030100	1	STORAGE WELL COVER, TREADPLATE, 2" RAISE
106	20030510	1	CUT-OUT IN STORAGE WELL COVER
107		1	**ENG Cut-Out for Treadplate Storage Well Cover = For Driver's side Front Bumper Discharge Hose Connection.
108	20030600	1	BUMPER TROUGH LIGHTING, TECNIQ E44 LED LIGHT STRIP
109	12010400	1	AIR HORNS, DUAL, HADLEY H00978 RECTANGULAR, BEHIND PERFORATION
110		1	**ENG Air Horns Location: Outboard, (1) each side.
111	12030010	1	AIR HORNS CUTOUTS IN BUMPER, BEHIND PERFORATIONS (L9 STYLE)
112	12030350	1	LANYARD CONTROL FOR AIR HORNS
113	12510109	1	ELEC SIREN, WHELEN 295HFSA7, REMOTE FLUSH MOUNT WITH REMOVABLE MIC
114	12620100	1	SIREN SPEAKER, 100W, CAST PRODUCTS, SA4201-6B-A
115	12670110	1	SIREN SPEAKER(S) INSTALLED BEHIND CAB GRILLE
116	12710100	1	SIREN, FEDERAL Q2B, GRILLE MOUNT
117		1	**ENG Q2B Wiring = Wired to Emergency Master then shed with parking brake on.
118	12730305	1	FOOT SWITCH, DRIVER'S SIDE, FOR MECH SIREN

Line	Item #	Qty	Item Description/Comments
119	12730350	1	MOMENTARY SWITCH ON DASH, OFFICER'S SIDE, FOR MECH SIREN
120	12730363	1	SIREN BRAKE SWITCH FOR MECH SIREN, DRIVER'S & OFFICER'S SIDE
121		1	**ENG Siren Brake Switch for Driver in Lower Console Position 2.
122		1	**ENG Siren Brake Switch for Officer in Lower Console Position 5.
123	32520525	1	HEADLIGHTS, LED, FIRETECH FT-4X6, DUAL STS HOUSINGS (TRIPLE UPPER WARNING)
124		1	**ENG Headlight Interior Finish = Chrome.
125	32530500	1	ALTERNATING FLASHER FOR HEADLIGHT
126		1	**ENG Independent Deactivation Switch for Alternating Flasher = Provided.
127	48010305	1	FRONT TURN SIGNALS, WHELEN 400 SERIES LED (4) (LOWER HOUSING)
128	32530750	1	ICC LIGHTS, LED, ROOF MOUNTED MARKERS, GROTE
129	27022120	1	HANDRAILS, CAB EXTERIOR, KNURLED STAINLESS STEEL (4) SIDE
130	27030615	1	COAT HOOKS ON UPPER GRAB HANDRAILS, DRIVER'S SIDE (2)
131	27030655	1	COAT HOOKS ON UPPER GRAB HANDRAILS, OFFICER'S SIDE (2)
132	27025000	1	HANDRAILS, CAB INTERIOR, BLACK RUBBER COATED (2) FRONT ENTRY
133	27030120	1	HANDRAILS, REAR CAB INTERIOR DOOR, BLACK RUBBERIZED (2) AND KNURLED STS AT WINDOW (2)
134	27040100	1	INTERIOR DOOR, NYLON STRAP
135	11032010	1	EXTERIOR COMPT, SIDE OF EXT CAB, 38" H, DS
136	11031930	1	EXTERIOR DOOR, HINGED, PAINTED
137	11032610	1	DRIVER SIDE, LEFT DOOR HINGE (OPEN TOWARDS FRONT OF CAB)
138	11032450	1	COMPT DOOR LOCK - NOT PROVIDED
139	11032110	1	OPENING TO DRIVER'S SIDE CREW SEAT COMPT
140	11032060	1	EXTERIOR COMPT, SIDE OF EXT CAB, 38" H, OS
141	11031930	1	EXTERIOR DOOR, HINGED, PAINTED
142	11032620	1	OFFICER'S SIDE, RIGHT DOOR HINGE (OPEN TOWARDS FRONT OF CAB)
143	11032450	1	COMPT DOOR LOCK - NOT PROVIDED
144	11032120	1	OPENING TO OFFICER'S SIDE CREW SEAT COMPT

Line	Item #	Qty	Item Description/Comments
145	11035420	1	DIAMONDPLATE CAB ROOF 30" x FULL WIDTH
146	31010250	1	INTERIOR, MULTISPEC BLACK SPECKLE PAINT W/BLACK EMBOSSED FRP BOARD
147	11032929	1	DOOR PANEL, FULL STS
148	31010291	1	CAB INTERIOR FLOOR COVERING, BLACK RUBBERIZED
149	22510100	1	ENGINE ENCLOSURE, FULL LENGTH
150	22510530	1	ENGINE ENCLOSURE COVERING, SCORPION BLACK URETHANE BLEND
151	11031680	1	CENTER CONSOLE W/MAP BOOK STORAGE, TOP OF ENGINE ENCLOSURE
152	22610050	1	ENGINE HOOD LIGHT, LED (1)
153	11031510	1	FLAT WORK SURFACE IN LIEU OF GLOVE BOX
154	11031712	1	UPPER CREW DOOR AREA, OPEN
155	29810100	1	CHASSIS ELECTRICAL DESCRIPTION
156	30010130	1	INSTRUMENTATION, AMETEK W/ CENTER & OVERHEAD CONSOLES
			Upper Command Console: 
157		1	**ENG Overhead Console Panel's Finish: Black Wrinkle.
158		1	**ENG Overhead Console Position 1: Switch #1: Master Emergency. Switch #2: Alternating Headlights. Switch #3: Front Scene. Switch #4: Left Scene. Switch #5: Right Scene. Switch #6: Rear Scene.
159		1	**ENG Overhead Console Position 2: -Jensen Stereo.
160		1	**ENG Overhead Console Position 3: -HVAC Controls.
161		1	**ENG Overhead Console Position 4: -Chassis Indicators. -Seat Belt Monitor. -Air Horns Lanyard.
162		1	**ENG Overhead Console Position 5: -Blank.

Line	Item #	Qty	Item Description/Comments
163		1	**ENG Overhead Console Position 6: -Blank.
164		1	**ENG Overhead Console Position 7: -Blank.
165	30010500	1	LOWER COMMAND CONSOLE, L9 & X12
			Lower Command Console (9L & 12L engines): 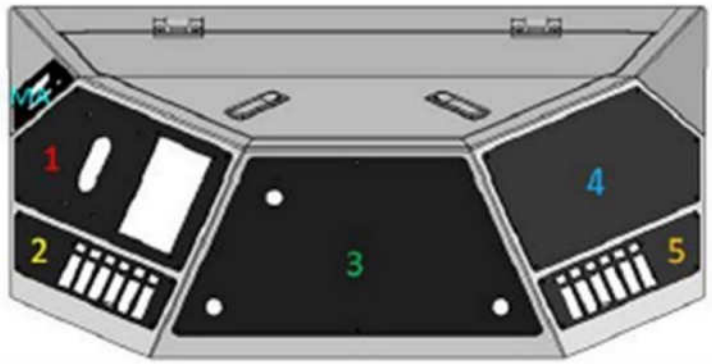
166		1	**ENG Lower Command Console Finish: Black Urethane.
167		1	**ENG Lower Console Panel's Finish: Black Wrinkle.
168		1	**ENG Lower Console Position 1: -Transmission Shift Pad. - Pump shift.
169		1	**ENG Lower Console Position 2: Switch #1: Jake On/Off. Switch #2: Jake Low/Med/High. Switch #3: High Idle. Switch #4: Blank. Switch #5: Siren Brake.
170		1	**ENG Lower Console Position 3: -Parking Brake. -Whelen Siren Head (installed as low as possible). -12V PowerPoints (called out below).
171		1	**ENG Lower Console Position 4: -Blank.
172		1	**ENG Lower Console Position 5: Switch #1: Master Emergency. Switch #2: Blank. Switch #3: Mech Siren. Switch #4: Siren Brake.
173	30010610	1	CAB PUMP SHIFTER, ELECTRIC W/ROUND KNOB (FOR HALE G-SERIES PUMP TRANSMISSION)
174	30011000	1	PUMP INTERLOCK, NOT CONNECTED WITH ODOMETER
175	29930210	1	DELETE MAPBOOK SLOT ON FRONT BREAKER PANEL
176	29910100	1	PROGRAMMABLE LOAD MANAGER, CLASS-1 SUPERNODE II

Line	Item #	Qty	Item Description/Comments
177	30031100	1	HIGH IDLE SWITCH
178	11040000	1	CAB ACCESSORY FUSE PANEL
179	84541540	1	POWER & GROUND STUDS, UPPER COMMAND CONSOLE
180		1	**ENG Requirements (AMPS) for Power/Ground Studs in Upper Command Console: (1) 12-volt 60-amp, direct to the battery ignition off. (1) 12-volt 30-amp switched battery first position on ignition switch. (1) 12-volt 30-amp ignition power second position on ignition switch. (1) 12-volt 125-amp ground.
181	84541545	1	POWER & GROUND STUDS, LOWER COMMAND CONSOLE
182		1	**ENG Requirements (AMPS) for Power/Ground Studs in Lower Command Console: (1) 12-volt 60-amp, direct to the battery. (1) 12-volt 30-amp controlled by the ignition switch. (1) 12-volt 125-amp ground.
183	84541550	1	POWER & GROUND STUDS, UNDER OFFICER'S SEAT
184		1	**ENG Requirements (AMPS) for Power/Ground Studs Under Officers Seat: (1) 12-volt 40-amp controlled by the battery switch. (1) 12-volt 60-amp controlled by the ignition switch. (1) 12-volt 60-amp, direct to the battery. (1) 12-volt 100-amp ground.
185	30110000	1	VEHICLE DATA RECORDER, AKRON/WELDON
186	30031810	2	12V POWER POINT (2)
187		1	**ENG Power Point Location #1: Lower Console Position 3, Driver's corner.
188		1	**ENG Power Point Location #2: Lower Console Position 3, Officer's corner.
189	30031830	2	12V DUAL POWER POINT, USB/USBC, POWERWERX (2)
190		1	**ENG Powerwerx USB/USBC Power Point Location #1: Lower Console Position 3, Driver's corner.
191		1	**ENG Powerwerx USB/USBC Power Point Location #2: Lower Console Position 3, Officer's corner.
192	33510030	1	INTERIOR CAB LIGHTS, WHELEN 6" ROUND RED/CLEAR LED (2)
193	34010030	1	INTERIOR CREW LIGHTS, WHELEN 6" ROUND RED/CLEAR LED (2)
194	28010750	1	DEFROSTER, HEATER & A/C, SEVERE CLIMATE (TM-31)
195	28090003	1	HEAT TO FEET
196	28090100	1	A/C TO FACE
197	28030500	1	DEFROSTER DUCTWORK, ENTIRE WINDSHIELD
198	11031687	1	TOP HEAT/AC STORAGE, TOOL MOUNTING PLATE, 25" x 19.5"

Line	Item #	Qty	Item Description/Comments
199	38510104	1	DRIVER'S SEAT, BOSTROM SIERRA HIGH BACK AIR RIDE ABTS (DURAWEAR PLUS, LOW SEAM)
200	38340110	1	PRIMARY SEAT POSITION
201	38350100	1	SEAT BELT CONFIGURATION, PULL FROM LEFT SHOULDER TO BUCKLE AT RIGHT HIP
202	38320000	1	HELMET STORED IN COMPARTMENT
203	39010118	1	OFFICER'S SEAT, BOSTROM TANKER 450, ABTS SCBA (DURAWEAR PLUS, LOW SEAM)
204	38340110	1	PRIMARY SEAT POSITION
205	38350200	1	SEAT BELT CONFIGURATION, PULL FROM RIGHT SHOULDER TO BUCKLE AT LEFT HIP
206	39030030	1	OFFICER’S SEAT COMPT, FRONT DOOR W/LOCKING LATCH
207	38320000	1	HELMET STORED IN COMPARTMENT
208	39521129	1	CREW SEAT 1, BOSTROM TANKER 450, ABTS SCBA (DURAWEAR PLUS, LOW SEAM)
209	38340110	1	PRIMARY SEAT POSITION
210	38350200	1	SEAT BELT CONFIGURATION, PULL FROM RIGHT SHOULDER TO BUCKLE AT LEFT HIP
211	38320000	1	HELMET STORED IN COMPARTMENT
212	39521130	1	CREW SEAT 2, BOSTROM TANKER 450, ABTS SCBA (DURAWEAR PLUS, LOW SEAM)
213	38340110	1	PRIMARY SEAT POSITION
214	38350100	1	SEAT BELT CONFIGURATION, PULL FROM LEFT SHOULDER TO BUCKLE AT RIGHT HIP
215	38320000	1	HELMET STORED IN COMPARTMENT
216	39521430	1	CREW SEAT 3, BOSTROM TANKER 400CT, ABTS SCBA FLIP UP (DURAWEAR PLUS, LOW SEAM)
217	38340120	1	SECONDARY SEAT POSITION
218	38350100	1	SEAT BELT CONFIGURATION, PULL FROM LEFT SHOULDER TO BUCKLE AT RIGHT HIP
219	38320000	1	HELMET STORED IN COMPARTMENT
220	39521431	1	CREW SEAT 4, BOSTROM TANKER 400CT, ABTS SCBA FLIP UP (DURAWEAR PLUS, LOW SEAM)
221	38340120	1	SECONDARY SEAT POSITION
222	38350200	1	SEAT BELT CONFIGURATION, PULL FROM RIGHT SHOULDER TO BUCKLE AT LEFT HIP
223	38320000	1	HELMET STORED IN COMPARTMENT
224	39550200	1	SEAT COLOR, BLACK

Line	Item #	Qty	Item Description/Comments
225	39610115	5	SCBA BRACKETS, IMMI SMART DOCK (5)
226	38410000	1	SEAT BELT WARNING SYSTEM, AKRON / WELDON
227	39710015	1	FULL WIDTH CREW SEAT COMPT, FRONT DROP-DOWN DOORS (73" CAB)
228	11031745	1	OVERHEAD STORAGE, FRONT OF 10" RR W/DOORS
229	30080150	1	HD STEREO, JENSEN, AM/FM/WB/BT
230	84561010	1	CAMERA SYSTEM, FRC, INVIEW TRUEVIEW, SINGLE CAMERA (WIRED)
231		1	**ENG Camera Mounting Location: Rear of Body.
232		1	**ENG Camera Monitor Mounting Location: Below Overhead Command Console Position 3.
			PUMP & PLUMBING
233	60080003	1	PUMP, HALE QMAX-1500 GPM SINGLE STAGE
234	60025000	1	GEARBOX, HALE, G-SERIES, REAR MOUNTED
235	60025950	1	PUMP GEARBOX YOKE, 1710
236	60026000	1	PUMP PACKING, HALE
237	60031005	1	ALLOY ANODES, HALE (2)
238	60035123	1	PUMP TEST, THIRD PARTY TESTING
239	61510000	1	AUXILIARY COOLER (HEAT EXCHANGER)
240	62010002	1	STAINLESS STEEL PIPING
241	66090010	1	3" TANK-TO-PUMP W/CHECK VALVE
242	61729120	1	VALVE, AKRON, HEAVY DUTY
243	61770900	1	ACTUATOR, VALVE, PUSH/PULL, CLASS 1
244	73090001	1	TANK FILL 2"
245	61729120	1	VALVE, AKRON, HEAVY DUTY
246	61770900	1	ACTUATOR, VALVE, PUSH/PULL, CLASS 1
247	61090003	1	PRESSURE GOVERNOR, CLASS 1 TPGJ1939
248	61290020	1	INTAKE PRESSURE CONTROL, TFT A1860
249	63021500	1	6" MAIN SUCTION, LEFT SIDE
250	65090000	1	2.5" LEFT SIDE INLET

Line	Item #	Qty	Item Description/Comments
251	61729120	1	VALVE, AKRON, HEAVY DUTY
252	61770905	1	ACTUATOR, VALVE, SWING CONTROL
253	60036010	1	THREADS, NST
254	63025500	1	6" MAIN SUCTION, RIGHT SIDE
255	64090000	1	2.5" RIGHT SIDE INLET
256	61729120	1	VALVE, AKRON, HEAVY DUTY
257	61770905	1	ACTUATOR, VALVE, SWING CONTROL
258	60036010	1	THREADS, NST
259	65540500	1	SUCTION EXTENSION FOR FUTURE WITH BLANK OFF PLATE, OFFICER'S SIDE
260		1	**ENG Air horns will remain outboard, this option is just called out to be captured on the pump side so the port is available incase a customer wants this.
261	70525900	1	2.5" DISCHARGE, LEFT - POSITION 1
262	61729120	1	VALVE, AKRON, HEAVY DUTY
263	61770915	1	ACTUATOR, VALVE, PUSH/PULL, CLASS 1 W/ RACK & SECTOR
264	77090000	1	GAUGE, DISCH, CLASS 1 2.5"
265	61810150	1	DISCHARGE TERMINATION, 30 DEGREE ELBOW
266	60036010	1	THREADS, NST
267	70525900	1	2.5" DISCHARGE, LEFT - POSITION 2
268	61729120	1	VALVE, AKRON, HEAVY DUTY
269	61770915	1	ACTUATOR, VALVE, PUSH/PULL, CLASS 1 W/ RACK & SECTOR
270	77090000	1	GAUGE, DISCH, CLASS 1 2.5"
271	61810150	1	DISCHARGE TERMINATION, 30 DEGREE ELBOW
272	60036010	1	THREADS, NST
273	71025905	1	3" DISCHARGE, RIGHT - POSITION 3
274	61729160	1	VALVE, AKRON, SLOW CLOSE
275	61770900	1	ACTUATOR, VALVE, PUSH/PULL, CLASS 1
276	77090000	1	GAUGE, DISCH, CLASS 1 2.5"

Line	Item #	Qty	Item Description/Comments
277	61810160	1	DISCHARGE TERMINATION, STRAIGHT
278	60036010	1	THREADS, NST
279	71025900	1	2.5" DISCHARGE, RIGHT - POSITION 4
280	61729120	1	VALVE, AKRON, HEAVY DUTY
281	61770900	1	ACTUATOR, VALVE, PUSH/PULL, CLASS 1
282	77090000	1	GAUGE, DISCH, CLASS 1 2.5"
283	61810160	1	DISCHARGE TERMINATION, STRAIGHT
284	60036010	1	THREADS, NST
285	61888888	1	SPECIAL ADAPTER FOR DISCHARGE #4 2.5" NST (F) X 2.5"NST (M) 30 DEGREE DOWN
286	71590000	1	DISCHARGE, 2.5" LEFT REAR
287	61729120	1	VALVE, AKRON, HEAVY DUTY
288	61770900	1	ACTUATOR, VALVE, PUSH/PULL, CLASS 1
289	77090000	1	GAUGE, DISCH, CLASS 1 2.5"
290	61810150	1	DISCHARGE TERMINATION, 30 DEGREE ELBOW
291	60036010	1	THREADS, NST
292	72290000	1	1.5" FRONT BUMPER DISCHARGE, 2" PLUMBING
293	61729120	1	VALVE, AKRON, HEAVY DUTY
294	61770900	1	ACTUATOR, VALVE, PUSH/PULL, CLASS 1
295	77090000	1	GAUGE, DISCH, CLASS 1 2.5"
296	60036010	1	THREADS, NST
297		1	**ENG Front Bumper Swivel Location/Side = Driver's side.
298		1	**ENG Front Discharge Swivel Location/Trough = Top of Bumper.
299	72590002	1	DECK GUN DISCHARGE 3"
300	61729160	1	VALVE, AKRON, SLOW CLOSE
301	61770900	1	ACTUATOR, VALVE, PUSH/PULL, CLASS 1
302	77090000	1	GAUGE, DISCH, CLASS 1 2.5"

Line	Item #	Qty	Item Description/Comments
303	72570100	1	DECK GUN TERMINATION, THREADED
304		1	**ENG Make/Model of Dealer or Customer Supplied Deck Gun Monitor = N/A.
305	72570200	1	EXTEND-A-GUN, TASK FORCE TIPS XG18, MANUAL
306	72890000	1	CROSSLAYS, TWO 2" W/1.5" SWIVEL
307		1	**ENG Crosslay Hose Load Requirement = 200’ of 1.75” Hose Each.
308	61729120	2	VALVE, AKRON, HEAVY DUTY (2)
309	61770900	2	ACTUATOR, VALVE, PUSH/PULL, CLASS 1 (2)
310	77090000	2	GAUGE, DISCH, CLASS 1 2.5" (2)
311	60036010	2	THREADS, NST (2)
312	72910505	1	COVER, ALUM W/VINYL SIDES FOR CROSSLAYS
313		1	**ENG Crosslay/Speedlay Side Covers Color = Black.
314	72932201	1	COVER FASTENERS, BUNGIE CORDS WITH RED TAB
315		1	**ENG Specify details for side covers: Number of flaps, fasteners & and how they terminate (manufacturer’s discretion or customer specified?) = OEM Discretion.
316	61742000	1	MASTER PUMP DRAIN, MULTIPORT
317	61790510	10	DRAIN VALVES, HALE, LIFT-UP (10)
			PUMP PANEL
318	74914110	1	PRG SM1 - SIDE MOUNT PUMP PANEL (CROSSLAYS)
319	74928100	1	PUMP MODULE LENGTH, 44"
320	74929110	1	HALE PUMP MODULE CONFIGURATION, SIDE MOUNT
321	74930710	1	PANEL FINISH, BRUSHED STS 14 GAUGE (PRG)
322		1	**ENG Pump Panel Label Verbiage Standard = Yes.
323	74931055	1	COLOR CODING (PRG)
324		1	**ENG Color Coding Standard = Yes.
325	74931250	1	DISCHARGE GAUGE BEZELS, CHROME (PRG)
326	74931290	1	PUMP MODULE FRAMEWORK, SWIRL FINISH
327	74931390	1	PUMP FINISH, PAINTED BY PUMP MFG
328	74931590	1	PLUMBING FINISH, NON-PAINTED

Line	Item #	Qty	Item Description/Comments
329		1	**ENG Non-Painted Plumbing = Stainless steel welds shall be treated/coated.
330	74931690	1	EXTERIOR DUNNAGE AREA PANEL, BRUSHED STS
331	75040215	1	TROUGH IN RUNNING BOARD, BOTH SIDES
332		1	**ENG Running Board Trough Cover = Velcro Straps.
333	75590010	1	PUMP OPERATOR LIGHTS, LED (PRG)
334	75590110	1	PUMP PANEL LIGHTS OFFICER'S SIDE, LED (PRG)
335	76088888	1	SPECIAL ITEM, REMOTE MOUNT PRIMER
336		1	**ENG Remote mount primer in pump module in case future customer of demo unit wants front suction.
337	76090002	1	PUMP PANEL GAUGES & CONTROLS (PRG)
338	60090030	1	PUMP PRIMER, TRIDENT, AIR
339	60028310	1	(1) PRIMER BUTTON - MAIN SUCTION
340	76025110	1	COMPRESSION FITTINGS ON AIR SYSTEM (PRG PUMP MODULE)
341	76031970	1	AIR OUTLET, DRIVER'S SIDE PUMP PANEL
342	76030900	1	HALE TRV-L THERMAL RELIEF VALVE WITH LIGHT AT PUMP PANEL
343	76031900	1	AIR HORN PUSH BUTTON SWITCH ON PUMP PANEL
344	76590000	1	GAUGES, MASTER, CLASS 1 4.5" (PRG)
345	77590001	1	GAUGE, WATER LEVEL, CLASS 1, INTELLI-TANK ITL-40
346		1	**ENG Water Level Gauge Color = Multi Color.
347	77590040	1	GAUGE, FOAM LEVEL, CLASS 1, INTELLI-TANK ITL-4
348		1	**ENG Class of Foam for Foam Gauge = Class A.
			WATER TANK
349	83525200	1	WATER TANK BRAND, UPF
350	73531425	1	FOAM TANK 30 GALLON BUILT INTO BOOSTER TANK
351	83590005	1	WATER TANK, 1000 GAL, POLY
			BODY
352	80089500	1	BODY SUBFRAME, PROGRAM PUMPER
353	88888888	1	**REV-B** SPECIAL ITEM, FRONT BODY MOUNTING, ISOLATORS

Line	Item #	Qty	Item Description/Comments
354		1	**REV-B** **ENG In place of our standard front of body mounting, the front of the body will be mounted the Chassis using the isolator setup.
355	80189590	1	BODY G9 - ALUM 40/51 LADDERS THRU TANK
356	80245012	1	UPPER HATCH COMPARTMENT, LEFT & RIGHT SIDES
			BODY COMPARTMENTS
			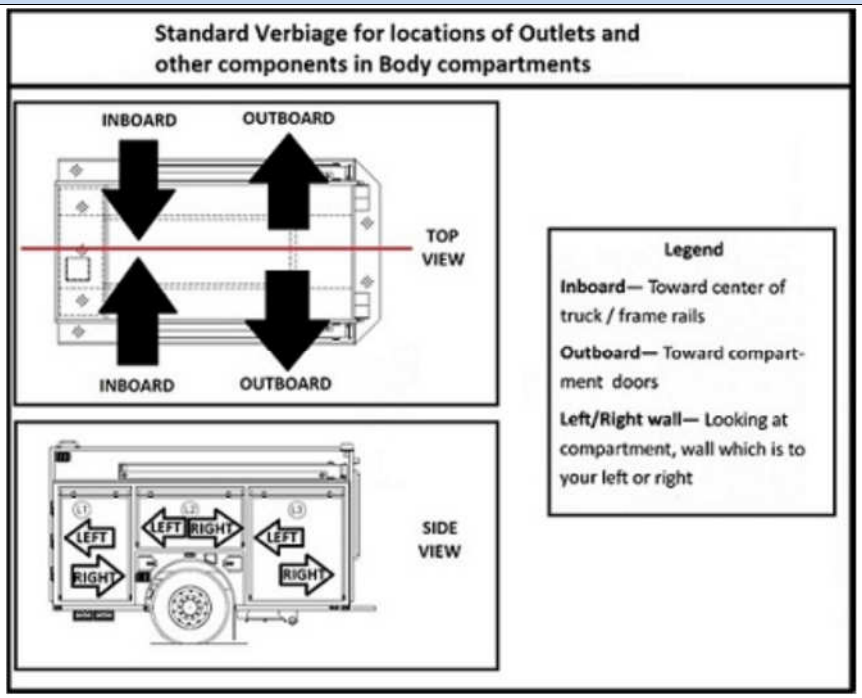
357	81165705	1	UNISTRUT TRACK IN COMPTS
358	80290012	1	COMPT DOORS, ROM ROLL-UP, PAINTED
359		1	**ENG Painted job color, red.
360	80230600	1	DOOR SILL PROTECTION, BODY COMPTS, PROTEC, CLEAR FILM
361	80225000	1	REAR COMPT DOOR (A1) ROM ROLL-UP, SATIN FINISH
362	80230650	1	DOOR SILL PROTECTION, REAR COMPT, NOT FACTORY PROVIDED
363	80230003	7	ROLL-UP DOOR DRIP PAN/GUARD (WITH DRAIN) (7)
364		1	**ENG Doors to have splash guards w/drains = All Body Roll-up Doors.
365	80230300	1	COMPT INTERIOR FINISH, SMOOTH
366	84531215	1	COMPT LIGHTING, TECNIQ LED E44 LIGHT STRIPS, 2 PER COMPT
			BODY EXTERIOR
367	81380000	1	HOSEBED W/REMOVABLE ALUMINUM FLOORING

Line	Item #	Qty	Item Description/Comments
368		1	**ENG List the Hose Bed Hose Load Req. = N/A
369	81330100	1	STANDARD HOSEBED HEIGHT
370	81410000	1	COVER, VINYL, MAIN HOSE BED
371		1	**ENG Hosebed Cover Color = Black.
372	81440230	1	COVER FASTENERS, METAL AIRPLANE LATCHES
373		1	**ENG Specify number of rear flaps, fasteners & and how they terminate (manufacturer's discretion or customer specified?) = Mfgr's Discretion.
374	81330300	1	HOSE BED DIVIDER, ADJ (1)
375	81331115	1	REMOVABLE SUPPORT BAR FOR REAR HOSEBED COVER
376	81332115	1	HOSEBED LIGHTING, SIDES, TECNIQ E44 LED LIGHT STRIPS
377	81910100	1	HANDRAILS, KNURLED STS
378	82290010	1	STEPS, FRONT BODY, IC FOLD DOWN W/LIGHT
379		1	**ENG Step Light Color = White.
380	82390001	1	STEPS, REAR BODY (14x11 & 14x8)
381	82510000	1	RUB RAILS, ANODIZED ALUM
382	83010050	1	ALUMINUM TREADPLATE (PUMPER/TANKER)
383	83030350	1	REAR STEP/TAILBOARD CORNERS, 45 DEGREE (PRG)
384	80290052	1	10 SCBA CYLINDER COMPTS (3 TRIPLE-FMI, 1 SINGLE-SIG4)
385		1	**ENG A triple bottle compartment cannot be located on the driver's side behind rear axle.
386	80290220	1	DIVIDER FOR (2) TRIPLE SCBA COMPARTMENTS
387		1	**ENG Location of Dividers for Triple SCBA Compartments = Forward of Rear Axle.
388	80290310	1	DOOR FINISH, BRUSHED STAINLESS, SINGLE/DOUBLE SCBA COMPT (1)
389	80290410	3	DOOR FINISH, DIAMONDPLATE, TRIPLE SCBA COMPT (3)
390	88520100	1	SUCTION HOSE, (2) 10' SECT 6" KOCHEK LIGHTWEIGHT
391		1	**ENG Suction Hose Location = Ladder Chute.
392	88540350	1	SUCTION HOSE MOUNTED IN LADDER CHUTE
393	88550300	1	STRAINER NOT PROVIDED

Line	Item #	Qty	Item Description/Comments
394	83030705	1	REAR FENDERS, ALUMINUM TREADPLATE
395	89011500	1	ALCO-LITE PEL-24 24'2 SEC & PRL-14 14' ROOF & 10' FOLDING
396	89590007	1	LADDER CHUTE W/SUCTION HOSE STORAGE & PIKE POLE STORAGE
397	89520210	1	LADDER ENCLOSURE, DIAMONDPLATE DOOR
			ELECTRICAL
398	84550110	1	LICENSE PLATE BRACKET W/ LIGHT, LED
399	84511100	1	BODY ELECTRICAL DESCRIPTION
400	84520000	1	BACK UP ALARM, ECCO SA917
401	85010302	1	TAILLIGHTS, WHELEN 600 SERIES, LED STOP/TAIL/TURN/REVERSE, QUAD HOUSING (PAIR)
402		1	**ENG Tail Light Housing Color = Chrome.
403	85110100	1	ICC LIGHTS, LED
404	85510200	1	STEP LIGHTS, LED, REAR BODY & WHELEN 2G AT PUMP PANEL
405	85710036	1	UNDERCARRIAGE GROUND LIGHTS, TECNIQ T44 LED
406	86528999	1	DELETE REAR WORK LIGHTS
407	86600000	1	OPTICAL WARNING SYSTEM, UPPER (PUMPER)
			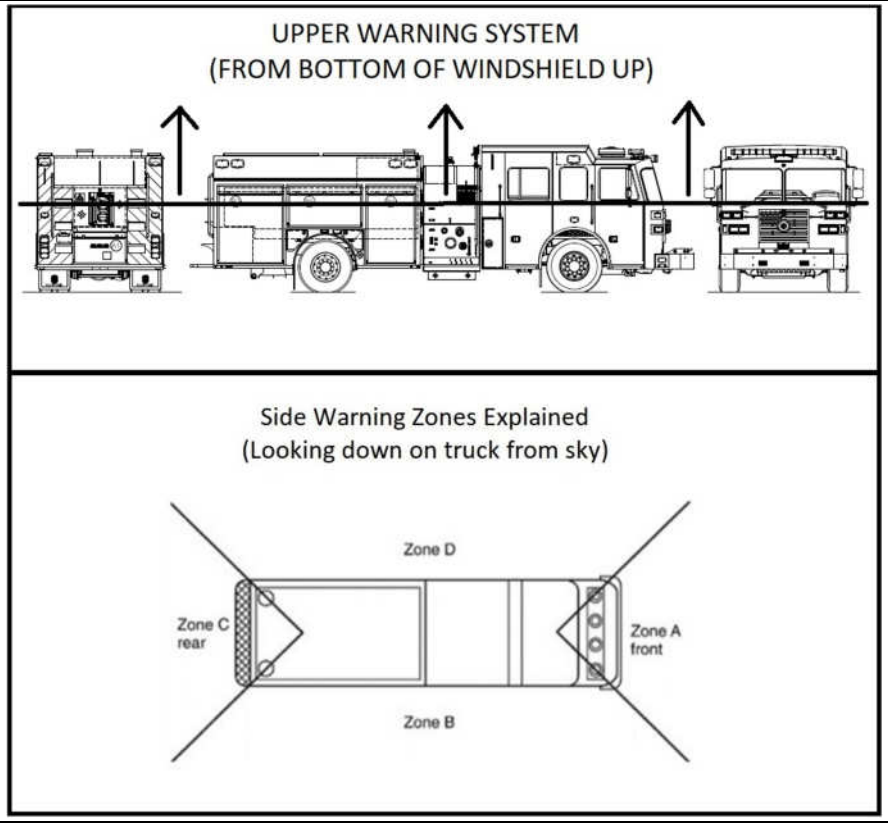

Line	Item #	Qty	Item Description/Comments
408	86610120	1	UPPER WARNING LIGHTS, ZONE A (FRONT), WHELEN FREEDOM IV 72" LED LIGHT BAR, F4N7QLED, 12 MODULES
			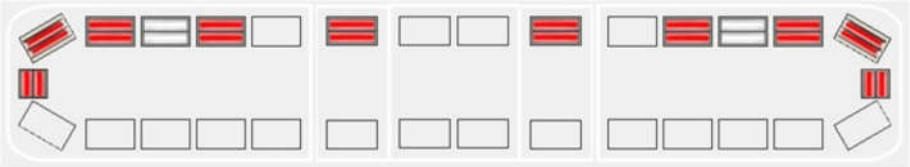
409	86920100	1	UPPER ZONE A LIGHTBAR, STANDARD CONFIGURATION
410		1	**ENG Zone A, Upper Lightbar Standard Configuration = Single light bar: (2) end red LED modules, (2) corner red LED modules, (6) forward-facing red LED modules and (2) forward-facing white LED modules. All clear outer lenses. Installed on the cab roof as far forward as possible with two (2) MK8H 5in. cast aluminum risers.
411	86699998	1	UPPER WARNING LIGHTS, ZONE B (OFFICER'S SIDE), COVERED BY ZONES A & C (Surface Mount)
412	86710300	1	UPPER WARNING LIGHTS, ZONE C (REAR), WHELEN LED, 900 SERIES SURFACE MOUNT, 90**5F*R (QTY 4)
413		1	**ENG Red LED/Red Lenses/Chrome Flanges.
414	86899998	1	UPPER WARNING LIGHTS, ZONE D (DRIVER'S SIDE), COVERED BY ZONES A & C (Surface Mount)
415	87100000	1	OPTICAL WARNING SYSTEM, LOWER (PUMPER)
			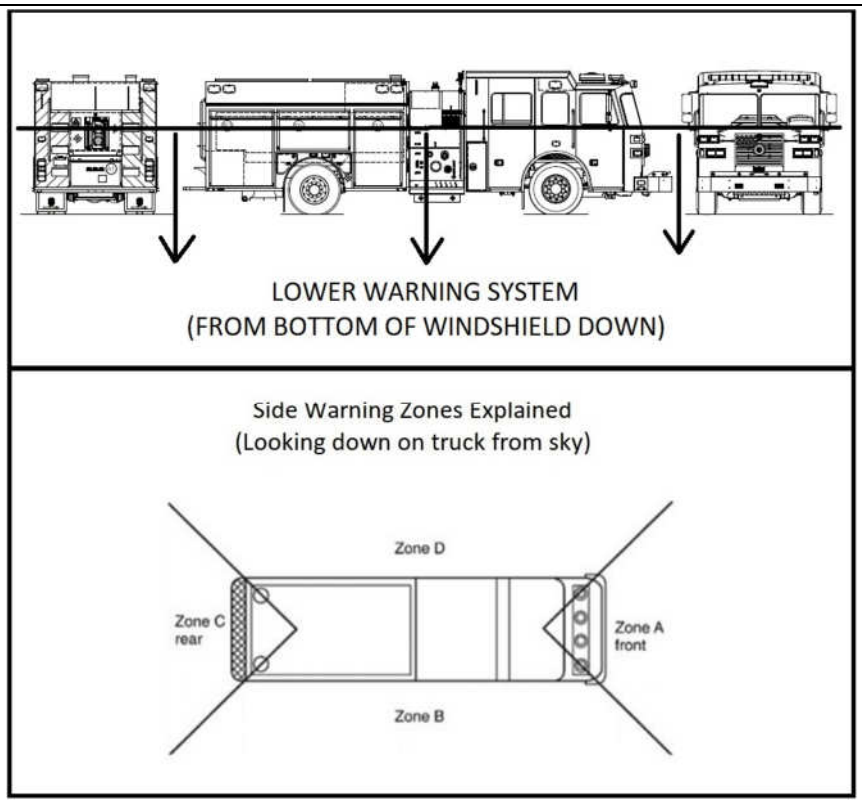
416	87110110	1	LOWER WARNING LIGHTS, ZONE A (FRONT), WHELEN 600 SUPER LED, 60*02F*R (QTY 4)

Line	Item #	Qty	Item Description/Comments
417		1	**ENG Zone A, Lower Warning Light Color, Lens Color, Details = Red LED/Red Lenses/Chrome Flanges.
418	87811130	1	LOWER, ZONE A - MOUNTING LOCATION (DUAL HOUSINGS)
419		1	**ENG Zone A, Lower - Front, Mounting Location = (2) Warnings in top headlight housing, each side.
420	87210100	1	LOWER WARNING LIGHTS, ZONE B (OFFICER'S SIDE), WHELEN 600 SUPER LED, 60*02F*R (QTY 2), ION T-SERIES LED, TLI* (QTY 1)
421		1	**ENG Zone B, Lower Officer's Side Warning Light Color, Lens Color, Details = Red LED/Red Lenses/Chrome Flanges.
422	87812110	1	LOWER, ZONE B - MOUNTING LOCATION (PUMPERS, TANKERS, RESCUES)
423		1	**ENG Zone B, Lower - Officer's Side, Mounting Location = -(1) Warning Light near the front corner of the Apparatus. -(1) Warning Light near the rear Axle. -(1) Warning Light near the rear corner of the Apparatus. -Reference Shop Order Drawing for lights and placement.
424	87310100	1	LOWER WARNING LIGHTS, ZONE C (REAR), WHELEN 600 SUPER LED, 60*02F*R (QTY 2)
425		1	**ENG Zone C, Lower Rear Warning Light Color, Lens Color, Details = Red LED/Red Lenses.
426	87410100	1	LOWER WARNING LIGHTS, ZONE D (DRIVER'S SIDE), WHELEN 600 SUPER LED, 60*02F*R (QTY 2), ION T-SERIES TLI* (QTY 1)
427		1	**ENG Zone D, Lower Driver's Side Warning Light Color, Lens Color, Details = Red LED/Red Lenses/Chrome Flanges.
428	87814110	1	LOWER, ZONE D - MOUNTING LOCATION (PUMPERS, TANKERS, RESCUES)
429		1	**ENG Zone D, Lower - Driver's Side, Mounting Location = -(1) Warning Light near the front corner of the Apparatus. -(1) Warning Light near the rear Axle. -(1) Warning Light near the rear corner of the Apparatus. -Reference Shop Order Drawing for lights and placement.
430	87537742	1	ADDITIONAL WARNING LIGHTS, WHELEN 900 SERIES LED, 90**5F*R (PAIR) (1)
431		1	**CLAR NOTES, -Red LED/Red Lenses/Chrome Flanges. -(1) Each side of body, front corners, high.
432	88390902	1	SCENE LIGHT, FRC SPECTRA 20K, 12V LED, BROW (1)
433		1	**ENG Scene Light Details = -White Housing, Chrome Bezel, Switched in Cab, Overhead Console Position 1, "Front Scene".
434	88390912	4	SCENE LIGHT, FRC SPECTRA 20K, 12V LED, SURFACE MOUNT (4)
435		1	**CLAR NOTES, -(1) light each side of Cab above middle Cab windows. Chrome Bezels. Switched in Cab, Overhead Console Position 1, "Left Scene", "Right Scene". -(1) light each side of Body above L2/R2 compartments. Chrome Bezels. Switched in Cab, Overhead Console Position 1, "Left Scene", "Right Scene".
436	88390950	2	SCENE LIGHT, FRC SPECTRA 900, 12V LED, SURFACE MOUNT (2)

Line	Item #	Qty	Item Description/Comments
437		1	**ENG Scene Light Details = -Rear of Body, under Whelen 900 Warning lights. Chrome Bezels. Switched in Cab, Overhead Console Position 1, "Rear Scene". Wired to Reverse.
			PAINT & FINISH
438	89910010	1	CORROSION REDUCTION PROGRAM (PROPOSALS)
439	90010020	1	PAINT SCHEME
440	90030004	1	PAINT, SINGLE TONE
441		1	**ENG Single Tone Paint Color = Red.
442	90030154	1	PAINT FRAME RAILS & BODY REAR DROP - BLACK
443	90030190	1	TEXTURED FRAME RAIL COATING, PLUMBING AREA
444	90030015	1	A/C CONDENSER PAINTED ROOF COLOR
445		1	**ENG Note Paint AC Condenser Color = Red.
446	90680120	1	CHEVRON STRIPING, REAR BODY OUTBOARD, REFLEXITE
447		1	**ENG Chevron Striping, Rear Body Color = #030 Red Transparent & #L2 Fluorescent Lime.
			EQUIPMENT
448	91010000	1	MISC EQUIP - (1) PINT TOUCH-UP PAINT, STAINLESS STEEL NUTS & BOLTS
449	91030700	1	ZIAMATIC SAC-44 FOLDING WHEEL CHOCKS (PAIR) MTD W/ SQCH-44H HOLDERS
450		1	**ENG Wheel Chock Mounting Locations = (1) Under L1 Compartment and (1) Under L3 Compartment.
			COMPLETION & WARRANTY
451	99010100	1	MANUALS, ELECTRONIC VERSION (2-USB)
452	99031105	1	PICK-UP UNIT AT FACTORY
453	99520110	1	WARRANTY, ONE YEAR
454	99521100	1	WARRANTY, FRAME, LIFETIME
455	99521200	1	WARRANTY, CAB STRUCTURAL, 10 YR.
456	99521300	1	WARRANTY, BODY STRUCTURAL, 10 YR.
457	99521400	1	WARRANTY, PAINT, 10 YR.
458	99521900	1	WARRANTIES, MAJOR VENDOR COMPONENTS

DATE: February 27, 2025

TO: Honorable Mayor and City Commissioners

VIA: T. Michael Stavres, City Manager
M.J. Carnevale, Deputy City Manager
Eric Labbe, Economic Opportunity and Community Investment Director
Sean Byers, Planning Manager

FROM: Chris Young, Senior Planner

SUBJECT: Resolution R-25-03: Request by KRPC Willowbrook, LLC for final plat approval of the Willowbrook North Subdivision. General Location: Subdivision is generally located south of Lucerne Park Road (SR 544) and north of the Lake Fannie/Lake Smart Canal.

BACKGROUND

KRPC Willowbrook, LLC is requesting final plat approval for Willowbrook North. The 132.9-acre subdivision tract is generally located south of Lucerne Park Road (SR 544) and north of the Lake Fannie/Lake Smart Canal.

The single-family residential subdivision contains 434 building lots and nine (9) common lots consisting of stormwater retention, open space areas, lift-stations, and rights-of-way dedication. Internal roadways are contained within 40-foot rights-of-way and will be dedicated to the Willowbrook Community Development District (CDD). All water, reuse, and sewer utilities will be owned and maintained by the City, while all drainage conveyances, internal roadways, and street lighting will be maintained by the CDD.

A performance bond issued by Lexon Insurance Company in the amount of $7,235,221.79 has been submitted to the City to cover the cost of remaining infrastructure items to be completed. Incomplete items include earthwork, sanitary sewer, potable water, stormwater management, and engineering certification.

CONSISTENCY WITH FUTURE LAND USE AND ZONING

Willowbrook North was developed according to the requirements contained in Planned Unit Development Ordinance O-20-04. The subdivision meets the minimum requirements established by this ordinance. Additionally, the subdivision is consistent with the adopted Neighborhood-Suburban Future Land Use.

INFRASTRUCTURE

Water service to the subdivision is from the Winter Haven Water System and wastewater will be treated at Wastewater Treatment Plant 2. There is adequate capacity in these systems to serve this subdivision. Access to the subdivision is from Lucerne Park Road (SR 544) and, in the future, from Martin Luther King Jr. Boulevard through a future rights-of-way dedication. These roadways have sufficient capacity to serve this subdivision upon build-out.

FINANCIAL IMPACT

Using an estimated taxable value of $300,000 per lot, this subdivision will have an estimated taxable value of $130.2 million, and will generate approximately $858,018 per year in City ad valorem revenues at the anticipated millage rate of 6.59. Additional revenue will be received through the provision of City services and taxes on utilities.

STRATEGIC PLAN ALIGNMENT

This is an approval of a final subdivision plat and is not specifically defined as a goal or strategy in the Strategic Plan. However, it is generally aligned with the Economic Sustainability and Responsible Government Pillars.

CONCLUSION

The proposed subdivision is consistent with the Comprehensive Plan and all requirements of Chapter 177, Florida Statutes, for the platting of land.

RECOMMENDATION

Staff recommends the City Commission approve Resolution R-25-03.

ATTACHMENTS

- Location Map
- Resolution R-25-03

Location Map

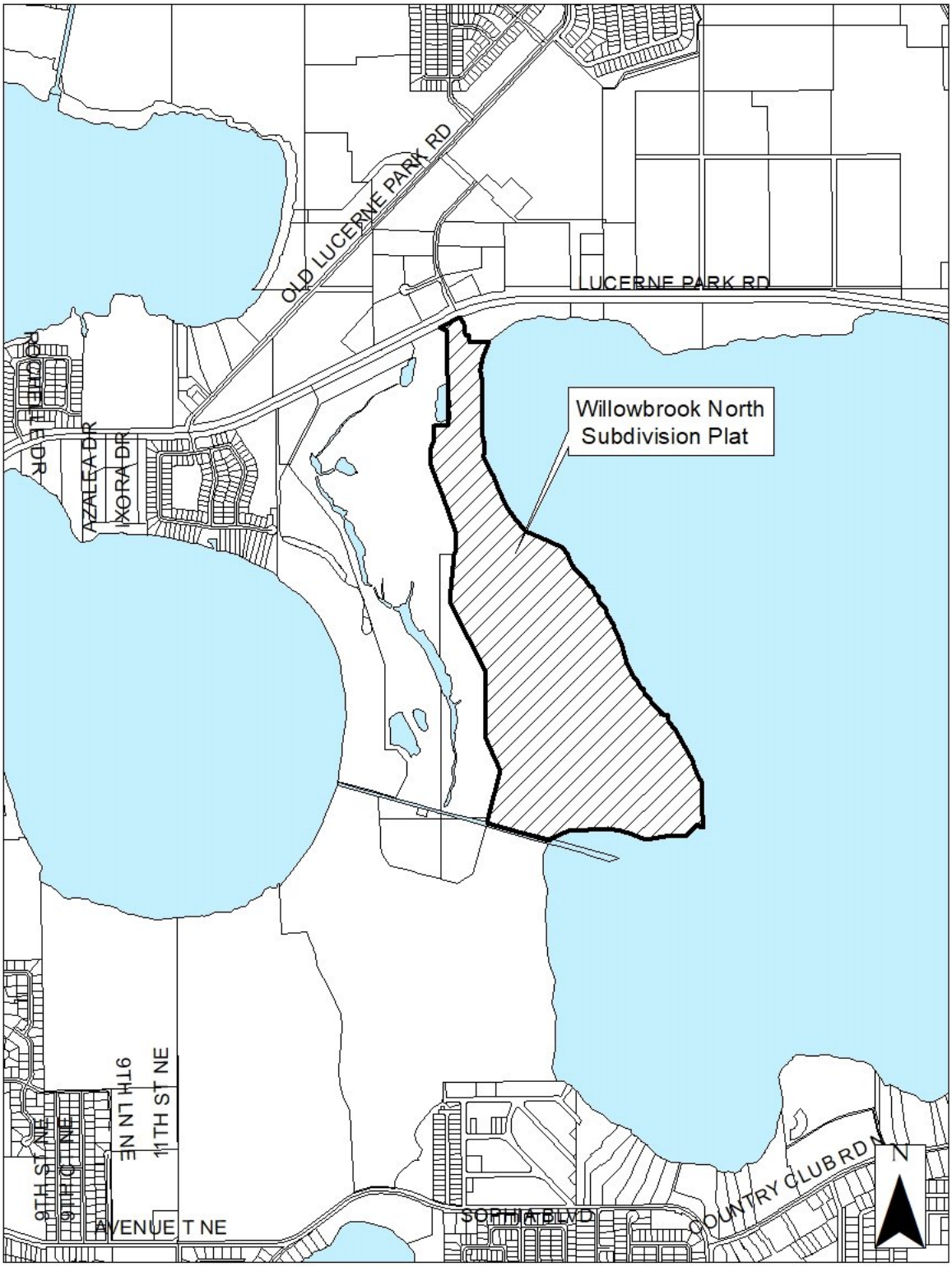

Space for Recording

RESOLUTION R-25-03

A RESOLUTION APPROVING THAT CERTAIN PLAT ENTITLED "WILLOWBROOK NORTH" FOR FILING IN ACCORDANCE WITH CHAPTER 177, FLORIDA STATUTES WITH SPECIFIC CONDITIONS; PROVIDING FOR THE ADMINISTRATIVE CORRECTION OF SCRIVENER'S ERRORS; AND ESTABLISHING AN EFFECTIVE DATE. (General location: Subdivision is generally located south of Lucerne Park Road (SR 544) on the west shore of Lake Fannie)

WHEREAS, KRPC Willowbrook, LLC, the owner of the below described lands has submitted that certain plat entitled "Willowbrook North" for filing and acceptance by the City Commission of the City of Winter Haven in accordance with Chapter 177 of the Florida Statutes and Chapter 21 of the City of Winter Haven Code of Ordinances.

NOW, THEREFORE, BE IT RESOLVED BY THE CITY COMMISSION OF THE CITY OF WINTER HAVEN, FLORIDA:

1. That certain plat entitled "Willowbrook North" and showing the following described property, to wit: See Exhibits "A" and "B" which are attached hereto and made a part hereof, was presented to the City Commission for approval on the 10th Day of March, 2025. The City Commission having reviewed said plat and having been otherwise fully advised in the premises, hereby approves said plat for filing and accepts the dedications notated thereon in accordance with Chapter 177, Florida Statutes subject to the conditions set forth herein below.

2. That KRPC Willowbrook LLC, owner of the lands described in Exhibits "A" and "B" attached hereto has submitted a Performance Bond issued by Lexon Insurance Company to the City of Winter Haven in the amount of $7,235,211.79 to insure completion of all required infrastructure and improvements in the subdivision shown on the plat being approved for filing herein.

3. The City of Winter Haven does not accept the utility systems for the subject lands including but not limited to water, reuse, and wastewater systems at this time until all such systems, as may be constructed and noted on the plat, have passed all required tests, all required certifications have been obtained, and the systems are fully operational pursuant to City standards. Further, no certificates of occupancy for any structures constructed thereon

will be issued until all such utility systems and other required infrastructure and improvements as required by the City of Winter Haven Code of Ordinances and applicable Florida law are fully operational and have been accepted by the City and/or appropriate entity with jurisdiction.

4. The adoption of this Resolution is not intended to be an affirmative acceptance of any stormwater drainage systems or internal road right-of-way for this subdivision as may be notated on the Plat and/or that may exist and/or be constructed within the lands contained within the Plat being approved herein. Accordingly, the City of Winter Haven is not accepting ownership and/or responsibility for any stormwater drainage systems or internal road rights-of-way for this subdivision which shall remain the responsibility of the entity and/or individuals to whom they are dedicated on the Plat.

5. The administrative correction of typographical and/or scrivener's errors in this Resolution which do not affect the intent may be authorized by the City Manager or designee, without need of public hearing, by filing a corrected or recodified copy of same with the City Clerk.

6. This Resolution shall take effect immediately upon passage, provided however, that a certified copy of this Resolution shall be filed with the Polk County Board of County Commissioners and with the Clerk of the Circuit Court in and for Polk County, Florida, and duly recorded in the Public Records of Polk County, Florida.

INTRODUCED AND PASSED by the City Commission of the City of Winter Haven, Florida, in regular session this 10th day of March, 2025.

CITY OF WINTER HAVEN

_____
MAYOR-COMMISSIONER
Nathaniel J. Birdsong, Jr.

ATTEST:

_____
CITY CLERK
Vanessa Castillo, MMC

Approved as to form:

_____
CITY ATTORNEY
Frederick J. Murphy, Jr.

Exhibit “A”

Location Map

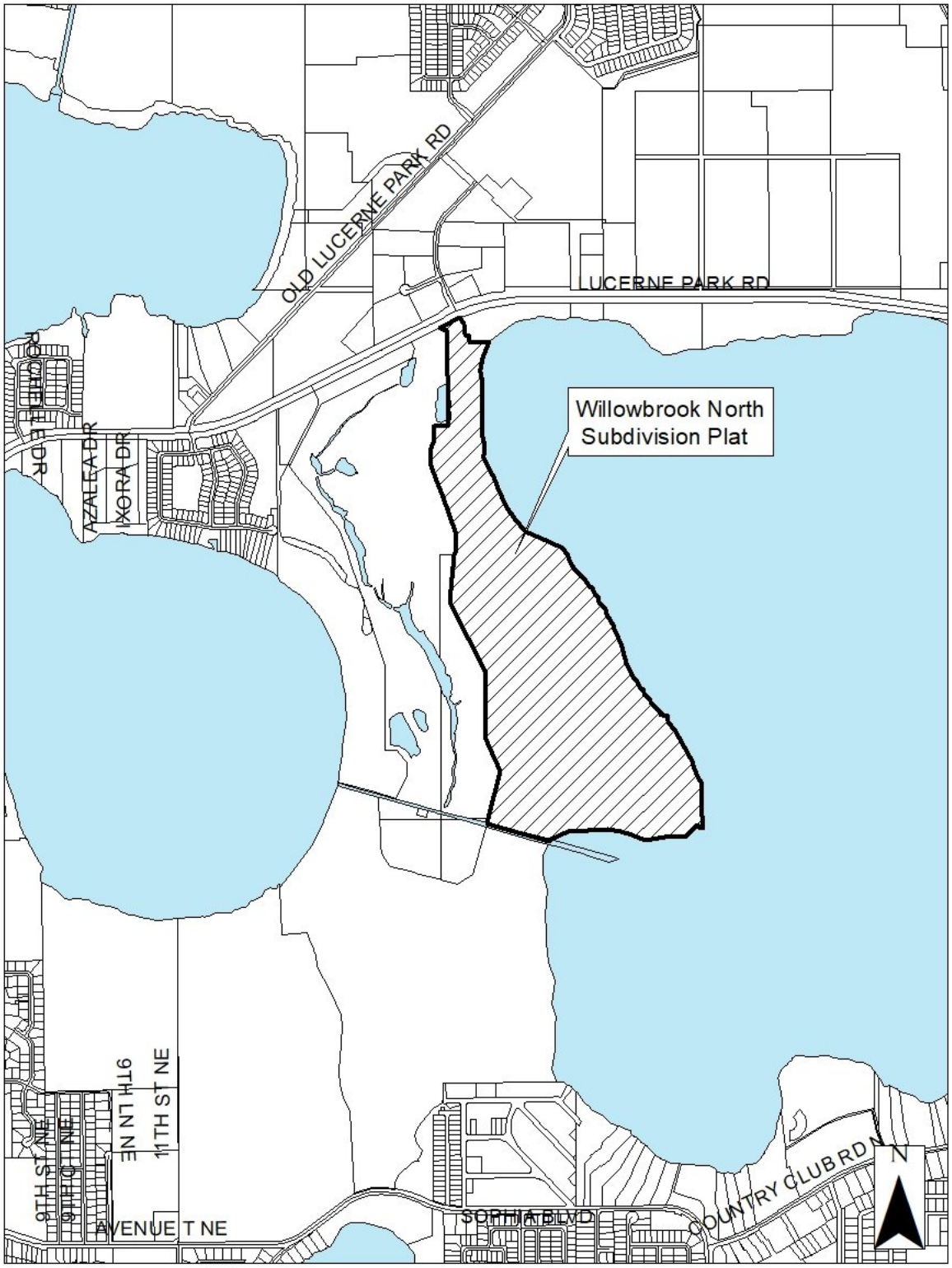

Exhibit "B"
Page 1 of 16

WILLOWBROOK NORTH

SHEET 1 OF 16

A REPLAT OF PORTIONS OF LOTS 258, 267, 268, AND UNNAMED RIGHT-OF-WAYS OF THE PLAT OF LUCERNE PARK FRUIT ASSOCIATION, RECORDED IN PLAT BOOK 3B, PAGE 67 OF THE PUBLIC RECORDS OF POLK COUNTY, FLORIDA, SITUATED WITHIN SECTIONS 10, 11, 14 & 15, TOWNSHIP 28 SOUTH, RANGE 26 EAST, CITY OF WINTER HAVEN, POLK COUNTY, FLORIDA

LEGAL DESCRIPTION

A PARCEL OF LAND BEING A REPLAT OF PORTIONS OF LOTS 258, 267, 268, AND UNNAMED RIGHT-OF-WAYS OF THE PLAT OF LUCERNE PARK FRUIT ASSOCIATION, RECORDED IN PLAT BOOK 3B, PAGE 67 OF THE PUBLIC RECORDS OF POLK COUNTY, FLORIDA, SITUATED WITHIN SECTIONS 10, 11, 14 & 15, TOWNSHIP 28 SOUTH, RANGE 26 EAST, CITY OF WINTER HAVEN, POLK COUNTY, FLORIDA, BEING MORE PARTICULARLY DESCRIBED AS FOLLOWS:

COMMENCE AT THE NORTHEAST CORNER OF SECTION 10, TOWNSHIP 28 SOUTH, RANGE 26 EAST; THENCE, ALONG THE EAST LINE OF SAID SECTION 10, RUN SOUTH 00°07'26" EAST A DISTANCE OF 37.45 FEET TO A POINT ON THE SOUTHERLY RIGHT-OF-WAY OF STATE ROAD NO. 544 (LUCERNE PARK ROAD); THENCE RUN SOUTH 89°22'57" WEST ALONG SAID SOUTHERLY RIGHT-OF-WAY LINE A DISTANCE OF 1099.06 FEET TO A POINT OF CURVATURE OF A CURVE TO THE LEFT WITH A RADIUS OF 1844.86 FEET, A CENTRAL ANGLE OF 22°43'03", A CHORD BEARING SOUTH 78°31'48" WEST WITH A CHORD DISTANCE OF 726.69 FEET; THENCE, ALONG SAID CURVE OF SAID RIGHT-OF-WAY LINE, RUN A DISTANCE OF 731.48 FEET TO A POINT ON SAID RIGHT-OF-WAY LINE TO THE POINT OF BEGINNING; THENCE, DEPARTING SAID RIGHT-OF-WAY LINE AND ALONG THE NEW DIVIDING HUNDRED SIX (106) COMMENCE AN ORDERED BY A SURVEY PERMIT, INC., PROJECT NO. 1579, ROBERT E. LAZENBY IV, P.E. #52206, PSM #6289, RUN (1) SOUTH 24°16'34" EAST A DISTANCE OF 65.37 FEET TO A POINT OF CURVATURE OF A CURVE TO THE RIGHT WITH A RADIUS OF 102.00 FEET, A CENTRAL ANGLE OF 22°50'18", A CHORD BEARING SOUTH 12°59'26" EAST WITH A CHORD DISTANCE OF 39.01 FEET; THENCE, ALONG SAID CURVE, RUN (2) A DISTANCE OF 40.66 FEET TO A POINT OF TANGENCY; THENCE RUN (3) SOUTH 01°41'43" EAST A DISTANCE OF 41.72 FEET TO A POINT OF CURVATURE OF A CURVE TO THE RIGHT WITH A RADIUS OF 17.00 FEET, A CENTRAL ANGLE OF 90°00'03", A CHORD BEARING SOUTH 43°41'17" EAST WITH A CHORD DISTANCE OF 24.01 FEET; THENCE, ALONG SAID CURVE, (4) RUN A DISTANCE OF 26.70 FEET TO A POINT OF TANGENCY; THENCE RUN (5) NORTH 88°18'46" EAST A DISTANCE OF 28.64 FEET; THENCE RUN (6) SOUTH 87°43'19" EAST A DISTANCE OF 69.00 FEET; THENCE RUN (7) NORTH 88°57'41" EAST A DISTANCE OF 161.46 FEET; THENCE RUN (8) SOUTH 71°43'55" WEST A DISTANCE OF 69.23 FEET; THENCE RUN (9) SOUTH 10°47'49" WEST A DISTANCE OF 111.02 FEET; THENCE RUN (10) SOUTH 08°23'56" EAST A DISTANCE OF 31.76 FEET; THENCE RUN (11) SOUTH 13°24'42" EAST A DISTANCE OF 54.55 FEET; THENCE RUN (12) SOUTH 05°18'05" EAST A DISTANCE OF 110.32 FEET; THENCE RUN (13) SOUTH 02°02'27" WEST A DISTANCE OF 49.92 FEET; THENCE RUN (14) SOUTH 07°31'19" EAST A DISTANCE OF 378.65 FEET; THENCE RUN (15) SOUTH 01°52'16" EAST A DISTANCE OF 33.99 FEET; THENCE RUN (16) SOUTH 01°07'03" WEST A DISTANCE OF 61.24 FEET; THENCE RUN (17) SOUTH 03°47'57" WEST A DISTANCE OF 61.32 FEET; THENCE RUN (18) SOUTH 09°58'37" EAST A DISTANCE OF 85.84 FEET; THENCE RUN (19) SOUTH 02°33'06" WEST A DISTANCE OF 82.31 FEET; THENCE RUN (20) SOUTH 00°59'58" WEST A DISTANCE OF 41.05 FEET; THENCE RUN (21) SOUTH 27°20'51" EAST A DISTANCE OF 119.34 FEET; THENCE RUN (22) SOUTH 21°59'15" EAST A DISTANCE OF 43.92 FEET; THENCE RUN (23) SOUTH 25°25'06" EAST A DISTANCE OF 89.73 FEET; THENCE RUN (24) SOUTH 31°47'04" EAST A DISTANCE OF 69.12 FEET; THENCE RUN (25) SOUTH 14°00'47" EAST A DISTANCE OF 69.12 FEET; THENCE RUN (26) SOUTH 25°45'39" EAST A DISTANCE OF 203.70 FEET; THENCE RUN (27) SOUTH 35°13'25" EAST A DISTANCE OF 123.37 FEET; THENCE RUN (28) SOUTH 39°05'39" EAST A DISTANCE OF 72.07 FEET; THENCE RUN (29) SOUTH 82°38'36" EAST A DISTANCE OF 86.31 FEET; THENCE RUN (30) SOUTH 07°19'36" EAST A DISTANCE OF 61.86 FEET; THENCE RUN (31) SOUTH 15°17'05" EAST A DISTANCE OF 86.16 FEET; THENCE RUN (32) SOUTH 83°14'36" EAST A DISTANCE OF 160.89 FEET; THENCE RUN (33) SOUTH 42°26'06" EAST A DISTANCE OF 99.69 FEET; THENCE RUN (34) SOUTH 49°45'38" EAST A DISTANCE OF 71.83 FEET; THENCE RUN (35) SOUTH 21°17'48" EAST A DISTANCE OF 112.05 FEET; THENCE RUN (36) SOUTH 45°31'19" EAST A DISTANCE OF 123.81 FEET; THENCE RUN (37) SOUTH 33°31'00" EAST A DISTANCE OF 109.20 FEET; THENCE RUN (38) SOUTH 75°19'46" EAST A DISTANCE OF 71.41 FEET; THENCE RUN (39) SOUTH 18°52'36" EAST A DISTANCE OF 140.43 FEET; THENCE RUN (40) SOUTH 42°54'47" EAST A DISTANCE OF 44.94 FEET; THENCE RUN (41) SOUTH 16°43'47" EAST A DISTANCE OF 61.08 FEET; THENCE RUN (42) SOUTH 41°23'19" EAST A DISTANCE OF 99.47 FEET; THENCE RUN (43) SOUTH 10°05'58" EAST A DISTANCE OF 49.92 FEET; THENCE RUN (44) SOUTH 26°45'37" EAST A DISTANCE OF 128.89 FEET; THENCE RUN (45) SOUTH 25°27'37" EAST A DISTANCE OF 48.89 FEET; THENCE RUN (46) SOUTH 22°23'26" EAST A DISTANCE OF 168.88 FEET; THENCE RUN (47) SOUTH 18°38'33" EAST A DISTANCE OF 14.11 FEET; THENCE RUN (48) SOUTH 16°42'55" EAST A DISTANCE OF 173.77 FEET; THENCE RUN (49) SOUTH 26°50'46" EAST A DISTANCE OF 146.33 FEET; THENCE RUN (50) SOUTH 30°56'19" EAST A DISTANCE OF 74.26 FEET; THENCE RUN (51) SOUTH 27°05'27" EAST A DISTANCE OF 68.44 FEET; THENCE RUN (52) SOUTH 23°07'54" EAST A DISTANCE OF 20.87 FEET; THENCE RUN (53) SOUTH 11°44'22" EAST A DISTANCE OF 12.59 FEET; THENCE RUN (54) SOUTH 38°42'48" EAST A DISTANCE OF 90.93 FEET; THENCE RUN (55) SOUTH 17°03'26" EAST A DISTANCE OF 77.47 FEET; THENCE RUN (56) SOUTH 46°07'10" EAST A DISTANCE OF 70.75 FEET; THENCE RUN (57) NORTH 47°04'57" EAST A DISTANCE OF 92.46 FEET; THENCE RUN (58) SOUTH 45°47'01" WEST A DISTANCE OF 27.26 FEET; THENCE RUN (59) NORTH 66°16'10" EAST A DISTANCE OF 5.12 FEET; THENCE RUN (60) SOUTH 73°14'50" EAST A DISTANCE OF 61.74 FEET; THENCE RUN (61) SOUTH 31°17'40" EAST A DISTANCE OF 47.22 FEET; THENCE RUN (62) SOUTH 34°55'37" EAST A DISTANCE OF 122.41 FEET; THENCE RUN (63) SOUTH 30°41'09" EAST A DISTANCE OF 155.62 FEET; THENCE RUN (64) SOUTH 87°39'50" EAST A DISTANCE OF 114.08 FEET; THENCE RUN (65) SOUTH 24°40'10" EAST A DISTANCE OF 108.73 FEET; THENCE RUN (66) SOUTH 28°40'09" EAST A DISTANCE OF 64.43 FEET; THENCE RUN (67) SOUTH 14°59'29" EAST A DISTANCE OF 80.74 FEET; THENCE RUN (68) SOUTH 28°18'02" EAST A DISTANCE OF 38.19 FEET; THENCE RUN (69) SOUTH 22°25'47" EAST A DISTANCE OF 66.79 FEET; THENCE RUN (70) SOUTH 32°19'46" EAST A DISTANCE OF 46.46 FEET; THENCE RUN (71) SOUTH 25°40'56" EAST A DISTANCE OF 120.04 FEET; THENCE RUN (72) SOUTH 18°03'51" EAST A DISTANCE OF 111.41 FEET; THENCE RUN (73) SOUTH 20°05'36" EAST A DISTANCE OF 30.41 FEET; THENCE RUN (74) SOUTH 69°10'51" EAST A DISTANCE OF 45.66 FEET; THENCE RUN (75) SOUTH 08°40'17" WEST A DISTANCE OF 42.32 FEET; THENCE RUN (76) SOUTH 15°18'50" WEST A DISTANCE OF 36.73 FEET; THENCE RUN (77) SOUTH 10°22'52" WEST A DISTANCE OF 17.05 FEET; THENCE RUN (78) SOUTH 00°57'02" WEST A DISTANCE OF 22.66 FEET; THENCE RUN (79) SOUTH 26°50'51" WEST A DISTANCE OF 32.66 FEET; THENCE RUN (80) NORTH 87°11'09" WEST A DISTANCE OF 56.18 FEET; THENCE RUN (81) NORTH 76°59'38" WEST A DISTANCE OF 21.13 FEET; THENCE RUN (82) NORTH 32°41'32" WEST A DISTANCE OF 49.28 FEET; THENCE RUN (83) SOUTH 47°47'36" WEST A DISTANCE OF 38.69 FEET; THENCE RUN (84) SOUTH 89°11'11" WEST A DISTANCE OF 58.16 FEET; THENCE RUN (85) SOUTH 48°51'09" WEST A DISTANCE OF 135.10 FEET; THENCE RUN (86) SOUTH 89°03'14" WEST A DISTANCE OF 202.83 FEET; THENCE RUN (87) NORTH 81°35'22" WEST A DISTANCE OF 200.26 FEET; THENCE RUN (88) NORTH 47°57'09" WEST A DISTANCE OF 144.10 FEET; THENCE RUN (89) NORTH 42°00'17" WEST A DISTANCE OF 111.16 FEET; THENCE RUN (90) NORTH 8°32'44" WEST A DISTANCE OF 27.4 FEET; THENCE RUN (91) SOUTH 80°05'05" WEST A DISTANCE OF 283.25 FEET; THENCE RUN (92) SOUTH 32°40'52" WEST A DISTANCE OF 199.21 FEET; THENCE RUN (93) SOUTH 57°20'01" WEST A DISTANCE OF 10.06 FEET TO A POINT ON THE NORTH LINE OF THAT PERPETUAL 100 FOOT WIDE EASEMENT AS RECORDED IN OFFICIAL RECORDS BOOK 1003, PAGE 001 OF THE PUBLIC RECORDS OF POLK COUNTY FLORIDA; THENCE RUN (94) NORTH 7°39'17" WEST, ALONG SAID NORTH LINE, A DISTANCE OF 866.11 FEET; THENCE, DEPARTING SAID NORTH LINE, RUN (95) NORTH 14°51'52" EAST A DISTANCE OF 540.08 FEET; THENCE RUN (96) NORTH 24°23'40" WEST A DISTANCE OF 360.00 FEET; THENCE RUN (97) NORTH 0°37'00" EAST A DISTANCE OF 628.14 FEET; THENCE RUN (98) NORTH 27°23'40" WEST A DISTANCE OF 800.00 FEET; THENCE RUN (99) NORTH 06°10'55" EAST A DISTANCE OF 680.52 FEET; THENCE RUN (100) NORTH 20°23'40" WEST A DISTANCE OF 735.55 FEET; THENCE RUN (101) NORTH 03°49'25" WEST A DISTANCE OF 140.00 FEET; THENCE RUN (102) NORTH 86°10'35" EAST A DISTANCE OF 30.00 FEET; THENCE RUN (103) NORTH 03°49'25" WEST A DISTANCE OF 125.00 FEET; THENCE RUN (104) NORTH 86°10'35" EAST A DISTANCE OF 50.00 FEET; THENCE RUN (105) NORTH 01°24'46" WEST A DISTANCE OF 641.77 FEET; THENCE RUN (106) NORTH 50°53'40" WEST A DISTANCE OF 70.66 FEET TO A POINT ON THE AFOREMENTIONED SOUTHERLY RIGHT OF WAY LINE OF STATE ROAD NO. 544; THENCE RUN NORTH 83°17'2" EAST A DISTANCE OF 75.2 FEET TO A POINT OF CURVATURE, ON SAID RIGHT-OF-WAY LINE, OF A CURVE TO THE RIGHT WITH A RADIUS OF 1844.86 FEET, A CENTRAL ANGLE OF 03°51'38", A CHORD BEARING NORTH 85°14'8" EAST WITH A CHORD DISTANCE OF 124.48 FEET; THENCE, ALONG SAID CURVE OF SAID RIGHT-OF-WAY LINE, RUN A DISTANCE OF 124.48 FEET TO A POINT ON SAID RIGHT-OF-WAY LINE TO THE POINT OF BEGINNING.

CONTAINING 5,791,624 SQUARE FEET (132.944 ACRES) MORE OR LESS.

SURVEYOR'S NOTES

1. THE BEARINGS SHOWN HEREON ARE ASSUMED NORTH, BASED ON THE SOUTHERLY RIGHT-OF-WAY LINE OF S.R. 544 (LUCERNE PARK ROAD), WHICH BEARS SOUTH 89°33'18" EAST, ASSUMED.
2. ALL LOT CORNERS AND CHANGES IN DIRECTION OF LOTS AND TRACTS SHALL BE MONUMENTED BY A 1/2" IRON ROD AND CAP STANDING "ASM LE 6393" SET IN ACCORDANCE WITH CHAPTER 177.091(9), FLORIDA STATUTES, UNLESS OTHERWISE SHOWN.
3. ALL LOT LINES INTERSECTION CURVES ARE RADIAL UNLESS OTHERWISE SHOWN AS NON-RADIAL (NR).
4. ALL PLATTED UTILITY EASEMENTS SHOWN HEREON SHALL ALSO BE EASEMENTS FOR THE CONSTRUCTION, INSTALLATION, MAINTENANCE, AND OPERATION OF CABLE TELEVISION SERVICES, PROVIDED, HOWEVER, NO SUCH CONSTRUCTION, INSTALLATION, MAINTENANCE, AND OPERATION OF SAID CABLE TELEVISION SERVICES SHALL INTERFERE WITH THE FACILITIES AND SERVICES OF AN ELECTRIC, TELEPHONE, GAS, OR OTHER PUBLIC UTILITY. IN THE EVENT A CABLE TELEVISION COMPANY DAMAGES THE FACILITIES OF A PUBLIC UTILITY, IT SHALL BE SOLELY RESPONSIBLE FOR THE DAMAGES.
5. LANDS IN THE VICINITY OF DRAINAGE AREAS, RETENTION AREAS, AND/OR SWALES MAY BE SUBJECT TO TEMPORARY STANDING WATER WHEN CONDITIONS DECREASE THE RATE OF PERCOLATIONS AND DRAINAGE RUNOFF.
6. THE PLATTED LANDS ARE LOCATED WITHIN FLOOD ZONES "X" AND "AE", AS SHOWN ON THE FLOOD INSURANCE RATE MAPS (FIRM), COMMUNITY PANEL NO. 12105C0336G & 12105C0336G, BOTH BEARING AN EFFECTIVE DATE OF DECEMBER 22ND, 2016. ZONE "X" DENOTES AREAS DETERMINED TO BE OUTSIDE THE 0.2% ANNUAL CHANCE FLOODPLAIN. ZONE "AE" DENOTES AREAS SUBJECT TO INUNDATION BY THE 1% ANNUAL CHANCE FLOOD EVENT (BASE FLOOD ELEVATIONS DETERMINED).
7. THE ELEVATIONS SHOWN HEREON ARE BASED ON THE NORTH AMERICAN VERTICAL DATUM OF 1988 (NAVD88). VERTICAL INFORMATION BASED ON: (1) BENCHMARK "A 464 2,017" HAVING A PUBLISHED ELEVATION OF 130.62' (NAVD 88) DESCRIBED AS: "LARGE ENGRAVED MAG & WASHER STAMPED WITH A BAR MAGNET" AND (2) BENCHMARK "2838 A 2017" HAVING A PUBLISHED ELEVATION OF 132.43' (NAVD 88) DESCRIBED AS: ALUMINUM ROD WITH DISK ATTACHED AND ENGRAVED IN A 4-INCH PVC PIPE FLUSH WITH THE GROUND.
8. THE PROPERTY SHOWN HEREON IS SUBJECT TO CERTAIN MATTERS OF TITLE AS REPORTED IN THAT CERTAIN PROPERTY INFORMATION REPORT PREPARED BY FIRST AMERICAN TITLE INSURANCE COMPANY (FATIC FILE NO.: 1102297332), BEARING AN EFFECTIVE DATE OF SEPTEMBER 23, 2021, SAID TITLE MATTERS ARE LISTED BELOW AND SHOWN GRAPHICALLY ON THIS PLAT:

   8.A. EASEMENT GRANTED TO TAMPA ELECTRIC COMPANY, ITS SUCCESSORS AND ASSIGNS RECORDED IN JUNE 26, 1972 IN OFFICIAL RECORDS BOOK 1458, PAGE 845, PUBLIC RECORDS OF POLK COUNTY, FLORIDA. (AFFECTS, AS SHOWN)

   8.B. UNDERGROUND EASEMENT GRANTED TO TAMPA ELECTRIC COMPANY, ITS SUCCESSORS AND ASSIGNS RECORDED JUNE 26, 1972 IN OFFICIAL RECORDS BOOK 1458, PAGE 846, PUBLIC RECORDS OF POLK COUNTY, FLORIDA. (AFFECTS, AS SHOWN)

   8.C. EASEMENT GRANTED TO DUKE ENERGY FLORIDA, LLC, A FLORIDA LIMITED LIABILITY COMPANY D/B/A DUKE ENERGY, ITS SUCCESSORS AND ASSIGNS RECORDED JANUARY 24, 2020 IN OFFICIAL RECORDS BOOK 11117, PAGE 2121, PUBLIC RECORDS OF POLK COUNTY, FLORIDA. (AFFECTS, AS SHOWN)

   8.D. ACCESS ROAD EASEMENT GRANTED TO DUKE ENERGY FLORIDA, LLC, A FLORIDA LIMITED LIABILITY COMPANY D/B/A DUKE ENERGY, ITS SUCCESSORS AND ASSIGNS RECORDED NOVEMBER 23, 2021 IN OFFICIAL RECORDS BOOK 11882, PAGE 1081, PUBLIC RECORDS OF POLK COUNTY, FLORIDA. (AFFECTS, AS SHOWN)

LEGEND

	= CHANGE IN DIRECTION (NO CORNER SET)
	= SET 4"x4" CONCRETE MONUMENT (UNLESS OTHERWISE NOTED)
O	= SET 1/2" IRC (IRON PIN) & CAP) STAMPED "PRM LB 6393" IN ACCORDANCE WITH F.S. 177.091(7)
⊗	= SET NAIL AND DISK ("PCP LB 6393") IN ACCORDANCE WITH F.S. 177.091 (7) (UNLESS OTHERWISE NOTED)
R	= RADIUS
Δ	= CENTRAL ANGLE (DELTA)
CH	= CHORD DISTANCE
CB	= CHORD BEARING
L	= ARC LENGTH
BFE	= BASE FLOOD ELEVATION
CM	= CONCRETE MONUMENT
DE	= DRAINAGE EASEMENT
LD	= LICENSED BUSINESS
NAVD	= NORTH AMERICAN VERTICAL DATUM
(OA)	= OVERALL
ORB	= OFFICIAL RECORDS BOOK
PE	= POINT OF ELEVATION
PCP	= PERMANENT CONTROL POINT
PG	= PAGE(S)
PI	= POINT OF INTERSECTION
PNT	= POINT OF NON TANGENCY
PRM	= PERMANENT REFERENCE MONUMENT
PSM	= PROFESSIONAL SURVEYOR AND MAPPER
PT	= POINT OF TANGENCY
UE	= UTILITY EASEMENT

NOTICE

NOTICE: THIS SUBDIVISION CONTAINS LOCAL ROADWAYS OWNED AND MAINTAINED BY WILLOWBROOK COMMUNITY DEVELOPMENT DISTRICT (CDD). MAINTENANCE OF THESE ROADWAYS, INCLUDING THE PAVEMENT, DRAINAGE INFRASTRUCTURE, STREET LIGHTING (INCLUDING MONTHLY ELECTRIC USAGE CHARGES), ACCESS GATES, AND SIGNAGE SHALL BE THE RESPONSIBILITY OF THE CDD, OR IN THE ABSENCE OF A CDD, THE LOT OWNERS OF RECORD.

NOTICE

THIS PROPERTY MAY BE SUBJECT TO, IF OCCURS, YOU SHOULD CONTACT CITY OF WINTER HAVEN AND OBTAIN THE LATEST INFORMATION ON FLOOD ELEVATIONS AND RESTRICTIONS BEFORE MAKING PLANS FOR THE USE OF THIS PROPERTY. EVEN MEETING POLK COUNTY STANDARDS DOES NOT ENSURE THAT ANY IMPROVEMENTS SUCH AS STRUCTURES, DRIVEWAYS, YARDS, SANITARY SEWER SYSTEMS AND WATER WELL SYSTEMS WILL NOT BE FLOODED IN CERTAIN RAIN EVENTS.

NOTICE

THIS PLAT, AS RECORDED IN ITS GRAPHIC FORM IS THE OFFICIAL DEPICTION OF THE SUBDIVIDED LANDS DESCRIBED HEREIN AND WILL IN NO CIRCUMSTANCES BE SUPPLANTED IN AUTHORITY BY ANY OTHER GRAPHIC OR DIGITAL FORM OF THE PLAT. THERE MAY BE ADDITIONAL RESTRICTIONS THAT ARE NOT RECORDED ON THIS PLAT THAT MAY BE FOUND IN THE PUBLIC RECORDS OF THIS COUNTY.

VICINITY MAP
NOT TO SCALE

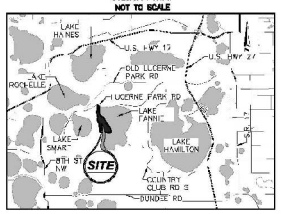

KEY MAP
NOT TO SCALE

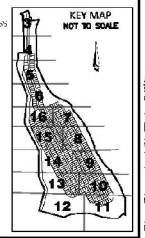

SHEET KEY

SEE SHEET 1 OF 16 FOR LEGAL DESCRIPTION, SURVEYORS NOTES, LEGEND, VICINITY MAP, CERTIFICATIONS, AND DEDICATION
SEE SHEET 2 OF 16 FOR OVERALL VIEW OF PLAT
SEE SHEETS 4-16 OF 16 FOR DETAILED VIEW OF LOTS AND TRACTS

AMERICAN SURVEYING & MAPPING, INC.
NDDS NATIONAL DUE DILIGENCE SERVICES
A DIVISION OF AMERICAN SURVEYING & MAPPING, INC.
221 Circle Drive, Maitland, FL 32751 Phone: 407-426-7979
LB#6393 nationaldiligenceservices.com

CERTIFICATE OF SURVEYOR

KNOW ALL MEN BY THESE PRESENTS, THAT THE UNDERSIGNED IS A FLORIDA REGISTERED SURVEYOR AND MAPPER, THAT THE HEREIN PLAT WAS PREPARED UNDER HIS DIRECTION AND SUPERVISION; THAT PERMANENT REFERENCE MONUMENTS (PRM'S) HAVE BEEN PLACED AND THAT PERMANENT CONTROL POINTS HAVE BEEN OR WILL BE PLACED AS REQUIRED BY ALL STATE AND LOCAL REGULATIONS AND THAT THIS PLAT COMPLIES WITH ALL SURVEY REQUIREMENTS OF CHAPTER 177, FLORIDA STATUTES. THE LAND DESCRIBED HEREON LIES IN SECTIONS 10 AND 15, TOWNSHIP 28 SOUTH, RANGE 26 EAST, CITY OF WINTER HAVEN, POLK COUNTY, FLORIDA.

E. GLENN TURNER, PSM — DATE
FLORIDA REGISTRATION NO. 6643

PREPARED BY:
AMERICAN SURVEYING AND MAPPING, INC.
221 CIRCLE DRIVE
MAITLAND, FL 32751
(407) 426-7979
REGISTRATION NUMBER OF LEGAL ENTITY: LB 6393

APPROVAL: ENGINEERING SERVICES DIVISION

THIS PLAT IS HEREBY APPROVED BY THE CITY OF WINTER HAVEN ENGINEERING SERVICES DIVISION ON THIS _____ DAY OF _____, 20__.

APPROVED

BY: _____
CITY ENGINEER, WINTER HAVEN, FLORIDA

APPROVAL/ACKNOWLEDGMENT BY THE COMMUNITY DEVELOPMENT DISTRICT

THE UNDERSIGNED, WILLOWBROOK COMMUNITY DEVELOPMENT DISTRICT, A LOCAL UNIT OF SPECIAL PURPOSE GOVERNMENT ORGANIZED AND EXISTING UNDER CHAPTER 190, FLORIDA STATUTES, DOES HEREBY JOIN IN, AND BY ITS JOINDER, RATIFY, APPROVE, CONFIRM, AND CONSENT TO THE PLAT OF WILLOWBROOK NORTH AND ALL DEDICATIONS AND RESERVATIONS THEREIN.

MONIQUE TERRELL, CHAIRPERSON, WILLOWBROOK COMMUNITY DEVELOPMENT DISTRICT

APPROVAL OF ECONOMIC OPPORTUNITY & COMMUNITY INVESTMENT DIRECTOR

THIS PLAT IS HEREBY APPROVED BY THE CITY OF WINTER HAVEN ECONOMIC OPPORTUNITY & COMMUNITY INVESTMENT DIRECTOR THIS _____ DAY OF _____, 20__.

APPROVED

DIRECTOR – WINTER HAVEN, FLORIDA

CITY SURVEYOR - CONSULTANT APPROVAL

THIS PLAT HAS BEEN REVIEWED AND FOUND TO BE SUBSTANTIALLY IN COMPLIANCE WITH THE PROVISIONS OF CHAPTER 177, FLORIDA STATUTES, RELATING TO THE MAKING OF MAPS AND PLATS.

BY: JEFFREY P. ARMERMAN, PSM — DATE
FLORIDA REGISTRATION PSM 7286
SHANTAIN 901 MAP
FLORIDA REGISTRATION LB 252

PLAT BOOK _____ PAGE _____

WILLOWBROOK NORTH

DEDICATION:

KNOW ALL MEN BY THESE PRESENTS, THAT KRPC WILLOWBROOK, LLC, A FLORIDA LIMITED LIABILITY COMPANY, BEING THE OWNER IN FEE SIMPLE OF THE LANDS DESCRIBED IN THE ATTACHED PLAT, ENTITLED "WILLOWBROOK NORTH", LOCATED IN THE CITY OF WINTER HAVEN, POLK COUNTY, FLORIDA, HEREBY DEDICATES SAID LANDS AND PLAT FOR THE USES AND PURPOSES HEREIN EXPRESSED AND DESCRIBED:

1. TRACT A, CONSISTING OF ALL INTERNAL STREETS, ROAD AND RIGHTS-OF-WAY AS DEPICTED HEREON TO THE WILLOWBROOK COMMUNITY DEVELOPMENT DISTRICT (HEREAFTER REFERRED TO AS THE "CDD") FOR OWNERSHIP, MAINTENANCE, AND OPERATION.
2. TRACT J (RECREATION) TO THE CDD FOR OWNERSHIP, OPERATION AND MAINTENANCE.
3. TRACTS C, D, E, F, AND H (OPEN SPACE) TO THE CDD FOR OWNERSHIP, OPERATION AND MAINTENANCE.
4. TRACTS G AND I (LIFT STATION) TO THE CITY OF WINTER HAVEN, FLORIDA, ITS SUCCESSORS AND ASSIGNS.
5. TRACT J (RIGHT-OF-WAY DEDICATION) TO THE CITY OF WINTER HAVEN, FLORIDA AND THE PERPETUAL USE OF THE PUBLIC.
6. THE UTILITY EASEMENTS (UE) SHOWN HEREON TO THE CITY OF WINTER HAVEN, FLORIDA, ITS SUCCESSORS AND ASSIGNS AS PERPETUAL PUBLIC UTILITY EASEMENTS.
7. THE DRAINAGE EASEMENTS (DE) SHOWN HEREON TO THE CDD FOR OWNERSHIP AND MAINTENANCE OF DRAINAGE APPURTENANCES INSTALLED THEREIN.

NO PART OF SAID LANDS, EXCEPT AS NOTED IN THIS DEDICATION OR OTHERWISE ON THE FACE OF THIS PLAT, IS DEDICATED TO THE CITY OF WINTER HAVEN, FLORIDA, OR THE PUBLIC. IN WITNESS WHEREOF, OWNER, HAS CAUSED THESE PRESENTS TO BE SIGNED AND ATTESTED TO BY THE OFFICER NAMED BELOW AFFIXED HERETO ON THE _____ DAY OF _____, 20__.

KRPC WILLOWBROOK, LLC, A FLORIDA LIMITED LIABILITY COMPANY

BY: _____
STEVE ROSSER, MANAGER

WITNESS — PRINTED NAME

WITNESS — PRINTED NAME

ACKNOWLEDGMENT:

STATE OF FLORIDA
COUNTY OF ORANGE

THE FOREGOING INSTRUMENT WAS ACKNOWLEDGED BEFORE ME BY MEANS OF [ ] PHYSICAL PRESENCE OF [ ] ONLINE NOTARIZATION, THIS _____ DAY OF _____, 20__, BY STEVE ROSSER, AS MANAGER OF KRPC WILLOWBROOK, LLC, A FLORIDA LIMITED LIABILITY COMPANY, ON BEHALF OF THE COMPANY, WHO S [ ] PERSONALLY KNOWN TO ME OR HAS PRODUCED _____ AS IDENTIFICATION.

NOTARY PUBLIC, STATE OF FLORIDA

PRINTED NAME

STATE OF FLORIDA

MY COMMISSION EXPIRES: _____

COMMISSION # _____

CITY COMMISSION APPROVAL

THIS PLAT WAS RECEIVED AND APPROVED BY THE CITY COMMISSION OF WINTER HAVEN, FLORIDA IN AN OPEN MEETING THIS _____ DAY OF _____, 20__.

APPROVED

WINTER HAVEN CITY COMMISSION

CERTIFICATE OF CITY OF WINTER HAVEN CITY CLERK

THIS PLAT HAS RECEIVED FINAL APPROVAL THIS _____ DAY OF _____, 20__.

BY _____ CITY CLERK — BY _____ DEPUTY CITY CLERK

CERTIFICATE OF COUNTY CLERK

I, STACY M. BUTTERFIELD, C.P.A., CLERK OF COURT OF POLK COUNTY, FLORIDA, DO HEREBY CERTIFY THAT THIS PLAT HAS BEEN APPROVED FOR RECORDING ON THIS _____ DAY OF _____, 20__.

FILE NUMBER _____

STACY M. BUTTERFIELD
CLERK OF THE CIRCUIT COURT
IN AND FOR OSCEOLA COUNTY FLORIDA

BY: _____ D.C.

Exhibit "B"
Page 2 of 16

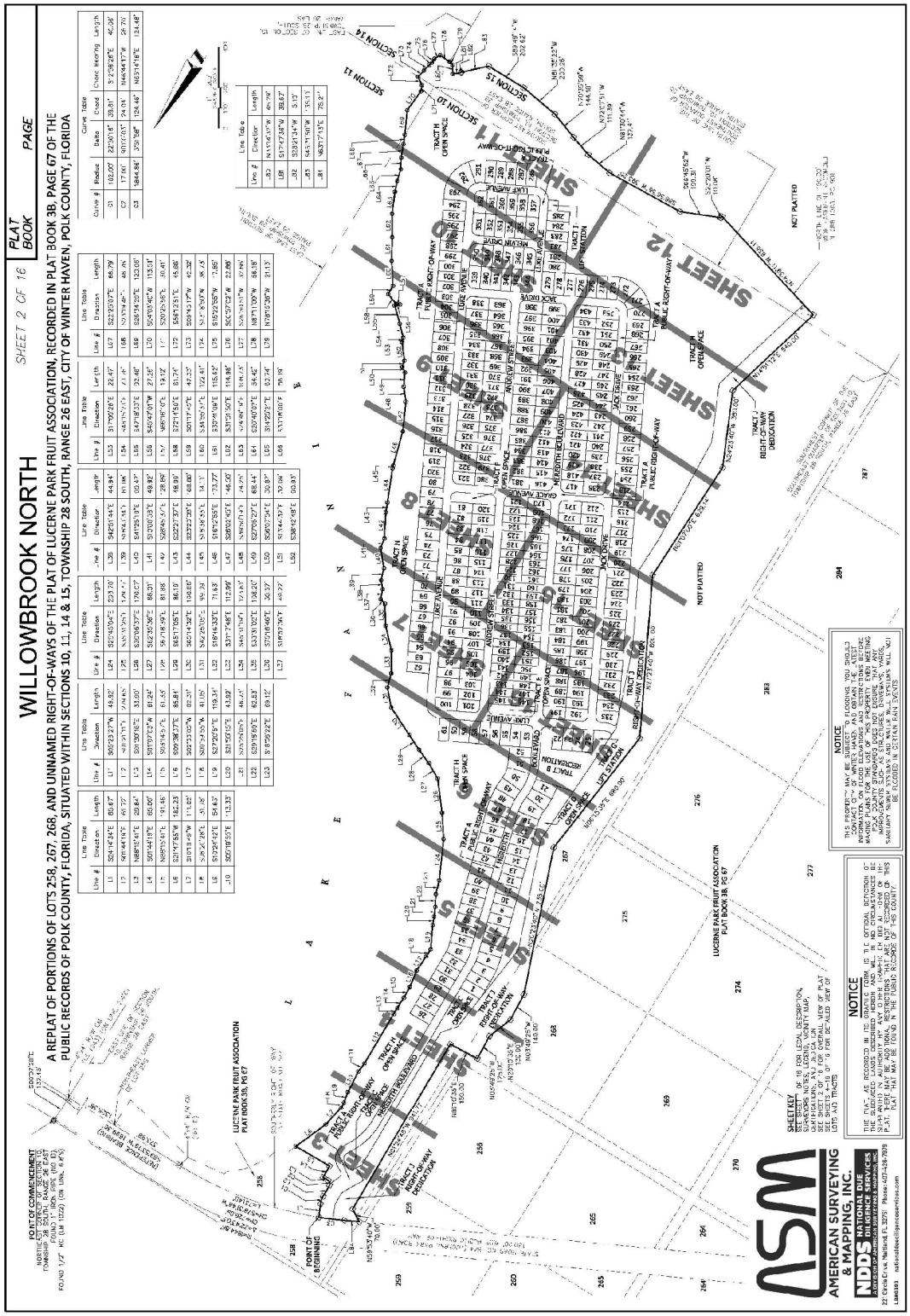

Exhibit “B”
Page 3 of 16

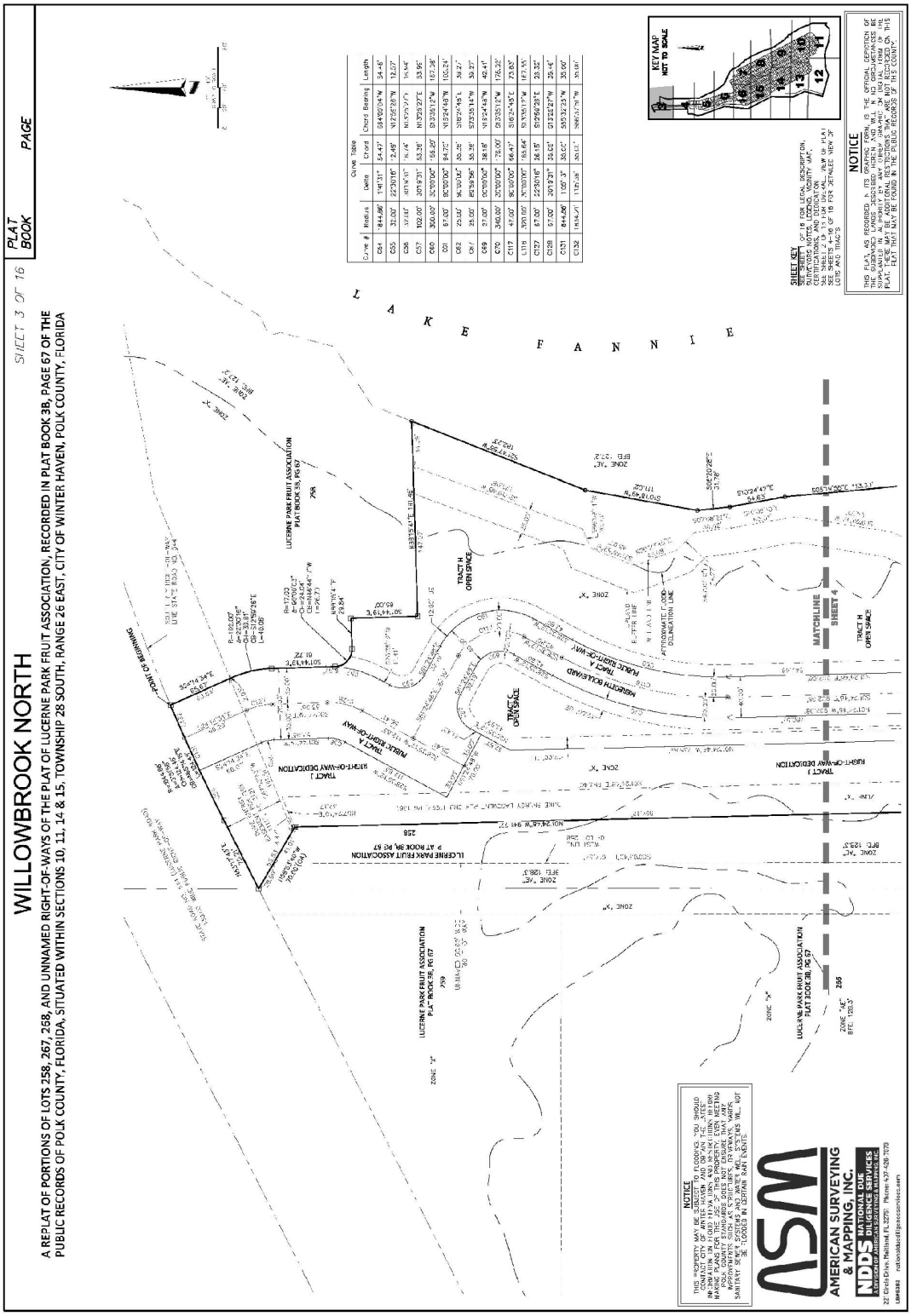

Exhibit “B”
Page 4 of 16

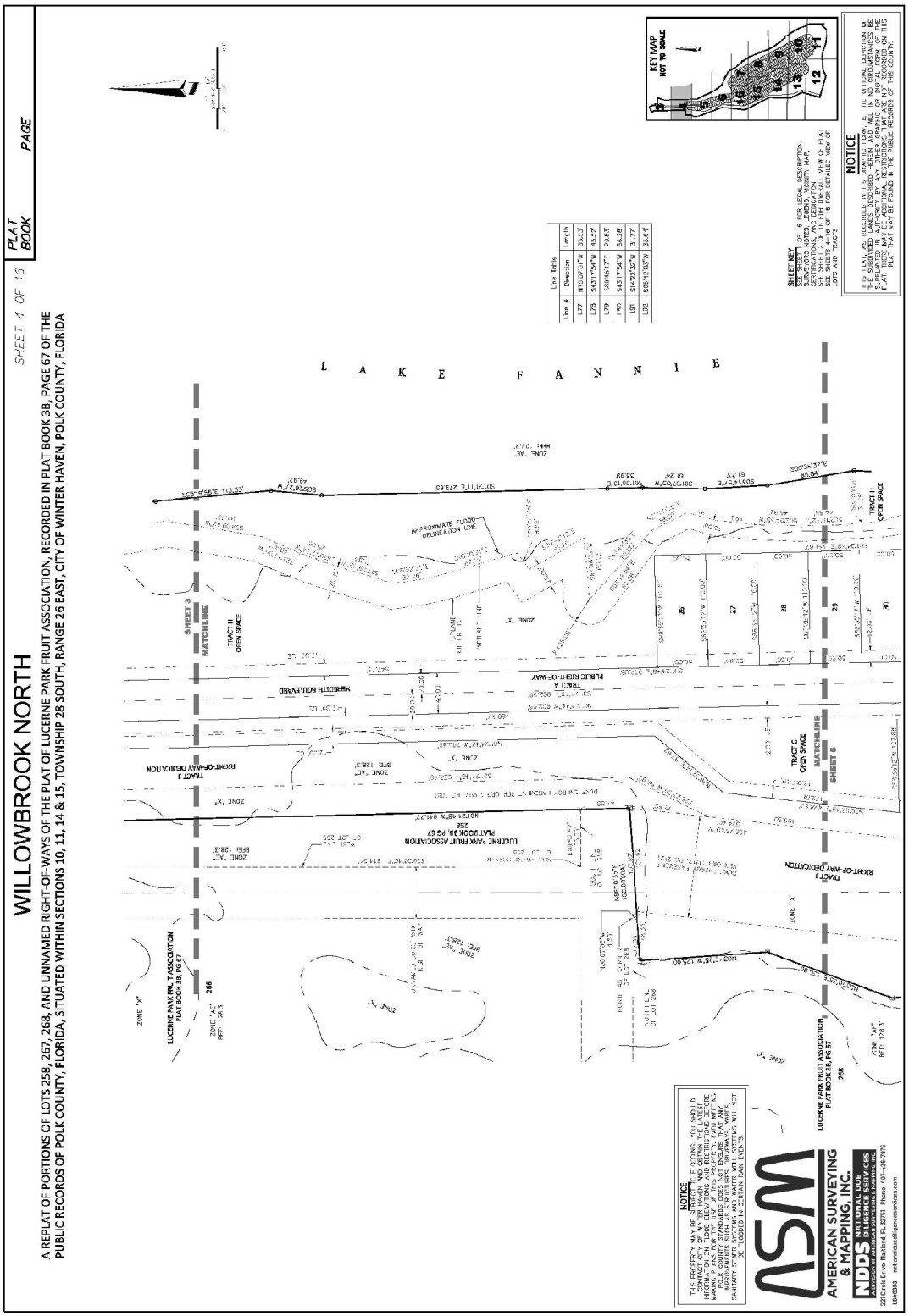

Exhibit “B”
Page 5 of 16

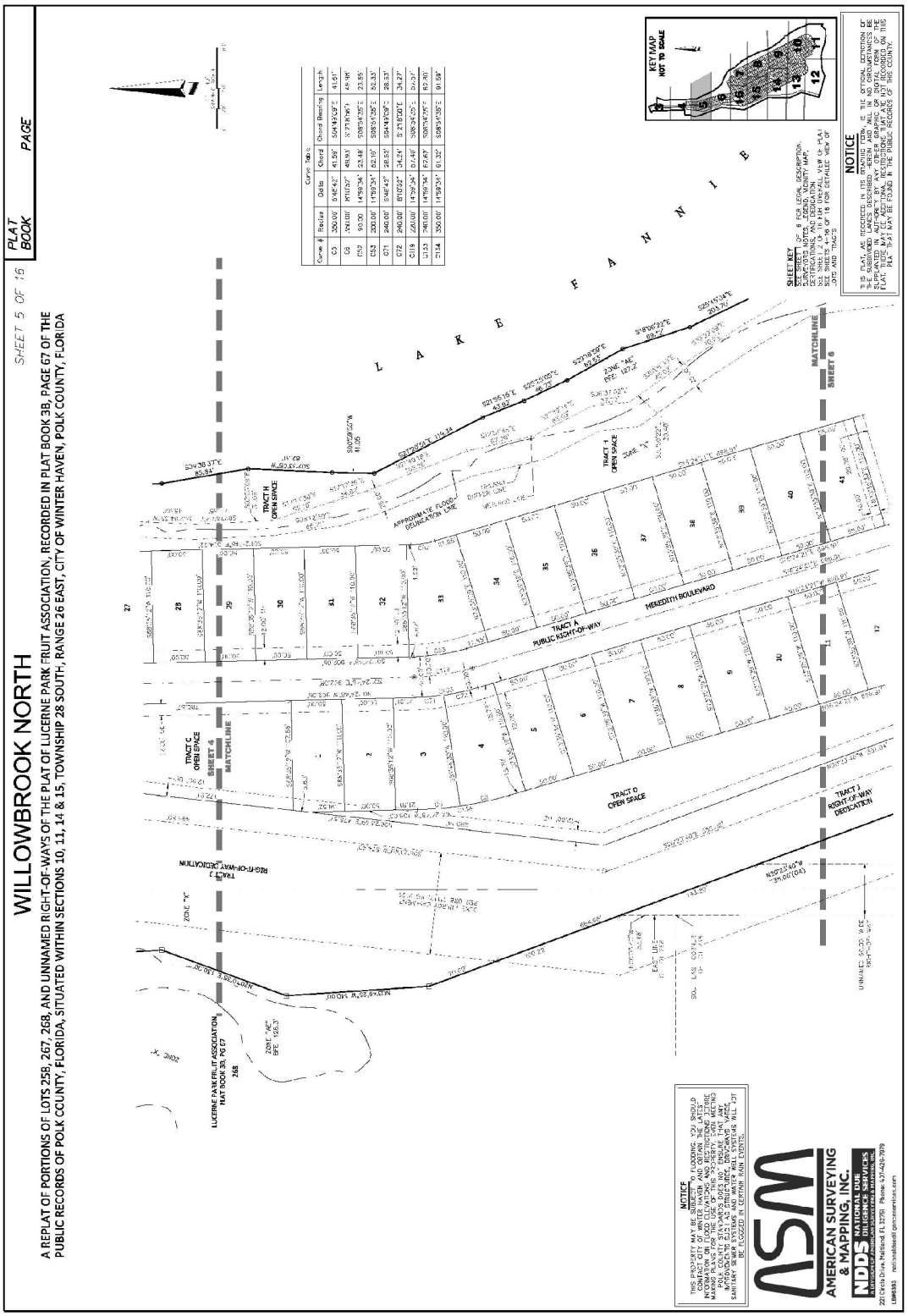

Exhibit “B”
Page 6 of 16

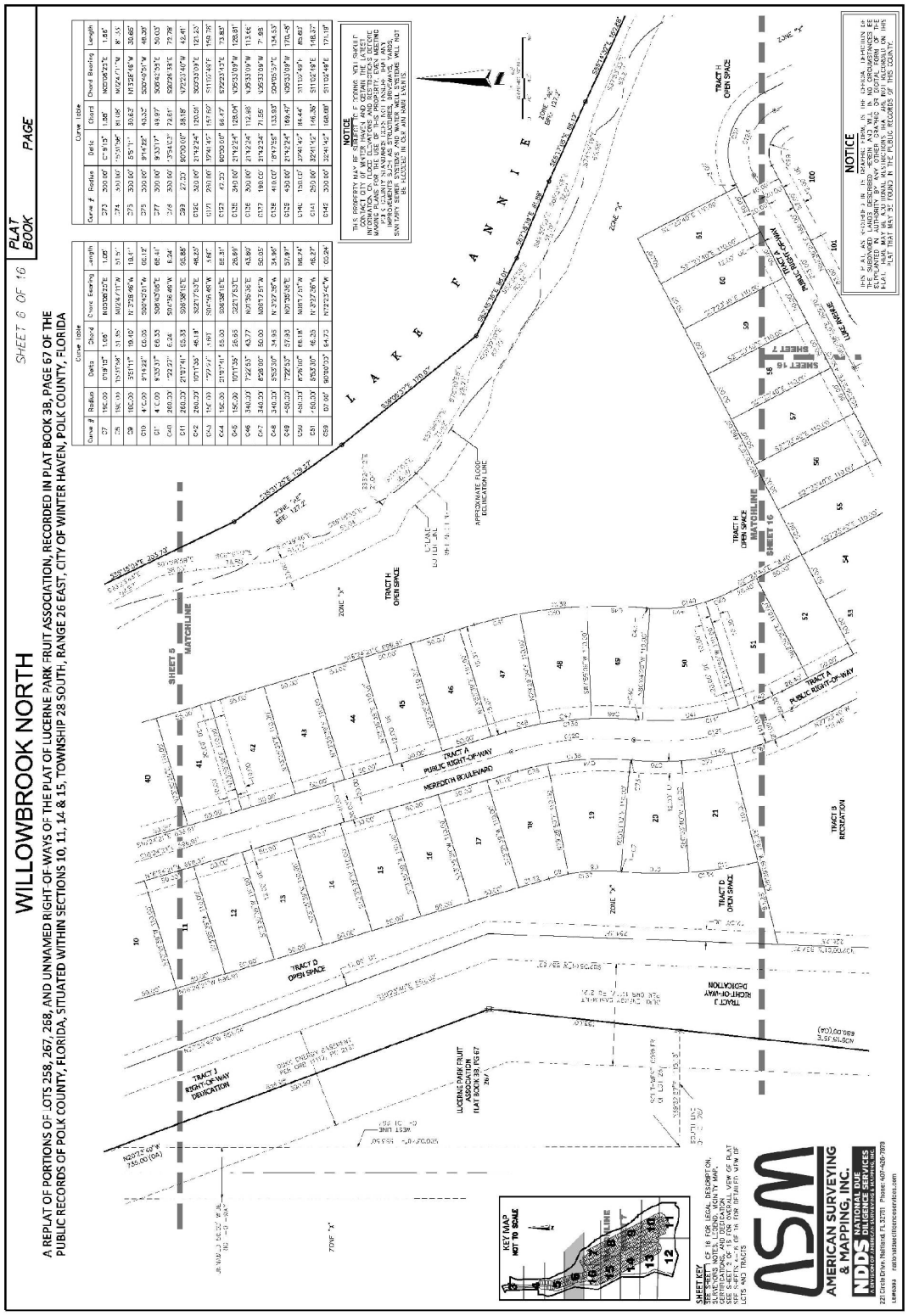

Exhibit "B"
Page 7 of 16

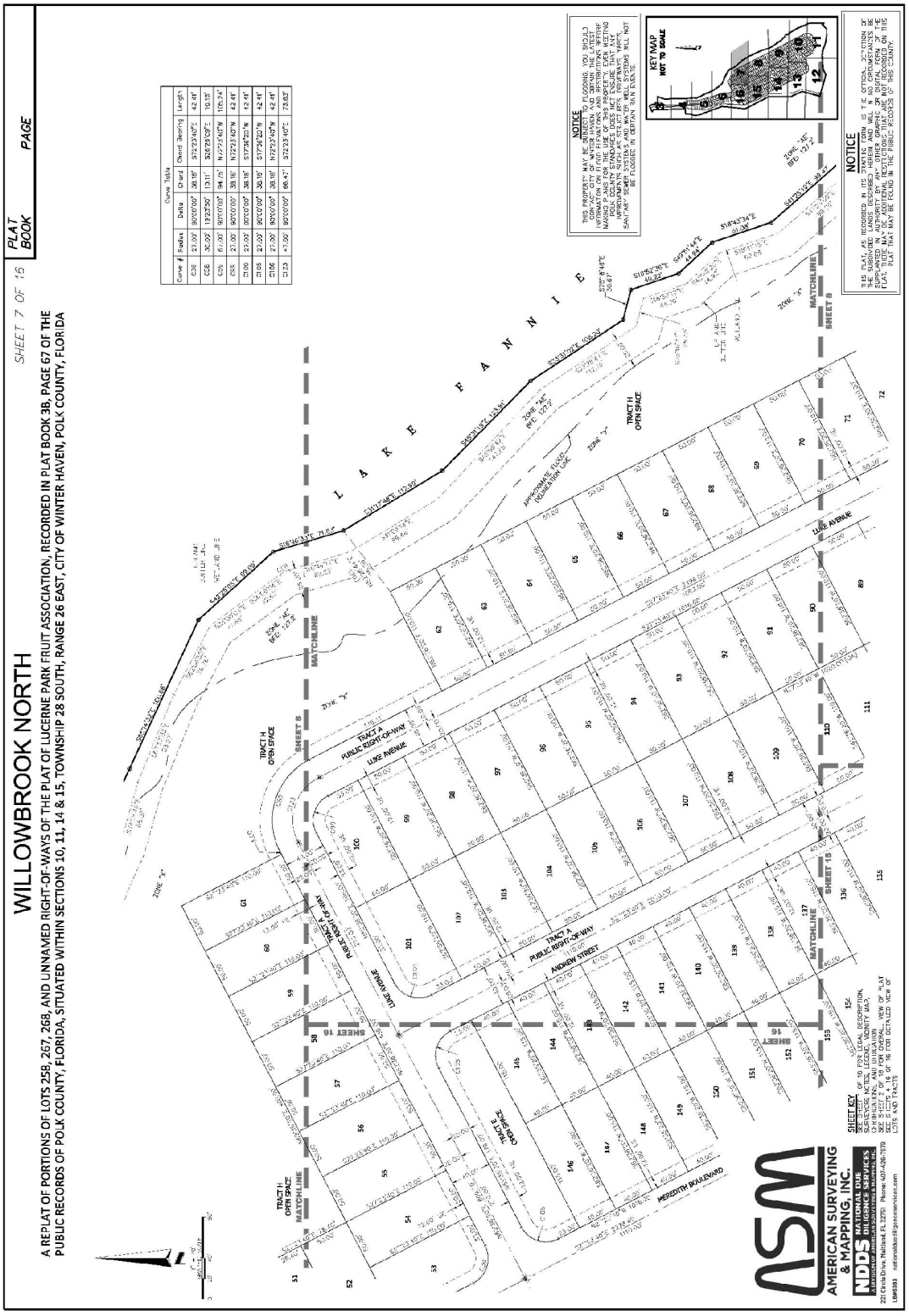

Exhibit "B"
Page 8 of 16



Exhibit "B"
Page 9 of 16

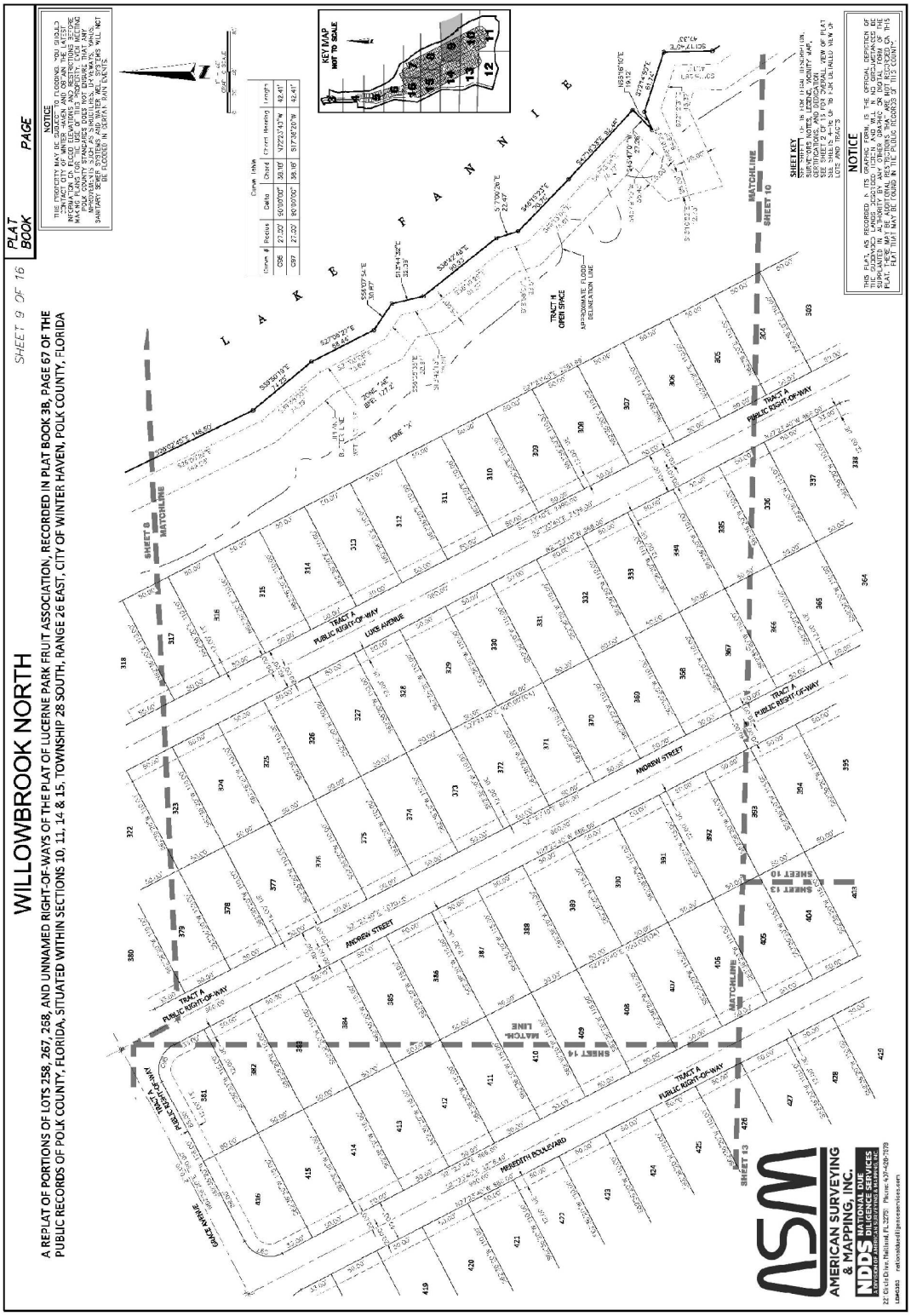

Exhibit “B”
Page 10 of 16



Exhibit "B"
Page 11 of 16

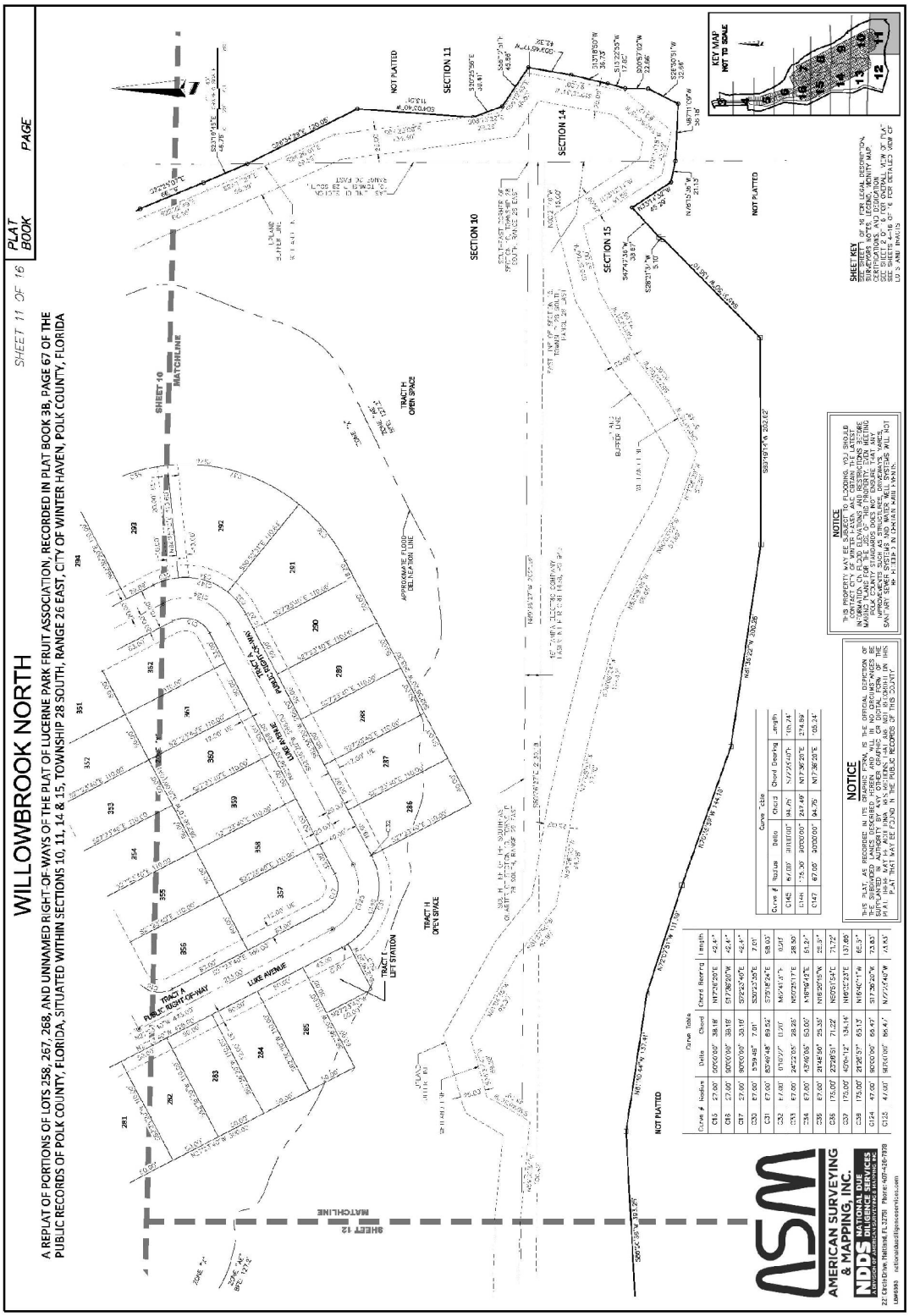

Exhibit “B”
Page 12 of 16

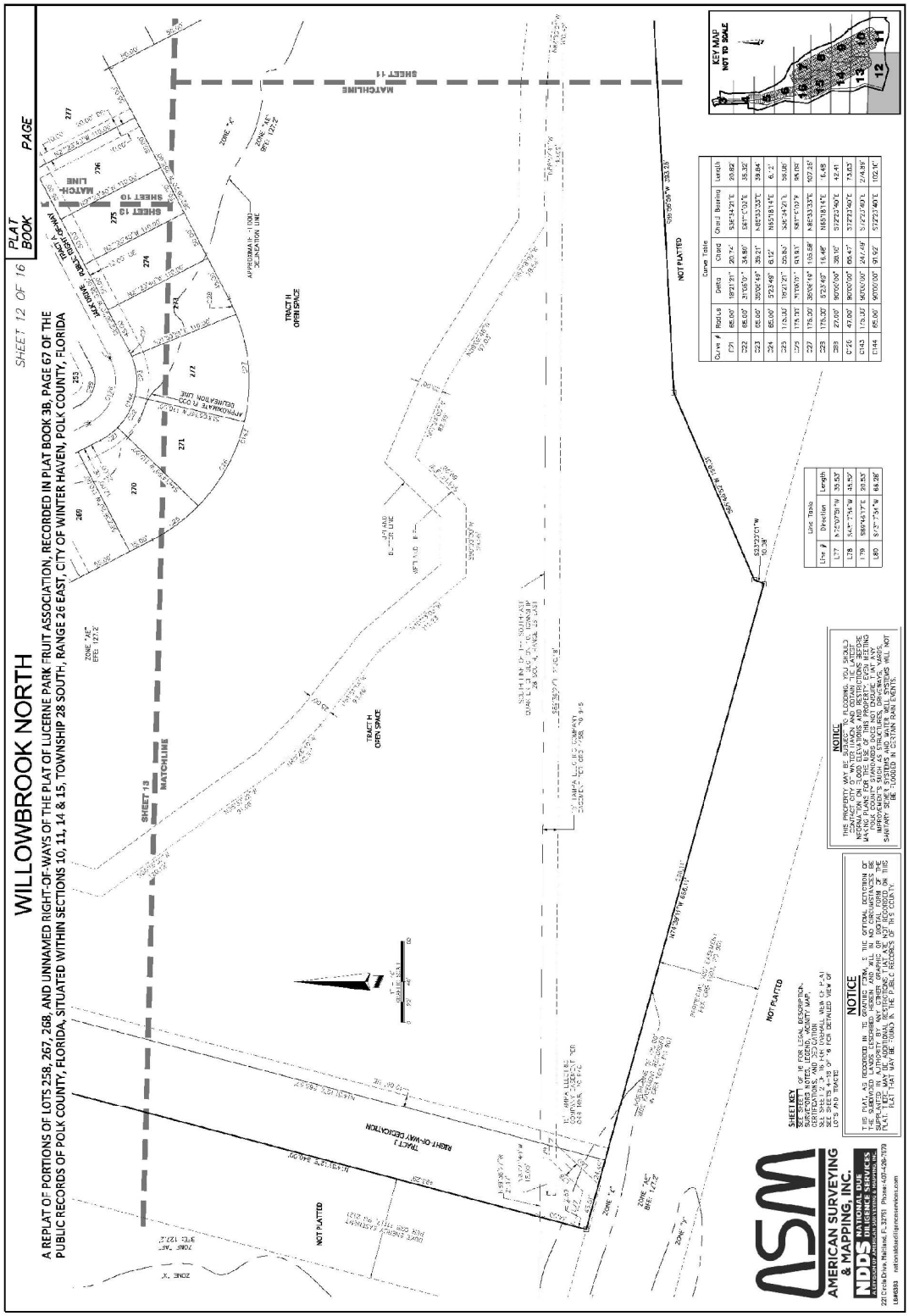

Exhibit “B”
Page 13 of 16

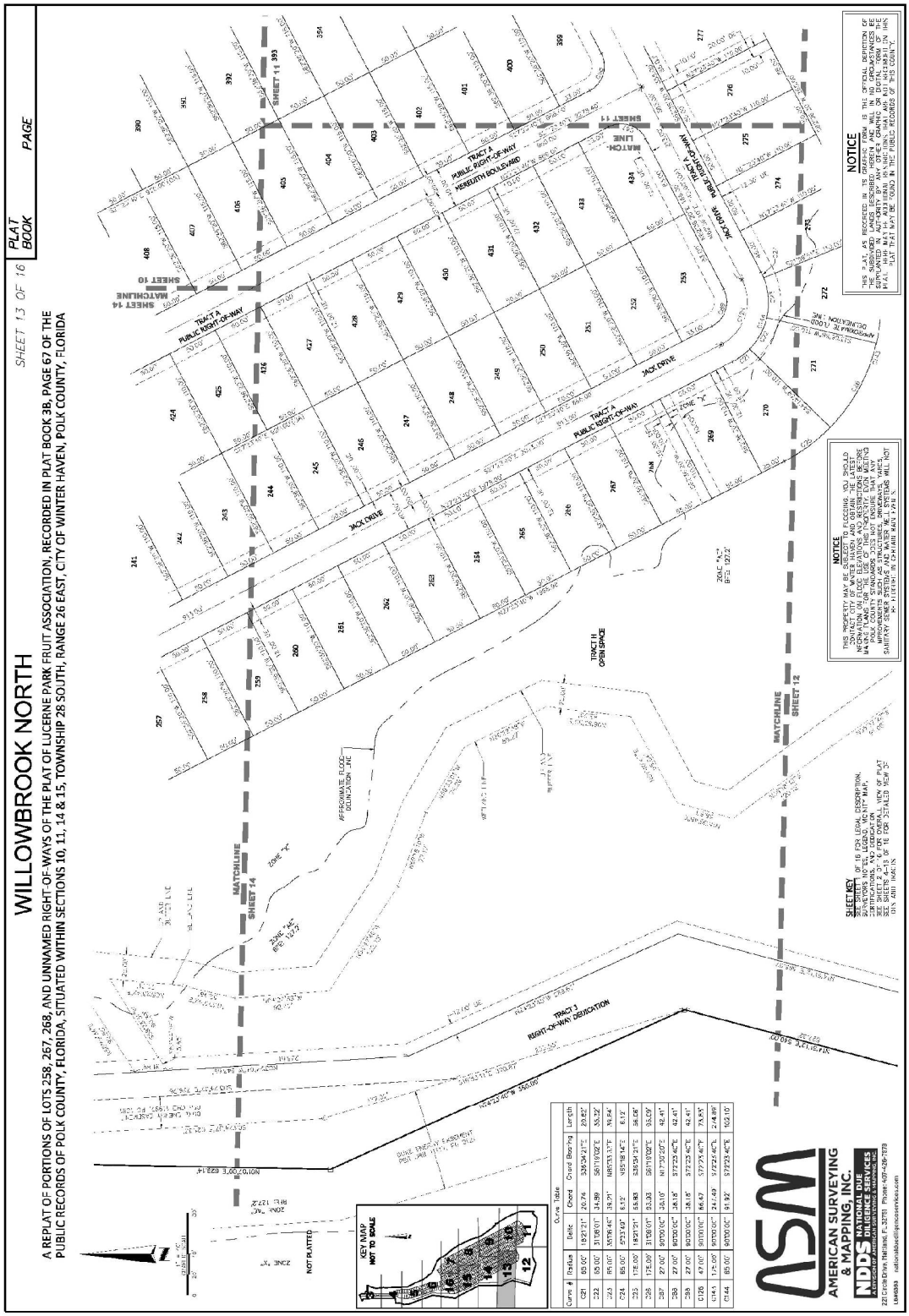

Exhibit “B”
Page 14 of 16

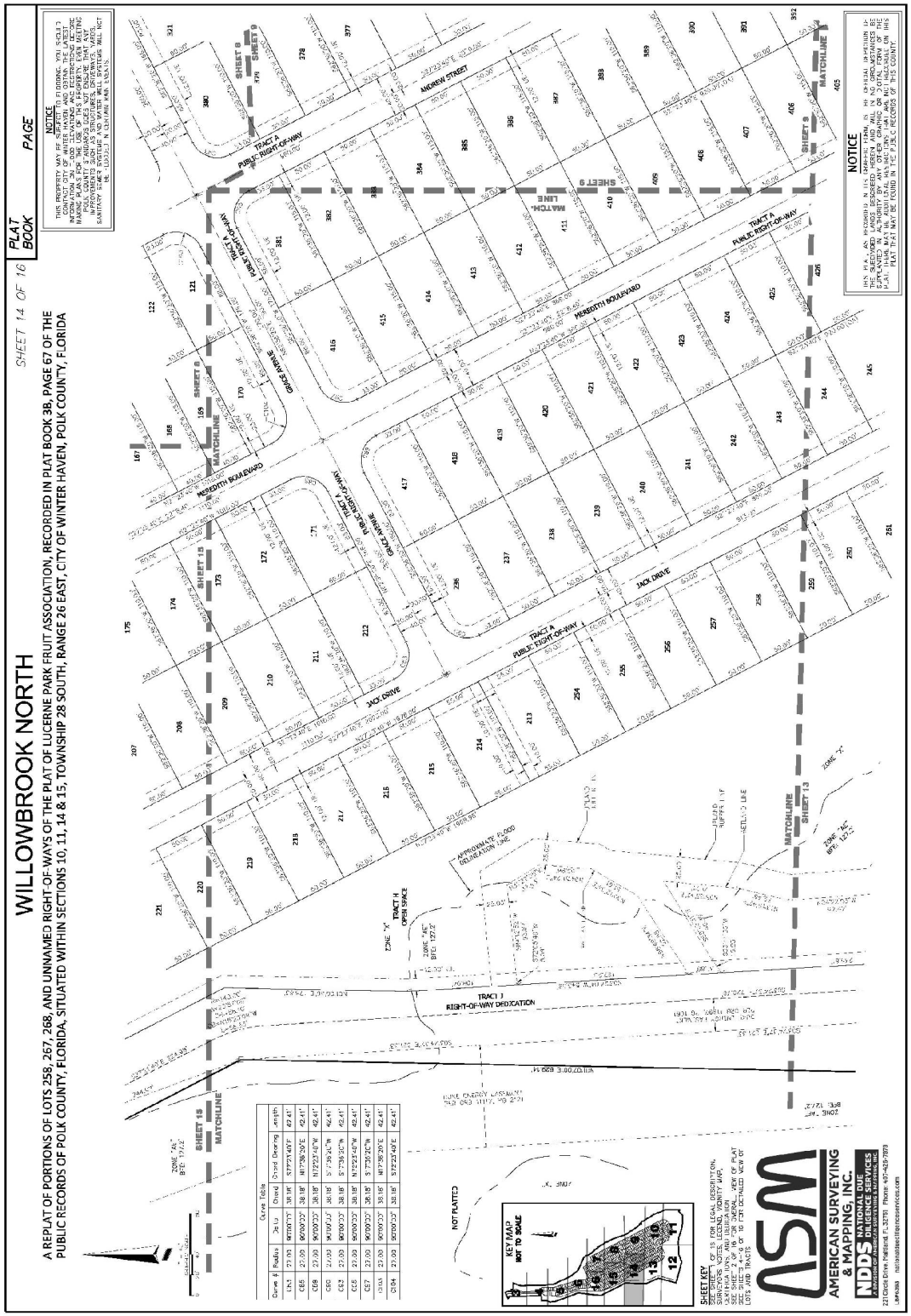

Exhibit “B”
Page 15 of 16

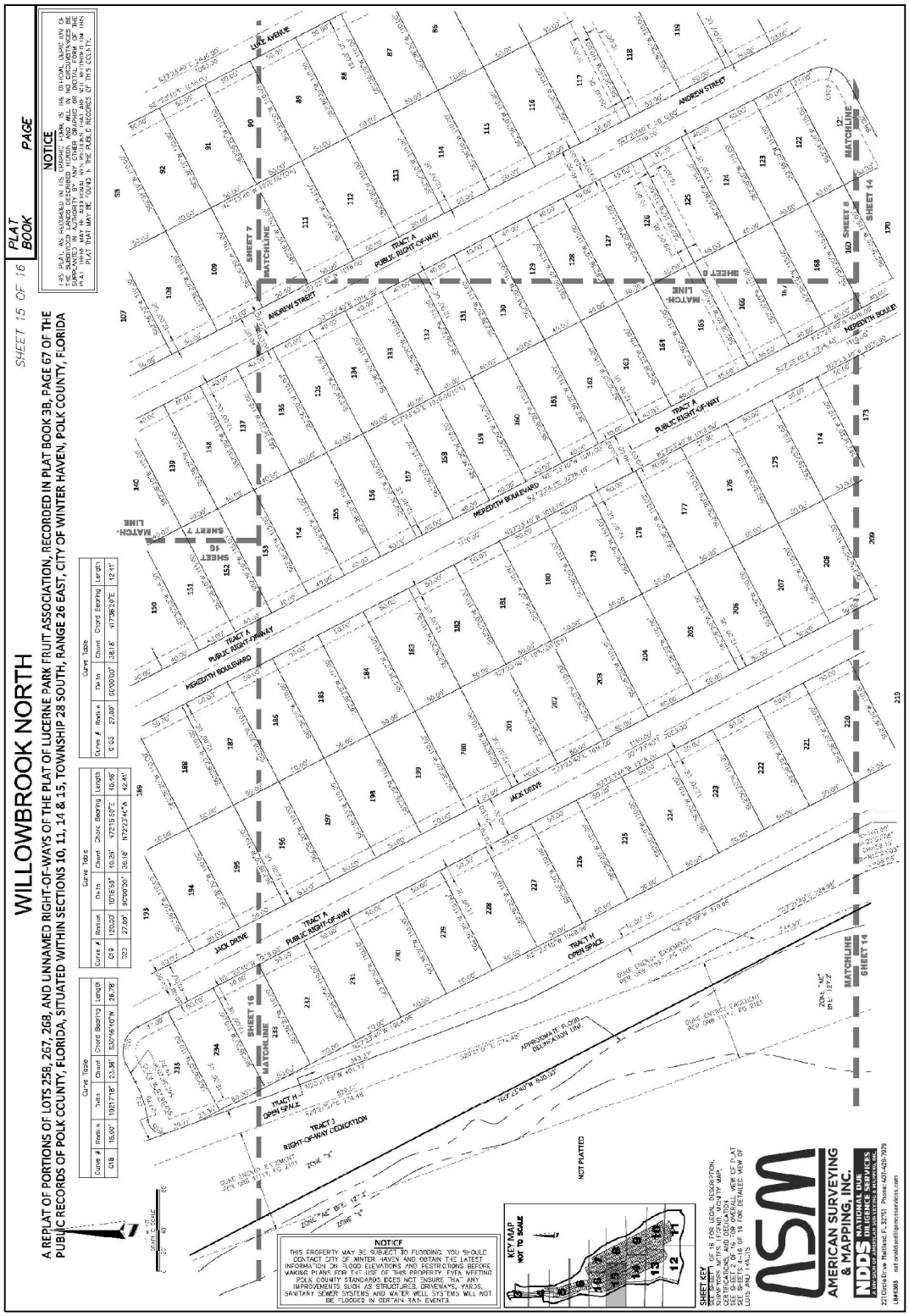

Exhibit “B”
Page 16 of 16



DATE: February 24, 2025

TO: Honorable Mayor and City Commissioners

VIA: T. Michael Stavres, City Manager
M.J. Carnevale, Deputy City Manager

FROM: Troy Heidel, Airport Director

SUBJECT: R-25-09 Approval of a Public Transportation Grant Agreement with the Florida Department of Transportation (FDOT) for Replacement of the Airport Beacon

---

BACKGROUND

Winter Haven Regional Airport is seeking approval for an Florida Department of Transportation (FDOT) grant to replace its outdated and failing airport beacon system. The existing beacons, essential for guiding pilots safely to the airport during nighttime and low-visibility conditions, have surpassed their operational lifespan. The primary beacon is over 30 years old, while the RB-4 beacon is over 22 years old, both of which are obsolete with no available replacement parts. Additionally, the green side of the beacon is currently inoperative, significantly impacting visibility, and the airport has already invested over $4,000 in repairs this year alone, with no lasting resolution.

The new project will replace the aging system with modern LED beacon technology, which provides superior visibility. By approving this grant, the airport will enhance pilot safety, ensure reliable navigation aids, and support the long-term operational efficiency of the airfield.

FINANCIAL IMPACT

The estimated cost of the project is $250,000. The Florida Department of Transportation (FDOT), through this Public Transportation Grant Agreement (PTGA), will fund 80% of the project costs, amounting to $200,000. The City is responsible for the remaining 20%, or $50,000. While these matching funds were not included in the City's FY25 budget, they are available in Fund 6301 Other Capital Improvements due to other projects coming under budget.

STRATEGIC PLAN ALIGNMENT

- Pillar: Infrastructure
- Goal: 3.2 – Take a comprehensive approach to transportation planning and maintenance of transportation assets.

RECOMMENDATION

Staff recommends the City Commission approve Resolution R-25-09 and authorize the City Manager or his designee to execute the subject Grant Agreement with the Florida Department of Transportation (FDOT), Grant No. G3982 and take all other necessary actions incidental to the implementation of same.

ATTACHMENTS

- R-25-09 with Exhibit A
- Public Transportation Grant Agreement

RESOLUTION NO. R-25-09

A RESOLUTION OF THE CITY COMMISSION OF THE CITY OF WINTER HAVEN, FLORIDA, APPROVING A PUBLIC TRANSPORTATION GRANT AGREEMENT BETWEEN THE CITY OF WINTER HAVEN AND THE FLORIDA DEPARTMENT OF TRANSPORTATION (FDOT) UNDER CONTRACT NUMBER G3982 AND FINANCIAL PROJECT NUMBER 451944-1-94-01 FOR FUNDING FOR THE REPLACEMENT OF THE ROTATING BEACON PROJECT AT THE WINTER HAVEN REGIONAL AIRPORT - GILBERT FIELD AND AUTHORIZING THE CITY MANAGER AND APPROPRIATE CITY OFFICIALS TO EXECUTE SAID AGREEMENT AND TO TAKE ALL OTHER NECESSARY ACTIONS REGARDING SAID PROJECT AND AGREEMENTS RELATED THERETO; PROVIDING FOR SEVERABILITY, CONFLICTS AND AN EFFECTIVE DATE.

WHEREAS, it is in the best interests of the residents and citizens of the City of Winter Haven for the City to enter into a Public Transportation Grant Agreement with the Florida Department of Transportation to provide funds for the design and construction of the Rotating Beacon Project at the Winter Haven Regional Airport - Gilbert Field as authorized by Chapter 332 of the Florida Statutes, in the form attached hereto as Exhibit “A” and incorporated herein by reference.

NOW, THEREFORE, BE IT RESOLVED BY THE CITY COMMISSION OF THE CITY OF WINTER HAVEN, FLORIDA:

1. The above recitals are incorporated herein and form a factual basis for the passage of this Resolution.

2. That the Public Transportation Grant Agreement with the Florida Department of Transportation under Contract Number G3982 for funding the replacement of the Rotating Beacon Project at the Winter Haven Regional Airport - Gilbert Field, under Financial Project Number 451944-1-94-01, a copy of which is attached hereto as Exhibit “A” and incorporated herein by reference, is approved.

3. That the City Manager, T. Michael Stavres, or his designee, and all other appropriate City officials are authorized to execute on behalf of the City of Winter Haven, the Public Transportation Grant Agreement under Contract Number G3982 and Financial Project Number 451944-1-94-01 with the Florida Department of Transportation for the purposes set forth hereinabove and any necessary amendments and to take all other necessary actions relating to the referenced Public Transportation Grant Agreement with FDOT and the Project.

4. The provisions of this Resolution are severable. If any word, sentence, clause, phrase or provision of this Resolution for any reason is declared by any court of competent jurisdiction to be void, unconstitutional or unenforceable, then all

remaining provisions and portions of this Resolution shall remain in full force and effect.

5. All Resolutions in conflict with this Resolution are repealed to the extent necessary to give this Resolution full force and effect.

6. This Resolution shall take effect immediately upon its passage.

INTRODUCED AND PASSED by the City Commission of the City of Winter Haven, Florida, in Regular Session, on this 10th day of March, 2025.

CITY OF WINTER HAVEN, FLORIDA

BY: _____
MAYOR - COMMISSIONER

ATTEST:

_____
CITY CLERK

Approved as to form:

_____
CITY ATTORNEY

Docusign Envelope ID: EBFDF60F-F2EE-4305-9C90-D6E520CBD296

EXHIBIT "A"
to Resolution R-25-09

STATE OF FLORIDA DEPARTMENT OF TRANSPORTATION

PUBLIC TRANSPORTATION GRANT AGREEMENT

Form 725-000-01
STRATEGIC DEVELOPMENT
OGC 10/24

Financial Project Number(s): (item-segment-phase-sequence)		Fund(s):	DPTO	FLAIR Category:	088719
451944-1-94-01		Work Activity Code/Function:	215	Object Code:	751000
		Federal Award Identification Number (FAIN) – Transit only:	N/A	Org. Code:	55012020129
Contract Number:	G3982	Federal Award Date:	N/A	Vendor Number:	VF596000453002
CFDA Number:	N/A	Agency UEI Number:			
CFDA Title:	N/A				
CSFA Number:	55.004				
CSFA Title:	Aviation Grant Program				

THIS PUBLIC TRANSPORTATION GRANT AGREEMENT ("Agreement") is entered into _____, by and between the State of Florida, Department of Transportation, ("Department"), and City of Winter Haven, ("Agency"). The Department and the Agency are sometimes referred to in this Agreement as a "Party" and collectively as the "Parties."

NOW, THEREFORE, in consideration of the mutual benefits to be derived from joint participation on the Project, the Parties agree to the following:

1. **Authority.** The Agency, by Resolution or other form of official authorization, a copy of which is attached as **Exhibit "D", Agency Resolution** and made a part of this Agreement, has authorized its officers to execute this Agreement on its behalf. The Department has the authority pursuant to Section(s) 332.007, Florida Statutes, to enter into this Agreement.

2. **Purpose of Agreement.** The purpose of this Agreement is to provide for the Department's participation in Winter Haven Airport Replace Beacon & PAPI Units, as further described in **Exhibit "A", Project Description and Responsibilities**, attached and incorporated into this Agreement ("Project"), to provide Department financial assistance to the Agency, state the terms and conditions upon which Department funds will be provided, and to set forth the manner in which the Project will be undertaken and completed.

3. **Program Area.** For identification purposes only, this Agreement is implemented as part of the Department program area selected below (select all programs that apply):

   X **Aviation**
   __ **Seaports**
   __ **Transit**
   __ **Intermodal**
   __ **Rail Crossing Closure**
   __ **Match to Direct Federal Funding** (Aviation or Transit)
   (Note: Section 15 and Exhibit G do not apply to federally matched funding)
   __ **Other**

4. **Exhibits.** The following Exhibits are attached and incorporated into this Agreement:

   X Exhibit A: Project Description and Responsibilities
   X Exhibit B: Schedule of Financial Assistance
   __ *Exhibit B1: Deferred Reimbursement Financial Provisions
   __ *Exhibit B2: Advance Payment Financial Provisions
   __ *Exhibit B3: Alternative Advanced Pay (Transit Bus Program)
   X *Exhibit C: Terms and Conditions of Construction
   X Exhibit D: Agency Resolution
   X Exhibit E: Program Specific Terms and Conditions
   X Exhibit E1: Prohibition Based on Health Care Choices
   __ Exhibit E2: Exterior Vehicle Wrap, Tinting, Paint, Marketing and Advertising (Transit)

X Exhibit F: Contract Payment Requirements
X *Exhibit G: Audit Requirements for Awards of State Financial Assistance
__ *Exhibit H: Audit Requirements for Awards of Federal Financial Assistance
__ *Exhibit I: Certification of Disbursement of Payment to Vehicle and/or Equipment Vendor
__ *Additional Exhibit(s):

*Indicates that the Exhibit is only attached and incorporated if applicable box is selected.

5. **Time.** Unless specified otherwise, all references to "days" within this Agreement refer to calendar days.

6. **Term of Agreement.** This Agreement shall commence upon full execution by both Parties ("Effective Date") and continue through June 30, 2026. If the Agency does not complete the Project within this time period, this Agreement will expire unless an extension of the time period is requested by the Agency and granted in writing by the Department prior to the expiration of this Agreement. Expiration of this Agreement will be considered termination of the Project. The cost of any work performed prior to the Effective Date or after the expiration date of this Agreement will not be reimbursed by the Department.

   a. __ If this box is checked the following provision applies:

   Unless terminated earlier, work on the Project shall commence no later than the __ day of __, or within __ days of the issuance of the Notice to Proceed for the construction phase of the Project (if the Project involves construction), whichever date is earlier. The Department shall have the option to immediately terminate this Agreement should the Agency fail to meet the above-required dates.

7. **Amendments, Extensions, and Assignment.** This Agreement may be amended or extended upon mutual written agreement of the Parties. This Agreement shall not be renewed. This Agreement shall not be assigned, transferred, or otherwise encumbered by the Agency under any circumstances without the prior written consent of the Department.

8. **Termination or Suspension of Project.** The Department may, by written notice to the Agency, suspend any or all of the Department's obligations under this Agreement for the Agency's failure to comply with applicable law or the terms of this Agreement until such time as the event or condition resulting in such suspension has ceased or been corrected.

   a. Notwithstanding any other provision of this Agreement, if the Department intends to terminate the Agreement, the Department shall notify the Agency of such termination in writing at least thirty (30) days prior to the termination of the Agreement, with instructions to the effective date of termination or specify the stage of work at which the Agreement is to be terminated.

   b. The Parties to this Agreement may terminate this Agreement when its continuation would not produce beneficial results commensurate with the further expenditure of funds. In this event, the Parties shall agree upon the termination conditions.

   c. If the Agreement is terminated before performance is completed, the Agency shall be paid only for that work satisfactorily performed for which costs can be substantiated. Such payment, however, may not exceed the equivalent percentage of the Department's maximum financial assistance. If any portion of the Project is located on the Department's right-of-way, then all work in progress on the Department right-of-way will become the property of the Department and will be turned over promptly by the Agency.

   d. In the event the Agency fails to perform or honor the requirements and provisions of this Agreement, the Agency shall promptly refund in full to the Department within thirty (30) days of the termination of the Agreement any funds that were determined by the Department to have been expended in violation of the Agreement.

e. The Department reserves the right to unilaterally cancel this Agreement for failure by the Agency to comply with the Public Records provisions of Chapter 119, Florida Statutes.

9. Project Cost:

a. The estimated total cost of the Project is $250,000. This amount is based upon **Exhibit "B", Schedule of Financial Assistance**. The timeline for deliverables and distribution of estimated amounts between deliverables within a grant phase, as outlined in **Exhibit "B", Schedule of Financial Assistance**, may be modified by mutual written agreement of the Parties and does not require execution of an **Amendment to the Public Transportation Grant Agreement**. The timeline for deliverables and distribution of estimated amounts between grant phases requires an amendment executed by both Parties in the same form as this Agreement.

b. The Department agrees to participate in the Project cost up to the maximum amount of $200,000 and, the Department's participation in the Project shall not exceed 80.00% of the total eligible cost of the Project, and as more fully described in **Exhibit "B'', Schedule of Financial Assistance**. The Agency agrees to bear all expenses in excess of the amount of the Department's participation and any cost overruns or deficits involved.

10. Compensation and Payment:

a. Eligible Cost. The Department shall reimburse the Agency for allowable costs incurred as described in **Exhibit "A"**, **Project Description and Responsibilities**, and as set forth in **Exhibit "B", Schedule of Financial Assistance**.

b. Deliverables. The Agency shall provide quantifiable, measurable, and verifiable units of deliverables. Each deliverable must specify the required minimum level of service to be performed and the criteria for evaluating successful completion. The Project and the quantifiable, measurable, and verifiable units of deliverables are described more fully in **Exhibit "A", Project Description and Responsibilities**. Modifications to the deliverables in **Exhibit "A", Project Description and Responsibilities** requires a formal written amendment.

c. Invoicing. Invoices shall be submitted no more often than monthly by the Agency in detail sufficient for a proper pre-audit and post-audit, based on the quantifiable, measurable, and verifiable deliverables as established in **Exhibit "A", Project Description and Responsibilities**. Deliverables and costs incurred must be received and approved by the Department prior to reimbursement. Requests for reimbursement by the Agency shall include an invoice, progress report, and supporting documentation for the deliverables being billed that are acceptable to the Department. The Agency shall use the format for the invoice and progress report that is approved by the Department.

d. Supporting Documentation. Supporting documentation must establish that the deliverables were received and accepted in writing by the Agency and must also establish that the required minimum standards or level of service to be performed based on the criteria for evaluating successful completion as specified in **Exhibit "A", Project Description and Responsibilities** has been met. All costs invoiced shall be supported by properly executed payrolls, time records, invoices, contracts, or vouchers evidencing in proper detail the nature and propriety of charges as described in **Exhibit "F", Contract Payment Requirements**.

e. Travel Expenses. The selected provision below is controlling regarding travel expenses:

X Travel expenses are NOT eligible for reimbursement under this Agreement.

__ Travel expenses ARE eligible for reimbursement under this Agreement. Bills for travel expenses specifically authorized in this Agreement shall be submitted on the Department's

Contractor Travel Form No. 300-000-06 and will be paid in accordance with Section 112.061, Florida Statutes, and the most current version of the Department's Disbursement Handbook for Employees and Managers.

f. **Financial Consequences.** Payment shall be made only after receipt and approval of deliverables and costs incurred unless advance payments are authorized by the Chief Financial Officer of the State of Florida under Chapters 215 and 216, Florida Statutes, or the Department's Comptroller under Section 334.044(29), Florida Statutes. If the Department determines that the performance of the Agency is unsatisfactory, the Department shall notify the Agency of the deficiency to be corrected, which correction shall be made within a time-frame to be specified by the Department. The Agency shall, within thirty (30) days after notice from the Department, provide the Department with a corrective action plan describing how the Agency will address all issues of contract non-performance, unacceptable performance, failure to meet the minimum performance levels, deliverable deficiencies, or contract non-compliance. If the corrective action plan is unacceptable to the Department, the Agency will not be reimbursed. If the deficiency is subsequently resolved, the Agency may bill the Department for the amount that was previously not reimbursed during the next billing period. If the Agency is unable to resolve the deficiency, the funds shall be forfeited at the end of the Agreement's term.

g. **Invoice Processing**. An Agency receiving financial assistance from the Department should be aware of the following time frames. Inspection or verification and approval of deliverables shall take no longer than 20 days from the Department's receipt of the invoice. The Department has 20 days to deliver a request for payment (voucher) to the Department of Financial Services. The 20 days are measured from the latter of the date the invoice is received or the deliverables are received, inspected or verified, and approved.

   If a payment is not available within 40 days, a separate interest penalty at a rate as established pursuant to Section 55.03(1), Florida Statutes, will be due and payable, in addition to the invoice amount, to the Agency. Interest penalties of less than one (1) dollar will not be enforced unless the Agency requests payment. Invoices that have to be returned to an Agency because of Agency preparation errors will result in a delay in the payment. The invoice payment requirements do not start until a properly completed invoice is provided to the Department.

   A Vendor Ombudsman has been established within the Department of Financial Services. The duties of this individual include acting as an advocate for Agency who may be experiencing problems in obtaining timely payment(s) from a state agency. The Vendor Ombudsman may be contacted at (850) 413-5516.

h. **Records Retention.** The Agency shall maintain an accounting system or separate accounts to ensure funds and projects are tracked separately. Records of costs incurred under the terms of this Agreement shall be maintained and made available upon request to the Department at all times during the period of this Agreement and for five years after final payment is made. Copies of these records shall be furnished to the Department upon request. Records of costs incurred include the Agency's general accounting records and the Project records, together with supporting documents and records, of the Contractor and all subcontractors performing work on the Project, and all other records of the Contractor and subcontractors considered necessary by the Department for a proper audit of costs.

i. **Progress Reports.** Upon request, the Agency agrees to provide progress reports to the Department in the standard format used by the Department and at intervals established by the Department. The Department will be entitled at all times to be advised, at its request, as to the status of the Project and of details thereof.

j. Submission of Other Documents. The Agency shall submit to the Department such data, reports, records, contracts, and other documents relating to the Project as the Department may require as listed in **Exhibit "E", Program Specific Terms and Conditions** attached to and incorporated into this Agreement.

k. Offsets for Claims. If, after Project completion, any claim is made by the Department resulting from an audit or for work or services performed pursuant to this Agreement, the Department may offset such amount from payments due for work or services done under any agreement that it has with the Agency owing such amount if, upon written demand, payment of the amount is not made within 60 days to the Department. Offsetting any amount pursuant to this paragraph shall not be considered a breach of contract by the Department.

l. Final Invoice. The Agency must submit the final invoice on the Project to the Department within 120 days after the completion of the Project. Invoices submitted after the 120-day time period may not be paid.

m. Department's Performance and Payment Contingent Upon Annual Appropriation by the Legislature. The Department's performance and obligation to pay under this Agreement is contingent upon an annual appropriation by the Legislature. If the Department's funding for this Project is in multiple fiscal years, a notice of availability of funds from the Department's project manager must be received prior to costs being incurred by the Agency. See **Exhibit "B", Schedule of Financial Assistance** for funding levels by fiscal year. Project costs utilizing any fiscal year funds are not eligible for reimbursement if incurred prior to funds approval being received. The Department will notify the Agency, in writing, when funds are available.

n. Limits on Contracts Exceeding $25,000 and Term more than 1 Year. In the event this Agreement is in excess of $25,000 and has a term for a period of more than one year, the provisions of Section 339.135(6)(a), Florida Statutes, are hereby incorporated:

> "The Department, during any fiscal year, shall not expend money, incur any liability, or enter into any contract which, by its terms, involves the expenditure of money in excess of the amounts budgeted as available for expenditure during such fiscal year. Any contract, verbal or written, made in violation of this subsection is null and void, and no money may be paid on such contract. The Department shall require a statement from the comptroller of the Department that funds are available prior to entering into any such contract or other binding commitment of funds. Nothing herein contained shall prevent the making of contracts for periods exceeding 1 year, but any contract so made shall be executory only for the value of the services to be rendered or agreed to be paid for in succeeding fiscal years; and this paragraph shall be incorporated verbatim in all contracts of the Department which are for an amount in excess of $25,000 and which have a term for a period of more than 1 year."

o. Agency Obligation to Refund Department. Any Project funds made available by the Department pursuant to this Agreement that are determined by the Department to have been expended by the Agency in violation of this Agreement or any other applicable law or regulation shall be promptly refunded in full to the Department. Acceptance by the Department of any documentation or certifications, mandatory or otherwise permitted, that the Agency files shall not constitute a waiver of the Department's rights as the funding agency to verify all information at a later date by audit or investigation.

p. Non-Eligible Costs. In determining the amount of the payment, the Department will exclude all Project costs incurred by the Agency prior to the execution of this Agreement, costs incurred after the expiration of the Agreement, costs that are not provided for in **Exhibit "A"**, **Project**

Description and Responsibilities, and as set forth in **Exhibit "B", Schedule of Financial Assistance**, costs agreed to be borne by the Agency or its contractors and subcontractors for not meeting the Project commencement and final invoice time lines, and costs attributable to goods or services received under a contract or other arrangement that has not been approved in writing by the Department. Specific unallowable costs may be listed in **Exhibit "A"**, **Project Description and Responsibilities.**

11. **General Requirements.** The Agency shall complete the Project with all practical dispatch in a sound, economical, and efficient manner, and in accordance with the provisions in this Agreement and all applicable laws.

    a. **Necessary Permits Certification.** The Agency shall certify to the Department that the Agency's design consultant and/or construction contractor has secured the necessary permits.

    b. **Right-of-Way Certification.** If the Project involves construction, then the Agency shall provide to the Department certification and a copy of appropriate documentation substantiating that all required right-of-way necessary for the Project has been obtained. Certification is required prior to authorization for advertisement for or solicitation of bids for construction of the Project, even if no right-of-way is required.

    c. **Notification Requirements When Performing Construction on Department's Right-of-Way.** In the event the cost of the Project is greater than $250,000.00, and the Project involves construction on the Department's right-of-way, the Agency shall provide the Department with written notification of either its intent to:

        i. Require the construction work of the Project that is on the Department's right-of-way to be performed by a Department prequalified contractor, or

        ii. Construct the Project utilizing existing Agency employees, if the Agency can complete said Project within the time frame set forth in this Agreement.

    d. __ If this box is checked, then the Agency is permitted to utilize its own forces and the following provision applies: **Use of Agency Workforce.** In the event the Agency proceeds with any phase of the Project utilizing its own forces, the Agency will only be reimbursed for direct costs (this excludes general overhead).

    e. __ If this box is checked, then the Agency is permitted to utilize **Indirect Costs: Reimbursement for Indirect Program Expenses** (select one):

        i. __ Agency has selected to seek reimbursement from the Department for actual indirect expenses (no rate).

        ii. __ Agency has selected to apply a de minimus rate of 10% to modified total direct costs. Note: The de minimus rate is available only to entities that have never had a negotiated indirect cost rate. When selected, the de minimus rate must be used consistently for all federal awards until such time the agency chooses to negotiate a rate. A cost policy statement and de minimis certification form must be submitted to the Department for review and approval.

        iii. __ Agency has selected to apply a state or federally approved indirect cost rate. A federally approved rate agreement or indirect cost allocation plan (ICAP) must be submitted annually.

    f. **Agency Compliance with Laws, Rules, and Regulations, Guidelines, and Standards.** The Agency shall comply and require its contractors and subcontractors to comply with all terms

and conditions of this Agreement and all federal, state, and local laws and regulations applicable to this Project.

g. **Claims and Requests for Additional Work.** The Agency shall have the sole responsibility for resolving claims and requests for additional work for the Project. The Agency will make best efforts to obtain the Department's input in its decisions. The Department is not obligated to reimburse for claims or requests for additional work.

12. Contracts of the Agency:

a. **Approval of Third Party Contracts.** The Department specifically reserves the right to review and approve any and all third party contracts with respect to the Project before the Agency executes or obligates itself in any manner requiring the disbursement of Department funds, including consultant and purchase of commodities contracts, or amendments thereto. If the Department chooses to review and approve third party contracts for this Project and the Agency fails to obtain such approval, that shall be sufficient cause for nonpayment by the Department. The Department specifically reserves unto itself the right to review the qualifications of any consultant or contractor and to approve or disapprove the employment of the same. If Federal Transit Administration (FTA) funds are used in the Project, the Department must exercise the right to third party contract review.

b. **Procurement of Commodities or Contractual Services.** It is understood and agreed by the Parties hereto that participation by the Department in a project with the Agency, where said project involves the purchase of commodities or contractual services where purchases or costs exceed the Threshold Amount for CATEGORY TWO per Section 287.017, Florida Statutes, is contingent on the Agency complying in full with the provisions of Section 287.057, Florida Statutes. The Agency's Authorized Official shall certify to the Department that the Agency's purchase of commodities or contractual services has been accomplished in compliance with Section 287.057, Florida Statutes. It shall be the sole responsibility of the Agency to ensure that any obligations made in accordance with this Section comply with the current threshold limits. Contracts, purchase orders, task orders, construction change orders, or any other agreement that would result in exceeding the current budget contained in **Exhibit "B", Schedule of Financial Assistance**, or that is not consistent with the Project description and scope of services contained in **Exhibit "A", Project Description and Responsibilities** must be approved by the Department prior to Agency execution. Failure to obtain such approval, and subsequent execution of an amendment to the Agreement if required, shall be sufficient cause for nonpayment by the Department, in accordance with this Agreement.

c. **Consultants' Competitive Negotiation Act.** It is understood and agreed by the Parties to this Agreement that participation by the Department in a project with the Agency, where said project involves a consultant contract for professional services, is contingent on the Agency's full compliance with provisions of Section 287.055, Florida Statutes, Consultants' Competitive Negotiation Act. In all cases, the Agency's Authorized Official shall certify to the Department that selection has been accomplished in compliance with the Consultants' Competitive Negotiation Act.

d. **Disadvantaged Business Enterprise (DBE) Policy and Obligation.** It is the policy of the Department that DBEs, as defined in 49 C.F.R. Part 26, as amended, shall have the opportunity to participate in the performance of contracts financed in whole or in part with Department funds under this Agreement. The DBE requirements of applicable federal and state laws and regulations apply to this Agreement. The Agency and its contractors agree to ensure that DBEs have the opportunity to participate in the performance of this Agreement. In this regard, all recipients and contractors shall take all necessary and reasonable steps in accordance with applicable federal and state laws and regulations to ensure that the DBEs have the opportunity to compete for and perform contracts. The Agency and its contractors

and subcontractors shall not discriminate on the basis of race, color, national origin or sex in the award and performance of contracts, entered pursuant to this Agreement.

13. **Maintenance Obligations.** In the event the Project includes construction or the acquisition of commodities then the following provisions are incorporated into this Agreement:

    a. The Agency agrees to accept all future maintenance and other attendant costs occurring after completion of the Project for all improvements constructed or commodities acquired as part of the Project. The terms of this provision shall survive the termination of this Agreement.

14. **Sale, Transfer, or Disposal of Department-funded Property:**

    a. The Agency will not sell or otherwise transfer or dispose of any part of its title or other interests in real property, facilities, or equipment funded in any part by the Department under this Agreement without prior written approval by the Department.

    b. If a sale, transfer, or disposal by the Agency of all or a portion of Department-funded real property, facilities, or equipment is approved by the Department, the following provisions will apply:

        i. The Agency shall reimburse the Department a proportional amount of the proceeds of the sale of any Department-funded property.

        ii. The proportional amount shall be determined on the basis of the ratio of the Department funding of the development or acquisition of the property multiplied against the sale amount, and shall be remitted to the Department within ninety (90) days of closing of sale.

        iii. Sale of property developed or acquired with Department funds shall be at market value as determined by appraisal or public bidding process, and the contract and process for sale must be approved in advance by the Department.

        iv. If any portion of the proceeds from the sale to the Agency are non-cash considerations, reimbursement to the Department shall include a proportional amount based on the value of the non-cash considerations.

    c. The terms of provisions “a” and “b” above shall survive the termination of this Agreement.

        i. The terms shall remain in full force and effect throughout the useful life of facilities developed, equipment acquired, or Project items installed within a facility, but shall not exceed twenty (20) years from the effective date of this Agreement.

        ii. There shall be no limit on the duration of the terms with respect to real property acquired with Department funds.

15. **Single Audit.** The administration of Federal or State resources awarded through the Department to the Agency by this Agreement may be subject to audits and/or monitoring by the Department. The following requirements do not limit the authority of the Department to conduct or arrange for the conduct of additional audits or evaluations of Federal awards or State financial assistance or limit the authority of any state agency inspector general, the State of Florida Auditor General, or any other state official. The Agency shall comply with all audit and audit reporting requirements as specified below.

    Federal Funded:

    a. In addition to reviews of audits conducted in accordance with 2 CFR Part 200, Subpart F – Audit Requirements, monitoring procedures may include but not be limited to on-site visits by

Department staff and/or other procedures, including reviewing any required performance and financial reports, following up, ensuring corrective action, and issuing management decisions on weaknesses found through audits when those findings pertain to Federal awards provided through the Department by this Agreement. By entering into this Agreement, the Agency agrees to comply and cooperate fully with any monitoring procedures/processes deemed appropriate by the Department. The Agency further agrees to comply and cooperate with any inspections, reviews, investigations, or audits deemed necessary by the Department, State of Florida Chief Financial Officer (CFO), or State of Florida Auditor General.

b. The Agency, a non-Federal entity as defined by 2 CFR Part 200, Subpart F – Audit Requirements, as a subrecipient of a Federal award awarded by the Department through this Agreement, is subject to the following requirements:

i. In the event the Agency expends a total amount of Federal awards equal to or in excess of the threshold established by 2 CFR Part 200, Subpart F – Audit Requirements, the Agency must have a Federal single or program-specific audit conducted for such fiscal year in accordance with the provisions of 2 CFR Part 200, Subpart F – Audit Requirements. **Exhibit "H", Audit Requirements for Awards of Federal Financial Assistance**, to this Agreement provides the required Federal award identification information needed by the Agency to further comply with the requirements of 2 CFR Part 200, Subpart F – Audit Requirements. In determining Federal awards expended in a fiscal year, the Agency must consider all sources of Federal awards based on when the activity related to the Federal award occurs, including the Federal award provided through the Department by this Agreement. The determination of amounts of Federal awards expended should be in accordance with the guidelines established by 2 CFR Part 200, Subpart F – Audit Requirements. An audit conducted by the State of Florida Auditor General in accordance with the provisions of 2 CFR Part 200, Subpart F – Audit Requirements, will meet the requirements of this part.

ii. In connection with the audit requirements, the Agency shall fulfill the requirements relative to the auditee responsibilities as provided in 2 CFR Part 200, Subpart F – Audit Requirements.

iii. In the event the Agency expends less than the threshold established by 2 CFR Part 200, Subpart F – Audit Requirements, in Federal awards, the Agency is exempt from Federal audit requirements for that fiscal year. However, the Agency must provide a single audit exemption statement to the Department at FDOTSingleAudit@dot.state.fl.us no later than nine months after the end of the Agency's audit period for each applicable audit year. In the event the Agency expends less than the threshold established by 2 CFR Part 200, Subpart F – Audit Requirements, in Federal awards in a fiscal year and elects to have an audit conducted in accordance with the provisions of 2 CFR Part 200, Subpart F – Audit Requirements, the cost of the audit must be paid from non-Federal resources (*i.e.*, the cost of such an audit must be paid from the Agency's resources obtained from other than Federal entities).

iv. The Agency must electronically submit to the Federal Audit Clearinghouse (FAC) at https://harvester.census.gov/facweb/ the audit reporting package as required by 2 CFR Part 200, Subpart F – Audit Requirements, within the earlier of 30 calendar days after receipt of the auditor's report(s) or nine months after the end of the audit period. The FAC is the repository of record for audits required by 2 CFR Part 200, Subpart F – Audit Requirements. However, the Department requires a copy of the audit reporting package also be submitted to FDOTSingleAudit@dot.state.fl.us within the earlier of 30 calendar days after receipt of the auditor's report(s) or nine months after the end of the audit period as required by 2 CFR Part 200, Subpart F – Audit Requirements.

v. Within six months of acceptance of the audit report by the FAC, the Department will review the Agency's audit reporting package, including corrective action plans and management letters, to the extent necessary to determine whether timely and appropriate action on all deficiencies has been taken pertaining to the Federal award provided through the Department by this Agreement. If the Agency fails to have an audit conducted in accordance with 2 CFR Part 200, Subpart F – Audit Requirements, the Department may impose additional conditions to remedy noncompliance. If the Department determines that noncompliance cannot be remedied by imposing additional conditions, the Department may take appropriate actions to enforce compliance, which actions may include but not be limited to the following:

1. Temporarily withhold cash payments pending correction of the deficiency by the Agency or more severe enforcement action by the Department;
2. Disallow (deny both use of funds and any applicable matching credit for) all or part of the cost of the activity or action not in compliance;
3. Wholly or partly suspend or terminate the Federal award;
4. Initiate suspension or debarment proceedings as authorized under 2 C.F.R. Part 180 and Federal awarding agency regulations (or in the case of the Department, recommend such a proceeding be initiated by the Federal awarding agency);
5. Withhold further Federal awards for the Project or program;
6. Take other remedies that may be legally available.

vi. As a condition of receiving this Federal award, the Agency shall permit the Department or its designee, the CFO, or State of Florida Auditor General access to the Agency's records, including financial statements, the independent auditor's working papers, and project records as necessary. Records related to unresolved audit findings, appeals, or litigation shall be retained until the action is complete or the dispute is resolved.

vii. The Department's contact information for requirements under this part is as follows:

Office of Comptroller, MS 24
605 Suwannee Street
Tallahassee, Florida 32399-0450
FDOTSingleAudit@dot.state.fl.us

State Funded:

a. In addition to reviews of audits conducted in accordance with Section 215.97, Florida Statutes, monitoring procedures to monitor the Agency's use of state financial assistance may include but not be limited to on-site visits by Department staff and/or other procedures, including reviewing any required performance and financial reports, following up, ensuring corrective action, and issuing management decisions on weaknesses found through audits when those findings pertain to state financial assistance awarded through the Department by this Agreement. By entering into this Agreement, the Agency agrees to comply and cooperate fully with any monitoring procedures/processes deemed appropriate by the Department. The Agency further agrees to comply and cooperate with any inspections, reviews, investigations, or audits deemed necessary by the Department, the Department of Financial Services (DFS), or State of Florida Auditor General.

b. The Agency, a "nonstate entity" as defined by Section 215.97, Florida Statutes, as a recipient of state financial assistance awarded by the Department through this Agreement, is subject to the following requirements:

i. In the event the Agency meets the audit threshold requirements established by Section 215.97, Florida Statutes, the Agency must have a State single or project-specific audit conducted for such fiscal year in accordance with Section 215.97, Florida Statutes; applicable rules of the Department of Financial Services; and Chapters 10.550 (local governmental entities) or 10.650 (nonprofit and for-profit organizations), Rules of the Auditor General. **Exhibit "G", Audit Requirements for Awards of State Financial Assistance,** to this Agreement indicates state financial assistance awarded through the Department by this Agreement needed by the Agency to further comply with the requirements of Section 215.97, Florida Statutes. In determining the state financial assistance expended in a fiscal year, the Agency shall consider all sources of state financial assistance, including state financial assistance received from the Department by this Agreement, other state agencies, and other nonstate entities. State financial assistance does not include Federal direct or pass-through awards and resources received by a nonstate entity for Federal program matching requirements.

ii. In connection with the audit requirements, the Agency shall ensure that the audit complies with the requirements of Section 215.97(8), Florida Statutes. This includes submission of a financial reporting package as defined by Section 215.97(2)(e), Florida Statutes, and Chapters 10.550 (local governmental entities) or 10.650 (nonprofit and for-profit organizations), Rules of the Auditor General.

iii. In the event the Agency does not meet the audit threshold requirements established by Section 215.97, Florida Statutes, the Agency is exempt for such fiscal year from the state single audit requirements of Section 215.97, Florida Statutes. However, the Agency must provide a single audit exemption statement to the Department at FDOTSingleAudit@dot.state.fl.us no later than nine months after the end of the Agency's audit period for each applicable audit year. In the event the Agency does not meet the audit threshold requirements established by Section 215.97, Florida Statutes, in a fiscal year and elects to have an audit conducted in accordance with the provisions of Section 215.97, Florida Statutes, the cost of the audit must be paid from the Agency's resources (*i.e.*, the cost of such an audit must be paid from the Agency's resources obtained from other than State entities).

iv. In accordance with Chapters 10.550 (local governmental entities) or 10.650 (nonprofit and for-profit organizations), Rules of the Auditor General, copies of financial reporting packages required by this Agreement shall be submitted to:

Florida Department of Transportation
Office of Comptroller, MS 24
605 Suwannee Street
Tallahassee, Florida 32399-0405
FDOTSingleAudit@dot.state.fl.us

And

State of Florida Auditor General
Local Government Audits/342
111 West Madison Street, Room 401
Tallahassee, FL 32399-1450
Email: flaudgen_localgovt@aud.state.fl.us

v. Any copies of financial reporting packages, reports, or other information required to be submitted to the Department shall be submitted timely in accordance with Section 215.97, Florida Statutes, and Chapters 10.550 (local governmental entities) or 10.650 (nonprofit and for-profit organizations), Rules of the Auditor General, as

applicable.

vi. The Agency, when submitting financial reporting packages to the Department for audits done in accordance with Chapters 10.550 (local governmental entities) or 10.650 (nonprofit and for-profit organizations), Rules of the Auditor General, should indicate the date the reporting package was delivered to the Agency in correspondence accompanying the reporting package.

vii. Upon receipt, and within six months, the Department will review the Agency's financial reporting package, including corrective action plans and management letters, to the extent necessary to determine whether timely and appropriate corrective action on all deficiencies has been taken pertaining to the state financial assistance provided through the Department by this Agreement. If the Agency fails to have an audit conducted consistent with Section 215.97, Florida Statutes, the Department may take appropriate corrective action to enforce compliance.

viii. As a condition of receiving state financial assistance, the Agency shall permit the Department or its designee, DFS, or the Auditor General access to the Agency's records, including financial statements, the independent auditor's working papers, and project records as necessary. Records related to unresolved audit findings, appeals, or litigation shall be retained until the action is complete or the dispute is resolved.

c. The Agency shall retain sufficient records demonstrating its compliance with the terms of this Agreement for a period of five years from the date the audit report is issued and shall allow the Department or its designee, DFS, or State of Florida Auditor General access to such records upon request. The Agency shall ensure that the audit working papers are made available to the Department or its designee, DFS, or State of Florida Auditor General upon request for a period of five years from the date the audit report is issued, unless extended in writing by the Department.

16. **Notices and Approvals.** Notices and approvals referenced in this Agreement must be obtained in writing from the Parties' respective Administrators or their designees.

17. **Restrictions, Prohibitions, Controls and Labor Provisions:**

a. **Convicted Vendor List.** A person or affiliate who has been placed on the convicted vendor list following a conviction for a public entity crime may not submit a bid on a contract to provide any goods or services to a public entity; may not submit a bid on a contract with a public entity for the construction or repair of a public building or public work; may not submit bids on leases of real property to a public entity; may not be awarded or perform work as a contractor, supplier, subcontractor, or consultant under a contract with any public entity; and may not transact business with any public entity in excess of the threshold amount provided in Section 287.017, Florida Statutes, for CATEGORY TWO for a period of 36 months from the date of being placed on the convicted vendor list.

b. **Discriminatory Vendor List.** In accordance with Section 287.134, Florida Statutes, an entity or affiliate who has been placed on the Discriminatory Vendor List, kept by the Florida Department of Management Services, may not submit a bid on a contract to provide goods or services to a public entity; may not submit a bid on a contract with a public entity for the construction or repair of a public building or public work; may not submit bids on leases of real property to a public entity; may not be awarded or perform work as a contractor, supplier, subcontractor, or consultant under a contract with any public entity; and may not transact business with any public entity.

c. Non-Responsible Contractors. An entity or affiliate who has had its Certificate of Qualification suspended, revoked, denied, or have further been determined by the Department to be a non-responsible contractor, may not submit a bid or perform work for the construction or repair of a public building or public work on a contract with the Agency.

d. Prohibition on Using Funds for Lobbying. No funds received pursuant to this Agreement may be expended for lobbying the Florida Legislature, judicial branch, or any state agency, in accordance with Section 216.347, Florida Statutes.

e. Unauthorized Aliens. The Department shall consider the employment by any contractor of unauthorized aliens a violation of Section 274A(e) of the Immigration and Nationality Act. If the contractor knowingly employs unauthorized aliens, such violation will be cause for unilateral cancellation of this Agreement.

f. Procurement of Construction Services. If the Project is procured pursuant to Chapter 255, Florida Statutes, for construction services and at the time of the competitive solicitation for the Project, 50 percent or more of the cost of the Project is to be paid from state-appropriated funds, then the Agency must comply with the requirements of Section 255.0991, Florida Statutes.

g. E-Verify. The Agency shall:

i. Utilize the U.S. Department of Homeland Security's E-Verify system to verify the employment eligibility of all new employees hired by the Agency during the term of the contract; and

ii. Expressly require any subcontractors performing work or providing services pursuant to the state contract to likewise utilize the U.S. Department of Homeland Security's E-Verify system to verify the employment eligibility of all new employees hired by the subcontractor during the contract term.

h. Projects with Non-profit Organizations. Pursuant to Section 216.1366. Florida Statutes, if the Agency is a nonprofit organization as defined in Section 215.97(2)(m), Florida Statutes, the Agency shall provide documentation to indicate the amount of state funds:

i. Allocated to be used during the full term of this Agreement for remuneration to any member of the board of directors or an officer of the Agency

ii. Allocated under each payment by the Department to be used for remuneration of any member of the board of directors or an officer of the Agency. The documentation must indicate the amounts and recipients of the remuneration.

Such information will be posted by the Department to the Florida Accountability Contract Tracking System maintained pursuant to Section 215.985, F.S., and must additionally be posted to the Agency's website, if the Agency is a non-profit organization and maintains a website. The Agency shall utilize the Department's Form 350-090-19, Compensation to Non-Profits Using State Funds, for purposes of documenting the compensation. The subject Form is required for every contract for services executed, amended, or extended on or after July 1, 2023, with non-profit organizations.

Pursuant to Section 216.1366, F.S., the term:

iii. "Officer" means a chief executive officer, chief financial officer, chief operating officer, or any other position performing and equivalent function.

iv. "Remuneration" means all compensation earned by or awarded to personnel, whether paid or accrued, regardless of contingency, including bonuses, accrued paid time off,

severance payments, incentive payments, contributions to a retirement plan or in-kind payments, reimbursements, or allowances for moving expenses, vehicles and other transportation, telephone services, medical services, housing and meals.

v. "State Funds" means funds paid from the General Revenue Fund or any state trust fund, funds allocated by the Federal Government and distributed by the state, or funds appropriated by the Federal Government and distributed by the state, or funds appropriated by the state fo distribution through any grant program. The term does not include funds used for the Medicaid program.

i. Design Services and Construction Engineering and Inspection Services. If the Project is wholly or partially funded by the Department and administered by a local governmental entity, except for a seaport listed in Section 311.09, Florida Statutes, or an airport as defined in Section 332.004, Florida Statutes, the entity performing design and construction engineering and inspection services may not be the same entity.

18. Indemnification and Insurance:

a. It is specifically agreed between the Parties executing this Agreement that it is not intended by any of the provisions of any part of this Agreement to create in the public or any member thereof, a third party beneficiary under this Agreement, or to authorize anyone not a party to this Agreement to maintain a suit for personal injuries or property damage pursuant to the terms or provisions of this Agreement. The Agency guarantees the payment of all just claims for materials, supplies, tools, or labor and other just claims against the Agency or any subcontractor, in connection with this Agreement. Additionally, to the extent permitted by law and as limited by and pursuant to the provisions of Section 768.28, Florida Statutes, the Agency shall indemnify, defend, and hold harmless the State of Florida, Department of Transportation, including the Department's officers and employees, from liabilities, damages, losses, and costs, including, but not limited to, reasonable attorney's fees, to the extent caused by the negligence, recklessness, or intentional wrongful misconduct of the Agency and persons employed or utilized by the Agency in the performance of this Agreement. Nothing contained in this paragraph is intended to nor shall it constitute a waiver of the Department's or the Agency's sovereign immunity. Nothing contained in this paragraph is intended to nor shall it constitute a waiver of the Department's or the Agency's sovereign immunity. This indemnification shall survive the termination of this Agreement. Additionally, the Agency agrees to include the following indemnification in all contracts with contractors/subcontractors and consultants/subconsultants who perform work in connection with this Agreement:

"To the fullest extent permitted by law, the Agency's contractor/consultant shall indemnify, defend, and hold harmless the Agency and the State of Florida, Department of Transportation, including the Department's officers and employees, from liabilities, damages, losses and costs, including, but not limited to, reasonable attorney's fees, to the extent caused by the negligence, recklessness or intentional wrongful misconduct of the contractor/consultant and persons employed or utilized by the contractor/consultant in the performance of this Agreement.

This indemnification shall survive the termination of this Agreement."

b. The Agency shall provide Workers' Compensation Insurance in accordance with Florida's Workers' Compensation law for all employees. If subletting any of the work, ensure that the subcontractor(s) and subconsultant(s) have Workers' Compensation Insurance for their employees in accordance with Florida's Workers' Compensation law. If using "leased employees" or employees obtained through professional employer organizations ("PEO's"), ensure that such employees are covered by Workers' Compensation Insurance through the PEO's or other leasing entities. Ensure that any equipment rental agreements that include

operators or other personnel who are employees of independent contractors, sole proprietorships, or partners are covered by insurance required under Florida's Workers' Compensation law.

c. If the Agency elects to self-perform the Project, then the Agency may self-insure. If the Agency elects to hire a contractor or consultant to perform the Project, then the Agency shall carry, or cause its contractor or consultant to carry, Commercial General Liability insurance providing continuous coverage for all work or operations performed under this Agreement. Such insurance shall be no more restrictive than that provided by the latest occurrence form edition of the standard Commercial General Liability Coverage Form (ISO Form CG 00 01) as filed for use in the State of Florida. The Agency shall cause, or cause its contractor or consultant to cause, the Department to be made an Additional Insured as to such insurance. Such coverage shall be on an "occurrence" basis and shall include Products/Completed Operations coverage. The coverage afforded to the Department as an Additional Insured shall be primary as to any other available insurance and shall not be more restrictive than the coverage afforded to the Named Insured. The limits of coverage shall not be less than $1,000,000 for each occurrence and not less than a $5,000,000 annual general aggregate, inclusive of amounts provided by an umbrella or excess policy. The limits of coverage described herein shall apply fully to the work or operations performed under the Agreement, and may not be shared with or diminished by claims unrelated to the Agreement. The policy/ies and coverage described herein may be subject to a deductible and such deductibles shall be paid by the Named Insured. No policy/ies or coverage described herein may contain or be subject to a Retention or a Self-Insured Retention unless the Agency is a state agency or subdivision of the State of Florida that elects to self-perform the Project. Prior to the execution of the Agreement, and at all renewal periods which occur prior to final acceptance of the work, the Department shall be provided with an ACORD Certificate of Liability Insurance reflecting the coverage described herein. The Department shall be notified in writing within ten days of any cancellation, notice of cancellation, lapse, renewal, or proposed change to any policy or coverage described herein. The Department's approval or failure to disapprove any policy/ies, coverage, or ACORD Certificates shall not relieve or excuse any obligation to procure and maintain the insurance required herein, nor serve as a waiver of any rights or defenses the Department may have.

d. When the Agreement includes the construction of a railroad grade crossing, railroad overpass or underpass structure, or any other work or operations within the limits of the railroad right-of-way, including any encroachments thereon from work or operations in the vicinity of the railroad right-of-way, the Agency shall, or cause its contractor to, in addition to the insurance coverage required above, procure and maintain Railroad Protective Liability Coverage (ISO Form CG 00 35) where the railroad is the Named Insured and where the limits are not less than $2,000,000 combined single limit for bodily injury and/or property damage per occurrence, and with an annual aggregate limit of not less than $6,000,000. The railroad shall also be added along with the Department as an Additional Insured on the policy/ies procured pursuant to the paragraph above. Prior to the execution of the Agreement, and at all renewal periods which occur prior to final acceptance of the work, both the Department and the railroad shall be provided with an ACORD Certificate of Liability Insurance reflecting the coverage described herein. The insurance described herein shall be maintained through final acceptance of the work. Both the Department and the railroad shall be notified in writing within ten days of any cancellation, notice of cancellation, renewal, or proposed change to any policy or coverage described herein. The Department's approval or failure to disapprove any policy/ies, coverage, or ACORD Certificates shall not relieve or excuse any obligation to procure and maintain the insurance required herein, nor serve as a waiver of any rights the Department may have.

e. When the Agreement involves work on or in the vicinity of utility-owned property or facilities, the utility shall be added along with the Department as an Additional Insured on the Commercial General Liability policy/ies procured above.

STATE OF FLORIDA DEPARTMENT OF TRANSPORTATION
PUBLIC TRANSPORTATION GRANT AGREEMENT

19. Miscellaneous:

a. Environmental Regulations. The Agency will be solely responsible for compliance with all applicable environmental regulations and for any liability arising from non-compliance with these regulations, and will reimburse the Department for any loss incurred in connection therewith.

b. Non-Admission of Liability. In no event shall the making by the Department of any payment to the Agency constitute or be construed as a waiver by the Department of any breach of covenant or any default which may then exist on the part of the Agency and the making of such payment by the Department, while any such breach or default shall exist, shall in no way impair or prejudice any right or remedy available to the Department with respect to such breach or default.

c. Severability. If any provision of this Agreement is held invalid, the remainder of this Agreement shall not be affected. In such an instance, the remainder would then continue to conform to the terms and requirements of applicable law.

d. Agency not an agent of Department. The Agency and the Department agree that the Agency, its employees, contractors, subcontractors, consultants, and subconsultants are not agents of the Department as a result of this Agreement.

e. Bonus or Commission. By execution of the Agreement, the Agency represents that it has not paid and, also agrees not to pay, any bonus or commission for the purpose of obtaining an approval of its application for the financing hereunder.

f. Non-Contravention of State Law. Nothing in the Agreement shall require the Agency to observe or enforce compliance with any provision or perform any act or do any other thing in contravention of any applicable state law. If any of the provisions of the Agreement violate any applicable state law, the Agency will at once notify the Department in writing so that appropriate changes and modifications may be made by the Department and the Agency to the end that the Agency may proceed as soon as possible with the Project.

g. Execution of Agreement. This Agreement may be executed in one or more counterparts, each of which shall be deemed an original, but all of which shall constitute the same Agreement. A facsimile or electronic transmission of this Agreement with a signature on behalf of a party will be legal and binding on such party.

h. Federal Award Identification Number (FAIN). If the FAIN is not available prior to execution of the Agreement, the Department may unilaterally add the FAIN to the Agreement without approval of the Agency and without an amendment to the Agreement. If this occurs, an updated Agreement that includes the FAIN will be provided to the Agency and uploaded to the Department of Financial Services' Florida Accountability Contract Tracking System (FACTS).

i. Inspector General Cooperation. The Agency agrees to comply with Section 20.055(5), Florida Statutes, and to incorporate in all subcontracts the obligation to comply with Section 20.055(5), Florida Statutes.

j. Law, Forum, and Venue. This Agreement shall be governed by and construed in accordance with the laws of the State of Florida. In the event of a conflict between any portion of the contract and Florida law, the laws of Florida shall prevail. The Agency agrees to waive forum and venue and that the Department shall determine the forum and venue in which any dispute under this Agreement is decided.

IN WITNESS WHEREOF, the Parties have executed this Agreement on the day and year written above.

Docusign Envelope ID: EBFDF60F-F2EE-4305-9C90-D6E520CBD296

STATE OF FLORIDA DEPARTMENT OF TRANSPORTATION
PUBLIC TRANSPORTATION GRANT AGREEMENT

Form 725-000-01
STRATEGIC DEVELOPMENT
OGC 10/24

AGENCY City of Winter Haven

By: _____

Name: _____

Title: _____

STATE OF FLORIDA, DEPARTMENT OF TRANSPORTATION

By: _____

Name: Nicole E. Mills, P.E.

Title: Director of Transportation Development

STATE OF FLORIDA, DEPARTMENT OF TRANSPORTATION
Legal Review:

Don Conway, Senior Attorney (as to form and legality)

DS DC

Docusign Envelope ID: EBFDF60F-F2EE-4305-9C90-D6E520CBD296

EXHIBIT A

Project Description and Responsibilities

A. Project Description (description of Agency's project to provide context, description of project components funded via this Agreement (if not the entire project)): Winter Haven Airport Replace Beacon & PAPI Units

B. Project Location (limits, city, county, map): Winter Haven Regional Airport/Winter Haven, FL/Polk

C. Project Scope (allowable costs: describe project components, improvement type/service type, approximate timeline, project schedule, project size): As required by 215.971, F.S., this scope of work includes but is not limited to consultant and design fees; survey and geotechnical costs; construction inspection and material testing costs; mobilization and demobilization; and the purchase, relocation, refurbishment, or upgrade of NAVAIDs. Procurement and installation of new NAVAIDs include purchase, delivery, site work, electrical work, coordination with necessary agencies, permitting, testing, and commissioning of the new NAVAID. The relocation project includes the costs associated with the removal and relocation of said NAVAID; earthwork and electrical work of the new site; restoration of the previous site; coordination with all necessary agencies; permitting; testing, and the commissioning of the relocated NAVAID. Refurbishment, enhancement, and upgrades include the cost of new parts, repairs, modification to the existing NAVAID, permitting, coordination with necessary agencies, testing, and the commissioning of the modified NAVAID. All NAVAID projects include the materials, equipment, labor, and incidentals required to complete a NAVAID project. The Sponsor will comply with Aviation Program Assurances.

D. Deliverable(s):

The project scope identifies the ultimate project deliverables. Deliverables for requisition, payment and invoice purposes will be the incremental progress made toward completion of project scope elements. Supporting documentation will be quantifiable, measurable, and verifiable, to allow for a determination of the amount of incremental progress that has been made, and provide evidence that the payment requested is commensurate with the accomplished incremental progress and costs incurred by the Agency.

E. Unallowable Costs (including but not limited to):

F. Transit Operating Grant Requirements (Transit Only):

Transit Operating Grants billed as an operational subsidy will require an expenditure detail report from the Agency that matches the invoice period. The expenditure detail, along with the progress report, will be the required deliverables for Transit Operating Grants. Operating grants may be issued for a term not to exceed three years from execution. The original grant agreement will include funding for year one. Funding for years two and three will be added by amendment as long as the grantee has submitted all invoices on schedule and the project deliverables for the year have been met.

Docusign Envelope ID: EBFDF60F-F2EE-4305-9C90-D6E520CBD296



EXHIBIT "A"
to Resolution R-25-09

STATE OF FLORIDA DEPARTMENT OF TRANSPORTATION
PUBLIC TRANSPORTATION GRANT AGREEMENT EXHIBITS

Form 725-000-02
STRATEGIC DEVELOPMENT
OGC 10/24

EXHIBIT B

Schedule of Financial Assistance

FUNDS AWARDED TO THE AGENCY AND REQUIRED MATCHING FUNDS PURSUANT TO THIS AGREEMENT CONSIST OF THE FOLLOWING:

A. Fund Type and Fiscal Year:

Financial Management Number	Fund Type	FLAIR Category	State Fiscal Year	Object Code	CSFA/ CFDA Number	CSFA/CFDA Title or Funding Source Description	Funding Amount
451944-1-94-01	DPTO	088719	2025	751000	55.004	Aviation Grant Program	$200,000.00
451944-1-94-01	LF	088719	2025	751000	55.004	Aviation Grant Program	$50,000.00
	Total Financial Assistance						$250,000.00

B. Estimate of Project Costs by Grant Phase:

Phases*	State	Local	Federal	Totals	State %	Local %	Federal %
Land Acquisition	$0.00	$0.00	$0.00	$0.00	0.00	0.00	0.00
Planning	$0.00	$0.00	$0.00	$0.00	0.00	0.00	0.00
Environmental/Design/Construction	$200,000.00	$50,000.00	$0.00	$250,000.00	80.00	20.00	0.00
Capital Equipment/ Preventative Maintenance	$0.00	$0.00	$0.00	$0.00	0.00	0.00	0.00
Match to Direct Federal Funding	$0.00	$0.00	$0.00	$0.00	0.00	0.00	0.00
Mobility Management (Transit Only)	$0.00	$0.00	$0.00	$0.00	0.00	0.00	0.00
Totals	$200,000.00	$50,000.00	$0.00	$250,000.00			

*Shifting items between these grant phases requires execution of an Amendment to the Public Transportation Grant Agreement.

Scope Code and/or Activity Line Item (ALI) (Transit Only)	

BUDGET/COST ANALYSIS CERTIFICATION AS REQUIRED BY SECTION 216.3475, FLORIDA STATUTES:

I certify that the cost for each line item budget category (grant phase) has been evaluated and determined to be allowable, reasonable, and necessary as required by Section 216.3475, Florida Statutes. Documentation is on file evidencing the methodology used and the conclusions reached.

Jennifer Gaona, MPA

Department Grant Manager Name

DocuSigned by:
Jennifer Gaona
23A08B2DA0DD44D...

02/17/2025 | 2:47 PM EST

Signature Date

Docusign Envelope ID: EBFDF60F-F2EE-4305-9C90-D6E520CBD296

EXHIBIT C

TERMS AND CONDITIONS OF CONSTRUCTION

1. **Design and Construction Standards and Required Approvals.**

   a. The Agency understands that it is responsible for the preparation and certification of all design plans for the Project. The Agency shall hire a qualified consultant for the design phase of the Project or, if applicable, the Agency shall require their design-build contractor or construction management contractor to hire a qualified consultant for the design phase of the Project.

   b. Execution of this Agreement by both Parties shall be deemed a Notice to Proceed to the Agency for the design phase or other non-construction phases of the Project. If the Project involves a construction phase, the Agency shall not begin the construction phase of the Project until the Department issues a Notice to Proceed for the construction phase. Prior to commencing the construction work described in this Agreement, the Agency shall request a Notice to Proceed from the Department's Project Manager, Jennifer Gaona, MPA (email: jennifer.gaona@dot.state.fl.us) or from an appointed designee. Any construction phase work performed prior to the execution of this required Notice to Proceed is not subject to reimbursement.

   c. The Agency will provide one (1) copy of the final design plans and specifications and final bid documents to the Department's Project Manager prior to bidding or commencing construction of the Project.

   d. The Agency shall require the Agency's contractor to post a payment and performance bond in accordance with applicable law(s).

   e. The Agency shall be responsible to ensure that the construction work under this Agreement is performed in accordance with the approved construction documents, and that the construction work will meet all applicable Agency and Department standards.

   f. Upon completion of the work authorized by this Agreement, the Agency shall notify the Department in writing of the completion of construction of the Project; and for all design work that originally required certification by a Professional Engineer, this notification shall contain an Engineer's Certification of Compliance, signed and sealed by a Professional Engineer, the form of which is attached to this Exhibit. The certification shall state that work has been completed in compliance with the Project construction plans and specifications. If any deviations are found from the approved plans or specifications, the certification shall include a list of all deviations along with an explanation that justifies the reason to accept each deviation.

2. **Construction on the Department's Right of Way.** If the Project involves construction on the Department's right-of-way, then the following provisions apply to any and all portions of the Project that are constructed on the Department's right-of-way:

   a. The Agency shall hire a qualified contractor using the Agency's normal bid procedures to perform the construction work for the Project. The Agency must certify that the installation of the Project is completed by a Contractor prequalified by the Department as required by Section 2 of the Standard Specifications for Road and Bridge Construction (2016), as amended, unless otherwise approved by the Department in writing or the Contractor exhibits past project experience in the last five years that are comparable in scale, composition, and overall quality to the site characterized within the scope of services of this Project.

b. Construction Engineering Inspection (CEI) services will be provided by the Agency by hiring a Department prequalified consultant firm including one individual that has completed the Advanced Maintenance of Traffic Level Training, unless otherwise approved by the Department in writing. The CEI staff shall be present on the Project at all times that the contractor is working. Administration of the CEI staff shall be under the responsible charge of a State of Florida Licensed Professional Engineer who shall provide the certification that all design and construction for the Project meets the minimum construction standards established by Department. The Department shall approve all CEI personnel. The CEI firm shall not be the same firm as that of the Engineer of Record for the Project. The Department shall have the right, but not the obligation, to perform independent assurance testing during the course of construction of the Project. Notwithstanding the foregoing, the Department may issue a written waiver of the CEI requirement for portions of Projects involving the construction of bus shelters, stops, or pads.

c. The Project shall be designed and constructed in accordance with the latest edition of the Department's Standard Specifications for Road and Bridge Construction, the Department Design Standards, and the Manual of Uniform Traffic Control Devices (MUTCD). The following guidelines shall apply as deemed appropriate by the Department: the Department Structures Design Manual, AASHTO Guide Specifications for the Design of Pedestrian Bridges, AASHTO LRFD Bridge Design Specifications, Florida Design Manual, Manual for Uniform Minimum Standards for Design, Construction and Maintenance for Streets and Highways (the "Florida Green Book"), and the Department Traffic Engineering Manual. The Agency will be required to submit any construction plans required by the Department for review and approval prior to any work being commenced. Should any changes to the plans be required during construction of the Project, the Agency shall be required to notify the Department of the changes and receive approval from the Department prior to the changes being constructed. The Agency shall maintain the area of the Project at all times and coordinate any work needs of the Department during construction of the Project.

d. The Agency shall notify the Department a minimum of 48 hours before beginning construction within Department right-of-way. The Agency shall notify the Department should construction be suspended for more than 5 working days. The Department contact person for construction is __.

e. The Agency shall be responsible for monitoring construction operations and the maintenance of traffic (MOT) throughout the course of the Project in accordance with the latest edition of the Department Standard Specifications, section 102. The Agency is responsible for the development of a MOT plan and making any changes to that plan as necessary. The MOT plan shall be in accordance with the latest version of the Department Design Standards, Index 600 series. Any MOT plan developed by the Agency that deviates from the Department Design Standards must be signed and sealed by a professional engineer. MOT plans will require approval by the Department prior to implementation.

f. The Agency shall be responsible for locating all existing utilities, both aerial and underground, and for ensuring that all utility locations be accurately documented on the construction plans. All utility conflicts shall be fully resolved directly with the applicable utility.

g. The Agency will be responsible for obtaining all permits that may be required by other agencies or local governmental entities.

h. It is hereby agreed by the Parties that this Agreement creates a permissive use only and all improvements located on the Department's right-of-way resulting from this Agreement shall become the property of the Department. Neither the granting of the permission to use the Department right of way nor the placing of facilities upon the Department property shall operate to create or vest any property right to or in the Agency, except as may otherwise be provided in separate agreements. The Agency shall not acquire any right, title, interest or

estate in Department right of way, of any nature or kind whatsoever, by virtue of the execution, operation, effect, or performance of this Agreement including, but not limited to, the Agency's use, occupancy or possession of Department right of way. The Parties agree that this Agreement does not, and shall not be construed to, grant credit for any future transportation concurrency requirements pursuant to Chapter 163, F.S.

i. The Agency shall not cause any liens or encumbrances to attach to any portion of the Department's property, including but not limited to, the Department's right-of-way.

j. The Agency shall perform all required testing associated with the design and construction of the Project. Testing results shall be made available to the Department upon request. The Department shall have the right to perform its own independent testing during the course of the Project.

k. The Agency shall exercise the rights granted herein and shall otherwise perform this Agreement in a good and workmanlike manner, with reasonable care, in accordance with the terms and provisions of this Agreement and all applicable federal, state, local, administrative, regulatory, safety and environmental laws, codes, rules, regulations, policies, procedures, guidelines, standards and permits, as the same may be constituted and amended from time to time, including, but not limited to, those of the Department, applicable Water Management District, Florida Department of Environmental Protection, the United States Environmental Protection Agency, the United States Army Corps of Engineers, the United States Coast Guard and local governmental entities.

l. If the Department determines a condition exists which threatens the public's safety, the Department may, at its discretion, cause construction operations to cease and immediately have any potential hazards removed from its right-of-way at the sole cost, expense, and effort of the Agency. The Agency shall bear all construction delay costs incurred by the Department.

m. The Agency shall be responsible to maintain and restore all features that might require relocation within the Department right-of-way.

n. The Agency will be solely responsible for clean up or restoration required to correct any environmental or health hazards that may result from construction operations.

o. The acceptance procedure will include a final "walk-through" by Agency and Department personnel. Upon completion of construction, the Agency will be required to submit to the Department final as-built plans and an engineering certification that construction was completed in accordance to the plans. Submittal of the final as-built plans shall include one complete set of the signed and sealed plans on 11" X 17" plan sheets and an electronic copy prepared in Portable Document Format (PDF). Prior to the termination of this Agreement, the Agency shall remove its presence, including, but not limited to, all of the Agency's property, machinery, and equipment from Department right-of-way and shall restore those portions of Department right of way disturbed or otherwise altered by the Project to substantially the same condition that existed immediately prior to the commencement of the Project.

p. If the Department determines that the Project is not completed in accordance with the provisions of this Agreement, the Department shall deliver written notification of such to the Agency. The Agency shall have thirty (30) days from the date of receipt of the Department's written notice, or such other time as the Agency and the Department mutually agree to in writing, to complete the Project and provide the Department with written notice of the same (the "Notice of Completion"). If the Agency fails to timely deliver the Notice of Completion, or if it is determined that the Project is not properly completed after receipt of the Notice of Completion, the Department, within its discretion may: 1) provide the Agency with written authorization granting such additional time as the Department deems appropriate to correct the deficiency(ies); or 2) correct the deficiency(ies) at the Agency's sole cost and expense,

without Department liability to the Agency for any resulting loss or damage to property, including, but not limited to, machinery and equipment. If the Department elects to correct the deficiency(ies), the Department shall provide the Agency with an invoice for the costs incurred by the Department and the Agency shall pay the invoice within thirty (30) days of the date of the invoice.

q. The Agency shall implement best management practices for erosion and pollution control to prevent violation of state water quality standards. The Agency shall be responsible for the correction of any erosion, shoaling, or water quality problems that result from the construction of the Project.

r. Portable Traffic Monitoring Site (PTMS) or a Telemetry Traffic Monitoring Site (TTMS) may exist within the vicinity of your proposed work. It is the responsibility of the Agency to locate and avoid damage to these sites. If a PTMS or TTMS is encountered during construction, the Department must be contacted immediately.

s. During construction, highest priority must be given to pedestrian safety. If permission is granted to temporarily close a sidewalk, it should be done with the express condition that an alternate route will be provided, and shall continuously maintain pedestrian features to meet Americans Disability Act (ADA) standards.

t. Restricted hours of operation will be as follows, unless otherwise approved by the Department's District Construction Engineer or designee (insert hours and days of the week for restricted operation):

u. Lane closures on the state road system must be coordinated with the Public Information Office at least two weeks prior to the closure. The contact information for the Department's Public Information Office is:

Insert District PIO contact info:

Note: (Highlighted sections indicate need to confirm information with District Office or appropriate DOT person managing the Agreement)

3. **Engineer's Certification of Compliance.** The Agency shall complete and submit and if applicable Engineer's Certification of Compliance to the Department upon completion of the construction phase of the Project.

Docusign Envelope ID: EBFDF60F-F2EE-4305-9C90-D6E520CBD296

STATE OF FLORIDA DEPARTMENT OF TRANSPORTATION
PUBLIC TRANSPORTATION GRANT AGREEMENT EXHIBITS

Form 725-000-02
STRATEGIC DEVELOPMENT
OGC 10/24

ENGINEER'S CERTIFICATION OF COMPLIANCE

PUBLIC TRANSPORTATION GRANT AGREEMENT
BETWEEN
THE STATE OF FLORIDA, DEPARTMENT OF TRANSPORTATION
and _____

PROJECT DESCRIPTION: _____

DEPARTMENT CONTRACT NO.: _____

FINANCIAL MANAGEMENT NO.: _____

In accordance with the Terms and Conditions of the Public Transportation Grant Agreement, the undersigned certifies that all work which originally required certification by a Professional Engineer has been completed in compliance with the Project construction plans and specifications. If any deviations have been made from the approved plans, a list of all deviations, along with an explanation that justifies the reason to accept each deviation, will be attached to this Certification. Also, with submittal of this certification, the Agency shall furnish the Department a set of "as-built" plans for construction on the Department's Right of Way certified by the Engineer of Record/CEI.

By: _____, P.E.

SEAL:

Name: _____

Date: _____

Docusign Envelope ID: EBFDF60F-F2EE-4305-9C90-D6E520CBD296

EXHIBIT D

AGENCY RESOLUTION

PLEASE SEE ATTACHED

Docusign Envelope ID: EBFDF60F-F2EE-4305-9C90-D6E520CBD296

EXHIBIT E

PROGRAM SPECIFIC TERMS AND CONDITIONS - AVIATION
AVIATION PROGRAM ASSURANCES

A. General.

1. The assurances herein shall form an integral part of the Agreement between the Department and the Agency.

2. These assurances delineate the obligations of the Parties to this Agreement to ensure their commitment and compliance with specific provisions of **Exhibit "A", Project Description and Responsibilities**, and **Exhibit "B", Schedule of Financial Assistance**, as well as serving to protect public investment in public-use airports and the continued viability of the Florida Aviation System.

3. The Agency shall comply with the assurances as specified in this Agreement.

4. The terms and assurances of this Agreement shall remain in full force and effect throughout the useful life of a facility developed; equipment acquired; or Project items installed within a facility for an airport development or noise compatibility program project, but shall not exceed 20 years from the effective date of this Agreement.

5. There shall be no limit on the duration of the terms and assurances of this Agreement regarding Exclusive Rights and Airport Revenue so long as the property is used as a public airport.

6. There shall be no limit on the duration of the terms and assurances of this Agreement with respect to real property acquired with funds provided by this Agreement.

7. Subject to appropriations, the Department shall continue to comply with its financial commitment to this Project under the terms of this Agreement, until such time as the Department may determine that the Agency has failed to comply with the terms and assurances of this Agreement.

8. An Agency that has been determined by the Department to have failed to comply with either the terms of these Assurances, or the terms of the Agreement, or both, shall be notified, in writing, by the Department, identifying the specifics of the non-compliance and any corrective action by the Agency to remedy the failure.

9. Failure by the Agency to satisfactorily remedy the non-compliance shall absolve the Department's continued financial commitment to this Project and immediately require the Agency to repay the Department the full amount of funds expended by the Department on this Project.

10. Any history of failure to comply with the terms and assurances of an Agreement will jeopardize the Agency's eligibility for further state funding of airport projects by the Department.

B. Agency Compliance Certification.

1. **General Certification.** The Agency hereby certifies, with respect to this Project, it will comply, within its authority, with all applicable, current laws and rules of the State of Florida and applicable local governments, as well as Department policies, guidelines, and requirements, including but not limited to, the following (latest version of each document):

   a. **Florida Statutes (F.S.)**
      - Chapter 163, F.S., Intergovernmental Programs
      - Chapter 329, F.S., Aircraft: Title; Liens; Registration; Liens
      - Chapter 330, F.S., Regulation of Aircraft, Pilots, and Airports
      - Chapter 331, F.S., Aviation and Aerospace Facilities and Commerce
      - Chapter 332, F.S., Airports and Other Air Navigation Facilities
      - Chapter 333, F.S., Airport Zoning

b. Florida Administrative Code (FAC)

- Chapter 73C-41, FAC, Community Planning; Governing the Procedure for the Submittal and Review of Local Government Comprehensive Plans and Amendments
- Chapter 14-60, FAC, Airport Licensing, Registration, and Airspace Protection
- Section 62-256.300, FAC, Open Burning, Prohibitions
- Section 62-701.320(13), FAC, Solid Waste Management Facility Permit Requirements, General, Airport Safety

c. Local Government Requirements

- Airport Zoning Ordinance
- Local Comprehensive Plan

d. Department Requirements

- Eight Steps of Building a New Airport
- Florida Airport Revenue Use Guide
- Florida Aviation Project Handbook
- Guidebook for Airport Master Planning
- Airport Compatible Land Use Guidebook

2. **Construction Certification.** The Agency hereby certifies, with respect to a construction-related project, that all design plans and specifications will comply with applicable federal, state, local, and professional standards, as well as Federal Aviation Administration (FAA) Advisory Circulars (AC's) and FAA issued waivers thereto, including but not limited to, the following:

a. Federal Requirements

- FAA AC 70/7460-1, Obstruction Marking and Lighting
- FAA AC 150/5300-13, Airport Design
- FAA AC 150/5370-2, Operational Safety on Airports During Construction
- FAA AC 150/5370-10, Standards for Specifying Construction of Airports

b. Local Government Requirements

- Local Building Codes
- Local Zoning Codes

c. Department Requirements

- Manual of Uniform Minimum Standards for Design, Construction and Maintenance for Streets and Highways (Commonly Referred to as the "Florida Green Book")
- Manual on Uniform Traffic Control Devices
- Section 14-60.007, FAC, Airfield Standards for Licensed Airports
- Standard Specifications for Construction of General Aviation Airports
- Design Guidelines & Minimum Standard Requirements for T-Hangar Projects

3. **Land Acquisition Certification.** The Agency hereby certifies, regarding land acquisition, that it will comply with applicable federal and/or state policies, regulations, and laws, including but not limited to the following:

a. Federal Requirements

- Uniform Relocation Assistance and Real Property Acquisition Policies Act of 1970
- National Environmental Policy of 1969
- FAA Order 5050.4, National Environmental Policy Act Implementing Instructions for Airport Projects
- FAA Order 5100.37B, Land Acquisition and Relocation Assistance for Airport Projects

b. Florida Requirements

- Chapter 73, F.S., Eminent Domain (re: Property Acquired Through Condemnation)
- Chapter 74, F.S., Proceedings Supplemental to Eminent Domain (re: Condemnation)
- Section 286.23, F.S., Public Business: Miscellaneous Provisions

Docusign Envelope ID: EBFDF60F-F2EE-4305-9C90-D6E520CBD296

C. Agency Authority.

1. **Legal Authority.** The Agency hereby certifies, with respect to this Agreement, that it has the legal authority to enter into this Agreement and commit to this Project; that a resolution, motion, or similar action has been duly adopted or passed as an official act of the airport sponsor's governing body authorizing this Agreement, including assurances contained therein, and directing and authorizing the person identified as the official representative of the governing body to act on its behalf with respect to this Agreement and to provide any additional information as may be required.

2. **Financial Authority.** The Agency hereby certifies, with respect to this Agreement, that it has sufficient funds available for that portion of the Project costs which are not paid by the U.S. Government or the State of Florida; that it has sufficient funds available to assure future operation and maintenance of items funded by this Project, which it will control; and that authority has been granted by the airport sponsor governing body to commit those funds to this Project.

D. Agency Responsibilities. The Agency hereby certifies it currently complies with or will comply with the following responsibilities:

1. **Accounting System.**

   a. The Agency shall create and maintain a separate account to document all of the financial transactions related to the airport as a distinct entity.

   b. The accounting records shall be kept by the Agency or its authorized representative in accordance with Generally Accepted Accounting Principles and in an accounting system that will facilitate an effective audit in accordance with the 2 CFR Part 200, Uniform Administrative Requirements, Cost Principles, and Audit Requirements for Federal Awards and Section 215.97, F.S., Florida Single Audit Act.

   c. The Department has the right to audit and inspect all financial records of the Agency upon reasonable notice.

2. **Good Title.**

   a. The Agency holds good title, satisfactory to the Department, to the airport or site thereof, or gives assurance, satisfactory to the Department, that good title will be obtained.

   b. For noise compatibility program projects undertaken on the airport sponsor's property, the Agency holds good title, satisfactory to the Department, to that portion of the property upon which state funds will be expended, or gives assurance, satisfactory to the Department, that good title will be obtained.

3. **Preserving Rights and Powers.**

   a. The Agency shall not take or permit any action which would operate to deprive it of any of the rights and powers necessary to perform any or all of the terms and assurances of this Agreement without the written approval of the Department. Further, the Agency shall act promptly to acquire, extinguish, or modify, in a manner acceptable to the Department, any outstanding rights or claims of right of others which would interfere with such performance by the Agency.

   b. If an arrangement is made for management and operation of the airport by any entity or person other than the Agency or an employee of the Agency, the Agency shall reserve sufficient rights and authority to ensure that the airport will be operated and maintained in accordance with the terms and assurances of this Agreement.

4. **Hazard Removal and Mitigation.**

a. For airport hazards located on airport controlled property, the Agency shall clear and protect terminal airspace required for instrument and visual operations at the airport (including established minimum flight altitudes) by removing, lowering, relocating, marking, or lighting or otherwise mitigating existing airport hazards and by preventing the establishment or creation of future airport hazards.

b. For airport hazards not located on airport controlled property, the Agency shall work in conjunction with the governing public authority or private land owner of the property to clear and protect terminal airspace required for instrument and visual operations at the airport (including established minimum flight altitudes) by removing, lowering, relocating, marking, or lighting or otherwise mitigating existing airport hazards and by preventing the establishment or creation of future airport hazards. The Agency may enter into an agreement with surrounding property owners or pursue available legal remedies to remove potential hazards to air navigation.

5. Airport Compatible Land Use.

a. The Agency assures that appropriate airport zoning ordinances are in place consistent with Section 333.03, F.S., or if not in place, that it will take appropriate action necessary to ensure local government adoption of an airport zoning ordinance or execution of an interlocal agreement with another local government body having an airport zoning ordinance, consistent with the provisions of Section 333.03, F.S.

b. The Agency assures that it will disapprove or oppose any attempted alteration or creation of objects, natural or man-made, dangerous to navigable airspace or that would adversely affect the current or future levels of airport operations.

c. The Agency assures that it will disapprove or oppose any attempted change in local land use development regulations that would adversely affect the current or future levels of airport operations by creation or expansion of airport incompatible land use areas.

6. Consistency with Local Government Plans.

a. The Agency assures the Project is consistent with the currently existing and planned future land use development plans approved by the local government having jurisdictional responsibility for the area surrounding the airport.

b. The Agency assures that it has given fair consideration to the interest of local communities and has had reasonable consultation with those parties affected by the Project.

c. The Agency shall consider and take appropriate actions, if deemed warranted by the Agency, to adopt the current, approved Airport Master Plan into the local government comprehensive plan.

7. Consistency with Airport Master Plan and Airport Layout Plan.

a. The Agency assures that the project, covered by the terms and assurances of this Agreement, is consistent with the most current Airport Master Plan.

b. The Agency assures that the Project, covered by the terms and assurances of this Agreement, is consistent with the most current, approved Airport Layout Plan (ALP), which shows:

1) The boundaries of the airport and all proposed additions thereto, together with the boundaries of all offsite areas owned or controlled by the Agency for airport purposes and proposed additions thereto;
2) The location and nature of all existing and proposed airport facilities and structures (such as runways, taxiways, aprons, terminal buildings, hangars, and roads), including all proposed extensions and reductions of existing airport facilities; and
3) The location of all existing and proposed non-aviation areas on airport property and of all existing improvements thereon.

c. The Agency assures that it will not make or permit any changes or alterations on the airport or any of its facilities that are not consistent with the Airport Master Plan and the Airport Layout Plan, as approved by the Department.

d. Original Airport Master Plans and Airport Layout Plans and each amendment, revision, or modification thereof, will be subject to the approval of the Department.

8. Airport Financial Plan.

a. The Agency assures that it will develop and maintain a cost-feasible Airport financial plan to accomplish the projects necessary to achieve the proposed airport improvements identified in the Airport Master Plan and depicted in the Airport Layout Plan, and any updates thereto. The Agency's Airport financial plan must comply with the following conditions:

1) The Airport financial plan will be a part of the Airport Master Plan.
2) The Airport financial plan will realistically assess project phasing considering availability of state and local funding and likelihood of federal funding under the FAA's priority system.
3) The Airport financial plan will not include Department funding for projects that are inconsistent with the local government comprehensive plan.

b. All Project cost estimates contained in the Airport financial plan shall be entered into and kept current in the Florida Aviation Database (FAD) Joint Automated Capital Improvement Program (JACIP) website.

9. Airport Revenue. The Agency assures that all revenue generated by the airport will be expended for capital improvement or operating costs of the airport; the local airport system; or other local facilities which are owned or operated by the owner or operator of the airport and which are directly and substantially related to the air transportation of passengers or property, or for environmental or noise mitigation purposes on or off the airport.

10. Fee and Rental Structure.

a. The Agency assures that it will maintain a fee and rental structure for facilities and services at the airport that it will make the airport as self-sustaining as possible under the circumstances existing at the particular airport.

b. If this Agreement results in a facility that will be leased or otherwise produce revenue, the Agency assures that the price charged for that facility will be based on the market value.

11. Public-Private Partnership for Aeronautical Uses.

a. If the airport owner or operator and a person or entity that owns an aircraft or an airport tenant or potential tenant agree that an aircraft hangar or tenant-specific facility, respectively, is to be constructed on airport property for aircraft storage or tenant use at the expense of the aircraft owner or tenant, the airport owner or operator may grant to the aircraft owner or tenant of the facility a lease that is subject to such terms and conditions on the facility as the airport owner or operator may impose, subject to approval by the Department.

b. The price charged for said lease will be based on market value, unless otherwise approved by the Department.

12. Economic Nondiscrimination.

a. The Agency assures that it will make the airport available as an airport for public use on reasonable terms without unjust discrimination to all types, kinds and classes of aeronautical activities, including commercial aeronautical activities offering services to the public.

1) The Agency may establish such reasonable, and not unjustly discriminatory, conditions to be met by all users of the airport as may be necessary for the safe and efficient operation of the airport.

2) The Agency may prohibit or limit any given type, kind or class of aeronautical use of the airport if such action is necessary for the safe operation of the airport or necessary to serve the civil aviation needs of the public.

b. The Agency assures that each airport Fixed-Based Operator (FBO) shall be subject to the same rates, fees, rentals, and other charges as are uniformly applicable to all other FBOs making the same or similar uses of such airport and utilizing the same or similar facilities.

13. Air and Water Quality Standards. The Agency assures that all projects involving airport location, major runway extension, or runway location will be located, designed, constructed, and operated so as to comply with applicable air and water quality standards.

14. Operations and Maintenance.

a. The Agency assures that the airport and all facilities, which are necessary to serve the aeronautical users of the airport, shall be operated at all times in a safe and serviceable condition and in accordance with the minimum standards as may be required or prescribed by applicable federal and state agencies for maintenance and operation, as well as minimum standards established by the Department for State of Florida licensing as a public-use airport.

1) The Agency assures that it will not cause or permit any activity or action thereon which would interfere with its use for airport purposes.
2) Except in emergency situations, any proposal to temporarily close the airport for non-aeronautical purposes must first be approved by the Department.
3) The Agency assures that it will have arrangements for promptly notifying airmen of any condition affecting aeronautical use of the airport.

b. Nothing contained herein shall be construed to require that the airport be operated for aeronautical use during temporary periods when adverse weather conditions interfere with safe airport operations.

15. Federal Funding Eligibility.

a. The Agency assures it will take appropriate actions to maintain federal funding eligibility for the airport and it will avoid any action that renders the airport ineligible for federal funding.

b. If the Agency becomes ineligible for federal funding of airport projects, such determination will render the Agency ineligible for state funding of airport projects.

16. Project Implementation.

a. The Agency assures that it will begin making expenditures or incurring obligations pertaining to this Project within one year after the effective date of this Agreement.

b. The Agency may request a one-year extension of this one-year time period, subject to approval by the Department District Secretary or designee.

c. Failure of the Agency to make expenditures, incur obligations or receive an approved extension may allow the Department to terminate this Agreement.

17. Exclusive Rights. The Agency assures that it will not permit any exclusive right for use of the airport by any person providing, or intending to provide, aeronautical services to the public.

18. Airfield Access.

a. The Agency assures that it will not grant or allow general easement or public access that opens onto or crosses the airport runways, taxiways, flight line, passenger facilities, or any area used for emergency

equipment, fuel, supplies, passengers, mail and freight, radar, communications, utilities, and landing systems, including but not limited to flight operations, ground services, emergency services, terminal facilities, maintenance, repair, or storage, except for those normal airport providers responsible for standard airport daily services or during special events at the airport open to the public with limited and controlled access.

b. The Agency assures that it will not grant or allow general easement or public access to any portion of the airfield from adjacent real property which is not owned, operated, or otherwise controlled by the Agency without prior Department approval.

19. **Retention of Rights and Interests.** The Agency will not sell, lease, encumber, or otherwise transfer or dispose of any part of its title or other interests in the real property shown as airport owned or controlled on the current airport layout plan without prior written approval by the Department. It will not sell, lease, encumber, terminate, waive, or otherwise transfer or dispose of any part of its title, rights, or other interest in existing noise easements or avigation easements on any property, airport or non-airport, without prior written approval by the Department. These assurances shall not limit the Agency's right to lease airport property for airport-compatible purposes.

20. **Consultant, Contractor, Scope, and Costs.**

a. The Department has the right to disapprove the Agency's employment of consultants, contractors, and subcontractors for all or any part of this Project if the specific consultants, contractors, or subcontractors have a record of poor project performance with the Department.

b. Further, the Department maintains the right to disapprove the proposed Project scope and cost of professional services.

21. **Planning Projects**. For all planning projects or other aviation studies, the Agency assures that it will:

a. Execute the project per the approved project narrative or with approved modifications.

b. Furnish the Department with such periodic project and work activity reports as indicated in the approved scope of services.

c. Make such project materials available for public review, unless exempt from public disclosure.

1) Information related to airport security is considered restricted information and is exempt from public dissemination per Sections 119.071(3) and 331.22 F.S.
2) No materials prepared under this Agreement shall be subject to copyright in the United States or any other country.

d. Grant the Department unrestricted authority to publish, disclose, distribute, and otherwise use any of the material prepared in connection with this Agreement.

e. If the Project involves developing an Airport Master Plan or an Airport Layout Plan, and any updates thereto, it will be consistent with provisions of the Florida Aviation System Plan, will identify reasonable future growth of the airport and the Agency will comply with the Department airport master planning guidebook, including:

1) Provide copies, in electronic and editable format, of final Project materials to the Department, including computer-aided drafting (CAD) files of the Airport Layout Plan.
2) Develop a cost-feasible financial plan, approved by the Department, to accomplish the projects described in the Airport Master Plan or depicted in the Airport Layout Plan, and any updates thereto. The cost-feasible financial plan shall realistically assess Project phasing considering availability of state and local funding and federal funding under the FAA's priority system.
3) Enter all projects contained in the cost-feasible plan in the Joint Automated Capital Improvement Program (JACIP).

f. The Agency understands and agrees that Department approval of this Agreement or any planning material developed as part of this Agreement does not constitute or imply any assurance or commitment on the part of the Department to approve any pending or future application for state aviation funding.

g. The Agency will submit master planning draft and final deliverables for Department and, if required, FAA approval prior to submitting any invoices to the Department for payment.

22. Land Acquisition Projects. For the purchase of real property, the Agency assures that it will:

a. Laws. Acquire the land in accordance with federal and/or state laws governing such action.

b. Administration. Maintain direct control of Project administration, including:

1) Maintain responsibility for all related contract letting and administrative procedures related to the purchase of real property.
2) Secure written Department approval to execute each agreement for the purchase of real property with any third party.
3) Ensure a qualified, State-certified general appraiser provides all necessary services and documentation.
4) Furnish the Department with a projected schedule of events and a cash flow projection within 20 calendar days after completion of the review appraisal.
5) Establish a Project account for the purchase of the land.
6) Collect and disburse federal, state, and local project funds.

c. Reimbursable Funds. If funding conveyed by this Agreement is reimbursable for land purchase in accordance with Chapter 332, F.S., the Agency shall comply with the following requirements:

1) The Agency shall apply for a FAA Airport Improvement Program grant for the land purchase within 60 days of executing this Agreement.
2) If federal funds are received for the land purchase, the Agency shall notify the Department, in writing, within 14 calendar days of receiving the federal funds and is responsible for reimbursing the Department within 30 calendar days to achieve normal project federal, state, and local funding shares per Chapter 332, F.S.
3) If federal funds are not received for the land purchase, the Agency shall reimburse the Department within 30 calendar days after the reimbursable funds are due in order to achieve normal project state and local funding shares as described in Chapter 332, F.S.
4) If federal funds are not received for the land purchase and the state share of the purchase is less than or equal to normal state and local funding shares per Chapter 332, F.S., when reimbursable funds are due, no reimbursement to the Department shall be required.

d. New Airport. If this Project involves the purchase of real property for the development of a new airport, the Agency assures that it will:

1) Apply for federal and state funding to construct a paved runway, associated aircraft parking apron, and connecting taxiway within one year of the date of land purchase.
2) Complete an Airport Master Plan within two years of land purchase.
3) Complete airport construction for basic operation within 10 years of land purchase.

e. Use of Land. The Agency assures that it shall use the land for aviation purposes in accordance with the terms and assurances of this Agreement within 10 years of acquisition.

f. Disposal of Land. For the disposal of real property the Agency assures that it will comply with the following:
1) For land purchased for airport development or noise compatibility purposes, the Agency shall, when the land is no longer needed for such purposes, dispose of such land at fair market value and/or make available to the Department an amount equal to the state's proportionate share of its market value.

2) Land will be considered to be needed for airport purposes under this assurance if:

a) It serves aeronautical purposes such as a runway protection zone or as a noise buffer.
b) Revenue from uses of such land contributes to airport financial self-sufficiency.

3) Disposition of land under Sections D.22.f.1. or D.22.f.2. of this Exhibit, above, shall be subject to retention or reservation of any interest or right therein needed to ensure such land will only be used for purposes compatible with noise levels related to airport operations.
4) Revenues from the sale of such land must be accounted for as outlined in Section D.1. of this Exhibit, and expended as outlined in Section D.9. of this Exhibit.

23. Construction Projects. The Agency assures that it will:

a. Project Certifications. Certify Project compliances, including:

1) Consultant and contractor selection comply with all applicable federal, state and local laws, rules, regulations, and policies.
2) All design plans and specifications comply with federal, state, and professional standards and applicable FAA advisory circulars, as well as the minimum standards established by the Department for State of Florida licensing as a public-use airport.
3) Completed construction complies with all applicable local building codes.
4) Completed construction complies with the Project plans and specifications with certification of that fact by the Project Engineer.

b. Design Development. For the plans, specifications, construction contract documents, and any and all other engineering, construction, and contractual documents produced by the Engineer, which are hereinafter collectively referred to as "plans", the Engineer will certify that:

1) The plans shall be developed in accordance with sound engineering and design principles, and with generally accepted professional standards.
2) The plans shall be consistent with the intent of the Project as defined in Exhibit A and Exhibit B of this Agreement.
3) The Project Engineer shall perform a review of the certification requirements listed in Section B.2. of this Exhibit, Construction Certification, and make a determination as to their applicability to this Project.
4) Development of the plans shall comply with all applicable laws, ordinances, zoning and permitting requirements, public notice requirements, and other similar regulations.

c. Inspection and Approval. The Agency assures that:

1) The Agency will provide and maintain competent technical supervision at the construction site throughout the Project to assure that the work conforms to the plans, specifications, and schedules approved by the Department, as applicable, for the Project.
2) The Agency assures that it will allow the Department to inspect the work and that it will provide any cost and progress reporting, as may be required by the Department.
3) The Agency assures that it will take the appropriate corrective action necessary, as required by the Department, for work which does not conform to the Department standards.

d. Pavement Preventive Maintenance. The Agency assures that for a project involving replacement or reconstruction of runway or taxiway pavement it has implemented an airport pavement maintenance management program and that it will use such program for the useful life of any pavement constructed, reconstructed, or repaired with state financial assistance at the airport.

24. Noise Mitigation Projects. The Agency assures that it will:

a. Government Agreements. For all noise compatibility projects that are carried out by another unit of local government or are on property owned by a unit of local government other than the Agency, the Agency shall enter into an agreement with that government body.

1) The local agreement, satisfactory to the Department, shall obligate the unit of local government to the same terms and assurances that apply to the Agency.
2) The Agency assures that it will take steps to enforce the local agreement if there is substantial non-compliance with the terms of the local agreement.

b. Private Agreements. For noise compatibility projects on privately owned property:

1) The Agency shall enter into an agreement with the owner of that property to exclude future actions against the airport.
2) The Agency assures that it will take steps to enforce such agreement if there is substantial non-compliance with the terms of the agreement.

- End of Exhibit E -

Docusign Envelope ID: EBFDF60F-F2EE-4305-9C90-D6E520CBD296

Exhibit E1

PROGRAM SPECIFIC TERMS AND CONDITIONS

(Prohibition on Discrimination Based on Health Care Choices)

This exhibit forms an integral part of the Agreement between the Department and the Agency.

1. **Statutory Reference.** Section 339.08, F.S. and Section 381.00316, F.S.

2. **Statutory Compliance.** Pursuant to Section 339.08, F.S., the Department may not expend state funds to support a project or program of certain entities if the entity is found to be in violation of Section 381.00316, F.S. The Department shall withhold state funds until the entity is found to be in compliance with Section 381.00316, F.S. This shall apply to any of the following entities:

    a. A public transit provider as defined in s. 341.031(1), F.S.;
    b. An authority created pursuant to chapter 343, F.S., chapter 348, F.S., or chapter 349, F.S.; c. A public-use airport as defined in s. 332.004, F.S.; or
    d. A port listed in s. 311.09(1), F.S.

- End of Exhibit E1 -

EXHIBIT F

Contract Payment Requirements
Florida Department of Financial Services, Reference Guide for State Expenditures
Cost Reimbursement Contracts

Invoices for cost reimbursement contracts must be supported by an itemized listing of expenditures by category (salary, travel, expenses, etc.). Supporting documentation shall be submitted for each amount for which reimbursement is being claimed indicating that the item has been paid. Documentation for each amount for which reimbursement is being claimed must indicate that the item has been paid. Check numbers may be provided in lieu of copies of actual checks. Each piece of documentation should clearly reflect the dates of service. Only expenditures for categories in the approved agreement budget may be reimbursed. These expenditures must be allowable (pursuant to law) and directly related to the services being provided.

Listed below are types and examples of supporting documentation for cost reimbursement agreements:

(1) Salaries: A payroll register or similar documentation should be submitted. The payroll register should show gross salary charges, fringe benefits, other deductions and net pay. If an individual for whom reimbursement is being claimed is paid by the hour, a document reflecting the hours worked times the rate of pay will be acceptable.

(2) Fringe Benefits: Fringe Benefits should be supported by invoices showing the amount paid on behalf of the employee (e.g., insurance premiums paid). If the contract specifically states that fringe benefits will be based on a specified percentage rather than the actual cost of fringe benefits, then the calculation for the fringe benefits amount must be shown.

Exception: Governmental entities are not required to provide check numbers or copies of checks for fringe benefits.

(3) Travel: Reimbursement for travel must be in accordance with Section 112.061, Florida Statutes, which includes submission of the claim on the approved State travel voucher or electronic means.

(4) Other direct costs: Reimbursement will be made based on paid invoices/receipts. If nonexpendable property is purchased using State funds, the contract should include a provision for the transfer of the property to the State when services are terminated. Documentation must be provided to show compliance with Department of Management Services Rule 60A-1.017, Florida Administrative Code, regarding the requirements for contracts which include services and that provide for the contractor to purchase tangible personal property as defined in Section 273.02, Florida Statutes, for subsequent transfer to the State.

(5) In-house charges: Charges which may be of an internal nature (e.g., postage, copies, etc.) may be reimbursed on a usage log which shows the units times the rate being charged. The rates must be reasonable.

(6) Indirect costs: If the contract specifies that indirect costs will be paid based on a specified rate, then the calculation should be shown.

Contracts between state agencies, and/or contracts between universities may submit alternative documentation to substantiate the reimbursement request that may be in the form of FLAIR reports or other detailed reports.

The Florida Department of Financial Services, online Reference Guide for State Expenditures can be found at this web address https://www.myfloridacfo.com/Division/AA/Manuals/documents/ReferenceGuideforStateExpenditures.pdf.

Docusign Envelope ID: EBFDF60F-F2EE-4305-9C90-D6E520CBD296

EXHIBIT G

AUDIT REQUIREMENTS FOR AWARDS OF STATE FINANCIAL ASSISTANCE

THE STATE RESOURCES AWARDED PURSUANT TO THIS AGREEMENT CONSIST OF THE FOLLOWING:

SUBJECT TO SECTION 215.97, FLORIDA STATUTES:~

Awarding Agency: Florida Department of Transportation
State Project Title: Aviation Grant Program
CSFA Number: 55.004
***Award Amount:** $200,000

*The award amount may change with amendments

Specific project information for CSFA Number 55.004 is provided at: https://apps.fldfs.com/fsaa/searchCatalog.aspx

COMPLIANCE REQUIREMENTS APPLICABLE TO STATE RESOURCES AWARDED PURSUANT TO THIS AGREEMENT:

State Project Compliance Requirements for CSFA Number 55.004 are provided at: https://apps.fldfs.com/fsaa/searchCompliance.aspx

The State Projects Compliance Supplement is provided at: https://apps.fldfs.com/fsaa/compliance.aspx

To: Jennifer.Gaona@dot.state.fl.us

FLORIDA DEPARTMENT OF TRANSPORTATION
FUNDS APPROVAL

G3982

2/11/2025

CONTRACT INFORMATION

Contract:	G3982
Contract Type:	GD - GRANT DISBURSEMENT (GRANT)
Method of Procurement:	G - GOVERMENTAL AGENCY (287.057,F.S.)
Vendor Name:	CITY OF WINTER HAVEN
Vendor ID:	F596000453027
Beginning Date of This Agreement:	02/10/2025
Ending Date of This Agreement:	06/30/2026
Contract Total/Budgetary Ceiling:	ct = $200,000.00
Description:	Winter Haven Airport Replace Beacon & PAPI Units

FUNDS APPROVAL INFORMATION

FUNDS APPROVED/REVIEWED FOR JASON ADANK, CPA, COMPTROLLER ON 2/11/2025

Action:	Original
Reviewed or Approved:	APPROVED
Organization Code:	55012020129
Expansion Option:	A8
Object Code:	751000
Amount:	$200,000.00
Financial Project:	45194419401
Work Activity (FCT):	215
CFDA:	
Fiscal Year:	2025
Budget Entity:	55100100
Category/Category Year:	088719/25
Amendment ID:	O001
Sequence:	00
User Assigned ID:	
Enc Line (6s)/Status:	0001/04

Total Amount: $200,000.00

Docusign Envelope ID: EBFDF60F-F2EE-4305-9C90-D6E520CBD296

STATE OF FLORIDA DEPARTMENT OF TRANSPORTATION

PUBLIC TRANSPORTATION GRANT AGREEMENT

Form 725-000-01
STRATEGIC DEVELOPMENT
OGC 10/24

Financial Project Number(s): (item-segment-phase-sequence)		Fund(s):	DPTO	FLAIR Category:	088719
451944-1-94-01		Work Activity Code/Function:	215	Object Code:	751000
		Federal Award		Org. Code:	55012020129
		Identification Number (FAIN) – Transit only:	N/A	Vendor Number:	VF596000453002
Contract Number:	G3982	Federal Award Date:	N/A		
CFDA Number:	N/A	Agency UEI Number:			
CFDA Title:	N/A				
CSFA Number:	55.004				
CSFA Title:	Aviation Grant Program				

THIS PUBLIC TRANSPORTATION GRANT AGREEMENT ("Agreement") is entered into _____, by and between the State of Florida, Department of Transportation, ("Department"), and City of Winter Haven, ("Agency"). The Department and the Agency are sometimes referred to in this Agreement as a "Party" and collectively as the "Parties."

NOW, THEREFORE, in consideration of the mutual benefits to be derived from joint participation on the Project, the Parties agree to the following:

1. **Authority.** The Agency, by Resolution or other form of official authorization, a copy of which is attached as **Exhibit "D", Agency Resolution** and made a part of this Agreement, has authorized its officers to execute this Agreement on its behalf. The Department has the authority pursuant to Section(s) 332.007, Florida Statutes, to enter into this Agreement.

2. **Purpose of Agreement.** The purpose of this Agreement is to provide for the Department's participation in Winter Haven Airport Replace Beacon & PAPI Units, as further described in **Exhibit "A", Project Description and Responsibilities**, attached and incorporated into this Agreement ("Project"), to provide Department financial assistance to the Agency, state the terms and conditions upon which Department funds will be provided, and to set forth the manner in which the Project will be undertaken and completed.

3. **Program Area.** For identification purposes only, this Agreement is implemented as part of the Department program area selected below (select all programs that apply):

   X **Aviation**
   _ **Seaports**
   _ **Transit**
   _ **Intermodal**
   _ **Rail Crossing Closure**
   _ **Match to Direct Federal Funding** (Aviation or Transit)
   (Note: Section 15 and Exhibit G do not apply to federally matched funding)
   _ **Other**

4. **Exhibits.** The following Exhibits are attached and incorporated into this Agreement:

   X Exhibit A: Project Description and Responsibilities
   X Exhibit B: Schedule of Financial Assistance
   _ *Exhibit B1: Deferred Reimbursement Financial Provisions
   _ *Exhibit B2: Advance Payment Financial Provisions
   _ *Exhibit B3: Alternative Advanced Pay (Transit Bus Program)
   X *Exhibit C: Terms and Conditions of Construction
   X Exhibit D: Agency Resolution
   X Exhibit E: Program Specific Terms and Conditions
   X Exhibit E1: Prohibition Based on Health Care Choices
   _ Exhibit E2: Exterior Vehicle Wrap, Tinting, Paint, Marketing and Advertising (Transit)

Docusign Envelope ID: EBFDF60F-F2EE-4305-9C90-D6E520CBD296

X Exhibit F: Contract Payment Requirements
X *Exhibit G: Audit Requirements for Awards of State Financial Assistance
__ *Exhibit H: Audit Requirements for Awards of Federal Financial Assistance
__ *Exhibit I: Certification of Disbursement of Payment to Vehicle and/or Equipment Vendor
__ *Additional Exhibit(s):

*Indicates that the Exhibit is only attached and incorporated if applicable box is selected.

5. Time. Unless specified otherwise, all references to "days" within this Agreement refer to calendar days.

6. Term of Agreement. This Agreement shall commence upon full execution by both Parties ("Effective Date") and continue through June 30, 2026. If the Agency does not complete the Project within this time period, this Agreement will expire unless an extension of the time period is requested by the Agency and granted in writing by the Department prior to the expiration of this Agreement. Expiration of this Agreement will be considered termination of the Project. The cost of any work performed prior to the Effective Date or after the expiration date of this Agreement will not be reimbursed by the Department.

a. __ If this box is checked the following provision applies:

Unless terminated earlier, work on the Project shall commence no later than the __ day of __, or within __ days of the issuance of the Notice to Proceed for the construction phase of the Project (if the Project involves construction), whichever date is earlier. The Department shall have the option to immediately terminate this Agreement should the Agency fail to meet the above-required dates.

7. Amendments, Extensions, and Assignment. This Agreement may be amended or extended upon mutual written agreement of the Parties. This Agreement shall not be renewed. This Agreement shall not be assigned, transferred, or otherwise encumbered by the Agency under any circumstances without the prior written consent of the Department.

8. Termination or Suspension of Project. The Department may, by written notice to the Agency, suspend any or all of the Department's obligations under this Agreement for the Agency's failure to comply with applicable law or the terms of this Agreement until such time as the event or condition resulting in such suspension has ceased or been corrected.

a. Notwithstanding any other provision of this Agreement, if the Department intends to terminate the Agreement, the Department shall notify the Agency of such termination in writing at least thirty (30) days prior to the termination of the Agreement, with instructions to the effective date of termination or specify the stage of work at which the Agreement is to be terminated.

b. The Parties to this Agreement may terminate this Agreement when its continuation would not produce beneficial results commensurate with the further expenditure of funds. In this event, the Parties shall agree upon the termination conditions.

c. If the Agreement is terminated before performance is completed, the Agency shall be paid only for that work satisfactorily performed for which costs can be substantiated. Such payment, however, may not exceed the equivalent percentage of the Department's maximum financial assistance. If any portion of the Project is located on the Department's right-of-way, then all work in progress on the Department right-of-way will become the property of the Department and will be turned over promptly by the Agency.

d. In the event the Agency fails to perform or honor the requirements and provisions of this Agreement, the Agency shall promptly refund in full to the Department within thirty (30) days of the termination of the Agreement any funds that were determined by the Department to have been expended in violation of the Agreement.

Docusign Envelope ID: EBFDF60F-F2EE-4305-9C90-D6E520CBD296

e. The Department reserves the right to unilaterally cancel this Agreement for failure by the Agency to comply with the Public Records provisions of Chapter 119, Florida Statutes.

9. Project Cost:

a. The estimated total cost of the Project is $250,000. This amount is based upon **Exhibit "B", Schedule of Financial Assistance**. The timeline for deliverables and distribution of estimated amounts between deliverables within a grant phase, as outlined in **Exhibit "B", Schedule of Financial Assistance**, may be modified by mutual written agreement of the Parties and does not require execution of an **Amendment to the Public Transportation Grant Agreement**. The timeline for deliverables and distribution of estimated amounts between grant phases requires an amendment executed by both Parties in the same form as this Agreement.

b. The Department agrees to participate in the Project cost up to the maximum amount of $200,000 and, the Department's participation in the Project shall not exceed 80.00% of the total eligible cost of the Project, and as more fully described in **Exhibit "B'', Schedule of Financial Assistance**. The Agency agrees to bear all expenses in excess of the amount of the Department's participation and any cost overruns or deficits involved.

10. Compensation and Payment:

a. Eligible Cost. The Department shall reimburse the Agency for allowable costs incurred as described in **Exhibit "A"**, **Project Description and Responsibilities**, and as set forth in **Exhibit "B", Schedule of Financial Assistance**.

b. Deliverables. The Agency shall provide quantifiable, measurable, and verifiable units of deliverables. Each deliverable must specify the required minimum level of service to be performed and the criteria for evaluating successful completion. The Project and the quantifiable, measurable, and verifiable units of deliverables are described more fully in **Exhibit "A", Project Description and Responsibilities**. Modifications to the deliverables in **Exhibit "A", Project Description and Responsibilities** requires a formal written amendment.

c. Invoicing. Invoices shall be submitted no more often than monthly by the Agency in detail sufficient for a proper pre-audit and post-audit, based on the quantifiable, measurable, and verifiable deliverables as established in **Exhibit "A", Project Description and Responsibilities**. Deliverables and costs incurred must be received and approved by the Department prior to reimbursement. Requests for reimbursement by the Agency shall include an invoice, progress report, and supporting documentation for the deliverables being billed that are acceptable to the Department. The Agency shall use the format for the invoice and progress report that is approved by the Department.

d. Supporting Documentation. Supporting documentation must establish that the deliverables were received and accepted in writing by the Agency and must also establish that the required minimum standards or level of service to be performed based on the criteria for evaluating successful completion as specified in **Exhibit "A", Project Description and Responsibilities** has been met. All costs invoiced shall be supported by properly executed payrolls, time records, invoices, contracts, or vouchers evidencing in proper detail the nature and propriety of charges as described in **Exhibit "F", Contract Payment Requirements**.

e. Travel Expenses. The selected provision below is controlling regarding travel expenses:

X Travel expenses are NOT eligible for reimbursement under this Agreement.

__ Travel expenses ARE eligible for reimbursement under this Agreement. Bills for travel expenses specifically authorized in this Agreement shall be submitted on the Department's

Docusign Envelope ID: EBFDF60F-F2EE-4305-9C90-D6E520CBD296

Contractor Travel Form No. 300-000-06 and will be paid in accordance with Section 112.061, Florida Statutes, and the most current version of the Department's Disbursement Handbook for Employees and Managers.

f. Financial Consequences. Payment shall be made only after receipt and approval of deliverables and costs incurred unless advance payments are authorized by the Chief Financial Officer of the State of Florida under Chapters 215 and 216, Florida Statutes, or the Department's Comptroller under Section 334.044(29), Florida Statutes. If the Department determines that the performance of the Agency is unsatisfactory, the Department shall notify the Agency of the deficiency to be corrected, which correction shall be made within a time-frame to be specified by the Department. The Agency shall, within thirty (30) days after notice from the Department, provide the Department with a corrective action plan describing how the Agency will address all issues of contract non-performance, unacceptable performance, failure to meet the minimum performance levels, deliverable deficiencies, or contract non-compliance. If the corrective action plan is unacceptable to the Department, the Agency will not be reimbursed. If the deficiency is subsequently resolved, the Agency may bill the Department for the amount that was previously not reimbursed during the next billing period. If the Agency is unable to resolve the deficiency, the funds shall be forfeited at the end of the Agreement's term.

g. Invoice Processing. An Agency receiving financial assistance from the Department should be aware of the following time frames. Inspection or verification and approval of deliverables shall take no longer than 20 days from the Department's receipt of the invoice. The Department has 20 days to deliver a request for payment (voucher) to the Department of Financial Services. The 20 days are measured from the latter of the date the invoice is received or the deliverables are received, inspected or verified, and approved.

If a payment is not available within 40 days, a separate interest penalty at a rate as established pursuant to Section 55.03(1), Florida Statutes, will be due and payable, in addition to the invoice amount, to the Agency. Interest penalties of less than one (1) dollar will not be enforced unless the Agency requests payment. Invoices that have to be returned to an Agency because of Agency preparation errors will result in a delay in the payment. The invoice payment requirements do not start until a properly completed invoice is provided to the Department.

A Vendor Ombudsman has been established within the Department of Financial Services. The duties of this individual include acting as an advocate for Agency who may be experiencing problems in obtaining timely payment(s) from a state agency. The Vendor Ombudsman may be contacted at (850) 413-5516.

h. Records Retention. The Agency shall maintain an accounting system or separate accounts to ensure funds and projects are tracked separately. Records of costs incurred under the terms of this Agreement shall be maintained and made available upon request to the Department at all times during the period of this Agreement and for five years after final payment is made. Copies of these records shall be furnished to the Department upon request. Records of costs incurred include the Agency's general accounting records and the Project records, together with supporting documents and records, of the Contractor and all subcontractors performing work on the Project, and all other records of the Contractor and subcontractors considered necessary by the Department for a proper audit of costs.

i. Progress Reports. Upon request, the Agency agrees to provide progress reports to the Department in the standard format used by the Department and at intervals established by the Department. The Department will be entitled at all times to be advised, at its request, as to the status of the Project and of details thereof.

Docusign Envelope ID: EBFDF60F-F2EE-4305-9C90-D6E520CBD296

j. Submission of Other Documents. The Agency shall submit to the Department such data, reports, records, contracts, and other documents relating to the Project as the Department may require as listed in **Exhibit "E", Program Specific Terms and Conditions** attached to and incorporated into this Agreement.

k. Offsets for Claims. If, after Project completion, any claim is made by the Department resulting from an audit or for work or services performed pursuant to this Agreement, the Department may offset such amount from payments due for work or services done under any agreement that it has with the Agency owing such amount if, upon written demand, payment of the amount is not made within 60 days to the Department. Offsetting any amount pursuant to this paragraph shall not be considered a breach of contract by the Department.

l. Final Invoice. The Agency must submit the final invoice on the Project to the Department within 120 days after the completion of the Project. Invoices submitted after the 120-day time period may not be paid.

m. Department's Performance and Payment Contingent Upon Annual Appropriation by the Legislature. The Department's performance and obligation to pay under this Agreement is contingent upon an annual appropriation by the Legislature. If the Department's funding for this Project is in multiple fiscal years, a notice of availability of funds from the Department's project manager must be received prior to costs being incurred by the Agency. See **Exhibit "B", Schedule of Financial Assistance** for funding levels by fiscal year. Project costs utilizing any fiscal year funds are not eligible for reimbursement if incurred prior to funds approval being received. The Department will notify the Agency, in writing, when funds are available.

n. Limits on Contracts Exceeding $25,000 and Term more than 1 Year. In the event this Agreement is in excess of $25,000 and has a term for a period of more than one year, the provisions of Section 339.135(6)(a), Florida Statutes, are hereby incorporated:

> "The Department, during any fiscal year, shall not expend money, incur any liability, or enter into any contract which, by its terms, involves the expenditure of money in excess of the amounts budgeted as available for expenditure during such fiscal year. Any contract, verbal or written, made in violation of this subsection is null and void, and no money may be paid on such contract. The Department shall require a statement from the comptroller of the Department that funds are available prior to entering into any such contract or other binding commitment of funds. Nothing herein contained shall prevent the making of contracts for periods exceeding 1 year, but any contract so made shall be executory only for the value of the services to be rendered or agreed to be paid for in succeeding fiscal years; and this paragraph shall be incorporated verbatim in all contracts of the Department which are for an amount in excess of $25,000 and which have a term for a period of more than 1 year."

o. Agency Obligation to Refund Department. Any Project funds made available by the Department pursuant to this Agreement that are determined by the Department to have been expended by the Agency in violation of this Agreement or any other applicable law or regulation shall be promptly refunded in full to the Department. Acceptance by the Department of any documentation or certifications, mandatory or otherwise permitted, that the Agency files shall not constitute a waiver of the Department's rights as the funding agency to verify all information at a later date by audit or investigation.

p. Non-Eligible Costs. In determining the amount of the payment, the Department will exclude all Project costs incurred by the Agency prior to the execution of this Agreement, costs incurred after the expiration of the Agreement, costs that are not provided for in **Exhibit "A"**, **Project**

Docusign Envelope ID: EBFDF60F-F2EE-4305-9C90-D6E520CBD296

Description and Responsibilities, and as set forth in **Exhibit "B", Schedule of Financial Assistance**, costs agreed to be borne by the Agency or its contractors and subcontractors for not meeting the Project commencement and final invoice time lines, and costs attributable to goods or services received under a contract or other arrangement that has not been approved in writing by the Department. Specific unallowable costs may be listed in **Exhibit "A"**, **Project Description and Responsibilities.**

11. **General Requirements.** The Agency shall complete the Project with all practical dispatch in a sound, economical, and efficient manner, and in accordance with the provisions in this Agreement and all applicable laws.

    a. **Necessary Permits Certification.** The Agency shall certify to the Department that the Agency's design consultant and/or construction contractor has secured the necessary permits.

    b. **Right-of-Way Certification.** If the Project involves construction, then the Agency shall provide to the Department certification and a copy of appropriate documentation substantiating that all required right-of-way necessary for the Project has been obtained. Certification is required prior to authorization for advertisement for or solicitation of bids for construction of the Project, even if no right-of-way is required.

    c. **Notification Requirements When Performing Construction on Department's Right-of-Way.** In the event the cost of the Project is greater than $250,000.00, and the Project involves construction on the Department's right-of-way, the Agency shall provide the Department with written notification of either its intent to:

        i. Require the construction work of the Project that is on the Department's right-of-way to be performed by a Department prequalified contractor, or

        ii. Construct the Project utilizing existing Agency employees, if the Agency can complete said Project within the time frame set forth in this Agreement.

    d. __ If this box is checked, then the Agency is permitted to utilize its own forces and the following provision applies: **Use of Agency Workforce.** In the event the Agency proceeds with any phase of the Project utilizing its own forces, the Agency will only be reimbursed for direct costs (this excludes general overhead).

    e. __ If this box is checked, then the Agency is permitted to utilize **Indirect Costs: Reimbursement for Indirect Program Expenses** (select one):

        i. __ Agency has selected to seek reimbursement from the Department for actual indirect expenses (no rate).

        ii. __ Agency has selected to apply a de minimus rate of 10% to modified total direct costs. Note: The de minimus rate is available only to entities that have never had a negotiated indirect cost rate. When selected, the de minimus rate must be used consistently for all federal awards until such time the agency chooses to negotiate a rate. A cost policy statement and de minimis certification form must be submitted to the Department for review and approval.

        iii. __ Agency has selected to apply a state or federally approved indirect cost rate. A federally approved rate agreement or indirect cost allocation plan (ICAP) must be submitted annually.

    f. **Agency Compliance with Laws, Rules, and Regulations, Guidelines, and Standards.** The Agency shall comply and require its contractors and subcontractors to comply with all terms

Docusign Envelope ID: EBFDF60F-F2EE-4305-9C90-D6E520CBD296

and conditions of this Agreement and all federal, state, and local laws and regulations applicable to this Project.

g. **Claims and Requests for Additional Work.** The Agency shall have the sole responsibility for resolving claims and requests for additional work for the Project. The Agency will make best efforts to obtain the Department's input in its decisions. The Department is not obligated to reimburse for claims or requests for additional work.

12. Contracts of the Agency:

a. **Approval of Third Party Contracts.** The Department specifically reserves the right to review and approve any and all third party contracts with respect to the Project before the Agency executes or obligates itself in any manner requiring the disbursement of Department funds, including consultant and purchase of commodities contracts, or amendments thereto. If the Department chooses to review and approve third party contracts for this Project and the Agency fails to obtain such approval, that shall be sufficient cause for nonpayment by the Department. The Department specifically reserves unto itself the right to review the qualifications of any consultant or contractor and to approve or disapprove the employment of the same. If Federal Transit Administration (FTA) funds are used in the Project, the Department must exercise the right to third party contract review.

b. **Procurement of Commodities or Contractual Services.** It is understood and agreed by the Parties hereto that participation by the Department in a project with the Agency, where said project involves the purchase of commodities or contractual services where purchases or costs exceed the Threshold Amount for CATEGORY TWO per Section 287.017, Florida Statutes, is contingent on the Agency complying in full with the provisions of Section 287.057, Florida Statutes. The Agency's Authorized Official shall certify to the Department that the Agency's purchase of commodities or contractual services has been accomplished in compliance with Section 287.057, Florida Statutes. It shall be the sole responsibility of the Agency to ensure that any obligations made in accordance with this Section comply with the current threshold limits. Contracts, purchase orders, task orders, construction change orders, or any other agreement that would result in exceeding the current budget contained in **Exhibit "B", Schedule of Financial Assistance**, or that is not consistent with the Project description and scope of services contained in **Exhibit "A", Project Description and Responsibilities** must be approved by the Department prior to Agency execution. Failure to obtain such approval, and subsequent execution of an amendment to the Agreement if required, shall be sufficient cause for nonpayment by the Department, in accordance with this Agreement.

c. **Consultants' Competitive Negotiation Act.** It is understood and agreed by the Parties to this Agreement that participation by the Department in a project with the Agency, where said project involves a consultant contract for professional services, is contingent on the Agency's full compliance with provisions of Section 287.055, Florida Statutes, Consultants' Competitive Negotiation Act. In all cases, the Agency's Authorized Official shall certify to the Department that selection has been accomplished in compliance with the Consultants' Competitive Negotiation Act.

d. **Disadvantaged Business Enterprise (DBE) Policy and Obligation.** It is the policy of the Department that DBEs, as defined in 49 C.F.R. Part 26, as amended, shall have the opportunity to participate in the performance of contracts financed in whole or in part with Department funds under this Agreement. The DBE requirements of applicable federal and state laws and regulations apply to this Agreement. The Agency and its contractors agree to ensure that DBEs have the opportunity to participate in the performance of this Agreement. In this regard, all recipients and contractors shall take all necessary and reasonable steps in accordance with applicable federal and state laws and regulations to ensure that the DBEs have the opportunity to compete for and perform contracts. The Agency and its contractors

Docusign Envelope ID: EBFDF60F-F2EE-4305-9C90-D6E520CBD296

and subcontractors shall not discriminate on the basis of race, color, national origin or sex in the award and performance of contracts, entered pursuant to this Agreement.

13. **Maintenance Obligations**. In the event the Project includes construction or the acquisition of commodities then the following provisions are incorporated into this Agreement:

    a. The Agency agrees to accept all future maintenance and other attendant costs occurring after completion of the Project for all improvements constructed or commodities acquired as part of the Project. The terms of this provision shall survive the termination of this Agreement.

14. **Sale, Transfer, or Disposal of Department-funded Property:**

    a. The Agency will not sell or otherwise transfer or dispose of any part of its title or other interests in real property, facilities, or equipment funded in any part by the Department under this Agreement without prior written approval by the Department.

    b. If a sale, transfer, or disposal by the Agency of all or a portion of Department-funded real property, facilities, or equipment is approved by the Department, the following provisions will apply:

        i. The Agency shall reimburse the Department a proportional amount of the proceeds of the sale of any Department-funded property.

        ii. The proportional amount shall be determined on the basis of the ratio of the Department funding of the development or acquisition of the property multiplied against the sale amount, and shall be remitted to the Department within ninety (90) days of closing of sale.

        iii. Sale of property developed or acquired with Department funds shall be at market value as determined by appraisal or public bidding process, and the contract and process for sale must be approved in advance by the Department.

        iv. If any portion of the proceeds from the sale to the Agency are non-cash considerations, reimbursement to the Department shall include a proportional amount based on the value of the non-cash considerations.

    c. The terms of provisions “a” and “b” above shall survive the termination of this Agreement.

        i. The terms shall remain in full force and effect throughout the useful life of facilities developed, equipment acquired, or Project items installed within a facility, but shall not exceed twenty (20) years from the effective date of this Agreement.

        ii. There shall be no limit on the duration of the terms with respect to real property acquired with Department funds.

15. **Single Audit.** The administration of Federal or State resources awarded through the Department to the Agency by this Agreement may be subject to audits and/or monitoring by the Department. The following requirements do not limit the authority of the Department to conduct or arrange for the conduct of additional audits or evaluations of Federal awards or State financial assistance or limit the authority of any state agency inspector general, the State of Florida Auditor General, or any other state official. The Agency shall comply with all audit and audit reporting requirements as specified below.

    Federal Funded:

    a. In addition to reviews of audits conducted in accordance with 2 CFR Part 200, Subpart F – Audit Requirements, monitoring procedures may include but not be limited to on-site visits by

Docusign Envelope ID: EBFDF60F-F2EE-4305-9C90-D6E520CBD296

Department staff and/or other procedures, including reviewing any required performance and financial reports, following up, ensuring corrective action, and issuing management decisions on weaknesses found through audits when those findings pertain to Federal awards provided through the Department by this Agreement. By entering into this Agreement, the Agency agrees to comply and cooperate fully with any monitoring procedures/processes deemed appropriate by the Department. The Agency further agrees to comply and cooperate with any inspections, reviews, investigations, or audits deemed necessary by the Department, State of Florida Chief Financial Officer (CFO), or State of Florida Auditor General.

b. The Agency, a non-Federal entity as defined by 2 CFR Part 200, Subpart F – Audit Requirements, as a subrecipient of a Federal award awarded by the Department through this Agreement, is subject to the following requirements:

i. In the event the Agency expends a total amount of Federal awards equal to or in excess of the threshold established by 2 CFR Part 200, Subpart F – Audit Requirements, the Agency must have a Federal single or program-specific audit conducted for such fiscal year in accordance with the provisions of 2 CFR Part 200, Subpart F – Audit Requirements. **Exhibit "H", Audit Requirements for Awards of Federal Financial Assistance**, to this Agreement provides the required Federal award identification information needed by the Agency to further comply with the requirements of 2 CFR Part 200, Subpart F – Audit Requirements. In determining Federal awards expended in a fiscal year, the Agency must consider all sources of Federal awards based on when the activity related to the Federal award occurs, including the Federal award provided through the Department by this Agreement. The determination of amounts of Federal awards expended should be in accordance with the guidelines established by 2 CFR Part 200, Subpart F – Audit Requirements. An audit conducted by the State of Florida Auditor General in accordance with the provisions of 2 CFR Part 200, Subpart F – Audit Requirements, will meet the requirements of this part.

ii. In connection with the audit requirements, the Agency shall fulfill the requirements relative to the auditee responsibilities as provided in 2 CFR Part 200, Subpart F – Audit Requirements.

iii. In the event the Agency expends less than the threshold established by 2 CFR Part 200, Subpart F – Audit Requirements, in Federal awards, the Agency is exempt from Federal audit requirements for that fiscal year. However, the Agency must provide a single audit exemption statement to the Department at FDOTSingleAudit@dot.state.fl.us no later than nine months after the end of the Agency's audit period for each applicable audit year. In the event the Agency expends less than the threshold established by 2 CFR Part 200, Subpart F – Audit Requirements, in Federal awards in a fiscal year and elects to have an audit conducted in accordance with the provisions of 2 CFR Part 200, Subpart F – Audit Requirements, the cost of the audit must be paid from non-Federal resources (*i.e.*, the cost of such an audit must be paid from the Agency's resources obtained from other than Federal entities).

iv. The Agency must electronically submit to the Federal Audit Clearinghouse (FAC) at https://harvester.census.gov/facweb/ the audit reporting package as required by 2 CFR Part 200, Subpart F – Audit Requirements, within the earlier of 30 calendar days after receipt of the auditor's report(s) or nine months after the end of the audit period. The FAC is the repository of record for audits required by 2 CFR Part 200, Subpart F – Audit Requirements. However, the Department requires a copy of the audit reporting package also be submitted to FDOTSingleAudit@dot.state.fl.us within the earlier of 30 calendar days after receipt of the auditor's report(s) or nine months after the end of the audit period as required by 2 CFR Part 200, Subpart F – Audit Requirements.

Docusign Envelope ID: EBFDF60F-F2EE-4305-9C90-D6E520CBD296

v. Within six months of acceptance of the audit report by the FAC, the Department will review the Agency's audit reporting package, including corrective action plans and management letters, to the extent necessary to determine whether timely and appropriate action on all deficiencies has been taken pertaining to the Federal award provided through the Department by this Agreement. If the Agency fails to have an audit conducted in accordance with 2 CFR Part 200, Subpart F – Audit Requirements, the Department may impose additional conditions to remedy noncompliance. If the Department determines that noncompliance cannot be remedied by imposing additional conditions, the Department may take appropriate actions to enforce compliance, which actions may include but not be limited to the following:

1. Temporarily withhold cash payments pending correction of the deficiency by the Agency or more severe enforcement action by the Department;
2. Disallow (deny both use of funds and any applicable matching credit for) all or part of the cost of the activity or action not in compliance;
3. Wholly or partly suspend or terminate the Federal award;
4. Initiate suspension or debarment proceedings as authorized under 2 C.F.R. Part 180 and Federal awarding agency regulations (or in the case of the Department, recommend such a proceeding be initiated by the Federal awarding agency);
5. Withhold further Federal awards for the Project or program;
6. Take other remedies that may be legally available.

vi. As a condition of receiving this Federal award, the Agency shall permit the Department or its designee, the CFO, or State of Florida Auditor General access to the Agency's records, including financial statements, the independent auditor's working papers, and project records as necessary. Records related to unresolved audit findings, appeals, or litigation shall be retained until the action is complete or the dispute is resolved.

vii. The Department's contact information for requirements under this part is as follows:

Office of Comptroller, MS 24
605 Suwannee Street
Tallahassee, Florida 32399-0450
FDOTSingleAudit@dot.state.fl.us

State Funded:

a. In addition to reviews of audits conducted in accordance with Section 215.97, Florida Statutes, monitoring procedures to monitor the Agency's use of state financial assistance may include but not be limited to on-site visits by Department staff and/or other procedures, including reviewing any required performance and financial reports, following up, ensuring corrective action, and issuing management decisions on weaknesses found through audits when those findings pertain to state financial assistance awarded through the Department by this Agreement. By entering into this Agreement, the Agency agrees to comply and cooperate fully with any monitoring procedures/processes deemed appropriate by the Department. The Agency further agrees to comply and cooperate with any inspections, reviews, investigations, or audits deemed necessary by the Department, the Department of Financial Services (DFS), or State of Florida Auditor General.

b. The Agency, a "nonstate entity" as defined by Section 215.97, Florida Statutes, as a recipient of state financial assistance awarded by the Department through this Agreement, is subject to the following requirements:

Docusign Envelope ID: EBFDF60F-F2EE-4305-9C90-D6E520CBD296

i. In the event the Agency meets the audit threshold requirements established by Section 215.97, Florida Statutes, the Agency must have a State single or project-specific audit conducted for such fiscal year in accordance with Section 215.97, Florida Statutes; applicable rules of the Department of Financial Services; and Chapters 10.550 (local governmental entities) or 10.650 (nonprofit and for-profit organizations), Rules of the Auditor General. **Exhibit "G", Audit Requirements for Awards of State Financial Assistance,** to this Agreement indicates state financial assistance awarded through the Department by this Agreement needed by the Agency to further comply with the requirements of Section 215.97, Florida Statutes. In determining the state financial assistance expended in a fiscal year, the Agency shall consider all sources of state financial assistance, including state financial assistance received from the Department by this Agreement, other state agencies, and other nonstate entities. State financial assistance does not include Federal direct or pass-through awards and resources received by a nonstate entity for Federal program matching requirements.

ii. In connection with the audit requirements, the Agency shall ensure that the audit complies with the requirements of Section 215.97(8), Florida Statutes. This includes submission of a financial reporting package as defined by Section 215.97(2)(e), Florida Statutes, and Chapters 10.550 (local governmental entities) or 10.650 (nonprofit and for-profit organizations), Rules of the Auditor General.

iii. In the event the Agency does not meet the audit threshold requirements established by Section 215.97, Florida Statutes, the Agency is exempt for such fiscal year from the state single audit requirements of Section 215.97, Florida Statutes. However, the Agency must provide a single audit exemption statement to the Department at FDOTSingleAudit@dot.state.fl.us no later than nine months after the end of the Agency's audit period for each applicable audit year. In the event the Agency does not meet the audit threshold requirements established by Section 215.97, Florida Statutes, in a fiscal year and elects to have an audit conducted in accordance with the provisions of Section 215.97, Florida Statutes, the cost of the audit must be paid from the Agency's resources (*i.e.*, the cost of such an audit must be paid from the Agency's resources obtained from other than State entities).

iv. In accordance with Chapters 10.550 (local governmental entities) or 10.650 (nonprofit and for-profit organizations), Rules of the Auditor General, copies of financial reporting packages required by this Agreement shall be submitted to:

Florida Department of Transportation
Office of Comptroller, MS 24
605 Suwannee Street
Tallahassee, Florida 32399-0405
FDOTSingleAudit@dot.state.fl.us

And

State of Florida Auditor General
Local Government Audits/342
111 West Madison Street, Room 401
Tallahassee, FL 32399-1450
Email: flaudgen_localgovt@aud.state.fl.us

v. Any copies of financial reporting packages, reports, or other information required to be submitted to the Department shall be submitted timely in accordance with Section 215.97, Florida Statutes, and Chapters 10.550 (local governmental entities) or 10.650 (nonprofit and for-profit organizations), Rules of the Auditor General, as

Docusign Envelope ID: EBFDF60F-F2EE-4305-9C90-D6E520CBD296

applicable.

vi. The Agency, when submitting financial reporting packages to the Department for audits done in accordance with Chapters 10.550 (local governmental entities) or 10.650 (nonprofit and for-profit organizations), Rules of the Auditor General, should indicate the date the reporting package was delivered to the Agency in correspondence accompanying the reporting package.

vii. Upon receipt, and within six months, the Department will review the Agency's financial reporting package, including corrective action plans and management letters, to the extent necessary to determine whether timely and appropriate corrective action on all deficiencies has been taken pertaining to the state financial assistance provided through the Department by this Agreement. If the Agency fails to have an audit conducted consistent with Section 215.97, Florida Statutes, the Department may take appropriate corrective action to enforce compliance.

viii. As a condition of receiving state financial assistance, the Agency shall permit the Department or its designee, DFS, or the Auditor General access to the Agency's records, including financial statements, the independent auditor's working papers, and project records as necessary. Records related to unresolved audit findings, appeals, or litigation shall be retained until the action is complete or the dispute is resolved.

c. The Agency shall retain sufficient records demonstrating its compliance with the terms of this Agreement for a period of five years from the date the audit report is issued and shall allow the Department or its designee, DFS, or State of Florida Auditor General access to such records upon request. The Agency shall ensure that the audit working papers are made available to the Department or its designee, DFS, or State of Florida Auditor General upon request for a period of five years from the date the audit report is issued, unless extended in writing by the Department.

16. Notices and Approvals. Notices and approvals referenced in this Agreement must be obtained in writing from the Parties' respective Administrators or their designees.

17. Restrictions, Prohibitions, Controls and Labor Provisions:

a. Convicted Vendor List. A person or affiliate who has been placed on the convicted vendor list following a conviction for a public entity crime may not submit a bid on a contract to provide any goods or services to a public entity; may not submit a bid on a contract with a public entity for the construction or repair of a public building or public work; may not submit bids on leases of real property to a public entity; may not be awarded or perform work as a contractor, supplier, subcontractor, or consultant under a contract with any public entity; and may not transact business with any public entity in excess of the threshold amount provided in Section 287.017, Florida Statutes, for CATEGORY TWO for a period of 36 months from the date of being placed on the convicted vendor list.

b. Discriminatory Vendor List. In accordance with Section 287.134, Florida Statutes, an entity or affiliate who has been placed on the Discriminatory Vendor List, kept by the Florida Department of Management Services, may not submit a bid on a contract to provide goods or services to a public entity; may not submit a bid on a contract with a public entity for the construction or repair of a public building or public work; may not submit bids on leases of real property to a public entity; may not be awarded or perform work as a contractor, supplier, subcontractor, or consultant under a contract with any public entity; and may not transact business with any public entity.

Docusign Envelope ID: EBFDF60F-F2EE-4305-9C90-D6E520CBD296

c. Non-Responsible Contractors. An entity or affiliate who has had its Certificate of Qualification suspended, revoked, denied, or have further been determined by the Department to be a non-responsible contractor, may not submit a bid or perform work for the construction or repair of a public building or public work on a contract with the Agency.

d. Prohibition on Using Funds for Lobbying. No funds received pursuant to this Agreement may be expended for lobbying the Florida Legislature, judicial branch, or any state agency, in accordance with Section 216.347, Florida Statutes.

e. Unauthorized Aliens. The Department shall consider the employment by any contractor of unauthorized aliens a violation of Section 274A(e) of the Immigration and Nationality Act. If the contractor knowingly employs unauthorized aliens, such violation will be cause for unilateral cancellation of this Agreement.

f. Procurement of Construction Services. If the Project is procured pursuant to Chapter 255, Florida Statutes, for construction services and at the time of the competitive solicitation for the Project, 50 percent or more of the cost of the Project is to be paid from state-appropriated funds, then the Agency must comply with the requirements of Section 255.0991, Florida Statutes.

g. E-Verify. The Agency shall:

i. Utilize the U.S. Department of Homeland Security's E-Verify system to verify the employment eligibility of all new employees hired by the Agency during the term of the contract; and

ii. Expressly require any subcontractors performing work or providing services pursuant to the state contract to likewise utilize the U.S. Department of Homeland Security's E-Verify system to verify the employment eligibility of all new employees hired by the subcontractor during the contract term.

h. Projects with Non-profit Organizations. Pursuant to Section 216.1366. Florida Statutes, if the Agency is a nonprofit organization as defined in Section 215.97(2)(m), Florida Statutes, the Agency shall provide documentation to indicate the amount of state funds:

i. Allocated to be used during the full term of this Agreement for remuneration to any member of the board of directors or an officer of the Agency

ii. Allocated under each payment by the Department to be used for remuneration of any member of the board of directors or an officer of the Agency. The documentation must indicate the amounts and recipients of the remuneration.

Such information will be posted by the Department to the Florida Accountability Contract Tracking System maintained pursuant to Section 215.985, F.S., and must additionally be posted to the Agency's website, if the Agency is a non-profit organization and maintains a website. The Agency shall utilize the Department's Form 350-090-19, Compensation to Non-Profits Using State Funds, for purposes of documenting the compensation. The subject Form is required for every contract for services executed, amended, or extended on or after July 1, 2023, with non-profit organizations.

Pursuant to Section 216.1366, F.S., the term:

iii. "Officer" means a chief executive officer, chief financial officer, chief operating officer, or any other position performing and equivalent function.

iv. "Remuneration" means all compensation earned by or awarded to personnel, whether paid or accrued, regardless of contingency, including bonuses, accrued paid time off,

Docusign Envelope ID: EBFDF60F-F2EE-4305-9C90-D6E520CBD296

severance payments, incentive payments, contributions to a retirement plan or in-kind payments, reimbursements, or allowances for moving expenses, vehicles and other transportation, telephone services, medical services, housing and meals.

v. "State Funds" means funds paid from the General Revenue Fund or any state trust fund, funds allocated by the Federal Government and distributed by the state, or funds appropriated by the Federal Government and distributed by the state, or funds appropriated by the state fo distribution through any grant program. The term does not include funds used for the Medicaid program.

i. Design Services and Construction Engineering and Inspection Services. If the Project is wholly or partially funded by the Department and administered by a local governmental entity, except for a seaport listed in Section 311.09, Florida Statutes, or an airport as defined in Section 332.004, Florida Statutes, the entity performing design and construction engineering and inspection services may not be the same entity.

18. Indemnification and Insurance:

a. It is specifically agreed between the Parties executing this Agreement that it is not intended by any of the provisions of any part of this Agreement to create in the public or any member thereof, a third party beneficiary under this Agreement, or to authorize anyone not a party to this Agreement to maintain a suit for personal injuries or property damage pursuant to the terms or provisions of this Agreement. The Agency guarantees the payment of all just claims for materials, supplies, tools, or labor and other just claims against the Agency or any subcontractor, in connection with this Agreement. Additionally, to the extent permitted by law and as limited by and pursuant to the provisions of Section 768.28, Florida Statutes, the Agency shall indemnify, defend, and hold harmless the State of Florida, Department of Transportation, including the Department's officers and employees, from liabilities, damages, losses, and costs, including, but not limited to, reasonable attorney's fees, to the extent caused by the negligence, recklessness, or intentional wrongful misconduct of the Agency and persons employed or utilized by the Agency in the performance of this Agreement. Nothing contained in this paragraph is intended to nor shall it constitute a waiver of the Department's or the Agency's sovereign immunity. Nothing contained in this paragraph is intended to nor shall it constitute a waiver of the Department's or the Agency's sovereign immunity. This indemnification shall survive the termination of this Agreement. Additionally, the Agency agrees to include the following indemnification in all contracts with contractors/subcontractors and consultants/subconsultants who perform work in connection with this Agreement:

"To the fullest extent permitted by law, the Agency's contractor/consultant shall indemnify, defend, and hold harmless the Agency and the State of Florida, Department of Transportation, including the Department's officers and employees, from liabilities, damages, losses and costs, including, but not limited to, reasonable attorney's fees, to the extent caused by the negligence, recklessness or intentional wrongful misconduct of the contractor/consultant and persons employed or utilized by the contractor/consultant in the performance of this Agreement.

This indemnification shall survive the termination of this Agreement."

b. The Agency shall provide Workers' Compensation Insurance in accordance with Florida's Workers' Compensation law for all employees. If subletting any of the work, ensure that the subcontractor(s) and subconsultant(s) have Workers' Compensation Insurance for their employees in accordance with Florida's Workers' Compensation law. If using "leased employees" or employees obtained through professional employer organizations ("PEO's"), ensure that such employees are covered by Workers' Compensation Insurance through the PEO's or other leasing entities. Ensure that any equipment rental agreements that include

Docusign Envelope ID: EBFDF60F-F2EE-4305-9C90-D6E520CBD296

operators or other personnel who are employees of independent contractors, sole proprietorships, or partners are covered by insurance required under Florida's Workers' Compensation law.

c. If the Agency elects to self-perform the Project, then the Agency may self-insure. If the Agency elects to hire a contractor or consultant to perform the Project, then the Agency shall carry, or cause its contractor or consultant to carry, Commercial General Liability insurance providing continuous coverage for all work or operations performed under this Agreement. Such insurance shall be no more restrictive than that provided by the latest occurrence form edition of the standard Commercial General Liability Coverage Form (ISO Form CG 00 01) as filed for use in the State of Florida. The Agency shall cause, or cause its contractor or consultant to cause, the Department to be made an Additional Insured as to such insurance. Such coverage shall be on an "occurrence" basis and shall include Products/Completed Operations coverage. The coverage afforded to the Department as an Additional Insured shall be primary as to any other available insurance and shall not be more restrictive than the coverage afforded to the Named Insured. The limits of coverage shall not be less than $1,000,000 for each occurrence and not less than a $5,000,000 annual general aggregate, inclusive of amounts provided by an umbrella or excess policy. The limits of coverage described herein shall apply fully to the work or operations performed under the Agreement, and may not be shared with or diminished by claims unrelated to the Agreement. The policy/ies and coverage described herein may be subject to a deductible and such deductibles shall be paid by the Named Insured. No policy/ies or coverage described herein may contain or be subject to a Retention or a Self-Insured Retention unless the Agency is a state agency or subdivision of the State of Florida that elects to self-perform the Project. Prior to the execution of the Agreement, and at all renewal periods which occur prior to final acceptance of the work, the Department shall be provided with an ACORD Certificate of Liability Insurance reflecting the coverage described herein. The Department shall be notified in writing within ten days of any cancellation, notice of cancellation, lapse, renewal, or proposed change to any policy or coverage described herein. The Department's approval or failure to disapprove any policy/ies, coverage, or ACORD Certificates shall not relieve or excuse any obligation to procure and maintain the insurance required herein, nor serve as a waiver of any rights or defenses the Department may have.

d. When the Agreement includes the construction of a railroad grade crossing, railroad overpass or underpass structure, or any other work or operations within the limits of the railroad right-of-way, including any encroachments thereon from work or operations in the vicinity of the railroad right-of-way, the Agency shall, or cause its contractor to, in addition to the insurance coverage required above, procure and maintain Railroad Protective Liability Coverage (ISO Form CG 00 35) where the railroad is the Named Insured and where the limits are not less than $2,000,000 combined single limit for bodily injury and/or property damage per occurrence, and with an annual aggregate limit of not less than $6,000,000. The railroad shall also be added along with the Department as an Additional Insured on the policy/ies procured pursuant to the paragraph above. Prior to the execution of the Agreement, and at all renewal periods which occur prior to final acceptance of the work, both the Department and the railroad shall be provided with an ACORD Certificate of Liability Insurance reflecting the coverage described herein. The insurance described herein shall be maintained through final acceptance of the work. Both the Department and the railroad shall be notified in writing within ten days of any cancellation, notice of cancellation, renewal, or proposed change to any policy or coverage described herein. The Department's approval or failure to disapprove any policy/ies, coverage, or ACORD Certificates shall not relieve or excuse any obligation to procure and maintain the insurance required herein, nor serve as a waiver of any rights the Department may have.

e. When the Agreement involves work on or in the vicinity of utility-owned property or facilities, the utility shall be added along with the Department as an Additional Insured on the Commercial General Liability policy/ies procured above.

Docusign Envelope ID: EBFDF60F-F2EE-4305-9C90-D6E520CBD296

19. Miscellaneous:

a. Environmental Regulations. The Agency will be solely responsible for compliance with all applicable environmental regulations and for any liability arising from non-compliance with these regulations, and will reimburse the Department for any loss incurred in connection therewith.

b. Non-Admission of Liability. In no event shall the making by the Department of any payment to the Agency constitute or be construed as a waiver by the Department of any breach of covenant or any default which may then exist on the part of the Agency and the making of such payment by the Department, while any such breach or default shall exist, shall in no way impair or prejudice any right or remedy available to the Department with respect to such breach or default.

c. Severability. If any provision of this Agreement is held invalid, the remainder of this Agreement shall not be affected. In such an instance, the remainder would then continue to conform to the terms and requirements of applicable law.

d. Agency not an agent of Department. The Agency and the Department agree that the Agency, its employees, contractors, subcontractors, consultants, and subconsultants are not agents of the Department as a result of this Agreement.

e. Bonus or Commission. By execution of the Agreement, the Agency represents that it has not paid and, also agrees not to pay, any bonus or commission for the purpose of obtaining an approval of its application for the financing hereunder.

f. Non-Contravention of State Law. Nothing in the Agreement shall require the Agency to observe or enforce compliance with any provision or perform any act or do any other thing in contravention of any applicable state law. If any of the provisions of the Agreement violate any applicable state law, the Agency will at once notify the Department in writing so that appropriate changes and modifications may be made by the Department and the Agency to the end that the Agency may proceed as soon as possible with the Project.

g. Execution of Agreement. This Agreement may be executed in one or more counterparts, each of which shall be deemed an original, but all of which shall constitute the same Agreement. A facsimile or electronic transmission of this Agreement with a signature on behalf of a party will be legal and binding on such party.

h. Federal Award Identification Number (FAIN). If the FAIN is not available prior to execution of the Agreement, the Department may unilaterally add the FAIN to the Agreement without approval of the Agency and without an amendment to the Agreement. If this occurs, an updated Agreement that includes the FAIN will be provided to the Agency and uploaded to the Department of Financial Services' Florida Accountability Contract Tracking System (FACTS).

i. Inspector General Cooperation. The Agency agrees to comply with Section 20.055(5), Florida Statutes, and to incorporate in all subcontracts the obligation to comply with Section 20.055(5), Florida Statutes.

j. Law, Forum, and Venue. This Agreement shall be governed by and construed in accordance with the laws of the State of Florida. In the event of a conflict between any portion of the contract and Florida law, the laws of Florida shall prevail. The Agency agrees to waive forum and venue and that the Department shall determine the forum and venue in which any dispute under this Agreement is decided.

IN WITNESS WHEREOF, the Parties have executed this Agreement on the day and year written above.

Docusign Envelope ID: EBFDF60F-F2EE-4305-9C90-D6E520CBD296

AGENCY City of Winter Haven

By: _____

Name: _____

Title: _____

STATE OF FLORIDA, DEPARTMENT OF TRANSPORTATION

By: _____

Name: Nicole E. Mills, P.E.

Title: Director of Transportation Development

STATE OF FLORIDA, DEPARTMENT OF TRANSPORTATION
Legal Review:

Don Conway, Senior Attorney (as to form and legality)

DS
DC

Docusign Envelope ID: EBFDF60F-F2EE-4305-9C90-D6E520CBD296

EXHIBIT A

Project Description and Responsibilities

A. Project Description (description of Agency's project to provide context, description of project components funded via this Agreement (if not the entire project)): Winter Haven Airport Replace Beacon & PAPI Units

B. Project Location (limits, city, county, map): Winter Haven Regional Airport/Winter Haven, FL/Polk

C. Project Scope (allowable costs: describe project components, improvement type/service type, approximate timeline, project schedule, project size): As required by 215.971, F.S., this scope of work includes but is not limited to consultant and design fees; survey and geotechnical costs; construction inspection and material testing costs; mobilization and demobilization; and the purchase, relocation, refurbishment, or upgrade of NAVAIDs. Procurement and installation of new NAVAIDs include purchase, delivery, site work, electrical work, coordination with necessary agencies, permitting, testing, and commissioning of the new NAVAID. The relocation project includes the costs associated with the removal and relocation of said NAVAID; earthwork and electrical work of the new site; restoration of the previous site; coordination with all necessary agencies; permitting; testing, and the commissioning of the relocated NAVAID. Refurbishment, enhancement, and upgrades include the cost of new parts, repairs, modification to the existing NAVAID, permitting, coordination with necessary agencies, testing, and the commissioning of the modified NAVAID. All NAVAID projects include the materials, equipment, labor, and incidentals required to complete a NAVAID project. The Sponsor will comply with Aviation Program Assurances.

D. Deliverable(s):

The project scope identifies the ultimate project deliverables. Deliverables for requisition, payment and invoice purposes will be the incremental progress made toward completion of project scope elements. Supporting documentation will be quantifiable, measurable, and verifiable, to allow for a determination of the amount of incremental progress that has been made, and provide evidence that the payment requested is commensurate with the accomplished incremental progress and costs incurred by the Agency.

E. Unallowable Costs (including but not limited to):

F. Transit Operating Grant Requirements (Transit Only):

Transit Operating Grants billed as an operational subsidy will require an expenditure detail report from the Agency that matches the invoice period. The expenditure detail, along with the progress report, will be the required deliverables for Transit Operating Grants. Operating grants may be issued for a term not to exceed three years from execution. The original grant agreement will include funding for year one. Funding for years two and three will be added by amendment as long as the grantee has submitted all invoices on schedule and the project deliverables for the year have been met.

Docusign Envelope ID: EBFDF60F-F2EE-4305-9C90-D6E520CBD296



Docusign Envelope ID: EBFDF60F-F2EE-4305-9C90-D6E520CBD296

EXHIBIT B

Schedule of Financial Assistance

FUNDS AWARDED TO THE AGENCY AND REQUIRED MATCHING FUNDS PURSUANT TO THIS AGREEMENT CONSIST OF THE FOLLOWING:

A. Fund Type and Fiscal Year:

Financial Management Number	Fund Type	FLAIR Category	State Fiscal Year	Object Code	CSFA/ CFDA Number	CSFA/CFDA Title or Funding Source Description	Funding Amount
451944-1-94-01	DPTO	088719	2025	751000	55.004	Aviation Grant Program	$200,000.00
451944-1-94-01	LF	088719	2025	751000	55.004	Aviation Grant Program	$50,000.00
	Total Financial Assistance						$250,000.00

B. Estimate of Project Costs by Grant Phase:

Phases*	State	Local	Federal	Totals	State %	Local %	Federal %
Land Acquisition	$0.00	$0.00	$0.00	$0.00	0.00	0.00	0.00
Planning	$0.00	$0.00	$0.00	$0.00	0.00	0.00	0.00
Environmental/Design/Construction	$200,000.00	$50,000.00	$0.00	$250,000.00	80.00	20.00	0.00
Capital Equipment/ Preventative Maintenance	$0.00	$0.00	$0.00	$0.00	0.00	0.00	0.00
Match to Direct Federal Funding	$0.00	$0.00	$0.00	$0.00	0.00	0.00	0.00
Mobility Management (Transit Only)	$0.00	$0.00	$0.00	$0.00	0.00	0.00	0.00
Totals	$200,000.00	$50,000.00	$0.00	$250,000.00			

*Shifting items between these grant phases requires execution of an Amendment to the Public Transportation Grant Agreement.

Scope Code and/or Activity Line Item (ALI) (Transit Only)	

BUDGET/COST ANALYSIS CERTIFICATION AS REQUIRED BY SECTION 216.3475, FLORIDA STATUTES:

I certify that the cost for each line item budget category (grant phase) has been evaluated and determined to be allowable, reasonable, and necessary as required by Section 216.3475, Florida Statutes. Documentation is on file evidencing the methodology used and the conclusions reached.

Jennifer Gaona, MPA

Department Grant Manager Name

DocuSigned by:
Jennifer Gaona
23A088B28A0DD44D...

Signature

02/17/2025 | 2:47 PM EST

Date

Docusign Envelope ID: EBFDF60F-F2EE-4305-9C90-D6E520CBD296

EXHIBIT C

TERMS AND CONDITIONS OF CONSTRUCTION

1. Design and Construction Standards and Required Approvals.

a. The Agency understands that it is responsible for the preparation and certification of all design plans for the Project. The Agency shall hire a qualified consultant for the design phase of the Project or, if applicable, the Agency shall require their design-build contractor or construction management contractor to hire a qualified consultant for the design phase of the Project.

b. Execution of this Agreement by both Parties shall be deemed a Notice to Proceed to the Agency for the design phase or other non-construction phases of the Project. If the Project involves a construction phase, the Agency shall not begin the construction phase of the Project until the Department issues a Notice to Proceed for the construction phase. Prior to commencing the construction work described in this Agreement, the Agency shall request a Notice to Proceed from the Department's Project Manager, Jennifer Gaona, MPA (email: jennifer.gaona@dot.state.fl.us) or from an appointed designee. Any construction phase work performed prior to the execution of this required Notice to Proceed is not subject to reimbursement.

c. The Agency will provide one (1) copy of the final design plans and specifications and final bid documents to the Department's Project Manager prior to bidding or commencing construction of the Project.

d. The Agency shall require the Agency's contractor to post a payment and performance bond in accordance with applicable law(s).

e. The Agency shall be responsible to ensure that the construction work under this Agreement is performed in accordance with the approved construction documents, and that the construction work will meet all applicable Agency and Department standards.

f. Upon completion of the work authorized by this Agreement, the Agency shall notify the Department in writing of the completion of construction of the Project; and for all design work that originally required certification by a Professional Engineer, this notification shall contain an Engineer's Certification of Compliance, signed and sealed by a Professional Engineer, the form of which is attached to this Exhibit. The certification shall state that work has been completed in compliance with the Project construction plans and specifications. If any deviations are found from the approved plans or specifications, the certification shall include a list of all deviations along with an explanation that justifies the reason to accept each deviation.

2. Construction on the Department's Right of Way. If the Project involves construction on the Department's right-of-way, then the following provisions apply to any and all portions of the Project that are constructed on the Department's right-of-way:

a. The Agency shall hire a qualified contractor using the Agency's normal bid procedures to perform the construction work for the Project. The Agency must certify that the installation of the Project is completed by a Contractor prequalified by the Department as required by Section 2 of the Standard Specifications for Road and Bridge Construction (2016), as amended, unless otherwise approved by the Department in writing or the Contractor exhibits past project experience in the last five years that are comparable in scale, composition, and overall quality to the site characterized within the scope of services of this Project.

Docusign Envelope ID: EBFDF60F-F2EE-4305-9C90-D6E520CBD296

b. Construction Engineering Inspection (CEI) services will be provided by the Agency by hiring a Department prequalified consultant firm including one individual that has completed the Advanced Maintenance of Traffic Level Training, unless otherwise approved by the Department in writing. The CEI staff shall be present on the Project at all times that the contractor is working. Administration of the CEI staff shall be under the responsible charge of a State of Florida Licensed Professional Engineer who shall provide the certification that all design and construction for the Project meets the minimum construction standards established by Department. The Department shall approve all CEI personnel. The CEI firm shall not be the same firm as that of the Engineer of Record for the Project. The Department shall have the right, but not the obligation, to perform independent assurance testing during the course of construction of the Project. Notwithstanding the foregoing, the Department may issue a written waiver of the CEI requirement for portions of Projects involving the construction of bus shelters, stops, or pads.

c. The Project shall be designed and constructed in accordance with the latest edition of the Department's Standard Specifications for Road and Bridge Construction, the Department Design Standards, and the Manual of Uniform Traffic Control Devices (MUTCD). The following guidelines shall apply as deemed appropriate by the Department: the Department Structures Design Manual, AASHTO Guide Specifications for the Design of Pedestrian Bridges, AASHTO LRFD Bridge Design Specifications, Florida Design Manual, Manual for Uniform Minimum Standards for Design, Construction and Maintenance for Streets and Highways (the "Florida Green Book"), and the Department Traffic Engineering Manual. The Agency will be required to submit any construction plans required by the Department for review and approval prior to any work being commenced. Should any changes to the plans be required during construction of the Project, the Agency shall be required to notify the Department of the changes and receive approval from the Department prior to the changes being constructed. The Agency shall maintain the area of the Project at all times and coordinate any work needs of the Department during construction of the Project.

d. The Agency shall notify the Department a minimum of 48 hours before beginning construction within Department right-of-way. The Agency shall notify the Department should construction be suspended for more than 5 working days. The Department contact person for construction is __.

e. The Agency shall be responsible for monitoring construction operations and the maintenance of traffic (MOT) throughout the course of the Project in accordance with the latest edition of the Department Standard Specifications, section 102. The Agency is responsible for the development of a MOT plan and making any changes to that plan as necessary. The MOT plan shall be in accordance with the latest version of the Department Design Standards, Index 600 series. Any MOT plan developed by the Agency that deviates from the Department Design Standards must be signed and sealed by a professional engineer. MOT plans will require approval by the Department prior to implementation.

f. The Agency shall be responsible for locating all existing utilities, both aerial and underground, and for ensuring that all utility locations be accurately documented on the construction plans. All utility conflicts shall be fully resolved directly with the applicable utility.

g. The Agency will be responsible for obtaining all permits that may be required by other agencies or local governmental entities.

h. It is hereby agreed by the Parties that this Agreement creates a permissive use only and all improvements located on the Department's right-of-way resulting from this Agreement shall become the property of the Department. Neither the granting of the permission to use the Department right of way nor the placing of facilities upon the Department property shall operate to create or vest any property right to or in the Agency, except as may otherwise be provided in separate agreements. The Agency shall not acquire any right, title, interest or

Docusign Envelope ID: EBFDF60F-F2EE-4305-9C90-D6E520CBD296

estate in Department right of way, of any nature or kind whatsoever, by virtue of the execution, operation, effect, or performance of this Agreement including, but not limited to, the Agency's use, occupancy or possession of Department right of way. The Parties agree that this Agreement does not, and shall not be construed to, grant credit for any future transportation concurrency requirements pursuant to Chapter 163, F.S.

i. The Agency shall not cause any liens or encumbrances to attach to any portion of the Department's property, including but not limited to, the Department's right-of-way.

j. The Agency shall perform all required testing associated with the design and construction of the Project. Testing results shall be made available to the Department upon request. The Department shall have the right to perform its own independent testing during the course of the Project.

k. The Agency shall exercise the rights granted herein and shall otherwise perform this Agreement in a good and workmanlike manner, with reasonable care, in accordance with the terms and provisions of this Agreement and all applicable federal, state, local, administrative, regulatory, safety and environmental laws, codes, rules, regulations, policies, procedures, guidelines, standards and permits, as the same may be constituted and amended from time to time, including, but not limited to, those of the Department, applicable Water Management District, Florida Department of Environmental Protection, the United States Environmental Protection Agency, the United States Army Corps of Engineers, the United States Coast Guard and local governmental entities.

l. If the Department determines a condition exists which threatens the public's safety, the Department may, at its discretion, cause construction operations to cease and immediately have any potential hazards removed from its right-of-way at the sole cost, expense, and effort of the Agency. The Agency shall bear all construction delay costs incurred by the Department.

m. The Agency shall be responsible to maintain and restore all features that might require relocation within the Department right-of-way.

n. The Agency will be solely responsible for clean up or restoration required to correct any environmental or health hazards that may result from construction operations.

o. The acceptance procedure will include a final "walk-through" by Agency and Department personnel. Upon completion of construction, the Agency will be required to submit to the Department final as-built plans and an engineering certification that construction was completed in accordance to the plans. Submittal of the final as-built plans shall include one complete set of the signed and sealed plans on 11" X 17" plan sheets and an electronic copy prepared in Portable Document Format (PDF). Prior to the termination of this Agreement, the Agency shall remove its presence, including, but not limited to, all of the Agency's property, machinery, and equipment from Department right-of-way and shall restore those portions of Department right of way disturbed or otherwise altered by the Project to substantially the same condition that existed immediately prior to the commencement of the Project.

p. If the Department determines that the Project is not completed in accordance with the provisions of this Agreement, the Department shall deliver written notification of such to the Agency. The Agency shall have thirty (30) days from the date of receipt of the Department's written notice, or such other time as the Agency and the Department mutually agree to in writing, to complete the Project and provide the Department with written notice of the same (the "Notice of Completion"). If the Agency fails to timely deliver the Notice of Completion, or if it is determined that the Project is not properly completed after receipt of the Notice of Completion, the Department, within its discretion may: 1) provide the Agency with written authorization granting such additional time as the Department deems appropriate to correct the deficiency(ies); or 2) correct the deficiency(ies) at the Agency's sole cost and expense,

Docusign Envelope ID: EBFDF60F-F2EE-4305-9C90-D6E520CBD296

without Department liability to the Agency for any resulting loss or damage to property, including, but not limited to, machinery and equipment. If the Department elects to correct the deficiency(ies), the Department shall provide the Agency with an invoice for the costs incurred by the Department and the Agency shall pay the invoice within thirty (30) days of the date of the invoice.

q. The Agency shall implement best management practices for erosion and pollution control to prevent violation of state water quality standards. The Agency shall be responsible for the correction of any erosion, shoaling, or water quality problems that result from the construction of the Project.

r. Portable Traffic Monitoring Site (PTMS) or a Telemetry Traffic Monitoring Site (TTMS) may exist within the vicinity of your proposed work. It is the responsibility of the Agency to locate and avoid damage to these sites. If a PTMS or TTMS is encountered during construction, the Department must be contacted immediately.

s. During construction, highest priority must be given to pedestrian safety. If permission is granted to temporarily close a sidewalk, it should be done with the express condition that an alternate route will be provided, and shall continuously maintain pedestrian features to meet Americans Disability Act (ADA) standards.

t. Restricted hours of operation will be as follows, unless otherwise approved by the Department's District Construction Engineer or designee (insert hours and days of the week for restricted operation):

u. Lane closures on the state road system must be coordinated with the Public Information Office at least two weeks prior to the closure. The contact information for the Department's Public Information Office is:

Insert District PIO contact info:

Note: (Highlighted sections indicate need to confirm information with District Office or appropriate DOT person managing the Agreement)

3. **Engineer's Certification of Compliance.** The Agency shall complete and submit and if applicable Engineer's Certification of Compliance to the Department upon completion of the construction phase of the Project.

Docusign Envelope ID: EBFDF60F-F2EE-4305-9C90-D6E520CBD296

ENGINEER'S CERTIFICATION OF COMPLIANCE

PUBLIC TRANSPORTATION GRANT AGREEMENT
BETWEEN
THE STATE OF FLORIDA, DEPARTMENT OF TRANSPORTATION
and _____

PROJECT DESCRIPTION: _____

DEPARTMENT CONTRACT NO.: _____

FINANCIAL MANAGEMENT NO.: _____

In accordance with the Terms and Conditions of the Public Transportation Grant Agreement, the undersigned certifies that all work which originally required certification by a Professional Engineer has been completed in compliance with the Project construction plans and specifications. If any deviations have been made from the approved plans, a list of all deviations, along with an explanation that justifies the reason to accept each deviation, will be attached to this Certification. Also, with submittal of this certification, the Agency shall furnish the Department a set of "as-built" plans for construction on the Department's Right of Way certified by the Engineer of Record/CEI.

By: _____, P.E.

SEAL:

Name: _____

Date: _____

Docusign Envelope ID: EBFDF60F-F2EE-4305-9C90-D6E520CBD296

EXHIBIT D

AGENCY RESOLUTION

PLEASE SEE ATTACHED

Docusign Envelope ID: EBFDF60F-F2EE-4305-9C90-D6E520CBD296

EXHIBIT E

PROGRAM SPECIFIC TERMS AND CONDITIONS - AVIATION
AVIATION PROGRAM ASSURANCES

A. General.

1. The assurances herein shall form an integral part of the Agreement between the Department and the Agency.

2. These assurances delineate the obligations of the Parties to this Agreement to ensure their commitment and compliance with specific provisions of **Exhibit "A", Project Description and Responsibilities**, and **Exhibit "B", Schedule of Financial Assistance**, as well as serving to protect public investment in public-use airports and the continued viability of the Florida Aviation System.

3. The Agency shall comply with the assurances as specified in this Agreement.

4. The terms and assurances of this Agreement shall remain in full force and effect throughout the useful life of a facility developed; equipment acquired; or Project items installed within a facility for an airport development or noise compatibility program project, but shall not exceed 20 years from the effective date of this Agreement.

5. There shall be no limit on the duration of the terms and assurances of this Agreement regarding Exclusive Rights and Airport Revenue so long as the property is used as a public airport.

6. There shall be no limit on the duration of the terms and assurances of this Agreement with respect to real property acquired with funds provided by this Agreement.

7. Subject to appropriations, the Department shall continue to comply with its financial commitment to this Project under the terms of this Agreement, until such time as the Department may determine that the Agency has failed to comply with the terms and assurances of this Agreement.

8. An Agency that has been determined by the Department to have failed to comply with either the terms of these Assurances, or the terms of the Agreement, or both, shall be notified, in writing, by the Department, identifying the specifics of the non-compliance and any corrective action by the Agency to remedy the failure.

9. Failure by the Agency to satisfactorily remedy the non-compliance shall absolve the Department's continued financial commitment to this Project and immediately require the Agency to repay the Department the full amount of funds expended by the Department on this Project.

10. Any history of failure to comply with the terms and assurances of an Agreement will jeopardize the Agency's eligibility for further state funding of airport projects by the Department.

B. Agency Compliance Certification.

1. General Certification. The Agency hereby certifies, with respect to this Project, it will comply, within its authority, with all applicable, current laws and rules of the State of Florida and applicable local governments, as well as Department policies, guidelines, and requirements, including but not limited to, the following (latest version of each document):

a. Florida Statutes (F.S.)

- Chapter 163, F.S., Intergovernmental Programs
- Chapter 329, F.S., Aircraft: Title; Liens; Registration; Liens
- Chapter 330, F.S., Regulation of Aircraft, Pilots, and Airports
- Chapter 331, F.S., Aviation and Aerospace Facilities and Commerce
- Chapter 332, F.S., Airports and Other Air Navigation Facilities
- Chapter 333, F.S., Airport Zoning

Docusign Envelope ID: EBFDF60F-F2EE-4305-9C90-D6E520CBD296

b. Florida Administrative Code (FAC)

- Chapter 73C-41, FAC, Community Planning; Governing the Procedure for the Submittal and Review of Local Government Comprehensive Plans and Amendments
- Chapter 14-60, FAC, Airport Licensing, Registration, and Airspace Protection
- Section 62-256.300, FAC, Open Burning, Prohibitions
- Section 62-701.320(13), FAC, Solid Waste Management Facility Permit Requirements, General, Airport Safety

c. Local Government Requirements

- Airport Zoning Ordinance
- Local Comprehensive Plan

d. Department Requirements

- Eight Steps of Building a New Airport
- Florida Airport Revenue Use Guide
- Florida Aviation Project Handbook
- Guidebook for Airport Master Planning
- Airport Compatible Land Use Guidebook

2. **Construction Certification.** The Agency hereby certifies, with respect to a construction-related project, that all design plans and specifications will comply with applicable federal, state, local, and professional standards, as well as Federal Aviation Administration (FAA) Advisory Circulars (AC's) and FAA issued waivers thereto, including but not limited to, the following:

a. Federal Requirements

- FAA AC 70/7460-1, Obstruction Marking and Lighting
- FAA AC 150/5300-13, Airport Design
- FAA AC 150/5370-2, Operational Safety on Airports During Construction
- FAA AC 150/5370-10, Standards for Specifying Construction of Airports

b. Local Government Requirements

- Local Building Codes
- Local Zoning Codes

c. Department Requirements

- Manual of Uniform Minimum Standards for Design, Construction and Maintenance for Streets and Highways (Commonly Referred to as the "Florida Green Book")
- Manual on Uniform Traffic Control Devices
- Section 14-60.007, FAC, Airfield Standards for Licensed Airports
- Standard Specifications for Construction of General Aviation Airports
- Design Guidelines & Minimum Standard Requirements for T-Hangar Projects

3. **Land Acquisition Certification.** The Agency hereby certifies, regarding land acquisition, that it will comply with applicable federal and/or state policies, regulations, and laws, including but not limited to the following:

a. Federal Requirements

- Uniform Relocation Assistance and Real Property Acquisition Policies Act of 1970
- National Environmental Policy of 1969
- FAA Order 5050.4, National Environmental Policy Act Implementing Instructions for Airport Projects
- FAA Order 5100.37B, Land Acquisition and Relocation Assistance for Airport Projects

b. Florida Requirements

- Chapter 73, F.S., Eminent Domain (re: Property Acquired Through Condemnation)
- Chapter 74, F.S., Proceedings Supplemental to Eminent Domain (re: Condemnation)
- Section 286.23, F.S., Public Business: Miscellaneous Provisions

Docusign Envelope ID: EBFDF60F-F2EE-4305-9C90-D6E520CBD296

C. Agency Authority.

1. **Legal Authority.** The Agency hereby certifies, with respect to this Agreement, that it has the legal authority to enter into this Agreement and commit to this Project; that a resolution, motion, or similar action has been duly adopted or passed as an official act of the airport sponsor's governing body authorizing this Agreement, including assurances contained therein, and directing and authorizing the person identified as the official representative of the governing body to act on its behalf with respect to this Agreement and to provide any additional information as may be required.

2. **Financial Authority.** The Agency hereby certifies, with respect to this Agreement, that it has sufficient funds available for that portion of the Project costs which are not paid by the U.S. Government or the State of Florida; that it has sufficient funds available to assure future operation and maintenance of items funded by this Project, which it will control; and that authority has been granted by the airport sponsor governing body to commit those funds to this Project.

D. Agency Responsibilities. The Agency hereby certifies it currently complies with or will comply with the following responsibilities:

1. **Accounting System.**

   a. The Agency shall create and maintain a separate account to document all of the financial transactions related to the airport as a distinct entity.

   b. The accounting records shall be kept by the Agency or its authorized representative in accordance with Generally Accepted Accounting Principles and in an accounting system that will facilitate an effective audit in accordance with the 2 CFR Part 200, Uniform Administrative Requirements, Cost Principles, and Audit Requirements for Federal Awards and Section 215.97, F.S., Florida Single Audit Act.

   c. The Department has the right to audit and inspect all financial records of the Agency upon reasonable notice.

2. **Good Title.**

   a. The Agency holds good title, satisfactory to the Department, to the airport or site thereof, or gives assurance, satisfactory to the Department, that good title will be obtained.

   b. For noise compatibility program projects undertaken on the airport sponsor's property, the Agency holds good title, satisfactory to the Department, to that portion of the property upon which state funds will be expended, or gives assurance, satisfactory to the Department, that good title will be obtained.

3. **Preserving Rights and Powers.**

   a. The Agency shall not take or permit any action which would operate to deprive it of any of the rights and powers necessary to perform any or all of the terms and assurances of this Agreement without the written approval of the Department. Further, the Agency shall act promptly to acquire, extinguish, or modify, in a manner acceptable to the Department, any outstanding rights or claims of right of others which would interfere with such performance by the Agency.

   b. If an arrangement is made for management and operation of the airport by any entity or person other than the Agency or an employee of the Agency, the Agency shall reserve sufficient rights and authority to ensure that the airport will be operated and maintained in accordance with the terms and assurances of this Agreement.

4. **Hazard Removal and Mitigation.**

Docusign Envelope ID: EBFDF60F-F2EE-4305-9C90-D6E520CBD296

a. For airport hazards located on airport controlled property, the Agency shall clear and protect terminal airspace required for instrument and visual operations at the airport (including established minimum flight altitudes) by removing, lowering, relocating, marking, or lighting or otherwise mitigating existing airport hazards and by preventing the establishment or creation of future airport hazards.

b. For airport hazards not located on airport controlled property, the Agency shall work in conjunction with the governing public authority or private land owner of the property to clear and protect terminal airspace required for instrument and visual operations at the airport (including established minimum flight altitudes) by removing, lowering, relocating, marking, or lighting or otherwise mitigating existing airport hazards and by preventing the establishment or creation of future airport hazards. The Agency may enter into an agreement with surrounding property owners or pursue available legal remedies to remove potential hazards to air navigation.

5. Airport Compatible Land Use.

a. The Agency assures that appropriate airport zoning ordinances are in place consistent with Section 333.03, F.S., or if not in place, that it will take appropriate action necessary to ensure local government adoption of an airport zoning ordinance or execution of an interlocal agreement with another local government body having an airport zoning ordinance, consistent with the provisions of Section 333.03, F.S.

b. The Agency assures that it will disapprove or oppose any attempted alteration or creation of objects, natural or man-made, dangerous to navigable airspace or that would adversely affect the current or future levels of airport operations.

c. The Agency assures that it will disapprove or oppose any attempted change in local land use development regulations that would adversely affect the current or future levels of airport operations by creation or expansion of airport incompatible land use areas.

6. Consistency with Local Government Plans.

a. The Agency assures the Project is consistent with the currently existing and planned future land use development plans approved by the local government having jurisdictional responsibility for the area surrounding the airport.

b. The Agency assures that it has given fair consideration to the interest of local communities and has had reasonable consultation with those parties affected by the Project.

c. The Agency shall consider and take appropriate actions, if deemed warranted by the Agency, to adopt the current, approved Airport Master Plan into the local government comprehensive plan.

7. Consistency with Airport Master Plan and Airport Layout Plan.

a. The Agency assures that the project, covered by the terms and assurances of this Agreement, is consistent with the most current Airport Master Plan.

b. The Agency assures that the Project, covered by the terms and assurances of this Agreement, is consistent with the most current, approved Airport Layout Plan (ALP), which shows:

1) The boundaries of the airport and all proposed additions thereto, together with the boundaries of all offsite areas owned or controlled by the Agency for airport purposes and proposed additions thereto;
2) The location and nature of all existing and proposed airport facilities and structures (such as runways, taxiways, aprons, terminal buildings, hangars, and roads), including all proposed extensions and reductions of existing airport facilities; and
3) The location of all existing and proposed non-aviation areas on airport property and of all existing improvements thereon.

Docusign Envelope ID: EBFDF60F-F2EE-4305-9C90-D6E520CBD296

c. The Agency assures that it will not make or permit any changes or alterations on the airport or any of its facilities that are not consistent with the Airport Master Plan and the Airport Layout Plan, as approved by the Department.

d. Original Airport Master Plans and Airport Layout Plans and each amendment, revision, or modification thereof, will be subject to the approval of the Department.

8. Airport Financial Plan.

a. The Agency assures that it will develop and maintain a cost-feasible Airport financial plan to accomplish the projects necessary to achieve the proposed airport improvements identified in the Airport Master Plan and depicted in the Airport Layout Plan, and any updates thereto. The Agency's Airport financial plan must comply with the following conditions:

1) The Airport financial plan will be a part of the Airport Master Plan.
2) The Airport financial plan will realistically assess project phasing considering availability of state and local funding and likelihood of federal funding under the FAA's priority system.
3) The Airport financial plan will not include Department funding for projects that are inconsistent with the local government comprehensive plan.

b. All Project cost estimates contained in the Airport financial plan shall be entered into and kept current in the Florida Aviation Database (FAD) Joint Automated Capital Improvement Program (JACIP) website.

9. Airport Revenue. The Agency assures that all revenue generated by the airport will be expended for capital improvement or operating costs of the airport; the local airport system; or other local facilities which are owned or operated by the owner or operator of the airport and which are directly and substantially related to the air transportation of passengers or property, or for environmental or noise mitigation purposes on or off the airport.

10. Fee and Rental Structure.

a. The Agency assures that it will maintain a fee and rental structure for facilities and services at the airport that it will make the airport as self-sustaining as possible under the circumstances existing at the particular airport.

b. If this Agreement results in a facility that will be leased or otherwise produce revenue, the Agency assures that the price charged for that facility will be based on the market value.

11. Public-Private Partnership for Aeronautical Uses.

a. If the airport owner or operator and a person or entity that owns an aircraft or an airport tenant or potential tenant agree that an aircraft hangar or tenant-specific facility, respectively, is to be constructed on airport property for aircraft storage or tenant use at the expense of the aircraft owner or tenant, the airport owner or operator may grant to the aircraft owner or tenant of the facility a lease that is subject to such terms and conditions on the facility as the airport owner or operator may impose, subject to approval by the Department.

b. The price charged for said lease will be based on market value, unless otherwise approved by the Department.

12. Economic Nondiscrimination.

a. The Agency assures that it will make the airport available as an airport for public use on reasonable terms without unjust discrimination to all types, kinds and classes of aeronautical activities, including commercial aeronautical activities offering services to the public.

1) The Agency may establish such reasonable, and not unjustly discriminatory, conditions to be met by all users of the airport as may be necessary for the safe and efficient operation of the airport.

Docusign Envelope ID: EBFDF60F-F2EE-4305-9C90-D6E520CBD296

2) The Agency may prohibit or limit any given type, kind or class of aeronautical use of the airport if such action is necessary for the safe operation of the airport or necessary to serve the civil aviation needs of the public.

b. The Agency assures that each airport Fixed-Based Operator (FBO) shall be subject to the same rates, fees, rentals, and other charges as are uniformly applicable to all other FBOs making the same or similar uses of such airport and utilizing the same or similar facilities.

13. Air and Water Quality Standards. The Agency assures that all projects involving airport location, major runway extension, or runway location will be located, designed, constructed, and operated so as to comply with applicable air and water quality standards.

14. Operations and Maintenance.

a. The Agency assures that the airport and all facilities, which are necessary to serve the aeronautical users of the airport, shall be operated at all times in a safe and serviceable condition and in accordance with the minimum standards as may be required or prescribed by applicable federal and state agencies for maintenance and operation, as well as minimum standards established by the Department for State of Florida licensing as a public-use airport.

1) The Agency assures that it will not cause or permit any activity or action thereon which would interfere with its use for airport purposes.
2) Except in emergency situations, any proposal to temporarily close the airport for non-aeronautical purposes must first be approved by the Department.
3) The Agency assures that it will have arrangements for promptly notifying airmen of any condition affecting aeronautical use of the airport.

b. Nothing contained herein shall be construed to require that the airport be operated for aeronautical use during temporary periods when adverse weather conditions interfere with safe airport operations.

15. Federal Funding Eligibility.

a. The Agency assures it will take appropriate actions to maintain federal funding eligibility for the airport and it will avoid any action that renders the airport ineligible for federal funding.

b. If the Agency becomes ineligible for federal funding of airport projects, such determination will render the Agency ineligible for state funding of airport projects.

16. Project Implementation.

a. The Agency assures that it will begin making expenditures or incurring obligations pertaining to this Project within one year after the effective date of this Agreement.

b. The Agency may request a one-year extension of this one-year time period, subject to approval by the Department District Secretary or designee.

c. Failure of the Agency to make expenditures, incur obligations or receive an approved extension may allow the Department to terminate this Agreement.

17. Exclusive Rights. The Agency assures that it will not permit any exclusive right for use of the airport by any person providing, or intending to provide, aeronautical services to the public.

18. Airfield Access.

a. The Agency assures that it will not grant or allow general easement or public access that opens onto or crosses the airport runways, taxiways, flight line, passenger facilities, or any area used for emergency

Docusign Envelope ID: EBFDF60F-F2EE-4305-9C90-D6E520CBD296

equipment, fuel, supplies, passengers, mail and freight, radar, communications, utilities, and landing systems, including but not limited to flight operations, ground services, emergency services, terminal facilities, maintenance, repair, or storage, except for those normal airport providers responsible for standard airport daily services or during special events at the airport open to the public with limited and controlled access.

b. The Agency assures that it will not grant or allow general easement or public access to any portion of the airfield from adjacent real property which is not owned, operated, or otherwise controlled by the Agency without prior Department approval.

19. Retention of Rights and Interests. The Agency will not sell, lease, encumber, or otherwise transfer or dispose of any part of its title or other interests in the real property shown as airport owned or controlled on the current airport layout plan without prior written approval by the Department. It will not sell, lease, encumber, terminate, waive, or otherwise transfer or dispose of any part of its title, rights, or other interest in existing noise easements or avigation easements on any property, airport or non-airport, without prior written approval by the Department. These assurances shall not limit the Agency's right to lease airport property for airport-compatible purposes.

20. Consultant, Contractor, Scope, and Costs.

a. The Department has the right to disapprove the Agency's employment of consultants, contractors, and subcontractors for all or any part of this Project if the specific consultants, contractors, or subcontractors have a record of poor project performance with the Department.

b. Further, the Department maintains the right to disapprove the proposed Project scope and cost of professional services.

21. Planning Projects. For all planning projects or other aviation studies, the Agency assures that it will:

a. Execute the project per the approved project narrative or with approved modifications.

b. Furnish the Department with such periodic project and work activity reports as indicated in the approved scope of services.

c. Make such project materials available for public review, unless exempt from public disclosure.

1) Information related to airport security is considered restricted information and is exempt from public dissemination per Sections 119.071(3) and 331.22 F.S.
2) No materials prepared under this Agreement shall be subject to copyright in the United States or any other country.

d. Grant the Department unrestricted authority to publish, disclose, distribute, and otherwise use any of the material prepared in connection with this Agreement.

e. If the Project involves developing an Airport Master Plan or an Airport Layout Plan, and any updates thereto, it will be consistent with provisions of the Florida Aviation System Plan, will identify reasonable future growth of the airport and the Agency will comply with the Department airport master planning guidebook, including:

1) Provide copies, in electronic and editable format, of final Project materials to the Department, including computer-aided drafting (CAD) files of the Airport Layout Plan.
2) Develop a cost-feasible financial plan, approved by the Department, to accomplish the projects described in the Airport Master Plan or depicted in the Airport Layout Plan, and any updates thereto. The cost-feasible financial plan shall realistically assess Project phasing considering availability of state and local funding and federal funding under the FAA's priority system.
3) Enter all projects contained in the cost-feasible plan in the Joint Automated Capital Improvement Program (JACIP).

Docusign Envelope ID: EBFDF60F-F2EE-4305-9C90-D6E520CBD296

f. The Agency understands and agrees that Department approval of this Agreement or any planning material developed as part of this Agreement does not constitute or imply any assurance or commitment on the part of the Department to approve any pending or future application for state aviation funding.

g. The Agency will submit master planning draft and final deliverables for Department and, if required, FAA approval prior to submitting any invoices to the Department for payment.

22. Land Acquisition Projects. For the purchase of real property, the Agency assures that it will:

a. Laws. Acquire the land in accordance with federal and/or state laws governing such action.

b. Administration. Maintain direct control of Project administration, including:

1) Maintain responsibility for all related contract letting and administrative procedures related to the purchase of real property.
2) Secure written Department approval to execute each agreement for the purchase of real property with any third party.
3) Ensure a qualified, State-certified general appraiser provides all necessary services and documentation.
4) Furnish the Department with a projected schedule of events and a cash flow projection within 20 calendar days after completion of the review appraisal.
5) Establish a Project account for the purchase of the land.
6) Collect and disburse federal, state, and local project funds.

c. Reimbursable Funds. If funding conveyed by this Agreement is reimbursable for land purchase in accordance with Chapter 332, F.S., the Agency shall comply with the following requirements:

1) The Agency shall apply for a FAA Airport Improvement Program grant for the land purchase within 60 days of executing this Agreement.
2) If federal funds are received for the land purchase, the Agency shall notify the Department, in writing, within 14 calendar days of receiving the federal funds and is responsible for reimbursing the Department within 30 calendar days to achieve normal project federal, state, and local funding shares per Chapter 332, F.S.
3) If federal funds are not received for the land purchase, the Agency shall reimburse the Department within 30 calendar days after the reimbursable funds are due in order to achieve normal project state and local funding shares as described in Chapter 332, F.S.
4) If federal funds are not received for the land purchase and the state share of the purchase is less than or equal to normal state and local funding shares per Chapter 332, F.S., when reimbursable funds are due, no reimbursement to the Department shall be required.

d. New Airport. If this Project involves the purchase of real property for the development of a new airport, the Agency assures that it will:

1) Apply for federal and state funding to construct a paved runway, associated aircraft parking apron, and connecting taxiway within one year of the date of land purchase.
2) Complete an Airport Master Plan within two years of land purchase.
3) Complete airport construction for basic operation within 10 years of land purchase.

e. Use of Land. The Agency assures that it shall use the land for aviation purposes in accordance with the terms and assurances of this Agreement within 10 years of acquisition.

f. Disposal of Land. For the disposal of real property the Agency assures that it will comply with the following:
1) For land purchased for airport development or noise compatibility purposes, the Agency shall, when the land is no longer needed for such purposes, dispose of such land at fair market value and/or make available to the Department an amount equal to the state's proportionate share of its market value.

Docusign Envelope ID: EBFDF60F-F2EE-4305-9C90-D6E520CBD296

2) Land will be considered to be needed for airport purposes under this assurance if:

a) It serves aeronautical purposes such as a runway protection zone or as a noise buffer.
b) Revenue from uses of such land contributes to airport financial self-sufficiency.

3) Disposition of land under Sections D.22.f.1. or D.22.f.2. of this Exhibit, above, shall be subject to retention or reservation of any interest or right therein needed to ensure such land will only be used for purposes compatible with noise levels related to airport operations.
4) Revenues from the sale of such land must be accounted for as outlined in Section D.1. of this Exhibit, and expended as outlined in Section D.9. of this Exhibit.

23. Construction Projects. The Agency assures that it will:

a. Project Certifications. Certify Project compliances, including:

1) Consultant and contractor selection comply with all applicable federal, state and local laws, rules, regulations, and policies.
2) All design plans and specifications comply with federal, state, and professional standards and applicable FAA advisory circulars, as well as the minimum standards established by the Department for State of Florida licensing as a public-use airport.
3) Completed construction complies with all applicable local building codes.
4) Completed construction complies with the Project plans and specifications with certification of that fact by the Project Engineer.

b. Design Development. For the plans, specifications, construction contract documents, and any and all other engineering, construction, and contractual documents produced by the Engineer, which are hereinafter collectively referred to as "plans", the Engineer will certify that:

1) The plans shall be developed in accordance with sound engineering and design principles, and with generally accepted professional standards.
2) The plans shall be consistent with the intent of the Project as defined in Exhibit A and Exhibit B of this Agreement.
3) The Project Engineer shall perform a review of the certification requirements listed in Section B.2. of this Exhibit, Construction Certification, and make a determination as to their applicability to this Project.
4) Development of the plans shall comply with all applicable laws, ordinances, zoning and permitting requirements, public notice requirements, and other similar regulations.

c. Inspection and Approval. The Agency assures that:

1) The Agency will provide and maintain competent technical supervision at the construction site throughout the Project to assure that the work conforms to the plans, specifications, and schedules approved by the Department, as applicable, for the Project.
2) The Agency assures that it will allow the Department to inspect the work and that it will provide any cost and progress reporting, as may be required by the Department.
3) The Agency assures that it will take the appropriate corrective action necessary, as required by the Department, for work which does not conform to the Department standards.

d. Pavement Preventive Maintenance. The Agency assures that for a project involving replacement or reconstruction of runway or taxiway pavement it has implemented an airport pavement maintenance management program and that it will use such program for the useful life of any pavement constructed, reconstructed, or repaired with state financial assistance at the airport.

Docusign Envelope ID: EBFDF60F-F2EE-4305-9C90-D6E520CBD296

24. Noise Mitigation Projects. The Agency assures that it will:

a. Government Agreements. For all noise compatibility projects that are carried out by another unit of local government or are on property owned by a unit of local government other than the Agency, the Agency shall enter into an agreement with that government body.

1) The local agreement, satisfactory to the Department, shall obligate the unit of local government to the same terms and assurances that apply to the Agency.
2) The Agency assures that it will take steps to enforce the local agreement if there is substantial non-compliance with the terms of the local agreement.

b. Private Agreements. For noise compatibility projects on privately owned property:

1) The Agency shall enter into an agreement with the owner of that property to exclude future actions against the airport.
2) The Agency assures that it will take steps to enforce such agreement if there is substantial non-compliance with the terms of the agreement.

- End of Exhibit E -

Docusign Envelope ID: EBFDF60F-F2EE-4305-9C90-D6E520CBD296

Exhibit E1

PROGRAM SPECIFIC TERMS AND CONDITIONS

(Prohibition on Discrimination Based on Health Care Choices)

This exhibit forms an integral part of the Agreement between the Department and the Agency.

1. **Statutory Reference.** Section 339.08, F.S. and Section 381.00316, F.S.

2. **Statutory Compliance.** Pursuant to Section 339.08, F.S., the Department may not expend state funds to support a project or program of certain entities if the entity is found to be in violation of Section 381.00316, F.S. The Department shall withhold state funds until the entity is found to be in compliance with Section 381.00316, F.S. This shall apply to any of the following entities:

    a. A public transit provider as defined in s. 341.031(1), F.S.;
    b. An authority created pursuant to chapter 343, F.S., chapter 348, F.S., or chapter 349, F.S.; c. A public-use airport as defined in s. 332.004, F.S.; or
    d. A port listed in s. 311.09(1), F.S.

- End of Exhibit E1 -

Docusign Envelope ID: EBFDF60F-F2EE-4305-9C90-D6E520CBD296

EXHIBIT F

Contract Payment Requirements
Florida Department of Financial Services, Reference Guide for State Expenditures
Cost Reimbursement Contracts

Invoices for cost reimbursement contracts must be supported by an itemized listing of expenditures by category (salary, travel, expenses, etc.). Supporting documentation shall be submitted for each amount for which reimbursement is being claimed indicating that the item has been paid. Documentation for each amount for which reimbursement is being claimed must indicate that the item has been paid. Check numbers may be provided in lieu of copies of actual checks. Each piece of documentation should clearly reflect the dates of service. Only expenditures for categories in the approved agreement budget may be reimbursed. These expenditures must be allowable (pursuant to law) and directly related to the services being provided.

Listed below are types and examples of supporting documentation for cost reimbursement agreements:

(1) Salaries: A payroll register or similar documentation should be submitted. The payroll register should show gross salary charges, fringe benefits, other deductions and net pay. If an individual for whom reimbursement is being claimed is paid by the hour, a document reflecting the hours worked times the rate of pay will be acceptable.

(2) Fringe Benefits: Fringe Benefits should be supported by invoices showing the amount paid on behalf of the employee (e.g., insurance premiums paid). If the contract specifically states that fringe benefits will be based on a specified percentage rather than the actual cost of fringe benefits, then the calculation for the fringe benefits amount must be shown.

Exception: Governmental entities are not required to provide check numbers or copies of checks for fringe benefits.

(3) Travel: Reimbursement for travel must be in accordance with Section 112.061, Florida Statutes, which includes submission of the claim on the approved State travel voucher or electronic means.

(4) Other direct costs: Reimbursement will be made based on paid invoices/receipts. If nonexpendable property is purchased using State funds, the contract should include a provision for the transfer of the property to the State when services are terminated. Documentation must be provided to show compliance with Department of Management Services Rule 60A-1.017, Florida Administrative Code, regarding the requirements for contracts which include services and that provide for the contractor to purchase tangible personal property as defined in Section 273.02, Florida Statutes, for subsequent transfer to the State.

(5) In-house charges: Charges which may be of an internal nature (e.g., postage, copies, etc.) may be reimbursed on a usage log which shows the units times the rate being charged. The rates must be reasonable.

(6) Indirect costs: If the contract specifies that indirect costs will be paid based on a specified rate, then the calculation should be shown.

Contracts between state agencies, and/or contracts between universities may submit alternative documentation to substantiate the reimbursement request that may be in the form of FLAIR reports or other detailed reports.

The Florida Department of Financial Services, online Reference Guide for State Expenditures can be found at this web address https://www.myfloridacfo.com/Division/AA/Manuals/documents/ReferenceGuideforStateExpenditures.pdf.

Docusign Envelope ID: EBFDF60F-F2EE-4305-9C90-D6E520CBD296

EXHIBIT G

AUDIT REQUIREMENTS FOR AWARDS OF STATE FINANCIAL ASSISTANCE

THE STATE RESOURCES AWARDED PURSUANT TO THIS AGREEMENT CONSIST OF THE FOLLOWING:

SUBJECT TO SECTION 215.97, FLORIDA STATUTES:~

Awarding Agency: Florida Department of Transportation
State Project Title: Aviation Grant Program
CSFA Number: 55.004
***Award Amount:** $200,000

*The award amount may change with amendments

Specific project information for CSFA Number 55.004 is provided at: https://apps.fldfs.com/fsaa/searchCatalog.aspx

COMPLIANCE REQUIREMENTS APPLICABLE TO STATE RESOURCES AWARDED PURSUANT TO THIS AGREEMENT:

State Project Compliance Requirements for CSFA Number 55.004 are provided at: https://apps.fldfs.com/fsaa/searchCompliance.aspx

The State Projects Compliance Supplement is provided at: https://apps.fldfs.com/fsaa/compliance.aspx

Docusign Envelope ID: EBFDF60F-F2EE-4305-9C90-D6E520CBD296

To: Jennifer.Gaona@dot.state.fl.us

FLORIDA DEPARTMENT OF TRANSPORTATION
FUNDS APPROVAL

G3982

2/11/2025

CONTRACT INFORMATION

Contract:	G3982
Contract Type:	GD - GRANT DISBURSEMENT (GRANT)
Method of Procurement:	G - GOVERMENTAL AGENCY (287.057,F.S.)
Vendor Name:	CITY OF WINTER HAVEN
Vendor ID:	F596000453027
Beginning Date of This Agreement:	02/10/2025
Ending Date of This Agreement:	06/30/2026
Contract Total/Budgetary Ceiling:	ct = $200,000.00
Description:	Winter Haven Airport Replace Beacon & PAPI Units

FUNDS APPROVAL INFORMATION

FUNDS APPROVED/REVIEWED FOR JASON ADANK, CPA, COMPTROLLER ON 2/11/2025

Action:	Original
Reviewed or Approved:	APPROVED
Organization Code:	55012020129
Expansion Option:	A8
Object Code:	751000
Amount:	$200,000.00
Financial Project:	45194419401
Work Activity (FCT):	215
CFDA:	
Fiscal Year:	2025
Budget Entity:	55100100
Category/Category Year:	088719/25
Amendment ID:	O001
Sequence:	00
User Assigned ID:	
Enc Line (6s)/Status:	0001/04

Total Amount: $200,000.00

DATE: February 27, 2025

TO: Honorable Mayor and City Commissioners

VIA: T. Michael Stavres, City Manager
M.J. Carnevale, Deputy City Manager
Eric Labbe, Economic Opportunity and Community Investment Director
Sean Byers, Planning Manager

FROM: Chris Young, Senior Planner

SUBJECT: Resolution R-25-12: Request by GE Investments of Polk, LLC for final plat approval of the Crescent Pointe Subdivision. General Location: Subdivision is generally located west of Highway 653 and south of Crescent Loop.

BACKGROUND

GE Investments of Polk, LLC is requesting final plat approval for Crescent Pointe. The 22.5-acre subdivision is generally located west of Highway 653 and south of Crescent Loop.

The single-family residential subdivision contains 37 building lots and three (3) common lots consisting of stormwater retention, open space areas, lift-stations, and rights-of-way dedication. Internal roadways are contained within 50-foot rights-of-way and will be dedicated to the City of Winter Haven. All water, reuse, and sewer utilities will be owned and maintained by the City, while all drainage conveyances and stormwater management areas will be maintained by the Home Owners Association.

CONSISTENCY WITH FUTURE LAND USE AND ZONING

Crescent Pointe was developed according to the requirements contained in Single Family Residential – Small Lot (R-2) zoning District. All lots meet the minimum requirements established by the zoning district. Additionally, the subdivision is consistent with the adopted Neighborhood-Suburban Future Land Use.

INFRASTRUCTURE

Water service to the subdivision is from the Winter Haven Water System and wastewater will be treated at Wastewater Treatment Plant 3. There is adequate capacity in these systems to serve this subdivision. Access to the subdivision is from Highway 653. The roadway has sufficient capacity to serve this subdivision upon build-out.

FINANCIAL IMPACT

Using an estimated taxable value of $300,000 per lot, this subdivision will have an estimated taxable value of $11.1 million, and will generate approximately $73,149 per year in City ad valorem revenues at the anticipated millage rate of 6.59. Additional revenue will be received through the provision of City services and taxes on utilities.

STRATEGIC PLAN ALIGNMENT

This is an approval of a final subdivision plat and is not specifically defined as a goal or strategy in the Strategic Plan. However, it is generally aligned with the Economic Sustainability and Responsible Government Pillars.

CONCLUSION

The proposed subdivision is consistent with the Comprehensive Plan and all requirements of Chapter 177, Florida Statutes, for the platting of land.

RECOMMENDATION

Staff recommends the City Commission approve Resolution R-25-12.

ATTACHMENTS

- Location Map
- Resolution R-25-12

Location Map

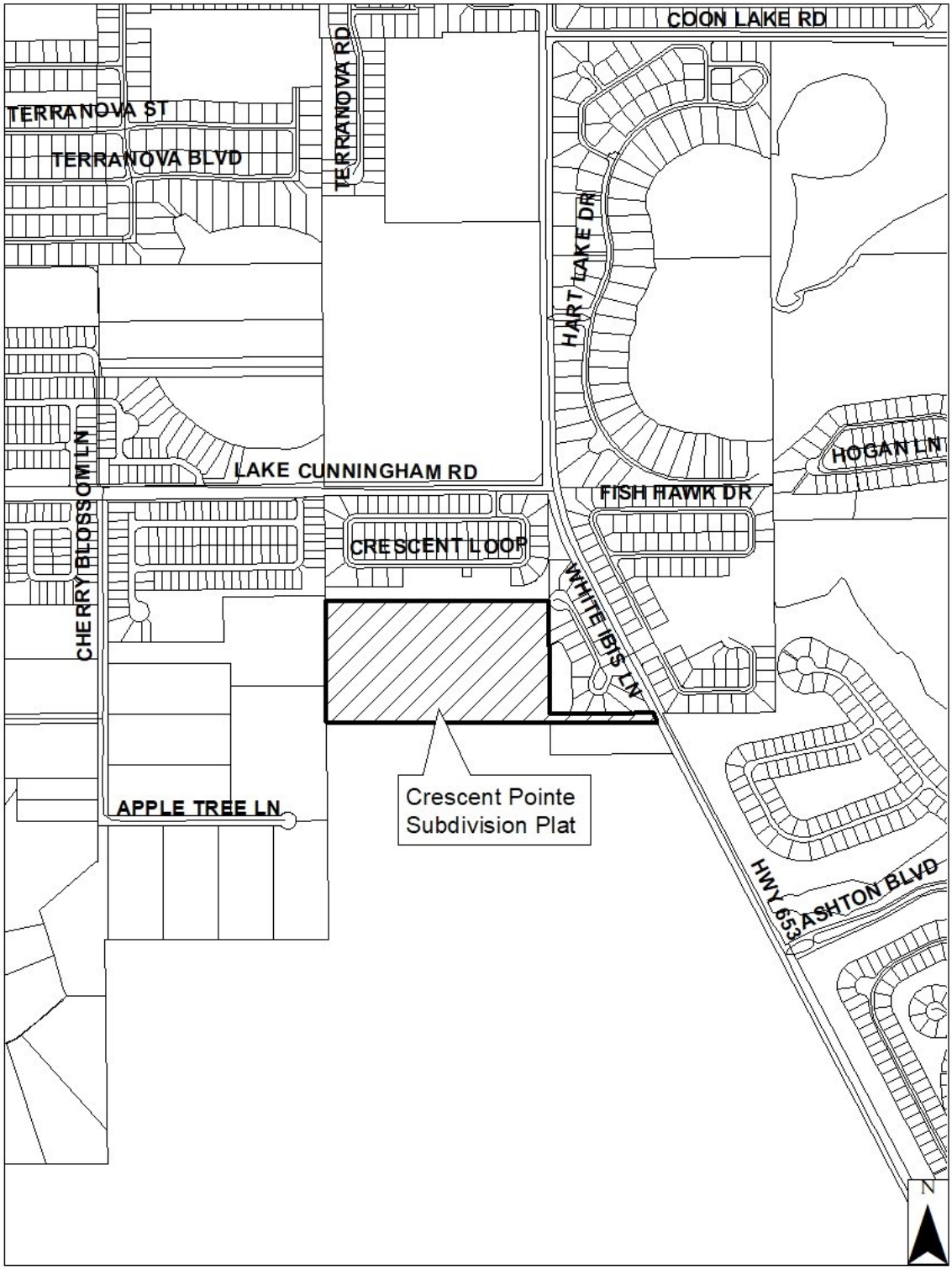

Space for Recording

RESOLUTION R-25-12

A RESOLUTION APPROVING THAT CERTAIN PLAT ENTITLED "CRESCENT POINTE" FOR FILING IN ACCORDANCE WITH CHAPTER 177, FLORIDA STATUTES WITH SPECIFIC CONDITIONS; PROVIDING FOR THE ADMINISTRATIVE CORRECTION OF SCRIVENER'S ERRORS; AND ESTABLISHING AN EFFECTIVE DATE. (General location: Subdivision is generally located west of Highway 653 and south of Crescent Loop Road)

WHEREAS, GE Investments of Polk, LLC, the owner of the below described lands has submitted that certain plat entitled "Crescent Pointe" for filing and acceptance by the City Commission of the City of Winter Haven in accordance with Chapter 177 of the Florida Statutes and Chapter 21 of the City of Winter Haven Code of Ordinances.

NOW, THEREFORE, BE IT RESOLVED BY THE CITY COMMISSION OF THE CITY OF WINTER HAVEN, FLORIDA:

1. That certain plat entitled "Crescent Pointe" and showing the following described property, to wit: See Exhibits "A" and "B" which are attached hereto and made a part hereof, was presented to the City Commission for approval on the 10th Day of March, 2025. The City Commission having reviewed said plat and having been otherwise fully advised in the premises, hereby approves said plat for filing and accepts the dedications notated thereon in accordance with Chapter 177, Florida Statutes subject to the conditions set forth herein below.

2. The City's affirmative acceptance of potable water, wastewater, reuse, and roadway infrastructure should not be construed as an affirmative acceptance by the City of any maintenance and/or other responsibilities for the stromwater drainage facilities and any other dedication notated on said plat related thereto, which shall remain the responsibility of the entity and/or individuals to whom they are dedicated on the Plat

5. The administrative correction of typographical and/or scrivener's errors in this Resolution which do not affect the intent may be authorized by the City Manager or designee, without need of public hearing, by filing a corrected or recodified copy of same with the City Clerk.

6. This Resolution shall take effect immediately upon passage, provided however, that a certified copy of this Resolution shall be filed with the Polk County Board of County Commissioners and with the Clerk of the Circuit Court in and for Polk County, Florida, and duly recorded in the Public Records of Polk County, Florida.

INTRODUCED AND PASSED by the City Commission of the City of Winter Haven, Florida, in regular session this 10th day of March, 2025.

CITY OF WINTER HAVEN

_____
MAYOR-COMMISSIONER
Nathaniel J. Birdsong, Jr.

ATTEST:

_____
CITY CLERK
Vanessa Castillo, MMC

Approved as to form:

_____
CITY ATTORNEY
Frederick J. Murphy, Jr.

Exhibit “A”

Location Map

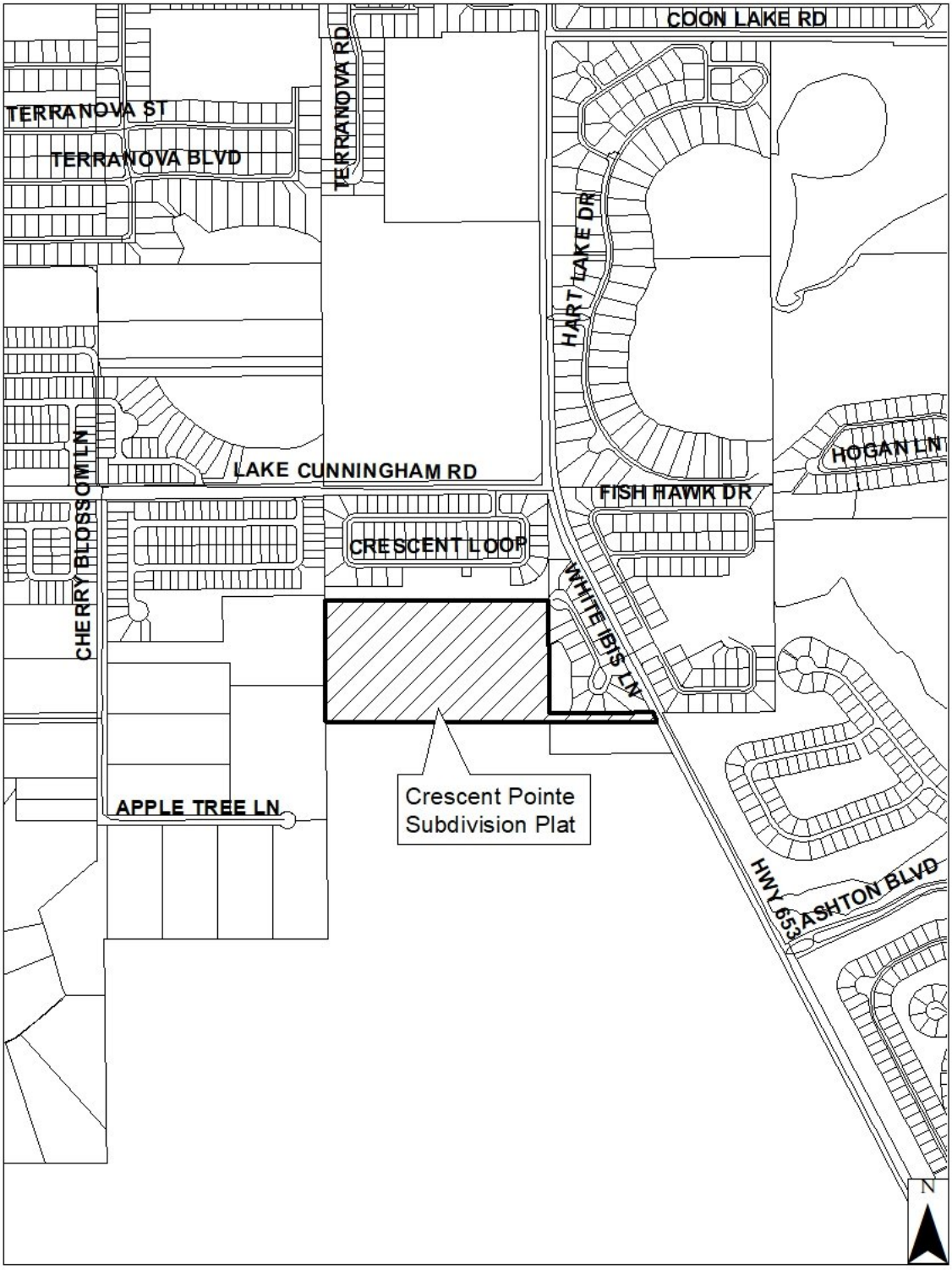

CRESCENT POINTE

P.B. ___ PG.___
SHEET 1 of 3

A SUBDIVISION LYING IN SECTIONS 23 & 24, TOWNSHIP 29 SOUTH, RANGE 26 EAST, CITY OF WINTER HAVEN, POLK COUNTY, FLORIDA

SURVEYOR'S NOTES:

1. Bearings based on Florida State Plane Coordinate System, Florida West Zone, NAD 83, 2011 adjustment for the West line of the Southeast 1/4 of the Northeast 1/4, Section 23, Township 29 South, Range 26 East; being N00°50'44"W.

2. Notice: This plat, as recorded in its graphic form, is the official depiction of the subdivided lands described herein and will in no circumstances be supplanted in authority by any other graphic or digital form of the plat. There may be additional restrictions that are not recorded on this plat that may be found in the public records of this county.

3. Computer rounding may cause slight cumulative difference in overall lengths, individual or totals and in curve data, especially in non-tangential curves.

4. This property has zone AE flood hazard areas with base flood elevations of 127.24 for the Northern area within Tract B and 118.78 for the Southern area within Tract A, both relative to the North American Vertical Datum of 1988 as shown on this map. The flood hazard boundary was provided by Engineer of Record from permitted drawings. Base flood elevations are based on the Federal Emergency Management Agency flood insurance rate map number 12105C0535F, effective date December 22, 2016, referenced to the North American Vertical Datum of 1988.

5. Lands in the vicinity of a storm water retention/detention pond, ditch, or swale may be subject to temporary standing water when conditions exceed the rate of percolation and proper drainage.

6. All lot corners are 1/2" rebars with cap stamped "LB 8112", unless otherwise indicated.

7. Coordinates shown on this map are based on the Florida State Plane Coordinate System West Zone, North American Datum of 1983, 2011 adjustment.

8. Elevations and bench marks are based on National Geodetic Survey Benchmark Designation Y736, PID DN1653 , Elevation = 125.37 referenced to the North American Vertical Datum of 1988.

9. All platted utility easements shall provide that such easements shall also be easements for the construction, installation, maintenance, and operation of cable television services provided, however, no such construction, installation, maintenance, and operation of cable television services shall interfere with the facilities and services of an electric, telephone, gas, or other public utility. In the event a cable television company damages the facilities of a public utility, it shall be solely responsible for the damages. This section shall not apply to those private easements, if any, granted to or obtained by a particular electric, telephone, gas, or other public utility. Such construction, installation, maintenance, and operation shall comply with the National Electrical Safety Code as adopted by the Florida Public Service Commission.

10. Utilization of lands within this plat are further limited and restricted by the provisions of the Declaration of Covenants, Restrictions and Conditions for Crescent Pointe of Winter Haven, as recorded in the Public Records of Polk County, Florida, ("Declaration"). And as it may be amended from time to time.

11. At the time of recording, this plat is affected by the following recorded documents found in the public records of Polk County, Florida:

A) Assignment to Sprint Communication by Order recorded in Off cial Records Book 8990, Page 632, Amended in Official Records Book 9098, Page 2143 and Notice recorded in Off cial Records Book 9116, Page 600, Public Records of Polk County, Florida. Said easement lies adjacent to railroad right of way and does not affect the lands within the bounds of this Plat.

B) Record Notice of Environmental Resource Permit recorded in Official Records Book 12603, Page 2138, Public Records of Polk County, Florida.

C) Assignment of Leases, Rents, and Profits filed June 2, 2022 in O.R. Book 12279, Page 998, Public Records of Polk County, Florida.

D) Certificate with Development Agreement recorded in O.R. Book 4066, Page 2054, Public Records of Polk County, Florida.

E) Quit Claim Deed to Polk County recorded in O.R. Book 12283, Page 2163, Public Records of Polk County, Florida, as depicted on Sheet 3 of this Plat

12. All dimension ties from right of way line to centerline are perpendicular unless otherwise noted.

LEGAL DESCRIPTION:

PARCEL 1

BEGIN AT THE NORTHWEST CORNER OF THE SOUTH 1/2 OF THE SOUTHEAST 1/4 OF THE NORTHEAST 1/4 OF SECTION 23, TOWNSHIP 29 SOUTH, RANGE 26 EAST, POLK COUNTY, FLORIDA, SAID POINT ALSO BEING THE SOUTH-WEST CORNER OF CRESCENT VIEW ACCORDING TO THE PLAT THEREOF, RECORDED IN PLAT BOOK 142, PAGES 18 & 19 AND RUN THENCE ALONG THE NORTH LINE OF SAID SOUTH 1/2 OF THE SOUTHEAST 1/4 OF THE NORTHEAST 1/4 AND SOUTH LINE OF SAID CRESCENT VIEW, N89°59'15"E A DISTANCE OF 1322.74 FEET TO THE NORTHEAST CORNER OF SAID SOUTH 1/2 OF THE SOUTHEAST 1/4 OF THE NORTHEAST 1/4, AND SOUTHEAST CORNER OF SAID CRESCENT VIEW; THENCE ALONG THE EAST LINE OF SAID SOUTH 1/2 OF THE SOUTHEAST 1/4 OF THE NORTHEAST 1/4, ALSO BEING THE WEST LINE OF EAST LAKE COVE PHASE III ACCORDING TO THE PLAT THEREOF, RECORDED IN PLAT BOOK 135, PAGES 3 & 4, PUBLIC RECORDS OF POLK COUNTY, FLORIDA, S00°51'58"E, PASSING THROUGH THE EAST QUARTER CORNER OF SAID SECTION 23 AND THE SOUTHWEST CORNER OF SAID EAST LAKE COVE PHASE III, A DISTANCE OF 779.73 FEET; THENCE DEPARTING SAID EAST LINE, N89°51'05"W A DISTANCE OF 1322.44 FEET TO THE WEST LINE OF THE NORTHEAST 1/4 OF THE SOUTHEAST 1/4 OF SAID SECTION 23; THENCE ALONG SAID WEST LINE OF THE NORTHEAST 1/4 OF THE SOUTHEAST 1/4 AND CONTINUING ALONG THE WEST LINE OF SAID SECTION 23 OF THE SOUTHEAST 1/4 OF THE NORTHEAST 1/4, N00°50'44"W A DISTANCE OF 779.64 FEET TO THE POINT OF BEGINNING.

PARCEL 2

THE NORTH 50 FEET OF THE SOUTHWEST 1/4 OF SECTION 24, TOWNSHIP 29 SOUTH, RANGE 26 EAST, LYING WEST OF THE WESTERLY RIGHT OF WAY OF CR 655 AS RECORDED IN COUNTY RIGHT OF WAY MAP BOOK 11, PAGES 14 THROUGH 22, BEING MORE PARTICULARLY DESCRIBED AS FOLLOWS:

BEGIN AT THE EAST QUARTER CORNER OF SECTION 23, TOWNSHIP 29 SOUTH, RANGE 26 EAST, POLK COUNTY, FLORIDA, SAID POINT ALSO BEING THE SOUTHWEST CORNER OF EAST LAKE COVE PHASE I ACCORDING TO THE PLAT THEREOF, RECORDED IN PLAT BOOK 135, PAGES 3 & 4, PUBLIC RECORDS OF POLK COUNTY, FLORIDA AND RUN THENCE ALONG THE EAST LINE OF THE NORTHEAST 1/4 OF THE SOUTHEAST 1/4 OF SAID SECTION 23, SOUTH 00°51'58" E A DISTANCE OF 50.00 FEET; THENCE ALONG A LINE RUNNING 50 FOOT SOUTH AND PARALLEL TO THE SOUTH BOUNDARY OF SAID EAST LAKE COVE PHASE III, AND THE NORTH LINE OF THE SOUTHWEST 1/4 OF SAID SECTION 24, N89°23'05"E A DISTANCE OF 656.41 FEET TO SAID WESTERLY MAINTAINED RIGHT OF WAY LINE; THENCE ALONG SAID WESTERLY MAINTAINED RIGHT OF WAY, NORTHERLY A DISTANCE OF 50.24 FEET, MORE OR LESS, ALONG SAID NON-TANGENT CURVE TO THE SOUTH LINE OF SAID EAST LAKE COVE PHASE I; S89°23'05"W A DISTANCE OF 618.37 FEET TO THE POINT OF BEGINNING.

CONSENT TO DEDICATION
STATE OF FLORIDA
COUNTY OF POLK

KNOW ALL MEN BY THESE PRESENTS that Prime Meridian Bank, Mortgagee of that Mortgage recorded in Official Records Book 12279, Page 982, together with Modifications recorded in Official Records Book 12851, Page 1810 and Official Records Book 12938, Page 2153, Assigned to that Assignment of Leases, Rents, and Profits filed June 2, 2022, in O.R. Book 12279 Page 998, and owner of that Mortgage Spreader Agreement recorded in Official Records Book 13137, Page 895, and that Mortgage recorded in Official Records Book 12573, Page 649, all of the public records of Polk County, Florida does hereby consent to the foregoing dedications.

Witness print _____
Witness sign _____

Prime Meridian Bank

By:_____

Witness print _____
Witness sign _____

Print Name and Title

ACKNOWLEDGMENT
STATE OF FLORIDA
COUNTY OF POLK

The foregoing instrument was acknowledged before me by means of physical presence or online notarization, this ____ day of _____, 2025, by _____, as _____ of Prime Meridian Bank and Trust on behalf of the company, who is personally known to me or has produced _____ as identification.

(AFFIX NOTARY SEAL)

_____
Notary Public
Print Name _____

My Commission Expires _____

CITY OF WINTER HAVEN ECONOMIC OPPORTUNITY
AND COMMUNITY INVESTMENT DIRECTOR:
STATE OF FLORIDA
COUNTY OF POLK

This plat has received final approval this ____ day of _____, A.D. 2025.

By:_____
Director

CITY OF WINTER HAVEN, FLORIDA CITY COMMISSION APPROVAL:
STATE OF FLORIDA
COUNTY OF POLK

This plat has received final approval this ____ day of _____, A.D. 2025 by the Winter Haven City Commission in accordance with the procedures adopted by the City commission.

Winter Haven City Commission

CLERK OF CIRCUIT COURT:
STATE OF FLORIDA
COUNTY OF POLK

I, Stacy M. Butterfield, Clerk of Circuit Court of Polk County, Florida, do hereby certify that this plat has been approved for recording on this _____ day of _____, A.D. 2025.

_____
Clerk of Circuit Court

CITY OF WINTER HAVEN CITY ENGINEER:
STATE OF FLORIDA
COUNTY OF POLK

This plat has received final approval this ____ day of _____, A.D. 2025.

By:_____
City Engineer

CITY OF WINTER HAVEN CITY CITY CLERK:
STATE OF FLORIDA
COUNTY OF POLK

This plat has received final approval this ____ day of _____, A.D. 2025.

By:_____
City Clerk

DEDICATION
STATE OF FLORIDA
COUNTY OF POLK

KNOW ALL MEN BY THESE PRESENTS that GE Investments of Polk, LLC, a Florida limited liability company, the owner of the hereon described lands, does hereby cause this plat of Crescent Pointe to be made and hereby dedicates the following forever:

1.) To Crescent Pointe of Winter Haven Homeowners' Association, Inc., a Florida not for profit corporation ("Association") Tract A for storm water, conservation, landscape and wall, Tract B for floodplain compensation, private drainage easement, private landscape easement, and the private drainage & landscape easement shown hereon.

2.) To the City of Winter Haven, Florida, its successors and assigns, Tract C and Tract D for public right of way and the public utility easements shown hereon for the purposes indicated.

3.) To the City of Winter Haven, Florida, its successors and assigns, an Exclusive Utility Easement, lying on a portion of Lot 28 and a portion of Tract B, as shown hereon for the purpose indicated.

Witness print _____
Witness sign _____

GE Investments of Polk, LLC,
a Florida Limited Liability Company

Witness print _____
Witness sign _____

By:_____
Edwere H. Ladeer, Jr., its Manager

ACKNOWLEDGMENT
STATE OF FLORIDA
COUNTY OF POLK

The foregoing instrument was acknowledged before me by means of physical presence or online notarization, this ____ day of _____, 2025, by Edward H. Ladeer, Jr., Manager of GE Investments of Polk, LLC, a Florida Limited Liability Company, on behalf of the company, who is personally known to me or has produced _____ as identification.

(AFFIX NOTARY SEAL)

_____
Notary Public
Print Name _____

My Commission Expires _____

CITY SURVEYOR'S APPROVAL (CONSULTANT)
STATE OF FLORIDA
COUNTY OF POLK

This plat has been reviewed and found to be substantially in compliance with the provisions of Chapter 177, Part 1, Florida Statutes, relating to the making of maps and plats.

_____ Date _____
Jeffrey P. Ammermann
Florida Registration LS 7388
On behalf of Stillman
Florida Registration LB 262

SURVEYOR'S CERTIFICATE
STATE OF FLORIDA
COUNTY OF POLK

I hereby certify that this plat is a true and correct representation of the hereon described land which was recently surveyed and platted under my direction and supervision, and that permanent reference monuments and permanent control points are set in accordance with Part I Chapter 177, Florida Statutes. The Plat complies with all the requirements of Part I Chapter 177, Florida Statutes.

Date:_____

_____
Robert E. Lazerby, IV
Florida Registration Number 6369
Basepoint Surveying, Inc. LB # 8112
Mailing: P.O. Box 6137, Lakeland, FL 33807
Physical: 1303 Woodlawn Avenue, Sarasota, FL 33830
Phone: (863) 537-74 3
Corporation number LB 81 2

SEAL

PREPARED BY:
BASEPOINT SURVEYING, INC.
MAILING: P.O. BOX 6137,
LAKELAND, FL 33807
PHYSICAL: 1303 E.
WOODLAWN AVE.
SARASOTA, FL 33830
(863) 537-7423
AUTHORIZATION # LB 8112

Exhibit "B"
Page 2 of 3

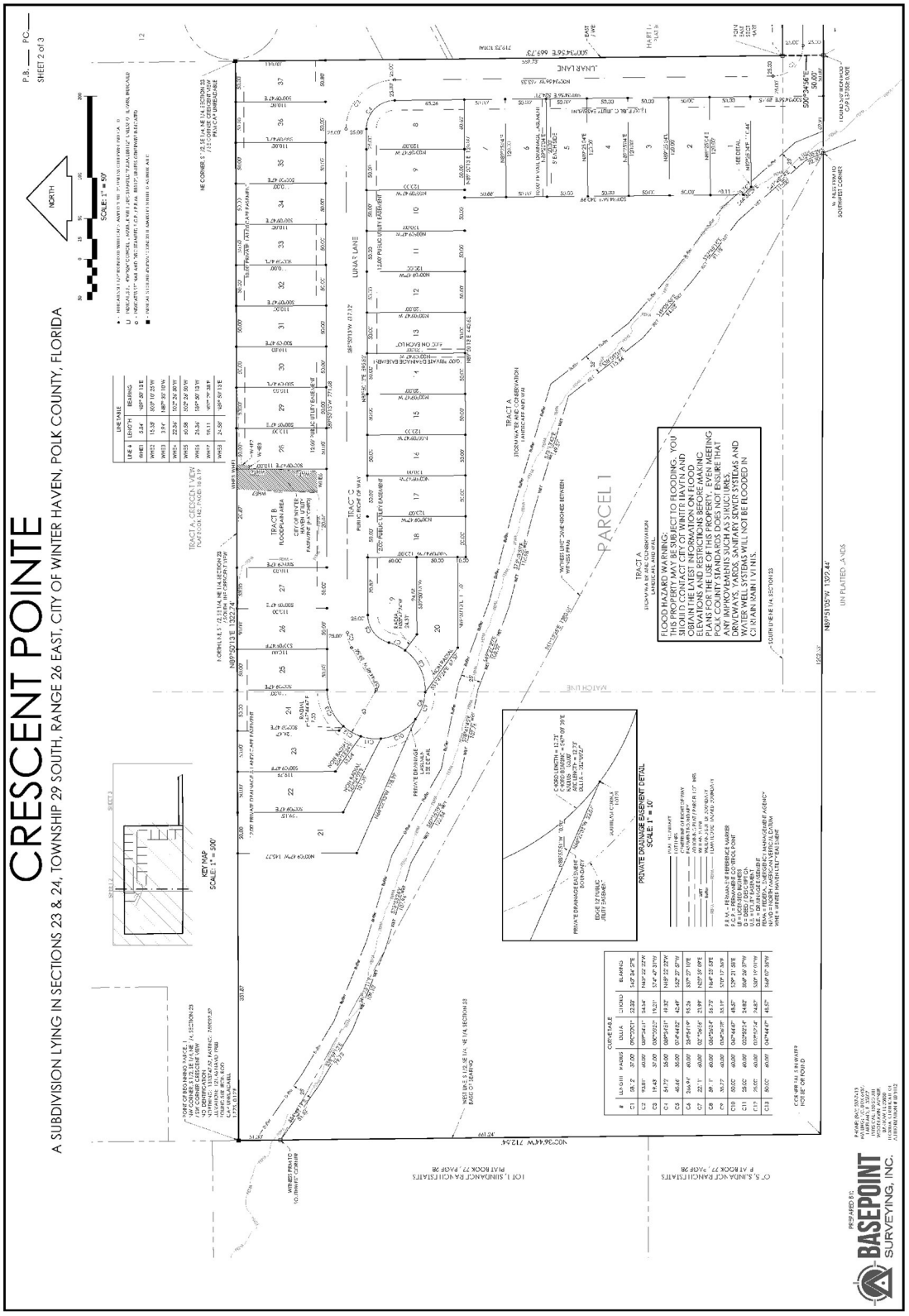

Exhibit “B”
Page 3 of 3

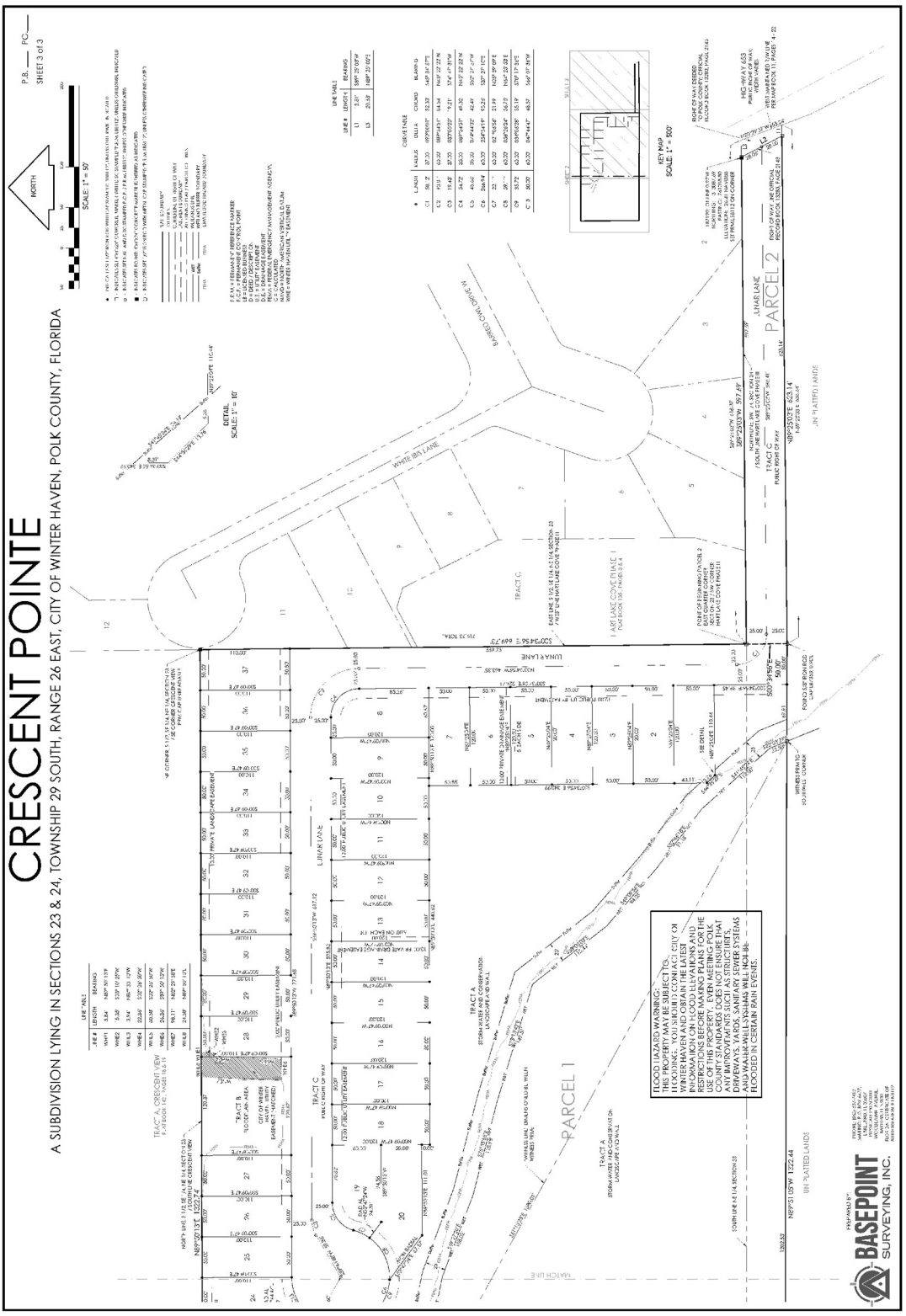

DATE: February 20, 2025

TO: Honorable Mayor and City Commissioners

VIA: T. Michael Stavres, City Manager
Michael Carnevale, Deputy City Manager
Eric Labbe, Economic Opportunity & Community Investment Director
Sean Byers, Planning Manager

FROM: Heather Reuter, Senior Planner

SUBJECT: Ordinance O-25-05: Request by AVID Group, LLC to rezone a parcel from Industrial- Light (I-1) zoning district to Commercial- Highway (C-3) zoning district. General Location: A parcel generally located at the southwest corner of the intersection of Dundee Road and Overlook Drive, SE. The area covered by this request is 4.89± acres.

BACKGROUND

AVID Group, LLC, petitioner, requests the City rezone a parcel from Industrial- Light (I-1) zoning district to Commercial- Highway (C-3) zoning district. The parcel, containing 4.89± acres, is generally located at the southwest corner of the intersection of Dundee Road and Overlook Drive, SE. The petitioner intends to develop the property with a three lot commercial subdivision with uses and development standards consistent with the C-3 zoning district.

As the Neighborhood Mixed Use Hub Future Land Use designation will remain, the maximum development potential is unchanged; therefore, there is no increase in potential infrastructure demands beyond what is currently allowed.

SURROUNDING USES

The subject property is located along the Dundee Road mixed use corridor which consists of a mixture of industrial, commercial, and residential. Immediate surrounding uses include a Publix shopping center and commercial outparcels across Dundee Road to the north; Bentley Brothers citrus business across Overlook Drive, SE to the east; the Overlook Ridge Subdivision to the south; and the East Haven RV Park to the west.

COMPREHENSIVE PLAN

The current Future Land Use of the subject area is Neighborhood Mixed Use Hub. The requested Commercial- Highway (C-3) zoning district is consistent with the Neighborhood Mixed Use Hub Future Land Use.

FINANCIAL IMPACT

There is no direct financial impact to the City with this request.

This is a request initiated by an application by a private party. In accordance with Chapter 2024-145, Laws of Fla. (CS/CS/SB 1628 (2024)), ordinances initiated by an application by a private party are exempt from providing Business Impact Estimates.

STRATEGIC PLAN ALIGNMENT

This is a routine zoning amendment associated with normal operations of the City not specifically defined as a goal or strategy within the Strategic Plan. However, it is aligned with the Responsible Government Strategic Pillar.

PLANNING COMMISSION RECOMMENDATION

The Planning Commission, at its February 4, 2025 regular meeting, voted to recommend approval of this request. No members of the public spoke.

NOTIFICATION

All notification requirements for this request were met.

CONCLUSION

Staff's review of this request yields the following conclusions:

- The rezoning to the C-3 zoning district is consistent with the property's location along an arterial highway corridor and with developed uses and City designations in the area; and

- As the Neighborhood Mixed Use Hub Future Land Use designation will remain, the maximum development potential is unchanged; therefore, there is no increase in potential infrastructure demands beyond what is currently allowed.

RECOMMENDATION

Staff recommends City Commission approve Ordinance O-25-05.

ATTACHMENTS

- Future Land Use Map
- Zoning Map
- Aerial Map
- Ordinance O-25-05

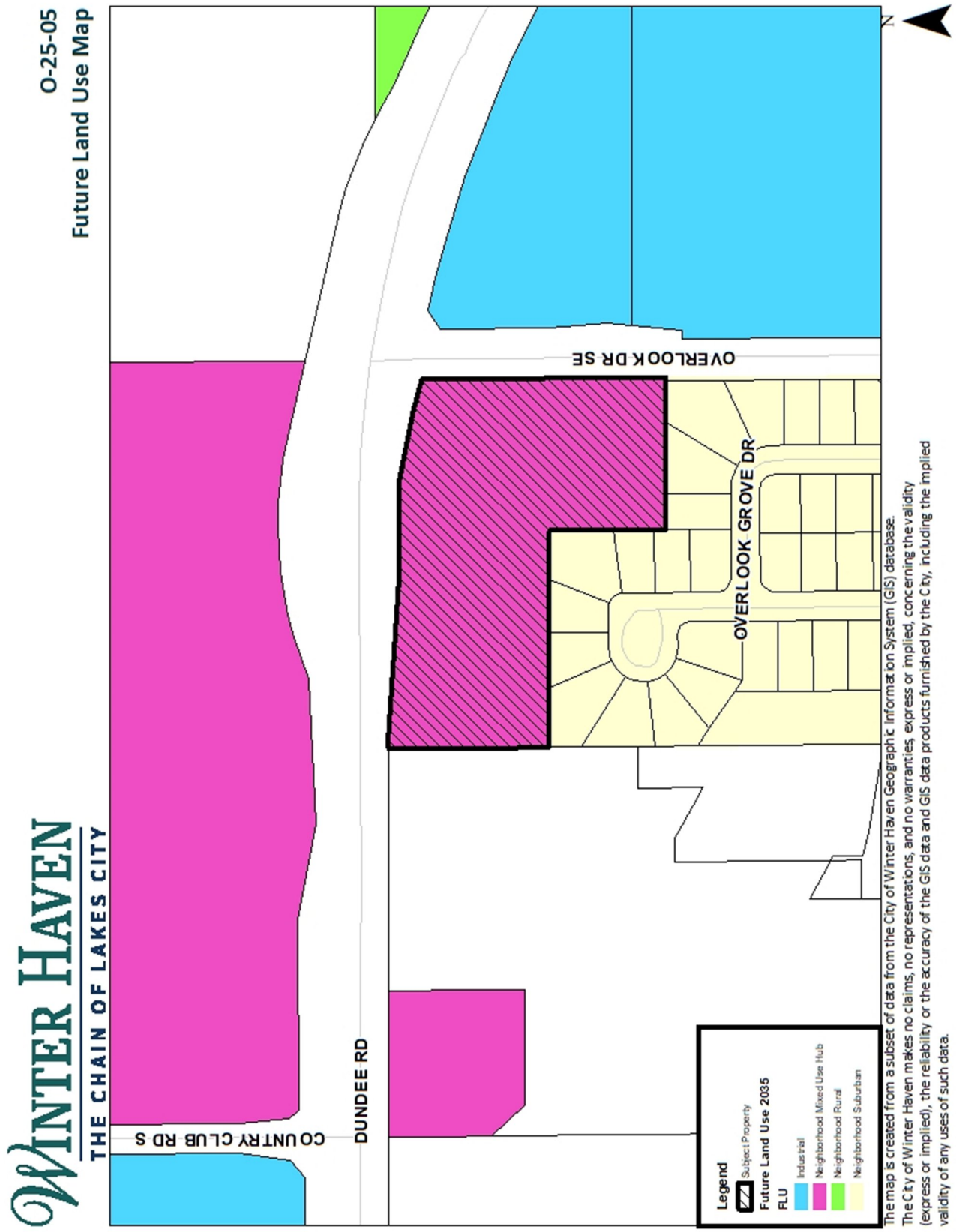
O-25-05
Future Land Use Map
WINTER HAVEN
THE CHAIN OF LAKES CITY
OVERLOOK DR SE
OVERLOOK GROVE DR
DUNDEE RD
COUNTRY CLUB RD S
N
Legend
Subject Property
Future Land Use 2035
FLU
Industrial
Neighborhood Mixed Use Hub
Neighborhood Rural
Neighborhood Suburban
The map is created from a subset of data from the City of Winter Haven Geographic Information System (GIS) database.
The City of Winter Haven makes no claims, no representations, and no warranties, express or implied, concerning the validity
(express or implied), the reliability or the accuracy of the GIS data and GIS data products furnished by the City, including the implied
validity of any uses of such data.

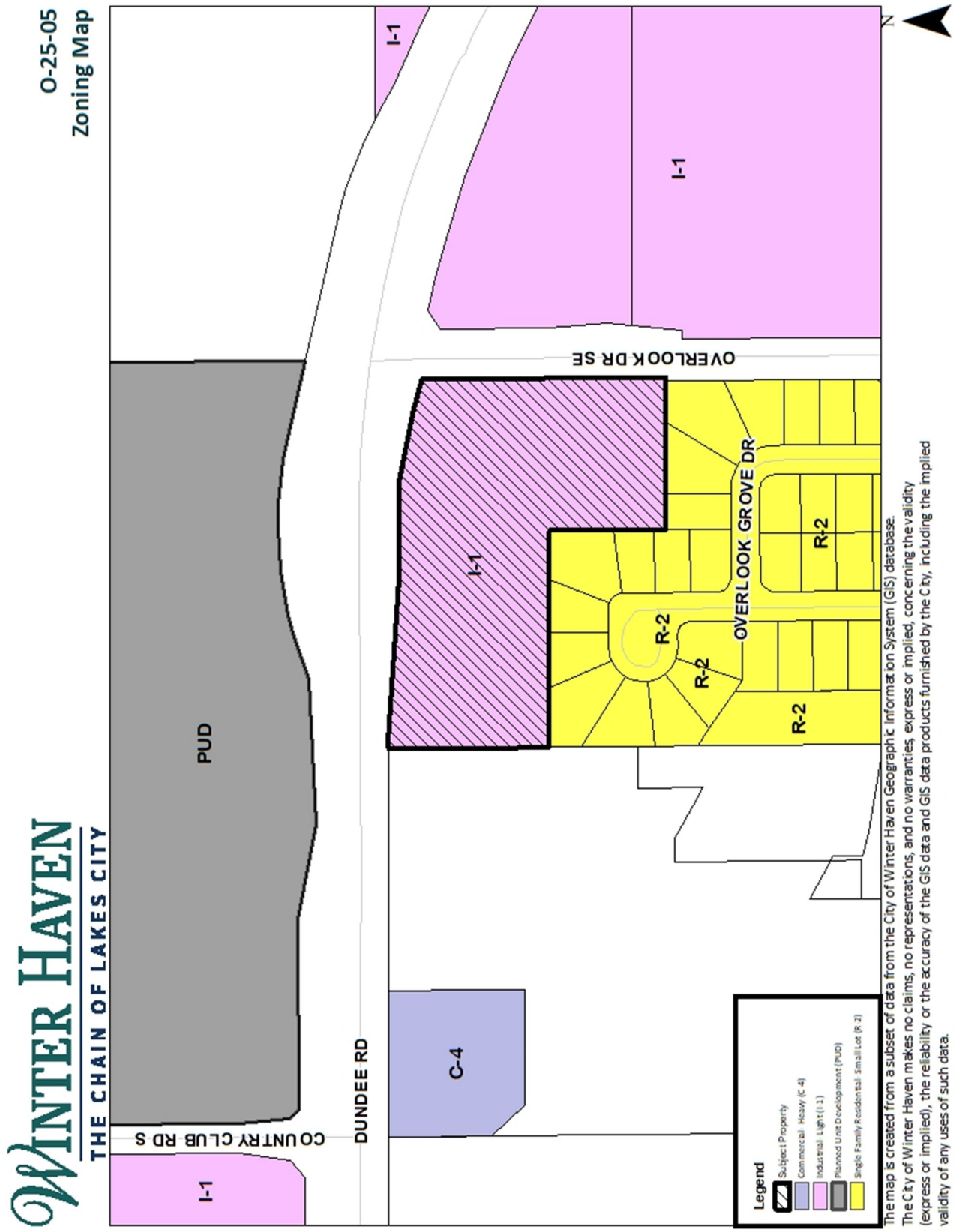
O-25-05
Zoning Map
I-1
I-1
OVERLOOK DR SE
PUD
I-1
OVERLOOK GROVE DR
R-2
R-2
R-2
R-2
COUNTRY CLUB RD S
DUNDEE RD
C-4
I-1
Legend
Subject Property
Commercial: Heavy (C-4)
Industrial: Light (I-1)
Planned Unit Development (PUD)
Single Family Residential: Small Lot (R-2)
N
WINTER HAVEN
THE CHAIN OF LAKES CITY
The map is created from a subset of data from the City of Winter Haven Geographic Information System (GIS) database.
The City of Winter Haven makes no claims, no representations, and no warranties, express or implied, concerning the validity
(express or implied), the reliability or the accuracy of the GIS data and GIS data products furnished by the City, including the implied
validity of any uses of such data.

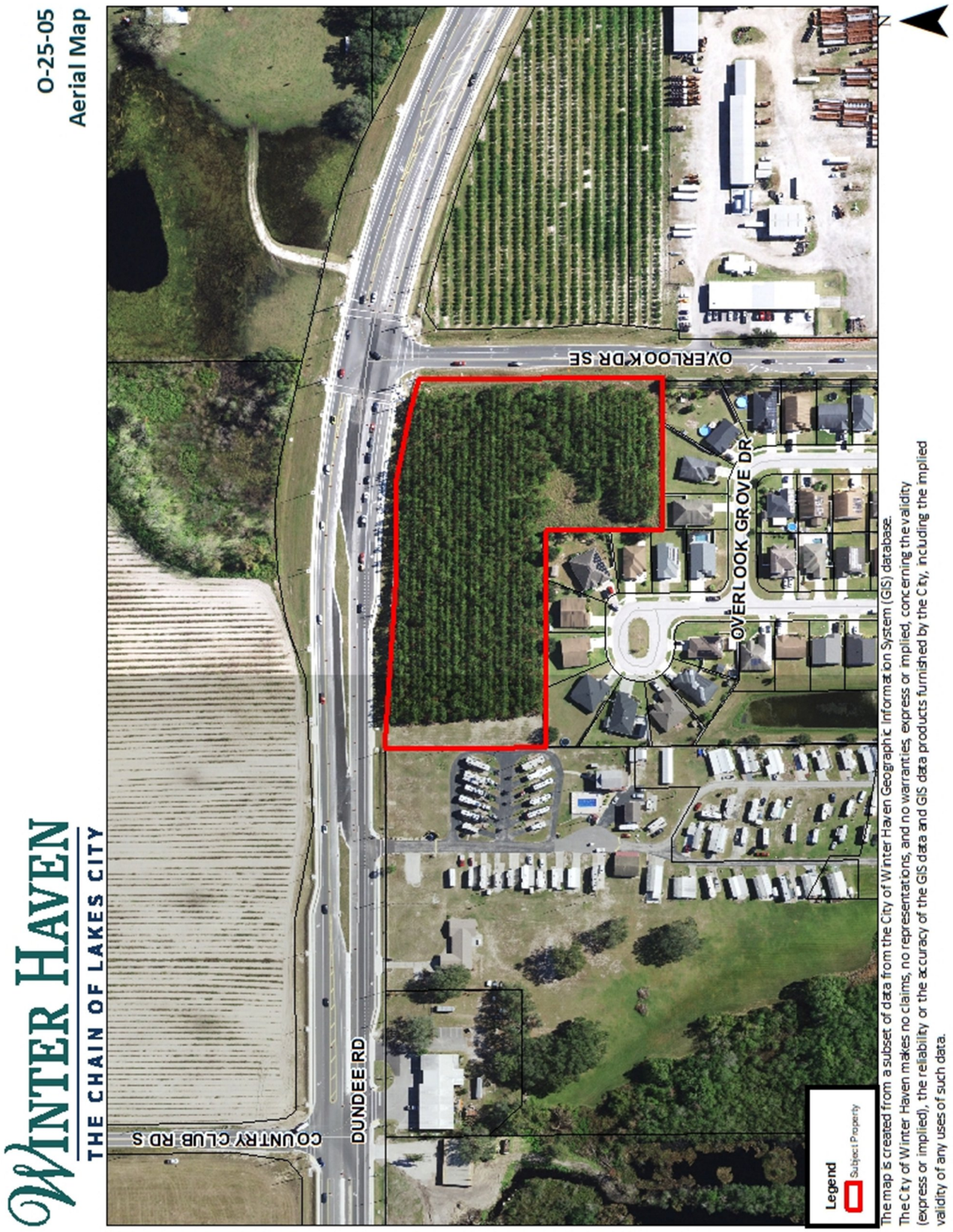
O-25-05
Aerial Map
WINTER HAVEN
THE CHAIN OF LAKES CITY
OVERLOOK DR SE
OVERLOOK GROVE DR
DUNDEE RD
COUNTRY CLUB RD S
Legend
Subject Property
The map is created from a subset of data from the City of Winter Haven Geographic Information System (GIS) database.
The City of Winter Haven makes no claims, no representations, and no warranties, express or implied, concerning the validity (express or implied), the reliability or the accuracy of the GIS data and GIS data products furnished by the City, including the implied validity of any uses of such data.

ORDINANCE NO. O-25-05

AN ORDINANCE AMENDING CHAPTER 21 OF THE CODE OF ORDINANCES OF THE CITY OF WINTER HAVEN, FLORIDA, BY REZONING ONE (1) PARCEL FROM INDUSTRIAL-LIGHT (I-1) ZONING DISTRICT TO COMMERCIAL- HIGHWAY (C-3) ZONING DISTRICT; PROVIDING FOR THE ADMINISTRATIVE CORRECTION OF SCRIVENER'S ERRORS; REPEALING ALL ORDINANCES IN CONFLICT HEREWITH; AND PROVIDING AN EFFECTIVE DATE. (General Location: A parcel generally located at the southwest corner of the intersection of Dundee Road and Overlook Drive, SE. The area covered by this request is 4.89± acres.)

WHEREAS, there has been a request to rezone the property described below, and;

WHEREAS, the action will further the general health, safety, and welfare and be a benefit to the City as a whole, and;

WHEREAS, the requested zoning is consistent with the Future Land Use Element of the Winter Haven Comprehensive Plan.

WHEREAS, the request implements requirements contained in Part II, Chapter 163 of Florida Statutes, and therefore is exempt from requiring a Business Impact Estimate as set forth by Chapter 2023-309, Laws of Fla. (CS/CS/SB 170 (2023)).

NOW THEREFORE, BE IT ENACTED BY THE PEOPLE OF THE CITY OF WINTER HAVEN, FLORIDA, AS FOLLOWS:

1. That Chapter 21 of the Code of Ordinances of the City of Winter Haven, Florida, is hereby amended to rezone that land, described in Exhibit "A" attached hereto and made a part of this ordinance, from Industrial- Light (I-1) zoning district to Commercial- Highway (C-3) zoning district.

2. This ordinance shall not be codified, but the City Clerk shall retain this ordinance as a permanent record of action taken by the City Commission of the City of Winter Haven.

3. The correction of typographical and/or scrivener's errors which do not affect the intent may be authorized by the City Manager or designee, without need of public hearing, by filing a corrected or recodified copy of same with the City Clerk.

4. All ordinances in conflict herewith are hereby repealed.

5. This Ordinance shall be effective immediately upon the effective date; however, that such change shall first be noted on the official zoning map of the City of Winter Haven.

INTRODUCED on first reading this 10th day of March, 2025.

PASSED on second reading this 24th day of March, 2025.

CITY OF WINTER HAVEN, FLORIDA

_____
MAYOR-COMMISSIONER
Nathaniel J. Birdsong, Jr.

ATTEST:

_____
CITY CLERK
Vanessa Castillo, MMC

Approved as to form:

_____
CITY ATTORNEY
Frederick J. Murphy, Jr.

Exhibit “A”

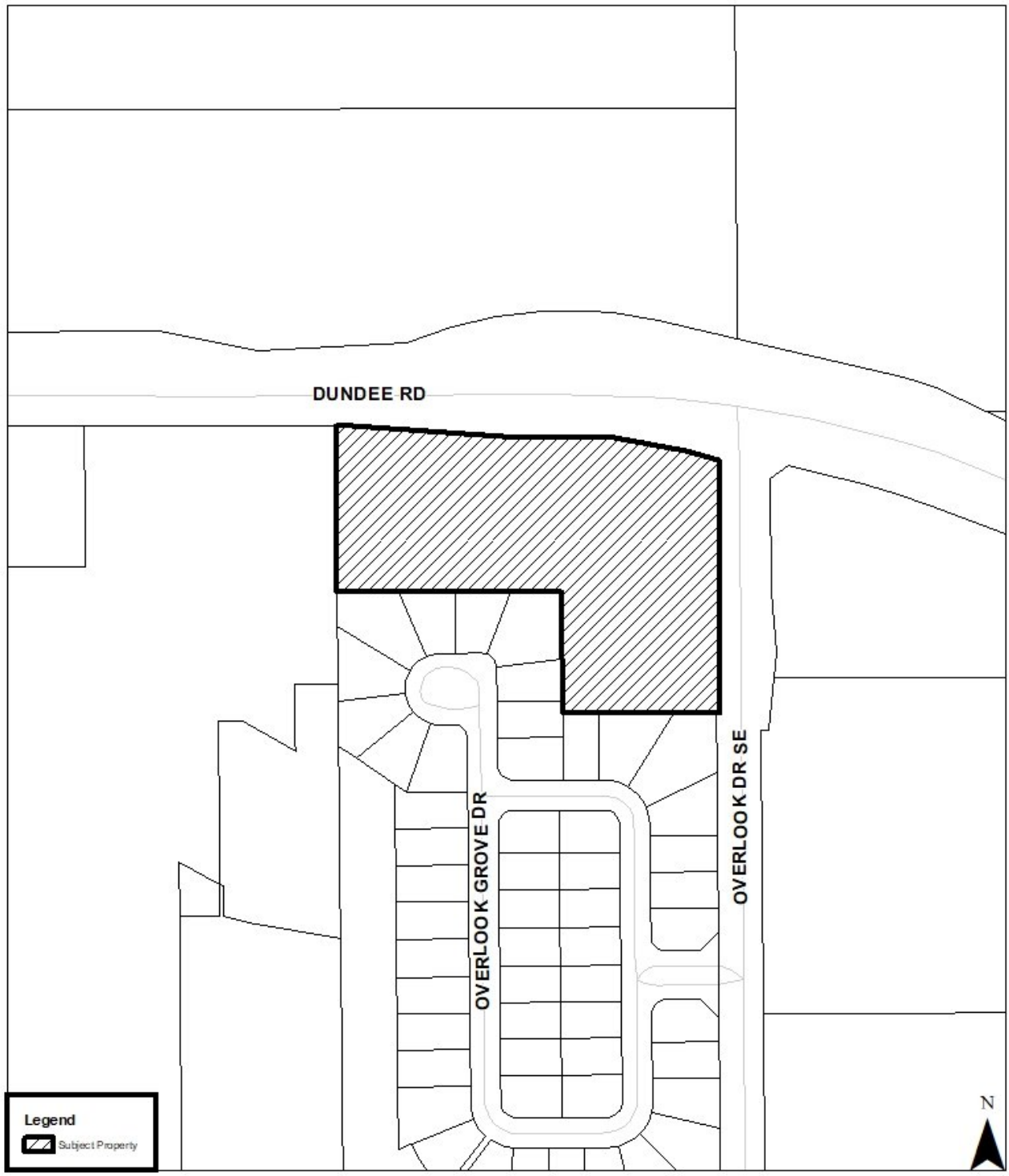
DUNDEE RD
OVERLOOK GROVE DR
OVERLOOK DR SE
Legend
Subject Property
N

DATE: February 27, 2025

TO: Honorable Mayor and City Commissioners

VIA: T. Michael Stavres, City Manager
M.J. Carnevale, Deputy City Manager

FROM: Charlie Bird, Assistant City Manager – Public Safety
Julie Adams, Parks, Recreation & Culture Department Director

SUBJECT: Ordinance No. O-25-13 adding a new Section 15-290 of Article VII, Chapter 15, of the Code of Ordinances of the City of Winter Haven, Florida regarding Prohibiting Smoking and Vaping in Public Parks and Public Beaches owned and/or leased by the City of Winter Haven, Florida.

BACKGROUND

Section 386.209 of the Florida Statutes (2025) expressly authorizes municipalities to adopt and enforce restrictions as to smoking within the boundaries of any public parks and/or public beaches that the municipality owns and/or leases, and to further restrict smoking within the boundaries of public parks and/or public beaches that are within the municipality's jurisdiction but are owned by the county, unless such restriction conflicts with a county ordinance.

The Board of County Commissioners for Polk County, Florida adopted a similar ordinance prohibiting smoking and vaping in public parks owned or leased by Polk County, Florida via the adoption of Polk County Ordinance 2023-068 on November 7, 2023.

Despite the foregoing, Section 386.209 of the Florida Statutes (2025) nonetheless preempts municipalities from further restricting unfiltered cigars beyond those restrictions established by state law.

Based on City Commission consensus and direction, Ordinance No. O-25-13 is presented for the City Commissions' consideration and adoption. Ordinance No. O-25-13 establishes and adopts a new Section 15-290 of Chapter 15, Article VII, of the Code of Ordinances (as shown in underline format) prohibiting Smoking and Vaping in public parks and/or public beaches owned and/or leased by the City and located within the municipal limits of the City of Winter Haven, Florida as authorized by Section 386.209 of the Florida Statutes. Ordinance No. O-25-13 is very similar to what Polk County adopted in 2023. Ordinance No. O-25-13 has been reviewed and approved by the City Manager and the City Attorney.

FINANCIAL IMPACT

There is no expected financial impact as a result of the adoption of this Ordinance.

BUSINESS IMPACT ESTIMATE

In compliance with Section 166.041(4)(a) of the Florida Statutes, the following Business Impact Estimate is provided:

1. Ordinance No. O-25-13 prohibits smoking and vaping in public parks and/or public beaches located within the City of Winter Haven in an effort to affirm and promote a healthy environment within the City. Thus, it promotes the public health, safety, morals and welfare of the citizens, residents and visitors to the City.
2. As a result of the adoption of Ordinance No. O-25-13, there is no direct economic impact on private, for profit business in the City, nor are there any direct compliance costs that businesses may reasonably incur or any new charge or fee on such businesses within the City. Further, there are no City regulatory costs and/or revenues imposed on any businesses within the City.
3. There are no businesses likely to be impacted by the adoption of Ordinance No. O-25-13. However, there may potentially be indirect impacts on the sale of tobacco products within the City but such potential impacts are so de-minimus and/or negligible that same are not ascertainable.

STRATEGIC PLAN ALIGNMENT

This is a routine ordinance amendment associated with normal operations of the City not specifically defined as a goal or strategy within the Strategic Plan. However, it is aligned with the Quality of Life and Responsible Government Strategic Pillars.

RECOMMENDATION

The City Manager and City Attorney recommend the City Commission adopt Ordinance No. O-25-13 and authorize the City Manager and/or his designee to take all necessary actions related to implementation and enforcement of same.

ATTACHMENTS

- Ordinance No. O-25-13
- Polk County Ordinance 2023-068 adopted on November 7, 2023

ORDINANCE NO. O-25-13

AN ORDINANCE ADDING A NEW SECTION 15-290 OF ARTICLE VII, CHAPTER 15, OF THE CODE OF ORDINANCES OF THE CITY OF WINTER HAVEN, FLORIDA REGARDING PROHIBITING SMOKING AND VAPING IN PUBLIC PARKS AND PUBLIC BEACHES OWNED AND/OR LEASED BY THE CITY OF WINTER HAVEN, FLORIDA; MAKING FINDINGS; PROVIDING FOR EXCEPTIONS AND ENFORCEMENT; PROVIDING FOR DEFINITIONS, CODIFICATION, THE ADMINISTRATIVE CORRECTION OF SCRIVENER'S ERRORS, SEVERABILITY, AND A REPEAL OF CONFLICTING ORDINANCES AND RESOLUTIONS; AND PROVIDING FOR AN EFFECTIVE DATE.

WHEREAS, Section 386.209 of the Florida Statutes (2025) expressly authorizes municipalities to adopt and enforce restrictions as to smoking within the boundaries of any public parks and/or public beaches that the municipality owns and/or leases, and to further restrict smoking within the boundaries of public parks and/or public beaches that are within the municipality's jurisdiction but are owned by the county, unless such restriction conflicts with a county ordinance; and

WHEREAS, the Board of County Commissioners for Polk County, Florida adopted a similar Ordinance prohibiting smoking, vaping and the use of all other tobacco products within public parks owned or leased by Polk County, Florida via the adoption of Polk County Ordinance 2023-068 on November 7, 2023; and

WHEREAS, despite the foregoing, Section 386.209 of the Florida Statutes (2025) nonetheless preempts municipalities from further restricting unfiltered cigars beyond those restrictions established by state law; and

WHEREAS, to the extent permitted by law, the City Commission of the City of Winter Haven, Florida desires to restrict vaping and the smoking of tobacco at public parks and/or public beaches owned and/or leased by the City and located within the municipal limits of the City of Winter Haven, Florida; and

WHEREAS, the City Commission of the City of Winter Haven, Florida finds that it is expedient to add a new Section 15-290 of Chapter 15, Article VII, of the Code of Ordinances prohibiting Smoking and Vaping in public parks and/or public beaches owned and/or leased by the City and located within the municipal limits of the City of Winter Haven, Florida; and

WHEREAS, the City Commission of the City of Winter Haven, Florida finds that the provisions of this Ordinance are in the best interests of the citizens of and visitors to the City of Winter Haven, Florida and that such restrictions are necessary for the health, safety, and welfare of the citizens of and visitors to the City of Winter Haven, Florida and to affirm and promote a healthy environment within the City of Winter Haven, Florida.

NOW THEREFORE, BE IT ENACTED BY THE PEOPLE OF THE CITY OF WINTER HAVEN, FLORIDA, AS FOLLOWS:

1. The above Whereas clauses are incorporated herein as true and correct statements which form a factual and material basis for the adoption of this Ordinance.
2. Section 15-290 of Chapter 15 of Article VII of the Code of Ordinances of the City of Winter Haven, Florida, is hereby added as set forth herein (new provisions are underlined):

Section 15-290 – Prohibiting smoking and vaping at publicly owned and/or leased Parks and Beaches within the City.

(a) Definitions. For purposes of this section the terms listed have the following meanings:
- (i) "Smoking" means inhaling, exhaling, burning, carrying, or possessing any lighted or heated tobacco product, including cigarettes, filtered cigars, pipe tobacco, and any other lighted or heated tobacco product whether natural or synthetic. For the purposes of this Section only, smoking does not include the use of unfiltered cigars (pursuant to Section 386.209 of the Florida Statutes).
- (ii) "Tobacco Product" means:
  - a. Any product containing, made, or derived from tobacco, nicotine or nicotine analogues that is intended for human consumption or is likely to be consumed, whether inhaled, absorbed, or ingested by any other means, including but not limited to, a cigarette, a cigar, pipe tobacco, snuff, or snus;
  - b. Any vapor-generating electronic device as defined in this article/chapter and any substances that may be aerosolized or

vaporized by such device, whether or not the substance contains nicotine; or

c. Any component, part, accessory, of (a) or (b), whether or not any of these contains tobacco or nicotine, including but not limited to filters, rolling papers, blunt or hemp wraps, hookahs, and pipes.

(iii) "Tobacco Product" does not mean drugs, devices, or combination products authorized for sale by the U.S. Food and Drug Administration, as those terms are defined in the Federal Food, Drug, and Cosmetic Act.

(iv) "Tobacco Product Waste" means any material that is left over and regularly intended to be discarded after the use or consumption of a tobacco product. Tobacco Product Waste includes but is not limited to, discarded cigarette butt filters, cigar or cigarillo tips, cigarette packs, cigar or cigarillo wrappers, vapor-generating electronic devises of all types, vapor-generating electronic device cartridges or refill containers, plastic packaging, foil, or other disposable tobacco product remnants or tobacco product packaging in any form.

(v) "Vape" or "vaping" means to inhale or exhale vapor produced by a vapor-generating electronic device or to possess a vapor-generating electronic device while that device is actively employing an electronic, a chemical, or a mechanical means designed to produce vapor or aerosol from a nicotine product or any other substance. The term does not include the mere possession of a vapor-generating electronic device.

(vi) "Vapor-generating Electronic Device" means an electronic device that may be used to deliver any aerosolized or vaporized substance to the person inhaling from the device, including, but not limited to, an e-cigarette, e-cigar, e-pipe, vape pen, or e-hookah.

(vii) All other definitions in this Chapter, Article, and Code of Ordinances shall apply.

(b) Prohibited Acts:

Except for the smoking of unfiltered cigars, smoking or vaping within public parks and public beaches owned and/or leased by the City and within the City of Winter Haven, Florida municipal limits is prohibited. Regardless of the foregoing, nothing in this section may be interpreted as permitting or allowing the smoking of unfiltered cigars when such activity is otherwise prohibited or forbidden by general law.

(c) Other Requirements and Prohibitions.

The City Manager or his/her designee shall post at least one clear, conspicuous and unambiguous "No Smoking or Vaping" sign or other similar sign at the City Manager's discretion at each point of ingress to the area, and in at least one other conspicuous location where individuals congregate (such as restrooms, playgrounds, or buildings) within each recreational area within any public parks and public beaches owned and/or leased by the City and located within the municipal limits of the City of Winter Haven, Florida. For purposes of this section, the City Manager or his/her designee shall be responsible for the posting of signs in regulated facilities owned or leased in whole or in part by the City.

Notwithstanding this provision, the presence or absence of signs shall not be a defense to a charge of smoking or vaping in violation of any other provision of this Ordinance.

(d) Compliance and Enforcement.

Individuals acting in violation of this Ordinance will be reminded and asked to comply by the City Manager or his/her designee. Individuals who violate this Ordinance may be asked to leave the public park and/or public beach.

3. This Ordinance shall be codified and made a part of the Code of Ordinances of the City of Winter Haven. It is the intention of the City Commission that the provisions of this Ordinance shall become and be made a part of the City of Winter Haven Code of Ordinances; and that sections of this Ordinance may be renumbered or relettered and the word *Ordinance* may be changed to *section, article,* or such other appropriate word or phrase in order to accomplish such intentions; and regardless of whether such inclusion in the code is accomplished, sections of this Ordinance may be renumbered or relettered and typographical errors which do not affect the intent may be authorized by the City Manager or his/her designee without need of public hearing, by filing a corrected or recodified copy of same with the City Clerk.
4. All Ordinances or parts of Ordinances and Resolutions in conflict or inconsistent with the provisions of this Ordinance are hereby repealed but only to the extent necessary to give this Ordinance full force and effect.
5. If any section, subsection or provision of this Ordinance, or its application to any person or circumstance, is for any reason held to be invalid or unenforceable, such invalidity or unenforceability shall not affect the validity or enforceability of the remaining sections or provisions of this Ordinance or its application to any other person or circumstance. The City Commission hereby declares that it would have adopted each section, subsection or provision hereof independently, irrespective of the fact that any one or more other sections, subsections or provisions hereof be declared invalid or unenforceable.
6. This Ordinance shall take effect immediately upon passage on second reading.

INTRODUCED on first reading this 10th day of March, 2025.

PASSED on second reading this 24th day of March, 2025.

CITY OF WINTER HAVEN, FLORIDA

_____
MAYOR-COMMISSIONER

ATTEST:

_____
CITY CLERK

Approved as to form:

_____
CITY ATTORNEY

ADOPTED
11/7/23

ORDINANCE NO. 2023- 068

AN ORDINANCE OF THE POLK COUNTY BOARD OF COUNTY COMMISSIONERS PROHIBITING SMOKING AND VAPING IN PUBLIC PARKS OWNED OR LEASED BY POLK COUNTY; PROVIDING FOR SEVERABILITY; PROVIDING FOR AN EFFECTIVE DATE

WHEREAS, tobacco use causes death and disease and continues to be an urgent public health threat,

WHEREAS, secondhand smoke exposure is harmful,

WHEREAS, there is emerging evidence that exposure to the aerosol produced by a vapor-generating electronic device may be harmful,

WHEREAS, tobacco waste is a major, consequential, and persistent source of litter,

WHEREAS, cigarettes, cigarette butts, smokeless tobacco, and vapor-generating electronic devices pose a health threat of poisoning to young children,

WHEREAS, the State of Florida enacted chapter 2022-213, Laws of Florida, which grants counties and municipalities the legal authority to restrict smoking within the boundaries of county and municipal owned public beaches and public parks, but which includes an exception for unfiltered cigars; and

WHEREAS, chapter 2022-213, Laws of Florida is now codified at F.S. 386.209, which retains an express preemption of the regulation of smoking to the State except for the limited exception to regulate smoking at county and city owned parks and beaches; and

NOW THEREFORE, in order to provide for the public health, safety, and welfare, reduce unwanted and unwelcome exposure to secondhand smoke and the secondhand aerosol produced by vapor-generating electronic devices, assure cleaner and more hygienic parks for unincorporated Polk County its residents and visitors, it is the intent of the Polk County Board of County Commissioners in enacting this ordinance, to prohibit smoking and vaping in parks which are used by or open to the public and to prohibit smoking and vaping waste in those areas thereby affirming and promoting a healthy environment in unincorporated Polk County.

BE IT ORDAINED BY THE BOARD OF COUNTY COMMISSIONERS OF POLK COUNTY, FLORIDA THAT:

Section 1. DEFINITIONS. The following words and phrases, whenever used in this section shall have the meanings defined in this section unless the context clearly requires otherwise:

a. "Parks" means any County owned or leased property managed by a County division or department for the purpose of recreation by the public.

b. "Smoking" means inhaling, exhaling, burning, carrying, or possessing any lighted or heated tobacco product, including cigarettes, filtered cigars, pipe tobacco, and any other lighted or heated tobacco product whether natural or synthetic. For the purposes of this policy only, smoking does not include the use of unfiltered cigars (pursuant to Florida Statute 386.209).

c. "Tobacco Product" means:

(1) any product containing, made, or derived from tobacco, nicotine or nicotine analogues that is intended for human consumption or is likely to be consumed, whether inhaled, absorbed, or ingested by any other means, including but not limited to, a cigarette, a cigar, pipe tobacco, chewing tobacco, snuff, or snus;

(2) any vapor-generating electronic device as defined in this [article/chapter] and any substances that may be aerosolized or vaporized by such device, whether or not the substance contains nicotine; or

(3) any component, part, accessory, of (1) or (2), whether or not any of these contains tobacco or nicotine, including but not limited to filters, rolling papers, blunt or hemp wraps, hookahs, and pipes.

d. "Tobacco Product" does not mean drugs, devices, or combination products authorized for sale by the U.S. Food and Drug Administration, as those terms are defined in the Federal Food, Drug, and Cosmetic Act.

e. "Tobacco Product Waste" means any material that is left over and regularly intended to be discarded after the use or consumption of a tobacco product. Tobacco Product Waste includes, but is not limited to, discarded cigarette butt filters, cigar or cigarillo tips, cigarette packs, cigar or cigarillo wrappers, vapor-generating electronic devices of all types, vapor-generating electronic device cartridges or refill containers, plastic packaging, foil, or other disposable tobacco product remnants or tobacco product packaging in any form.

f. "Vape" or "vaping" means to inhale or exhale vapor produced by a vapor-generating electronic device or to possess a vapor-generating electronic device while that device is actively employing an electronic, a chemical, or a mechanical means designed to produce vapor or aerosol from a nicotine product or any other substance. The term does not include the mere possession of a vapor-generating electronic device.

g. "Vapor-generating Electronic Device" means an electronic device that may be used to deliver any aerosolized or vaporized substance to the person inhaling from the device, including, but not limited to, an e-cigarette, e-cigar, e-pipe, vape pen, or e-hookah.

Section 2. PROHIBITION OF SMOKING AND VAPING IN RECREATIONAL AREAS.

Smoking and the use of all other tobacco products is prohibited in all parks owned by Polk County designated no smoking or vaping by the County Manager or their designee. Designation of a park as no smoking or vaping by the County Manager or their designee shall be done through a memorandum to the appropriate division. Unfiltered cigars are exempted under 386.209, Florida Statutes. If a park is designated no smoking or vaping by the County Manager, parking areas of the park shall be the designated smoking areas for the park.

Section 3. OTHER REQUIREMENTS AND PROHIBITIONS.

(a) No person shall dispose of tobacco product waste in any park.

(b) The County Manager or their designee shall post at least one clear, conspicuous and unambiguous "No Smoking or Vaping" sign or other similar sign at the County Manager's discretion at each point of ingress to the area, and in at least one other conspicuous location where individuals congregate (such as restrooms, playgrounds, or buildings) within each recreational area. For purposes of this section, the County Manager or their designee shall be responsible for the posting of signs in regulated facilities owned or leased in whole or in part by the County. Notwithstanding this provision, the presence or absence of signs shall not be a defense to a charge of smoking or vaping in violation of any other provision of this Ordinance.

Section 4. COMPLIANCE AND ENFORCEMENT.

Individuals acting in violation of this policy will be reminded and asked to comply by the County Manager or their designee. Individuals who violate this policy may be asked to leave the park.

Section 5. STATUTORY CONSTRUCTION & SEVERABILITY.

If any section, subsection or provision of this ordinance, or its application to any person or circumstance, is for any reason held to be invalid or unenforceable, such invalidity or unenforceability shall not affect the validity or enforceability of the remaining sections or provisions of this ordinance or its application to any other person or circumstance. The Board of County Commissioners hereby declares that it would have adopted each section, subsection or provision hereof independently, irrespective of the fact that any one or more other sections, subsections or provisions hereof be declared invalid or unenforceable.

SECTION 6. EFFECTIVE DATE

This Ordinance shall take effect immediately upon filing with the Office of the Florida Secretary of State.



STATE OF FLORIDA)
)
COUNTY OF POLK)

I Stacy M. Butterfield, County Clerk and Comptroller for Polk County, Florida, hereby certify that the foregoing is a true and correct copy of Ordinance No. 2023-068 adopted by the Board on November 7, 2023

WITNESS my hand and official seal on this 7th day of November 2023.

STACY M. BUTTERFIELD, CLERK

By: Yolanda Harris
Yolanda Harris
Deputy Clerk

FLORIDA DEPARTMENT of STATE

RON DESANTIS
Governor

CORD BYRD
Secretary of State

November 9, 2023

Stacy M. Butterfield
Clerk of the Circuit Court and Comptroller
Polk County
Post Office Box 988
Bartow, FL 33831-0988

Attention: Yolanda Harris

Dear Stacy Butterfield,

Pursuant to the provisions of Section 125.66, Florida Statutes, this will acknowledge receipt of your electronic copy of Polk County Ordinance No. 2023-068, which was filed in this office on November 7, 2023.

Sincerely,

Anya Owens
Administrative Code and Register Director

ACO/wlh

RECEIVED
NOV 0 9 2023
BY:

Docusign Envelope ID: EBFDF60F-F2EE-4305-9C90-D6E520CBD296

STATE OF FLORIDA DEPARTMENT OF TRANSPORTATION

PUBLIC TRANSPORTATION GRANT AGREEMENT

Form 725-000-01
STRATEGIC DEVELOPMENT
OGC 10/24

Financial Project Number(s): (item-segment-phase-sequence)		Fund(s):	DPTO	FLAIR Category:	088719
451944-1-94-01		Work Activity Code/Function:	215	Object Code:	751000
		Federal Award		Org. Code:	55012020129
		Identification Number (FAIN) – Transit only:	N/A	Vendor Number:	VF596000453002
Contract Number:	G3982	Federal Award Date:	N/A		
CFDA Number:	N/A	Agency UEI Number:			
CFDA Title:	N/A				
CSFA Number:	55.004				
CSFA Title:	Aviation Grant Program				

THIS PUBLIC TRANSPORTATION GRANT AGREEMENT ("Agreement") is entered into _____, by and between the State of Florida, Department of Transportation, ("Department"), and City of Winter Haven, ("Agency"). The Department and the Agency are sometimes referred to in this Agreement as a "Party" and collectively as the "Parties."

NOW, THEREFORE, in consideration of the mutual benefits to be derived from joint participation on the Project, the Parties agree to the following:

1. **Authority.** The Agency, by Resolution or other form of official authorization, a copy of which is attached as **Exhibit "D", Agency Resolution** and made a part of this Agreement, has authorized its officers to execute this Agreement on its behalf. The Department has the authority pursuant to Section(s) 332.007, Florida Statutes, to enter into this Agreement.

2. **Purpose of Agreement.** The purpose of this Agreement is to provide for the Department's participation in Winter Haven Airport Replace Beacon & PAPI Units, as further described in **Exhibit "A", Project Description and Responsibilities**, attached and incorporated into this Agreement ("Project"), to provide Department financial assistance to the Agency, state the terms and conditions upon which Department funds will be provided, and to set forth the manner in which the Project will be undertaken and completed.

3. **Program Area.** For identification purposes only, this Agreement is implemented as part of the Department program area selected below (select all programs that apply):

   X **Aviation**
   _ **Seaports**
   _ **Transit**
   _ **Intermodal**
   _ **Rail Crossing Closure**
   _ **Match to Direct Federal Funding** (Aviation or Transit)
   (Note: Section 15 and Exhibit G do not apply to federally matched funding)
   _ **Other**

4. **Exhibits.** The following Exhibits are attached and incorporated into this Agreement:

   X Exhibit A: Project Description and Responsibilities
   X Exhibit B: Schedule of Financial Assistance
   _ *Exhibit B1: Deferred Reimbursement Financial Provisions
   _ *Exhibit B2: Advance Payment Financial Provisions
   _ *Exhibit B3: Alternative Advanced Pay (Transit Bus Program)
   X *Exhibit C: Terms and Conditions of Construction
   X Exhibit D: Agency Resolution
   X Exhibit E: Program Specific Terms and Conditions
   X Exhibit E1: Prohibition Based on Health Care Choices
   _ Exhibit E2: Exterior Vehicle Wrap, Tinting, Paint, Marketing and Advertising (Transit)

Docusign Envelope ID: EBFDF60F-F2EE-4305-9C90-D6E520CBD296

X Exhibit F: Contract Payment Requirements
X *Exhibit G: Audit Requirements for Awards of State Financial Assistance
__ *Exhibit H: Audit Requirements for Awards of Federal Financial Assistance
__ *Exhibit I: Certification of Disbursement of Payment to Vehicle and/or Equipment Vendor
__ *Additional Exhibit(s):

*Indicates that the Exhibit is only attached and incorporated if applicable box is selected.

5. Time. Unless specified otherwise, all references to "days" within this Agreement refer to calendar days.

6. Term of Agreement. This Agreement shall commence upon full execution by both Parties ("Effective Date") and continue through June 30, 2026. If the Agency does not complete the Project within this time period, this Agreement will expire unless an extension of the time period is requested by the Agency and granted in writing by the Department prior to the expiration of this Agreement. Expiration of this Agreement will be considered termination of the Project. The cost of any work performed prior to the Effective Date or after the expiration date of this Agreement will not be reimbursed by the Department.

a. __ If this box is checked the following provision applies:

Unless terminated earlier, work on the Project shall commence no later than the __ day of __, or within __ days of the issuance of the Notice to Proceed for the construction phase of the Project (if the Project involves construction), whichever date is earlier. The Department shall have the option to immediately terminate this Agreement should the Agency fail to meet the above-required dates.

7. Amendments, Extensions, and Assignment. This Agreement may be amended or extended upon mutual written agreement of the Parties. This Agreement shall not be renewed. This Agreement shall not be assigned, transferred, or otherwise encumbered by the Agency under any circumstances without the prior written consent of the Department.

8. Termination or Suspension of Project. The Department may, by written notice to the Agency, suspend any or all of the Department's obligations under this Agreement for the Agency's failure to comply with applicable law or the terms of this Agreement until such time as the event or condition resulting in such suspension has ceased or been corrected.

a. Notwithstanding any other provision of this Agreement, if the Department intends to terminate the Agreement, the Department shall notify the Agency of such termination in writing at least thirty (30) days prior to the termination of the Agreement, with instructions to the effective date of termination or specify the stage of work at which the Agreement is to be terminated.

b. The Parties to this Agreement may terminate this Agreement when its continuation would not produce beneficial results commensurate with the further expenditure of funds. In this event, the Parties shall agree upon the termination conditions.

c. If the Agreement is terminated before performance is completed, the Agency shall be paid only for that work satisfactorily performed for which costs can be substantiated. Such payment, however, may not exceed the equivalent percentage of the Department's maximum financial assistance. If any portion of the Project is located on the Department's right-of-way, then all work in progress on the Department right-of-way will become the property of the Department and will be turned over promptly by the Agency.

d. In the event the Agency fails to perform or honor the requirements and provisions of this Agreement, the Agency shall promptly refund in full to the Department within thirty (30) days of the termination of the Agreement any funds that were determined by the Department to have been expended in violation of the Agreement.

Docusign Envelope ID: EBFDF60F-F2EE-4305-9C90-D6E520CBD296

e. The Department reserves the right to unilaterally cancel this Agreement for failure by the Agency to comply with the Public Records provisions of Chapter 119, Florida Statutes.

9. Project Cost:

a. The estimated total cost of the Project is $250,000. This amount is based upon **Exhibit "B", Schedule of Financial Assistance**. The timeline for deliverables and distribution of estimated amounts between deliverables within a grant phase, as outlined in **Exhibit "B", Schedule of Financial Assistance**, may be modified by mutual written agreement of the Parties and does not require execution of an **Amendment to the Public Transportation Grant Agreement**. The timeline for deliverables and distribution of estimated amounts between grant phases requires an amendment executed by both Parties in the same form as this Agreement.

b. The Department agrees to participate in the Project cost up to the maximum amount of $200,000 and, the Department's participation in the Project shall not exceed 80.00% of the total eligible cost of the Project, and as more fully described in **Exhibit "B'', Schedule of Financial Assistance**. The Agency agrees to bear all expenses in excess of the amount of the Department's participation and any cost overruns or deficits involved.

10. Compensation and Payment:

a. Eligible Cost. The Department shall reimburse the Agency for allowable costs incurred as described in **Exhibit "A"**, **Project Description and Responsibilities**, and as set forth in **Exhibit "B", Schedule of Financial Assistance**.

b. Deliverables. The Agency shall provide quantifiable, measurable, and verifiable units of deliverables. Each deliverable must specify the required minimum level of service to be performed and the criteria for evaluating successful completion. The Project and the quantifiable, measurable, and verifiable units of deliverables are described more fully in **Exhibit "A", Project Description and Responsibilities**. Modifications to the deliverables in **Exhibit "A", Project Description and Responsibilities** requires a formal written amendment.

c. Invoicing. Invoices shall be submitted no more often than monthly by the Agency in detail sufficient for a proper pre-audit and post-audit, based on the quantifiable, measurable, and verifiable deliverables as established in **Exhibit "A", Project Description and Responsibilities**. Deliverables and costs incurred must be received and approved by the Department prior to reimbursement. Requests for reimbursement by the Agency shall include an invoice, progress report, and supporting documentation for the deliverables being billed that are acceptable to the Department. The Agency shall use the format for the invoice and progress report that is approved by the Department.

d. Supporting Documentation. Supporting documentation must establish that the deliverables were received and accepted in writing by the Agency and must also establish that the required minimum standards or level of service to be performed based on the criteria for evaluating successful completion as specified in **Exhibit "A", Project Description and Responsibilities** has been met. All costs invoiced shall be supported by properly executed payrolls, time records, invoices, contracts, or vouchers evidencing in proper detail the nature and propriety of charges as described in **Exhibit "F", Contract Payment Requirements**.

e. Travel Expenses. The selected provision below is controlling regarding travel expenses:

X Travel expenses are NOT eligible for reimbursement under this Agreement.

__ Travel expenses ARE eligible for reimbursement under this Agreement. Bills for travel expenses specifically authorized in this Agreement shall be submitted on the Department's

Docusign Envelope ID: EBFDF60F-F2EE-4305-9C90-D6E520CBD296

Contractor Travel Form No. 300-000-06 and will be paid in accordance with Section 112.061, Florida Statutes, and the most current version of the Department's Disbursement Handbook for Employees and Managers.

f. Financial Consequences. Payment shall be made only after receipt and approval of deliverables and costs incurred unless advance payments are authorized by the Chief Financial Officer of the State of Florida under Chapters 215 and 216, Florida Statutes, or the Department's Comptroller under Section 334.044(29), Florida Statutes. If the Department determines that the performance of the Agency is unsatisfactory, the Department shall notify the Agency of the deficiency to be corrected, which correction shall be made within a time-frame to be specified by the Department. The Agency shall, within thirty (30) days after notice from the Department, provide the Department with a corrective action plan describing how the Agency will address all issues of contract non-performance, unacceptable performance, failure to meet the minimum performance levels, deliverable deficiencies, or contract non-compliance. If the corrective action plan is unacceptable to the Department, the Agency will not be reimbursed. If the deficiency is subsequently resolved, the Agency may bill the Department for the amount that was previously not reimbursed during the next billing period. If the Agency is unable to resolve the deficiency, the funds shall be forfeited at the end of the Agreement's term.

g. Invoice Processing. An Agency receiving financial assistance from the Department should be aware of the following time frames. Inspection or verification and approval of deliverables shall take no longer than 20 days from the Department's receipt of the invoice. The Department has 20 days to deliver a request for payment (voucher) to the Department of Financial Services. The 20 days are measured from the latter of the date the invoice is received or the deliverables are received, inspected or verified, and approved.

If a payment is not available within 40 days, a separate interest penalty at a rate as established pursuant to Section 55.03(1), Florida Statutes, will be due and payable, in addition to the invoice amount, to the Agency. Interest penalties of less than one (1) dollar will not be enforced unless the Agency requests payment. Invoices that have to be returned to an Agency because of Agency preparation errors will result in a delay in the payment. The invoice payment requirements do not start until a properly completed invoice is provided to the Department.

A Vendor Ombudsman has been established within the Department of Financial Services. The duties of this individual include acting as an advocate for Agency who may be experiencing problems in obtaining timely payment(s) from a state agency. The Vendor Ombudsman may be contacted at (850) 413-5516.

h. Records Retention. The Agency shall maintain an accounting system or separate accounts to ensure funds and projects are tracked separately. Records of costs incurred under the terms of this Agreement shall be maintained and made available upon request to the Department at all times during the period of this Agreement and for five years after final payment is made. Copies of these records shall be furnished to the Department upon request. Records of costs incurred include the Agency's general accounting records and the Project records, together with supporting documents and records, of the Contractor and all subcontractors performing work on the Project, and all other records of the Contractor and subcontractors considered necessary by the Department for a proper audit of costs.

i. Progress Reports. Upon request, the Agency agrees to provide progress reports to the Department in the standard format used by the Department and at intervals established by the Department. The Department will be entitled at all times to be advised, at its request, as to the status of the Project and of details thereof.

Docusign Envelope ID: EBFDF60F-F2EE-4305-9C90-D6E520CBD296

j. Submission of Other Documents. The Agency shall submit to the Department such data, reports, records, contracts, and other documents relating to the Project as the Department may require as listed in **Exhibit "E", Program Specific Terms and Conditions** attached to and incorporated into this Agreement.

k. Offsets for Claims. If, after Project completion, any claim is made by the Department resulting from an audit or for work or services performed pursuant to this Agreement, the Department may offset such amount from payments due for work or services done under any agreement that it has with the Agency owing such amount if, upon written demand, payment of the amount is not made within 60 days to the Department. Offsetting any amount pursuant to this paragraph shall not be considered a breach of contract by the Department.

l. Final Invoice. The Agency must submit the final invoice on the Project to the Department within 120 days after the completion of the Project. Invoices submitted after the 120-day time period may not be paid.

m. Department's Performance and Payment Contingent Upon Annual Appropriation by the Legislature. The Department's performance and obligation to pay under this Agreement is contingent upon an annual appropriation by the Legislature. If the Department's funding for this Project is in multiple fiscal years, a notice of availability of funds from the Department's project manager must be received prior to costs being incurred by the Agency. See **Exhibit "B", Schedule of Financial Assistance** for funding levels by fiscal year. Project costs utilizing any fiscal year funds are not eligible for reimbursement if incurred prior to funds approval being received. The Department will notify the Agency, in writing, when funds are available.

n. Limits on Contracts Exceeding $25,000 and Term more than 1 Year. In the event this Agreement is in excess of $25,000 and has a term for a period of more than one year, the provisions of Section 339.135(6)(a), Florida Statutes, are hereby incorporated:

> "The Department, during any fiscal year, shall not expend money, incur any liability, or enter into any contract which, by its terms, involves the expenditure of money in excess of the amounts budgeted as available for expenditure during such fiscal year. Any contract, verbal or written, made in violation of this subsection is null and void, and no money may be paid on such contract. The Department shall require a statement from the comptroller of the Department that funds are available prior to entering into any such contract or other binding commitment of funds. Nothing herein contained shall prevent the making of contracts for periods exceeding 1 year, but any contract so made shall be executory only for the value of the services to be rendered or agreed to be paid for in succeeding fiscal years; and this paragraph shall be incorporated verbatim in all contracts of the Department which are for an amount in excess of $25,000 and which have a term for a period of more than 1 year."

o. Agency Obligation to Refund Department. Any Project funds made available by the Department pursuant to this Agreement that are determined by the Department to have been expended by the Agency in violation of this Agreement or any other applicable law or regulation shall be promptly refunded in full to the Department. Acceptance by the Department of any documentation or certifications, mandatory or otherwise permitted, that the Agency files shall not constitute a waiver of the Department's rights as the funding agency to verify all information at a later date by audit or investigation.

p. Non-Eligible Costs. In determining the amount of the payment, the Department will exclude all Project costs incurred by the Agency prior to the execution of this Agreement, costs incurred after the expiration of the Agreement, costs that are not provided for in **Exhibit "A"**, **Project**

Docusign Envelope ID: EBFDF60F-F2EE-4305-9C90-D6E520CBD296

Description and Responsibilities, and as set forth in **Exhibit "B", Schedule of Financial Assistance**, costs agreed to be borne by the Agency or its contractors and subcontractors for not meeting the Project commencement and final invoice time lines, and costs attributable to goods or services received under a contract or other arrangement that has not been approved in writing by the Department. Specific unallowable costs may be listed in **Exhibit "A"**, **Project Description and Responsibilities.**

11. **General Requirements.** The Agency shall complete the Project with all practical dispatch in a sound, economical, and efficient manner, and in accordance with the provisions in this Agreement and all applicable laws.

    a. **Necessary Permits Certification.** The Agency shall certify to the Department that the Agency's design consultant and/or construction contractor has secured the necessary permits.

    b. **Right-of-Way Certification.** If the Project involves construction, then the Agency shall provide to the Department certification and a copy of appropriate documentation substantiating that all required right-of-way necessary for the Project has been obtained. Certification is required prior to authorization for advertisement for or solicitation of bids for construction of the Project, even if no right-of-way is required.

    c. **Notification Requirements When Performing Construction on Department's Right-of-Way.** In the event the cost of the Project is greater than $250,000.00, and the Project involves construction on the Department's right-of-way, the Agency shall provide the Department with written notification of either its intent to:

        i. Require the construction work of the Project that is on the Department's right-of-way to be performed by a Department prequalified contractor, or

        ii. Construct the Project utilizing existing Agency employees, if the Agency can complete said Project within the time frame set forth in this Agreement.

    d. __ If this box is checked, then the Agency is permitted to utilize its own forces and the following provision applies: **Use of Agency Workforce.** In the event the Agency proceeds with any phase of the Project utilizing its own forces, the Agency will only be reimbursed for direct costs (this excludes general overhead).

    e. __ If this box is checked, then the Agency is permitted to utilize **Indirect Costs: Reimbursement for Indirect Program Expenses** (select one):

        i. __ Agency has selected to seek reimbursement from the Department for actual indirect expenses (no rate).

        ii. __ Agency has selected to apply a de minimus rate of 10% to modified total direct costs. Note: The de minimus rate is available only to entities that have never had a negotiated indirect cost rate. When selected, the de minimus rate must be used consistently for all federal awards until such time the agency chooses to negotiate a rate. A cost policy statement and de minimis certification form must be submitted to the Department for review and approval.

        iii. __ Agency has selected to apply a state or federally approved indirect cost rate. A federally approved rate agreement or indirect cost allocation plan (ICAP) must be submitted annually.

    f. **Agency Compliance with Laws, Rules, and Regulations, Guidelines, and Standards.** The Agency shall comply and require its contractors and subcontractors to comply with all terms

Docusign Envelope ID: EBFDF60F-F2EE-4305-9C90-D6E520CBD296

and conditions of this Agreement and all federal, state, and local laws and regulations applicable to this Project.

g. **Claims and Requests for Additional Work.** The Agency shall have the sole responsibility for resolving claims and requests for additional work for the Project. The Agency will make best efforts to obtain the Department's input in its decisions. The Department is not obligated to reimburse for claims or requests for additional work.

12. Contracts of the Agency:

a. **Approval of Third Party Contracts.** The Department specifically reserves the right to review and approve any and all third party contracts with respect to the Project before the Agency executes or obligates itself in any manner requiring the disbursement of Department funds, including consultant and purchase of commodities contracts, or amendments thereto. If the Department chooses to review and approve third party contracts for this Project and the Agency fails to obtain such approval, that shall be sufficient cause for nonpayment by the Department. The Department specifically reserves unto itself the right to review the qualifications of any consultant or contractor and to approve or disapprove the employment of the same. If Federal Transit Administration (FTA) funds are used in the Project, the Department must exercise the right to third party contract review.

b. **Procurement of Commodities or Contractual Services.** It is understood and agreed by the Parties hereto that participation by the Department in a project with the Agency, where said project involves the purchase of commodities or contractual services where purchases or costs exceed the Threshold Amount for CATEGORY TWO per Section 287.017, Florida Statutes, is contingent on the Agency complying in full with the provisions of Section 287.057, Florida Statutes. The Agency's Authorized Official shall certify to the Department that the Agency's purchase of commodities or contractual services has been accomplished in compliance with Section 287.057, Florida Statutes. It shall be the sole responsibility of the Agency to ensure that any obligations made in accordance with this Section comply with the current threshold limits. Contracts, purchase orders, task orders, construction change orders, or any other agreement that would result in exceeding the current budget contained in **Exhibit "B", Schedule of Financial Assistance**, or that is not consistent with the Project description and scope of services contained in **Exhibit "A", Project Description and Responsibilities** must be approved by the Department prior to Agency execution. Failure to obtain such approval, and subsequent execution of an amendment to the Agreement if required, shall be sufficient cause for nonpayment by the Department, in accordance with this Agreement.

c. **Consultants' Competitive Negotiation Act.** It is understood and agreed by the Parties to this Agreement that participation by the Department in a project with the Agency, where said project involves a consultant contract for professional services, is contingent on the Agency's full compliance with provisions of Section 287.055, Florida Statutes, Consultants' Competitive Negotiation Act. In all cases, the Agency's Authorized Official shall certify to the Department that selection has been accomplished in compliance with the Consultants' Competitive Negotiation Act.

d. **Disadvantaged Business Enterprise (DBE) Policy and Obligation.** It is the policy of the Department that DBEs, as defined in 49 C.F.R. Part 26, as amended, shall have the opportunity to participate in the performance of contracts financed in whole or in part with Department funds under this Agreement. The DBE requirements of applicable federal and state laws and regulations apply to this Agreement. The Agency and its contractors agree to ensure that DBEs have the opportunity to participate in the performance of this Agreement. In this regard, all recipients and contractors shall take all necessary and reasonable steps in accordance with applicable federal and state laws and regulations to ensure that the DBEs have the opportunity to compete for and perform contracts. The Agency and its contractors

Docusign Envelope ID: EBFDF60F-F2EE-4305-9C90-D6E520CBD296

and subcontractors shall not discriminate on the basis of race, color, national origin or sex in the award and performance of contracts, entered pursuant to this Agreement.

13. **Maintenance Obligations**. In the event the Project includes construction or the acquisition of commodities then the following provisions are incorporated into this Agreement:

    a. The Agency agrees to accept all future maintenance and other attendant costs occurring after completion of the Project for all improvements constructed or commodities acquired as part of the Project. The terms of this provision shall survive the termination of this Agreement.

14. **Sale, Transfer, or Disposal of Department-funded Property:**

    a. The Agency will not sell or otherwise transfer or dispose of any part of its title or other interests in real property, facilities, or equipment funded in any part by the Department under this Agreement without prior written approval by the Department.

    b. If a sale, transfer, or disposal by the Agency of all or a portion of Department-funded real property, facilities, or equipment is approved by the Department, the following provisions will apply:

        i. The Agency shall reimburse the Department a proportional amount of the proceeds of the sale of any Department-funded property.

        ii. The proportional amount shall be determined on the basis of the ratio of the Department funding of the development or acquisition of the property multiplied against the sale amount, and shall be remitted to the Department within ninety (90) days of closing of sale.

        iii. Sale of property developed or acquired with Department funds shall be at market value as determined by appraisal or public bidding process, and the contract and process for sale must be approved in advance by the Department.

        iv. If any portion of the proceeds from the sale to the Agency are non-cash considerations, reimbursement to the Department shall include a proportional amount based on the value of the non-cash considerations.

    c. The terms of provisions “a” and “b” above shall survive the termination of this Agreement.

        i. The terms shall remain in full force and effect throughout the useful life of facilities developed, equipment acquired, or Project items installed within a facility, but shall not exceed twenty (20) years from the effective date of this Agreement.

        ii. There shall be no limit on the duration of the terms with respect to real property acquired with Department funds.

15. **Single Audit.** The administration of Federal or State resources awarded through the Department to the Agency by this Agreement may be subject to audits and/or monitoring by the Department. The following requirements do not limit the authority of the Department to conduct or arrange for the conduct of additional audits or evaluations of Federal awards or State financial assistance or limit the authority of any state agency inspector general, the State of Florida Auditor General, or any other state official. The Agency shall comply with all audit and audit reporting requirements as specified below.

    Federal Funded:

    a. In addition to reviews of audits conducted in accordance with 2 CFR Part 200, Subpart F – Audit Requirements, monitoring procedures may include but not be limited to on-site visits by

Docusign Envelope ID: EBFDF60F-F2EE-4305-9C90-D6E520CBD296

Department staff and/or other procedures, including reviewing any required performance and financial reports, following up, ensuring corrective action, and issuing management decisions on weaknesses found through audits when those findings pertain to Federal awards provided through the Department by this Agreement. By entering into this Agreement, the Agency agrees to comply and cooperate fully with any monitoring procedures/processes deemed appropriate by the Department. The Agency further agrees to comply and cooperate with any inspections, reviews, investigations, or audits deemed necessary by the Department, State of Florida Chief Financial Officer (CFO), or State of Florida Auditor General.

b. The Agency, a non-Federal entity as defined by 2 CFR Part 200, Subpart F – Audit Requirements, as a subrecipient of a Federal award awarded by the Department through this Agreement, is subject to the following requirements:

i. In the event the Agency expends a total amount of Federal awards equal to or in excess of the threshold established by 2 CFR Part 200, Subpart F – Audit Requirements, the Agency must have a Federal single or program-specific audit conducted for such fiscal year in accordance with the provisions of 2 CFR Part 200, Subpart F – Audit Requirements. **Exhibit "H", Audit Requirements for Awards of Federal Financial Assistance**, to this Agreement provides the required Federal award identification information needed by the Agency to further comply with the requirements of 2 CFR Part 200, Subpart F – Audit Requirements. In determining Federal awards expended in a fiscal year, the Agency must consider all sources of Federal awards based on when the activity related to the Federal award occurs, including the Federal award provided through the Department by this Agreement. The determination of amounts of Federal awards expended should be in accordance with the guidelines established by 2 CFR Part 200, Subpart F – Audit Requirements. An audit conducted by the State of Florida Auditor General in accordance with the provisions of 2 CFR Part 200, Subpart F – Audit Requirements, will meet the requirements of this part.

ii. In connection with the audit requirements, the Agency shall fulfill the requirements relative to the auditee responsibilities as provided in 2 CFR Part 200, Subpart F – Audit Requirements.

iii. In the event the Agency expends less than the threshold established by 2 CFR Part 200, Subpart F – Audit Requirements, in Federal awards, the Agency is exempt from Federal audit requirements for that fiscal year. However, the Agency must provide a single audit exemption statement to the Department at FDOTSingleAudit@dot.state.fl.us no later than nine months after the end of the Agency's audit period for each applicable audit year. In the event the Agency expends less than the threshold established by 2 CFR Part 200, Subpart F – Audit Requirements, in Federal awards in a fiscal year and elects to have an audit conducted in accordance with the provisions of 2 CFR Part 200, Subpart F – Audit Requirements, the cost of the audit must be paid from non-Federal resources (*i.e.*, the cost of such an audit must be paid from the Agency's resources obtained from other than Federal entities).

iv. The Agency must electronically submit to the Federal Audit Clearinghouse (FAC) at https://harvester.census.gov/facweb/ the audit reporting package as required by 2 CFR Part 200, Subpart F – Audit Requirements, within the earlier of 30 calendar days after receipt of the auditor's report(s) or nine months after the end of the audit period. The FAC is the repository of record for audits required by 2 CFR Part 200, Subpart F – Audit Requirements. However, the Department requires a copy of the audit reporting package also be submitted to FDOTSingleAudit@dot.state.fl.us within the earlier of 30 calendar days after receipt of the auditor's report(s) or nine months after the end of the audit period as required by 2 CFR Part 200, Subpart F – Audit Requirements.

Docusign Envelope ID: EBFDF60F-F2EE-4305-9C90-D6E520CBD296

v. Within six months of acceptance of the audit report by the FAC, the Department will review the Agency's audit reporting package, including corrective action plans and management letters, to the extent necessary to determine whether timely and appropriate action on all deficiencies has been taken pertaining to the Federal award provided through the Department by this Agreement. If the Agency fails to have an audit conducted in accordance with 2 CFR Part 200, Subpart F – Audit Requirements, the Department may impose additional conditions to remedy noncompliance. If the Department determines that noncompliance cannot be remedied by imposing additional conditions, the Department may take appropriate actions to enforce compliance, which actions may include but not be limited to the following:

1. Temporarily withhold cash payments pending correction of the deficiency by the Agency or more severe enforcement action by the Department;
2. Disallow (deny both use of funds and any applicable matching credit for) all or part of the cost of the activity or action not in compliance;
3. Wholly or partly suspend or terminate the Federal award;
4. Initiate suspension or debarment proceedings as authorized under 2 C.F.R. Part 180 and Federal awarding agency regulations (or in the case of the Department, recommend such a proceeding be initiated by the Federal awarding agency);
5. Withhold further Federal awards for the Project or program;
6. Take other remedies that may be legally available.

vi. As a condition of receiving this Federal award, the Agency shall permit the Department or its designee, the CFO, or State of Florida Auditor General access to the Agency's records, including financial statements, the independent auditor's working papers, and project records as necessary. Records related to unresolved audit findings, appeals, or litigation shall be retained until the action is complete or the dispute is resolved.

vii. The Department's contact information for requirements under this part is as follows:

Office of Comptroller, MS 24
605 Suwannee Street
Tallahassee, Florida 32399-0450
FDOTSingleAudit@dot.state.fl.us

State Funded:

a. In addition to reviews of audits conducted in accordance with Section 215.97, Florida Statutes, monitoring procedures to monitor the Agency's use of state financial assistance may include but not be limited to on-site visits by Department staff and/or other procedures, including reviewing any required performance and financial reports, following up, ensuring corrective action, and issuing management decisions on weaknesses found through audits when those findings pertain to state financial assistance awarded through the Department by this Agreement. By entering into this Agreement, the Agency agrees to comply and cooperate fully with any monitoring procedures/processes deemed appropriate by the Department. The Agency further agrees to comply and cooperate with any inspections, reviews, investigations, or audits deemed necessary by the Department, the Department of Financial Services (DFS), or State of Florida Auditor General.

b. The Agency, a "nonstate entity" as defined by Section 215.97, Florida Statutes, as a recipient of state financial assistance awarded by the Department through this Agreement, is subject to the following requirements:

Docusign Envelope ID: EBFDF60F-F2EE-4305-9C90-D6E520CBD296

i. In the event the Agency meets the audit threshold requirements established by Section 215.97, Florida Statutes, the Agency must have a State single or project-specific audit conducted for such fiscal year in accordance with Section 215.97, Florida Statutes; applicable rules of the Department of Financial Services; and Chapters 10.550 (local governmental entities) or 10.650 (nonprofit and for-profit organizations), Rules of the Auditor General. **Exhibit "G", Audit Requirements for Awards of State Financial Assistance,** to this Agreement indicates state financial assistance awarded through the Department by this Agreement needed by the Agency to further comply with the requirements of Section 215.97, Florida Statutes. In determining the state financial assistance expended in a fiscal year, the Agency shall consider all sources of state financial assistance, including state financial assistance received from the Department by this Agreement, other state agencies, and other nonstate entities. State financial assistance does not include Federal direct or pass-through awards and resources received by a nonstate entity for Federal program matching requirements.

ii. In connection with the audit requirements, the Agency shall ensure that the audit complies with the requirements of Section 215.97(8), Florida Statutes. This includes submission of a financial reporting package as defined by Section 215.97(2)(e), Florida Statutes, and Chapters 10.550 (local governmental entities) or 10.650 (nonprofit and for-profit organizations), Rules of the Auditor General.

iii. In the event the Agency does not meet the audit threshold requirements established by Section 215.97, Florida Statutes, the Agency is exempt for such fiscal year from the state single audit requirements of Section 215.97, Florida Statutes. However, the Agency must provide a single audit exemption statement to the Department at FDOTSingleAudit@dot.state.fl.us no later than nine months after the end of the Agency's audit period for each applicable audit year. In the event the Agency does not meet the audit threshold requirements established by Section 215.97, Florida Statutes, in a fiscal year and elects to have an audit conducted in accordance with the provisions of Section 215.97, Florida Statutes, the cost of the audit must be paid from the Agency's resources (*i.e.*, the cost of such an audit must be paid from the Agency's resources obtained from other than State entities).

iv. In accordance with Chapters 10.550 (local governmental entities) or 10.650 (nonprofit and for-profit organizations), Rules of the Auditor General, copies of financial reporting packages required by this Agreement shall be submitted to:

Florida Department of Transportation
Office of Comptroller, MS 24
605 Suwannee Street
Tallahassee, Florida 32399-0405
FDOTSingleAudit@dot.state.fl.us

And

State of Florida Auditor General
Local Government Audits/342
111 West Madison Street, Room 401
Tallahassee, FL 32399-1450
Email: flaudgen_localgovt@aud.state.fl.us

v. Any copies of financial reporting packages, reports, or other information required to be submitted to the Department shall be submitted timely in accordance with Section 215.97, Florida Statutes, and Chapters 10.550 (local governmental entities) or 10.650 (nonprofit and for-profit organizations), Rules of the Auditor General, as

Docusign Envelope ID: EBFDF60F-F2EE-4305-9C90-D6E520CBD296

applicable.

vi. The Agency, when submitting financial reporting packages to the Department for audits done in accordance with Chapters 10.550 (local governmental entities) or 10.650 (nonprofit and for-profit organizations), Rules of the Auditor General, should indicate the date the reporting package was delivered to the Agency in correspondence accompanying the reporting package.

vii. Upon receipt, and within six months, the Department will review the Agency's financial reporting package, including corrective action plans and management letters, to the extent necessary to determine whether timely and appropriate corrective action on all deficiencies has been taken pertaining to the state financial assistance provided through the Department by this Agreement. If the Agency fails to have an audit conducted consistent with Section 215.97, Florida Statutes, the Department may take appropriate corrective action to enforce compliance.

viii. As a condition of receiving state financial assistance, the Agency shall permit the Department or its designee, DFS, or the Auditor General access to the Agency's records, including financial statements, the independent auditor's working papers, and project records as necessary. Records related to unresolved audit findings, appeals, or litigation shall be retained until the action is complete or the dispute is resolved.

c. The Agency shall retain sufficient records demonstrating its compliance with the terms of this Agreement for a period of five years from the date the audit report is issued and shall allow the Department or its designee, DFS, or State of Florida Auditor General access to such records upon request. The Agency shall ensure that the audit working papers are made available to the Department or its designee, DFS, or State of Florida Auditor General upon request for a period of five years from the date the audit report is issued, unless extended in writing by the Department.

16. Notices and Approvals. Notices and approvals referenced in this Agreement must be obtained in writing from the Parties' respective Administrators or their designees.

17. Restrictions, Prohibitions, Controls and Labor Provisions:

a. Convicted Vendor List. A person or affiliate who has been placed on the convicted vendor list following a conviction for a public entity crime may not submit a bid on a contract to provide any goods or services to a public entity; may not submit a bid on a contract with a public entity for the construction or repair of a public building or public work; may not submit bids on leases of real property to a public entity; may not be awarded or perform work as a contractor, supplier, subcontractor, or consultant under a contract with any public entity; and may not transact business with any public entity in excess of the threshold amount provided in Section 287.017, Florida Statutes, for CATEGORY TWO for a period of 36 months from the date of being placed on the convicted vendor list.

b. Discriminatory Vendor List. In accordance with Section 287.134, Florida Statutes, an entity or affiliate who has been placed on the Discriminatory Vendor List, kept by the Florida Department of Management Services, may not submit a bid on a contract to provide goods or services to a public entity; may not submit a bid on a contract with a public entity for the construction or repair of a public building or public work; may not submit bids on leases of real property to a public entity; may not be awarded or perform work as a contractor, supplier, subcontractor, or consultant under a contract with any public entity; and may not transact business with any public entity.

Docusign Envelope ID: EBFDF60F-F2EE-4305-9C90-D6E520CBD296

c. Non-Responsible Contractors. An entity or affiliate who has had its Certificate of Qualification suspended, revoked, denied, or have further been determined by the Department to be a non-responsible contractor, may not submit a bid or perform work for the construction or repair of a public building or public work on a contract with the Agency.

d. Prohibition on Using Funds for Lobbying. No funds received pursuant to this Agreement may be expended for lobbying the Florida Legislature, judicial branch, or any state agency, in accordance with Section 216.347, Florida Statutes.

e. Unauthorized Aliens. The Department shall consider the employment by any contractor of unauthorized aliens a violation of Section 274A(e) of the Immigration and Nationality Act. If the contractor knowingly employs unauthorized aliens, such violation will be cause for unilateral cancellation of this Agreement.

f. Procurement of Construction Services. If the Project is procured pursuant to Chapter 255, Florida Statutes, for construction services and at the time of the competitive solicitation for the Project, 50 percent or more of the cost of the Project is to be paid from state-appropriated funds, then the Agency must comply with the requirements of Section 255.0991, Florida Statutes.

g. E-Verify. The Agency shall:

i. Utilize the U.S. Department of Homeland Security's E-Verify system to verify the employment eligibility of all new employees hired by the Agency during the term of the contract; and

ii. Expressly require any subcontractors performing work or providing services pursuant to the state contract to likewise utilize the U.S. Department of Homeland Security's E-Verify system to verify the employment eligibility of all new employees hired by the subcontractor during the contract term.

h. Projects with Non-profit Organizations. Pursuant to Section 216.1366. Florida Statutes, if the Agency is a nonprofit organization as defined in Section 215.97(2)(m), Florida Statutes, the Agency shall provide documentation to indicate the amount of state funds:

i. Allocated to be used during the full term of this Agreement for remuneration to any member of the board of directors or an officer of the Agency

ii. Allocated under each payment by the Department to be used for remuneration of any member of the board of directors or an officer of the Agency. The documentation must indicate the amounts and recipients of the remuneration.

Such information will be posted by the Department to the Florida Accountability Contract Tracking System maintained pursuant to Section 215.985, F.S., and must additionally be posted to the Agency's website, if the Agency is a non-profit organization and maintains a website. The Agency shall utilize the Department's Form 350-090-19, Compensation to Non-Profits Using State Funds, for purposes of documenting the compensation. The subject Form is required for every contract for services executed, amended, or extended on or after July 1, 2023, with non-profit organizations.

Pursuant to Section 216.1366, F.S., the term:

iii. "Officer" means a chief executive officer, chief financial officer, chief operating officer, or any other position performing and equivalent function.

iv. "Remuneration" means all compensation earned by or awarded to personnel, whether paid or accrued, regardless of contingency, including bonuses, accrued paid time off,

Docusign Envelope ID: EBFDF60F-F2EE-4305-9C90-D6E520CBD296

severance payments, incentive payments, contributions to a retirement plan or in-kind payments, reimbursements, or allowances for moving expenses, vehicles and other transportation, telephone services, medical services, housing and meals.

v. "State Funds" means funds paid from the General Revenue Fund or any state trust fund, funds allocated by the Federal Government and distributed by the state, or funds appropriated by the Federal Government and distributed by the state, or funds appropriated by the state fo distribution through any grant program. The term does not include funds used for the Medicaid program.

i. Design Services and Construction Engineering and Inspection Services. If the Project is wholly or partially funded by the Department and administered by a local governmental entity, except for a seaport listed in Section 311.09, Florida Statutes, or an airport as defined in Section 332.004, Florida Statutes, the entity performing design and construction engineering and inspection services may not be the same entity.

18. Indemnification and Insurance:

a. It is specifically agreed between the Parties executing this Agreement that it is not intended by any of the provisions of any part of this Agreement to create in the public or any member thereof, a third party beneficiary under this Agreement, or to authorize anyone not a party to this Agreement to maintain a suit for personal injuries or property damage pursuant to the terms or provisions of this Agreement. The Agency guarantees the payment of all just claims for materials, supplies, tools, or labor and other just claims against the Agency or any subcontractor, in connection with this Agreement. Additionally, to the extent permitted by law and as limited by and pursuant to the provisions of Section 768.28, Florida Statutes, the Agency shall indemnify, defend, and hold harmless the State of Florida, Department of Transportation, including the Department's officers and employees, from liabilities, damages, losses, and costs, including, but not limited to, reasonable attorney's fees, to the extent caused by the negligence, recklessness, or intentional wrongful misconduct of the Agency and persons employed or utilized by the Agency in the performance of this Agreement. Nothing contained in this paragraph is intended to nor shall it constitute a waiver of the Department's or the Agency's sovereign immunity. Nothing contained in this paragraph is intended to nor shall it constitute a waiver of the Department's or the Agency's sovereign immunity. This indemnification shall survive the termination of this Agreement. Additionally, the Agency agrees to include the following indemnification in all contracts with contractors/subcontractors and consultants/subconsultants who perform work in connection with this Agreement:

"To the fullest extent permitted by law, the Agency's contractor/consultant shall indemnify, defend, and hold harmless the Agency and the State of Florida, Department of Transportation, including the Department's officers and employees, from liabilities, damages, losses and costs, including, but not limited to, reasonable attorney's fees, to the extent caused by the negligence, recklessness or intentional wrongful misconduct of the contractor/consultant and persons employed or utilized by the contractor/consultant in the performance of this Agreement.

This indemnification shall survive the termination of this Agreement."

b. The Agency shall provide Workers' Compensation Insurance in accordance with Florida's Workers' Compensation law for all employees. If subletting any of the work, ensure that the subcontractor(s) and subconsultant(s) have Workers' Compensation Insurance for their employees in accordance with Florida's Workers' Compensation law. If using "leased employees" or employees obtained through professional employer organizations ("PEO's"), ensure that such employees are covered by Workers' Compensation Insurance through the PEO's or other leasing entities. Ensure that any equipment rental agreements that include

Docusign Envelope ID: EBFDF60F-F2EE-4305-9C90-D6E520CBD296

operators or other personnel who are employees of independent contractors, sole proprietorships, or partners are covered by insurance required under Florida's Workers' Compensation law.

c. If the Agency elects to self-perform the Project, then the Agency may self-insure. If the Agency elects to hire a contractor or consultant to perform the Project, then the Agency shall carry, or cause its contractor or consultant to carry, Commercial General Liability insurance providing continuous coverage for all work or operations performed under this Agreement. Such insurance shall be no more restrictive than that provided by the latest occurrence form edition of the standard Commercial General Liability Coverage Form (ISO Form CG 00 01) as filed for use in the State of Florida. The Agency shall cause, or cause its contractor or consultant to cause, the Department to be made an Additional Insured as to such insurance. Such coverage shall be on an "occurrence" basis and shall include Products/Completed Operations coverage. The coverage afforded to the Department as an Additional Insured shall be primary as to any other available insurance and shall not be more restrictive than the coverage afforded to the Named Insured. The limits of coverage shall not be less than $1,000,000 for each occurrence and not less than a $5,000,000 annual general aggregate, inclusive of amounts provided by an umbrella or excess policy. The limits of coverage described herein shall apply fully to the work or operations performed under the Agreement, and may not be shared with or diminished by claims unrelated to the Agreement. The policy/ies and coverage described herein may be subject to a deductible and such deductibles shall be paid by the Named Insured. No policy/ies or coverage described herein may contain or be subject to a Retention or a Self-Insured Retention unless the Agency is a state agency or subdivision of the State of Florida that elects to self-perform the Project. Prior to the execution of the Agreement, and at all renewal periods which occur prior to final acceptance of the work, the Department shall be provided with an ACORD Certificate of Liability Insurance reflecting the coverage described herein. The Department shall be notified in writing within ten days of any cancellation, notice of cancellation, lapse, renewal, or proposed change to any policy or coverage described herein. The Department's approval or failure to disapprove any policy/ies, coverage, or ACORD Certificates shall not relieve or excuse any obligation to procure and maintain the insurance required herein, nor serve as a waiver of any rights or defenses the Department may have.

d. When the Agreement includes the construction of a railroad grade crossing, railroad overpass or underpass structure, or any other work or operations within the limits of the railroad right-of-way, including any encroachments thereon from work or operations in the vicinity of the railroad right-of-way, the Agency shall, or cause its contractor to, in addition to the insurance coverage required above, procure and maintain Railroad Protective Liability Coverage (ISO Form CG 00 35) where the railroad is the Named Insured and where the limits are not less than $2,000,000 combined single limit for bodily injury and/or property damage per occurrence, and with an annual aggregate limit of not less than $6,000,000. The railroad shall also be added along with the Department as an Additional Insured on the policy/ies procured pursuant to the paragraph above. Prior to the execution of the Agreement, and at all renewal periods which occur prior to final acceptance of the work, both the Department and the railroad shall be provided with an ACORD Certificate of Liability Insurance reflecting the coverage described herein. The insurance described herein shall be maintained through final acceptance of the work. Both the Department and the railroad shall be notified in writing within ten days of any cancellation, notice of cancellation, renewal, or proposed change to any policy or coverage described herein. The Department's approval or failure to disapprove any policy/ies, coverage, or ACORD Certificates shall not relieve or excuse any obligation to procure and maintain the insurance required herein, nor serve as a waiver of any rights the Department may have.

e. When the Agreement involves work on or in the vicinity of utility-owned property or facilities, the utility shall be added along with the Department as an Additional Insured on the Commercial General Liability policy/ies procured above.

Docusign Envelope ID: EBFDF60F-F2EE-4305-9C90-D6E520CBD296

19. Miscellaneous:

a. Environmental Regulations. The Agency will be solely responsible for compliance with all applicable environmental regulations and for any liability arising from non-compliance with these regulations, and will reimburse the Department for any loss incurred in connection therewith.

b. Non-Admission of Liability. In no event shall the making by the Department of any payment to the Agency constitute or be construed as a waiver by the Department of any breach of covenant or any default which may then exist on the part of the Agency and the making of such payment by the Department, while any such breach or default shall exist, shall in no way impair or prejudice any right or remedy available to the Department with respect to such breach or default.

c. Severability. If any provision of this Agreement is held invalid, the remainder of this Agreement shall not be affected. In such an instance, the remainder would then continue to conform to the terms and requirements of applicable law.

d. Agency not an agent of Department. The Agency and the Department agree that the Agency, its employees, contractors, subcontractors, consultants, and subconsultants are not agents of the Department as a result of this Agreement.

e. Bonus or Commission. By execution of the Agreement, the Agency represents that it has not paid and, also agrees not to pay, any bonus or commission for the purpose of obtaining an approval of its application for the financing hereunder.

f. Non-Contravention of State Law. Nothing in the Agreement shall require the Agency to observe or enforce compliance with any provision or perform any act or do any other thing in contravention of any applicable state law. If any of the provisions of the Agreement violate any applicable state law, the Agency will at once notify the Department in writing so that appropriate changes and modifications may be made by the Department and the Agency to the end that the Agency may proceed as soon as possible with the Project.

g. Execution of Agreement. This Agreement may be executed in one or more counterparts, each of which shall be deemed an original, but all of which shall constitute the same Agreement. A facsimile or electronic transmission of this Agreement with a signature on behalf of a party will be legal and binding on such party.

h. Federal Award Identification Number (FAIN). If the FAIN is not available prior to execution of the Agreement, the Department may unilaterally add the FAIN to the Agreement without approval of the Agency and without an amendment to the Agreement. If this occurs, an updated Agreement that includes the FAIN will be provided to the Agency and uploaded to the Department of Financial Services' Florida Accountability Contract Tracking System (FACTS).

i. Inspector General Cooperation. The Agency agrees to comply with Section 20.055(5), Florida Statutes, and to incorporate in all subcontracts the obligation to comply with Section 20.055(5), Florida Statutes.

j. Law, Forum, and Venue. This Agreement shall be governed by and construed in accordance with the laws of the State of Florida. In the event of a conflict between any portion of the contract and Florida law, the laws of Florida shall prevail. The Agency agrees to waive forum and venue and that the Department shall determine the forum and venue in which any dispute under this Agreement is decided.

IN WITNESS WHEREOF, the Parties have executed this Agreement on the day and year written above.

Docusign Envelope ID: EBFDF60F-F2EE-4305-9C90-D6E520CBD296

AGENCY City of Winter Haven

By: _____

Name: _____

Title: _____

STATE OF FLORIDA, DEPARTMENT OF TRANSPORTATION

By: _____

Name: Nicole E. Mills, P.E.

Title: Director of Transportation Development

STATE OF FLORIDA, DEPARTMENT OF TRANSPORTATION
Legal Review:

Don Conway, Senior Attorney (as to form and legality)

DS
DC

Docusign Envelope ID: EBFDF60F-F2EE-4305-9C90-D6E520CBD296

EXHIBIT A

Project Description and Responsibilities

A. Project Description (description of Agency's project to provide context, description of project components funded via this Agreement (if not the entire project)): Winter Haven Airport Replace Beacon & PAPI Units

B. Project Location (limits, city, county, map): Winter Haven Regional Airport/Winter Haven, FL/Polk

C. Project Scope (allowable costs: describe project components, improvement type/service type, approximate timeline, project schedule, project size): As required by 215.971, F.S., this scope of work includes but is not limited to consultant and design fees; survey and geotechnical costs; construction inspection and material testing costs; mobilization and demobilization; and the purchase, relocation, refurbishment, or upgrade of NAVAIDs. Procurement and installation of new NAVAIDs include purchase, delivery, site work, electrical work, coordination with necessary agencies, permitting, testing, and commissioning of the new NAVAID. The relocation project includes the costs associated with the removal and relocation of said NAVAID; earthwork and electrical work of the new site; restoration of the previous site; coordination with all necessary agencies; permitting; testing, and the commissioning of the relocated NAVAID. Refurbishment, enhancement, and upgrades include the cost of new parts, repairs, modification to the existing NAVAID, permitting, coordination with necessary agencies, testing, and the commissioning of the modified NAVAID. All NAVAID projects include the materials, equipment, labor, and incidentals required to complete a NAVAID project. The Sponsor will comply with Aviation Program Assurances.

D. Deliverable(s):

The project scope identifies the ultimate project deliverables. Deliverables for requisition, payment and invoice purposes will be the incremental progress made toward completion of project scope elements. Supporting documentation will be quantifiable, measurable, and verifiable, to allow for a determination of the amount of incremental progress that has been made, and provide evidence that the payment requested is commensurate with the accomplished incremental progress and costs incurred by the Agency.

E. Unallowable Costs (including but not limited to):

F. Transit Operating Grant Requirements (Transit Only):

Transit Operating Grants billed as an operational subsidy will require an expenditure detail report from the Agency that matches the invoice period. The expenditure detail, along with the progress report, will be the required deliverables for Transit Operating Grants. Operating grants may be issued for a term not to exceed three years from execution. The original grant agreement will include funding for year one. Funding for years two and three will be added by amendment as long as the grantee has submitted all invoices on schedule and the project deliverables for the year have been met.

Docusign Envelope ID: EBFDF60F-F2EE-4305-9C90-D6E520CBD296



Docusign Envelope ID: EBFDF60F-F2EE-4305-9C90-D6E520CBD296

EXHIBIT B

Schedule of Financial Assistance

FUNDS AWARDED TO THE AGENCY AND REQUIRED MATCHING FUNDS PURSUANT TO THIS AGREEMENT CONSIST OF THE FOLLOWING:

A. Fund Type and Fiscal Year:

Financial Management Number	Fund Type	FLAIR Category	State Fiscal Year	Object Code	CSFA/ CFDA Number	CSFA/CFDA Title or Funding Source Description	Funding Amount
451944-1-94-01	DPTO	088719	2025	751000	55.004	Aviation Grant Program	$200,000.00
451944-1-94-01	LF	088719	2025	751000	55.004	Aviation Grant Program	$50,000.00
	Total Financial Assistance						$250,000.00

B. Estimate of Project Costs by Grant Phase:

Phases*	State	Local	Federal	Totals	State %	Local %	Federal %
Land Acquisition	$0.00	$0.00	$0.00	$0.00	0.00	0.00	0.00
Planning	$0.00	$0.00	$0.00	$0.00	0.00	0.00	0.00
Environmental/Design/Construction	$200,000.00	$50,000.00	$0.00	$250,000.00	80.00	20.00	0.00
Capital Equipment/ Preventative Maintenance	$0.00	$0.00	$0.00	$0.00	0.00	0.00	0.00
Match to Direct Federal Funding	$0.00	$0.00	$0.00	$0.00	0.00	0.00	0.00
Mobility Management (Transit Only)	$0.00	$0.00	$0.00	$0.00	0.00	0.00	0.00
Totals	$200,000.00	$50,000.00	$0.00	$250,000.00			

*Shifting items between these grant phases requires execution of an Amendment to the Public Transportation Grant Agreement.

Scope Code and/or Activity Line Item (ALI) (Transit Only)	

BUDGET/COST ANALYSIS CERTIFICATION AS REQUIRED BY SECTION 216.3475, FLORIDA STATUTES:

I certify that the cost for each line item budget category (grant phase) has been evaluated and determined to be allowable, reasonable, and necessary as required by Section 216.3475, Florida Statutes. Documentation is on file evidencing the methodology used and the conclusions reached.

Jennifer Gaona, MPA

Department Grant Manager Name

DocuSigned by:
Jennifer Gaona
23A088B28A0DD44D...

Signature

02/17/2025 | 2:47 PM EST

Date

Docusign Envelope ID: EBFDF60F-F2EE-4305-9C90-D6E520CBD296

EXHIBIT C

TERMS AND CONDITIONS OF CONSTRUCTION

1. Design and Construction Standards and Required Approvals.

a. The Agency understands that it is responsible for the preparation and certification of all design plans for the Project. The Agency shall hire a qualified consultant for the design phase of the Project or, if applicable, the Agency shall require their design-build contractor or construction management contractor to hire a qualified consultant for the design phase of the Project.

b. Execution of this Agreement by both Parties shall be deemed a Notice to Proceed to the Agency for the design phase or other non-construction phases of the Project. If the Project involves a construction phase, the Agency shall not begin the construction phase of the Project until the Department issues a Notice to Proceed for the construction phase. Prior to commencing the construction work described in this Agreement, the Agency shall request a Notice to Proceed from the Department's Project Manager, Jennifer Gaona, MPA (email: jennifer.gaona@dot.state.fl.us) or from an appointed designee. Any construction phase work performed prior to the execution of this required Notice to Proceed is not subject to reimbursement.

c. The Agency will provide one (1) copy of the final design plans and specifications and final bid documents to the Department's Project Manager prior to bidding or commencing construction of the Project.

d. The Agency shall require the Agency's contractor to post a payment and performance bond in accordance with applicable law(s).

e. The Agency shall be responsible to ensure that the construction work under this Agreement is performed in accordance with the approved construction documents, and that the construction work will meet all applicable Agency and Department standards.

f. Upon completion of the work authorized by this Agreement, the Agency shall notify the Department in writing of the completion of construction of the Project; and for all design work that originally required certification by a Professional Engineer, this notification shall contain an Engineer's Certification of Compliance, signed and sealed by a Professional Engineer, the form of which is attached to this Exhibit. The certification shall state that work has been completed in compliance with the Project construction plans and specifications. If any deviations are found from the approved plans or specifications, the certification shall include a list of all deviations along with an explanation that justifies the reason to accept each deviation.

2. Construction on the Department's Right of Way. If the Project involves construction on the Department's right-of-way, then the following provisions apply to any and all portions of the Project that are constructed on the Department's right-of-way:

a. The Agency shall hire a qualified contractor using the Agency's normal bid procedures to perform the construction work for the Project. The Agency must certify that the installation of the Project is completed by a Contractor prequalified by the Department as required by Section 2 of the Standard Specifications for Road and Bridge Construction (2016), as amended, unless otherwise approved by the Department in writing or the Contractor exhibits past project experience in the last five years that are comparable in scale, composition, and overall quality to the site characterized within the scope of services of this Project.

Docusign Envelope ID: EBFDF60F-F2EE-4305-9C90-D6E520CBD296

b. Construction Engineering Inspection (CEI) services will be provided by the Agency by hiring a Department prequalified consultant firm including one individual that has completed the Advanced Maintenance of Traffic Level Training, unless otherwise approved by the Department in writing. The CEI staff shall be present on the Project at all times that the contractor is working. Administration of the CEI staff shall be under the responsible charge of a State of Florida Licensed Professional Engineer who shall provide the certification that all design and construction for the Project meets the minimum construction standards established by Department. The Department shall approve all CEI personnel. The CEI firm shall not be the same firm as that of the Engineer of Record for the Project. The Department shall have the right, but not the obligation, to perform independent assurance testing during the course of construction of the Project. Notwithstanding the foregoing, the Department may issue a written waiver of the CEI requirement for portions of Projects involving the construction of bus shelters, stops, or pads.

c. The Project shall be designed and constructed in accordance with the latest edition of the Department's Standard Specifications for Road and Bridge Construction, the Department Design Standards, and the Manual of Uniform Traffic Control Devices (MUTCD). The following guidelines shall apply as deemed appropriate by the Department: the Department Structures Design Manual, AASHTO Guide Specifications for the Design of Pedestrian Bridges, AASHTO LRFD Bridge Design Specifications, Florida Design Manual, Manual for Uniform Minimum Standards for Design, Construction and Maintenance for Streets and Highways (the "Florida Green Book"), and the Department Traffic Engineering Manual. The Agency will be required to submit any construction plans required by the Department for review and approval prior to any work being commenced. Should any changes to the plans be required during construction of the Project, the Agency shall be required to notify the Department of the changes and receive approval from the Department prior to the changes being constructed. The Agency shall maintain the area of the Project at all times and coordinate any work needs of the Department during construction of the Project.

d. The Agency shall notify the Department a minimum of 48 hours before beginning construction within Department right-of-way. The Agency shall notify the Department should construction be suspended for more than 5 working days. The Department contact person for construction is __.

e. The Agency shall be responsible for monitoring construction operations and the maintenance of traffic (MOT) throughout the course of the Project in accordance with the latest edition of the Department Standard Specifications, section 102. The Agency is responsible for the development of a MOT plan and making any changes to that plan as necessary. The MOT plan shall be in accordance with the latest version of the Department Design Standards, Index 600 series. Any MOT plan developed by the Agency that deviates from the Department Design Standards must be signed and sealed by a professional engineer. MOT plans will require approval by the Department prior to implementation.

f. The Agency shall be responsible for locating all existing utilities, both aerial and underground, and for ensuring that all utility locations be accurately documented on the construction plans. All utility conflicts shall be fully resolved directly with the applicable utility.

g. The Agency will be responsible for obtaining all permits that may be required by other agencies or local governmental entities.

h. It is hereby agreed by the Parties that this Agreement creates a permissive use only and all improvements located on the Department's right-of-way resulting from this Agreement shall become the property of the Department. Neither the granting of the permission to use the Department right of way nor the placing of facilities upon the Department property shall operate to create or vest any property right to or in the Agency, except as may otherwise be provided in separate agreements. The Agency shall not acquire any right, title, interest or

Docusign Envelope ID: EBFDF60F-F2EE-4305-9C90-D6E520CBD296

estate in Department right of way, of any nature or kind whatsoever, by virtue of the execution, operation, effect, or performance of this Agreement including, but not limited to, the Agency's use, occupancy or possession of Department right of way. The Parties agree that this Agreement does not, and shall not be construed to, grant credit for any future transportation concurrency requirements pursuant to Chapter 163, F.S.

i. The Agency shall not cause any liens or encumbrances to attach to any portion of the Department's property, including but not limited to, the Department's right-of-way.

j. The Agency shall perform all required testing associated with the design and construction of the Project. Testing results shall be made available to the Department upon request. The Department shall have the right to perform its own independent testing during the course of the Project.

k. The Agency shall exercise the rights granted herein and shall otherwise perform this Agreement in a good and workmanlike manner, with reasonable care, in accordance with the terms and provisions of this Agreement and all applicable federal, state, local, administrative, regulatory, safety and environmental laws, codes, rules, regulations, policies, procedures, guidelines, standards and permits, as the same may be constituted and amended from time to time, including, but not limited to, those of the Department, applicable Water Management District, Florida Department of Environmental Protection, the United States Environmental Protection Agency, the United States Army Corps of Engineers, the United States Coast Guard and local governmental entities.

l. If the Department determines a condition exists which threatens the public's safety, the Department may, at its discretion, cause construction operations to cease and immediately have any potential hazards removed from its right-of-way at the sole cost, expense, and effort of the Agency. The Agency shall bear all construction delay costs incurred by the Department.

m. The Agency shall be responsible to maintain and restore all features that might require relocation within the Department right-of-way.

n. The Agency will be solely responsible for clean up or restoration required to correct any environmental or health hazards that may result from construction operations.

o. The acceptance procedure will include a final "walk-through" by Agency and Department personnel. Upon completion of construction, the Agency will be required to submit to the Department final as-built plans and an engineering certification that construction was completed in accordance to the plans. Submittal of the final as-built plans shall include one complete set of the signed and sealed plans on 11" X 17" plan sheets and an electronic copy prepared in Portable Document Format (PDF). Prior to the termination of this Agreement, the Agency shall remove its presence, including, but not limited to, all of the Agency's property, machinery, and equipment from Department right-of-way and shall restore those portions of Department right of way disturbed or otherwise altered by the Project to substantially the same condition that existed immediately prior to the commencement of the Project.

p. If the Department determines that the Project is not completed in accordance with the provisions of this Agreement, the Department shall deliver written notification of such to the Agency. The Agency shall have thirty (30) days from the date of receipt of the Department's written notice, or such other time as the Agency and the Department mutually agree to in writing, to complete the Project and provide the Department with written notice of the same (the "Notice of Completion"). If the Agency fails to timely deliver the Notice of Completion, or if it is determined that the Project is not properly completed after receipt of the Notice of Completion, the Department, within its discretion may: 1) provide the Agency with written authorization granting such additional time as the Department deems appropriate to correct the deficiency(ies); or 2) correct the deficiency(ies) at the Agency's sole cost and expense,

Docusign Envelope ID: EBFDF60F-F2EE-4305-9C90-D6E520CBD296

without Department liability to the Agency for any resulting loss or damage to property, including, but not limited to, machinery and equipment. If the Department elects to correct the deficiency(ies), the Department shall provide the Agency with an invoice for the costs incurred by the Department and the Agency shall pay the invoice within thirty (30) days of the date of the invoice.

q. The Agency shall implement best management practices for erosion and pollution control to prevent violation of state water quality standards. The Agency shall be responsible for the correction of any erosion, shoaling, or water quality problems that result from the construction of the Project.

r. Portable Traffic Monitoring Site (PTMS) or a Telemetry Traffic Monitoring Site (TTMS) may exist within the vicinity of your proposed work. It is the responsibility of the Agency to locate and avoid damage to these sites. If a PTMS or TTMS is encountered during construction, the Department must be contacted immediately.

s. During construction, highest priority must be given to pedestrian safety. If permission is granted to temporarily close a sidewalk, it should be done with the express condition that an alternate route will be provided, and shall continuously maintain pedestrian features to meet Americans Disability Act (ADA) standards.

t. Restricted hours of operation will be as follows, unless otherwise approved by the Department's District Construction Engineer or designee (insert hours and days of the week for restricted operation):

u. Lane closures on the state road system must be coordinated with the Public Information Office at least two weeks prior to the closure. The contact information for the Department's Public Information Office is:

Insert District PIO contact info:

Note: (Highlighted sections indicate need to confirm information with District Office or appropriate DOT person managing the Agreement)

3. **Engineer's Certification of Compliance.** The Agency shall complete and submit and if applicable Engineer's Certification of Compliance to the Department upon completion of the construction phase of the Project.

Docusign Envelope ID: EBFDF60F-F2EE-4305-9C90-D6E520CBD296

ENGINEER'S CERTIFICATION OF COMPLIANCE

PUBLIC TRANSPORTATION GRANT AGREEMENT
BETWEEN
THE STATE OF FLORIDA, DEPARTMENT OF TRANSPORTATION
and _____

PROJECT DESCRIPTION: _____

DEPARTMENT CONTRACT NO.: _____

FINANCIAL MANAGEMENT NO.: _____

In accordance with the Terms and Conditions of the Public Transportation Grant Agreement, the undersigned certifies that all work which originally required certification by a Professional Engineer has been completed in compliance with the Project construction plans and specifications. If any deviations have been made from the approved plans, a list of all deviations, along with an explanation that justifies the reason to accept each deviation, will be attached to this Certification. Also, with submittal of this certification, the Agency shall furnish the Department a set of "as-built" plans for construction on the Department's Right of Way certified by the Engineer of Record/CEI.

By: _____, P.E.

SEAL:

Name: _____

Date: _____

Docusign Envelope ID: EBFDF60F-F2EE-4305-9C90-D6E520CBD296

EXHIBIT D

AGENCY RESOLUTION

PLEASE SEE ATTACHED

Docusign Envelope ID: EBFDF60F-F2EE-4305-9C90-D6E520CBD296

EXHIBIT E

PROGRAM SPECIFIC TERMS AND CONDITIONS - AVIATION
AVIATION PROGRAM ASSURANCES

A. General.

1. The assurances herein shall form an integral part of the Agreement between the Department and the Agency.

2. These assurances delineate the obligations of the Parties to this Agreement to ensure their commitment and compliance with specific provisions of **Exhibit "A", Project Description and Responsibilities**, and **Exhibit "B", Schedule of Financial Assistance**, as well as serving to protect public investment in public-use airports and the continued viability of the Florida Aviation System.

3. The Agency shall comply with the assurances as specified in this Agreement.

4. The terms and assurances of this Agreement shall remain in full force and effect throughout the useful life of a facility developed; equipment acquired; or Project items installed within a facility for an airport development or noise compatibility program project, but shall not exceed 20 years from the effective date of this Agreement.

5. There shall be no limit on the duration of the terms and assurances of this Agreement regarding Exclusive Rights and Airport Revenue so long as the property is used as a public airport.

6. There shall be no limit on the duration of the terms and assurances of this Agreement with respect to real property acquired with funds provided by this Agreement.

7. Subject to appropriations, the Department shall continue to comply with its financial commitment to this Project under the terms of this Agreement, until such time as the Department may determine that the Agency has failed to comply with the terms and assurances of this Agreement.

8. An Agency that has been determined by the Department to have failed to comply with either the terms of these Assurances, or the terms of the Agreement, or both, shall be notified, in writing, by the Department, identifying the specifics of the non-compliance and any corrective action by the Agency to remedy the failure.

9. Failure by the Agency to satisfactorily remedy the non-compliance shall absolve the Department's continued financial commitment to this Project and immediately require the Agency to repay the Department the full amount of funds expended by the Department on this Project.

10. Any history of failure to comply with the terms and assurances of an Agreement will jeopardize the Agency's eligibility for further state funding of airport projects by the Department.

B. Agency Compliance Certification.

1. General Certification. The Agency hereby certifies, with respect to this Project, it will comply, within its authority, with all applicable, current laws and rules of the State of Florida and applicable local governments, as well as Department policies, guidelines, and requirements, including but not limited to, the following (latest version of each document):

a. Florida Statutes (F.S.)

- Chapter 163, F.S., Intergovernmental Programs
- Chapter 329, F.S., Aircraft: Title; Liens; Registration; Liens
- Chapter 330, F.S., Regulation of Aircraft, Pilots, and Airports
- Chapter 331, F.S., Aviation and Aerospace Facilities and Commerce
- Chapter 332, F.S., Airports and Other Air Navigation Facilities
- Chapter 333, F.S., Airport Zoning

Docusign Envelope ID: EBFDF60F-F2EE-4305-9C90-D6E520CBD296

b. Florida Administrative Code (FAC)

- Chapter 73C-41, FAC, Community Planning; Governing the Procedure for the Submittal and Review of Local Government Comprehensive Plans and Amendments
- Chapter 14-60, FAC, Airport Licensing, Registration, and Airspace Protection
- Section 62-256.300, FAC, Open Burning, Prohibitions
- Section 62-701.320(13), FAC, Solid Waste Management Facility Permit Requirements, General, Airport Safety

c. Local Government Requirements

- Airport Zoning Ordinance
- Local Comprehensive Plan

d. Department Requirements

- Eight Steps of Building a New Airport
- Florida Airport Revenue Use Guide
- Florida Aviation Project Handbook
- Guidebook for Airport Master Planning
- Airport Compatible Land Use Guidebook

2. **Construction Certification.** The Agency hereby certifies, with respect to a construction-related project, that all design plans and specifications will comply with applicable federal, state, local, and professional standards, as well as Federal Aviation Administration (FAA) Advisory Circulars (AC's) and FAA issued waivers thereto, including but not limited to, the following:

a. Federal Requirements

- FAA AC 70/7460-1, Obstruction Marking and Lighting
- FAA AC 150/5300-13, Airport Design
- FAA AC 150/5370-2, Operational Safety on Airports During Construction
- FAA AC 150/5370-10, Standards for Specifying Construction of Airports

b. Local Government Requirements

- Local Building Codes
- Local Zoning Codes

c. Department Requirements

- Manual of Uniform Minimum Standards for Design, Construction and Maintenance for Streets and Highways (Commonly Referred to as the "Florida Green Book")
- Manual on Uniform Traffic Control Devices
- Section 14-60.007, FAC, Airfield Standards for Licensed Airports
- Standard Specifications for Construction of General Aviation Airports
- Design Guidelines & Minimum Standard Requirements for T-Hangar Projects

3. **Land Acquisition Certification.** The Agency hereby certifies, regarding land acquisition, that it will comply with applicable federal and/or state policies, regulations, and laws, including but not limited to the following:

a. Federal Requirements

- Uniform Relocation Assistance and Real Property Acquisition Policies Act of 1970
- National Environmental Policy of 1969
- FAA Order 5050.4, National Environmental Policy Act Implementing Instructions for Airport Projects
- FAA Order 5100.37B, Land Acquisition and Relocation Assistance for Airport Projects

b. Florida Requirements

- Chapter 73, F.S., Eminent Domain (re: Property Acquired Through Condemnation)
- Chapter 74, F.S., Proceedings Supplemental to Eminent Domain (re: Condemnation)
- Section 286.23, F.S., Public Business: Miscellaneous Provisions

Docusign Envelope ID: EBFDF60F-F2EE-4305-9C90-D6E520CBD296

C. Agency Authority.

1. **Legal Authority.** The Agency hereby certifies, with respect to this Agreement, that it has the legal authority to enter into this Agreement and commit to this Project; that a resolution, motion, or similar action has been duly adopted or passed as an official act of the airport sponsor's governing body authorizing this Agreement, including assurances contained therein, and directing and authorizing the person identified as the official representative of the governing body to act on its behalf with respect to this Agreement and to provide any additional information as may be required.

2. **Financial Authority.** The Agency hereby certifies, with respect to this Agreement, that it has sufficient funds available for that portion of the Project costs which are not paid by the U.S. Government or the State of Florida; that it has sufficient funds available to assure future operation and maintenance of items funded by this Project, which it will control; and that authority has been granted by the airport sponsor governing body to commit those funds to this Project.

D. Agency Responsibilities. The Agency hereby certifies it currently complies with or will comply with the following responsibilities:

1. **Accounting System.**

   a. The Agency shall create and maintain a separate account to document all of the financial transactions related to the airport as a distinct entity.

   b. The accounting records shall be kept by the Agency or its authorized representative in accordance with Generally Accepted Accounting Principles and in an accounting system that will facilitate an effective audit in accordance with the 2 CFR Part 200, Uniform Administrative Requirements, Cost Principles, and Audit Requirements for Federal Awards and Section 215.97, F.S., Florida Single Audit Act.

   c. The Department has the right to audit and inspect all financial records of the Agency upon reasonable notice.

2. **Good Title.**

   a. The Agency holds good title, satisfactory to the Department, to the airport or site thereof, or gives assurance, satisfactory to the Department, that good title will be obtained.

   b. For noise compatibility program projects undertaken on the airport sponsor's property, the Agency holds good title, satisfactory to the Department, to that portion of the property upon which state funds will be expended, or gives assurance, satisfactory to the Department, that good title will be obtained.

3. **Preserving Rights and Powers.**

   a. The Agency shall not take or permit any action which would operate to deprive it of any of the rights and powers necessary to perform any or all of the terms and assurances of this Agreement without the written approval of the Department. Further, the Agency shall act promptly to acquire, extinguish, or modify, in a manner acceptable to the Department, any outstanding rights or claims of right of others which would interfere with such performance by the Agency.

   b. If an arrangement is made for management and operation of the airport by any entity or person other than the Agency or an employee of the Agency, the Agency shall reserve sufficient rights and authority to ensure that the airport will be operated and maintained in accordance with the terms and assurances of this Agreement.

4. **Hazard Removal and Mitigation.**

Docusign Envelope ID: EBFDF60F-F2EE-4305-9C90-D6E520CBD296

a. For airport hazards located on airport controlled property, the Agency shall clear and protect terminal airspace required for instrument and visual operations at the airport (including established minimum flight altitudes) by removing, lowering, relocating, marking, or lighting or otherwise mitigating existing airport hazards and by preventing the establishment or creation of future airport hazards.

b. For airport hazards not located on airport controlled property, the Agency shall work in conjunction with the governing public authority or private land owner of the property to clear and protect terminal airspace required for instrument and visual operations at the airport (including established minimum flight altitudes) by removing, lowering, relocating, marking, or lighting or otherwise mitigating existing airport hazards and by preventing the establishment or creation of future airport hazards. The Agency may enter into an agreement with surrounding property owners or pursue available legal remedies to remove potential hazards to air navigation.

5. Airport Compatible Land Use.

a. The Agency assures that appropriate airport zoning ordinances are in place consistent with Section 333.03, F.S., or if not in place, that it will take appropriate action necessary to ensure local government adoption of an airport zoning ordinance or execution of an interlocal agreement with another local government body having an airport zoning ordinance, consistent with the provisions of Section 333.03, F.S.

b. The Agency assures that it will disapprove or oppose any attempted alteration or creation of objects, natural or man-made, dangerous to navigable airspace or that would adversely affect the current or future levels of airport operations.

c. The Agency assures that it will disapprove or oppose any attempted change in local land use development regulations that would adversely affect the current or future levels of airport operations by creation or expansion of airport incompatible land use areas.

6. Consistency with Local Government Plans.

a. The Agency assures the Project is consistent with the currently existing and planned future land use development plans approved by the local government having jurisdictional responsibility for the area surrounding the airport.

b. The Agency assures that it has given fair consideration to the interest of local communities and has had reasonable consultation with those parties affected by the Project.

c. The Agency shall consider and take appropriate actions, if deemed warranted by the Agency, to adopt the current, approved Airport Master Plan into the local government comprehensive plan.

7. Consistency with Airport Master Plan and Airport Layout Plan.

a. The Agency assures that the project, covered by the terms and assurances of this Agreement, is consistent with the most current Airport Master Plan.

b. The Agency assures that the Project, covered by the terms and assurances of this Agreement, is consistent with the most current, approved Airport Layout Plan (ALP), which shows:

1) The boundaries of the airport and all proposed additions thereto, together with the boundaries of all offsite areas owned or controlled by the Agency for airport purposes and proposed additions thereto;
2) The location and nature of all existing and proposed airport facilities and structures (such as runways, taxiways, aprons, terminal buildings, hangars, and roads), including all proposed extensions and reductions of existing airport facilities; and
3) The location of all existing and proposed non-aviation areas on airport property and of all existing improvements thereon.

Docusign Envelope ID: EBFDF60F-F2EE-4305-9C90-D6E520CBD296

c. The Agency assures that it will not make or permit any changes or alterations on the airport or any of its facilities that are not consistent with the Airport Master Plan and the Airport Layout Plan, as approved by the Department.

d. Original Airport Master Plans and Airport Layout Plans and each amendment, revision, or modification thereof, will be subject to the approval of the Department.

8. Airport Financial Plan.

a. The Agency assures that it will develop and maintain a cost-feasible Airport financial plan to accomplish the projects necessary to achieve the proposed airport improvements identified in the Airport Master Plan and depicted in the Airport Layout Plan, and any updates thereto. The Agency's Airport financial plan must comply with the following conditions:

1) The Airport financial plan will be a part of the Airport Master Plan.
2) The Airport financial plan will realistically assess project phasing considering availability of state and local funding and likelihood of federal funding under the FAA's priority system.
3) The Airport financial plan will not include Department funding for projects that are inconsistent with the local government comprehensive plan.

b. All Project cost estimates contained in the Airport financial plan shall be entered into and kept current in the Florida Aviation Database (FAD) Joint Automated Capital Improvement Program (JACIP) website.

9. Airport Revenue. The Agency assures that all revenue generated by the airport will be expended for capital improvement or operating costs of the airport; the local airport system; or other local facilities which are owned or operated by the owner or operator of the airport and which are directly and substantially related to the air transportation of passengers or property, or for environmental or noise mitigation purposes on or off the airport.

10. Fee and Rental Structure.

a. The Agency assures that it will maintain a fee and rental structure for facilities and services at the airport that it will make the airport as self-sustaining as possible under the circumstances existing at the particular airport.

b. If this Agreement results in a facility that will be leased or otherwise produce revenue, the Agency assures that the price charged for that facility will be based on the market value.

11. Public-Private Partnership for Aeronautical Uses.

a. If the airport owner or operator and a person or entity that owns an aircraft or an airport tenant or potential tenant agree that an aircraft hangar or tenant-specific facility, respectively, is to be constructed on airport property for aircraft storage or tenant use at the expense of the aircraft owner or tenant, the airport owner or operator may grant to the aircraft owner or tenant of the facility a lease that is subject to such terms and conditions on the facility as the airport owner or operator may impose, subject to approval by the Department.

b. The price charged for said lease will be based on market value, unless otherwise approved by the Department.

12. Economic Nondiscrimination.

a. The Agency assures that it will make the airport available as an airport for public use on reasonable terms without unjust discrimination to all types, kinds and classes of aeronautical activities, including commercial aeronautical activities offering services to the public.

1) The Agency may establish such reasonable, and not unjustly discriminatory, conditions to be met by all users of the airport as may be necessary for the safe and efficient operation of the airport.

Docusign Envelope ID: EBFDF60F-F2EE-4305-9C90-D6E520CBD296

2) The Agency may prohibit or limit any given type, kind or class of aeronautical use of the airport if such action is necessary for the safe operation of the airport or necessary to serve the civil aviation needs of the public.

b. The Agency assures that each airport Fixed-Based Operator (FBO) shall be subject to the same rates, fees, rentals, and other charges as are uniformly applicable to all other FBOs making the same or similar uses of such airport and utilizing the same or similar facilities.

13. Air and Water Quality Standards. The Agency assures that all projects involving airport location, major runway extension, or runway location will be located, designed, constructed, and operated so as to comply with applicable air and water quality standards.

14. Operations and Maintenance.

a. The Agency assures that the airport and all facilities, which are necessary to serve the aeronautical users of the airport, shall be operated at all times in a safe and serviceable condition and in accordance with the minimum standards as may be required or prescribed by applicable federal and state agencies for maintenance and operation, as well as minimum standards established by the Department for State of Florida licensing as a public-use airport.

1) The Agency assures that it will not cause or permit any activity or action thereon which would interfere with its use for airport purposes.
2) Except in emergency situations, any proposal to temporarily close the airport for non-aeronautical purposes must first be approved by the Department.
3) The Agency assures that it will have arrangements for promptly notifying airmen of any condition affecting aeronautical use of the airport.

b. Nothing contained herein shall be construed to require that the airport be operated for aeronautical use during temporary periods when adverse weather conditions interfere with safe airport operations.

15. Federal Funding Eligibility.

a. The Agency assures it will take appropriate actions to maintain federal funding eligibility for the airport and it will avoid any action that renders the airport ineligible for federal funding.

b. If the Agency becomes ineligible for federal funding of airport projects, such determination will render the Agency ineligible for state funding of airport projects.

16. Project Implementation.

a. The Agency assures that it will begin making expenditures or incurring obligations pertaining to this Project within one year after the effective date of this Agreement.

b. The Agency may request a one-year extension of this one-year time period, subject to approval by the Department District Secretary or designee.

c. Failure of the Agency to make expenditures, incur obligations or receive an approved extension may allow the Department to terminate this Agreement.

17. Exclusive Rights. The Agency assures that it will not permit any exclusive right for use of the airport by any person providing, or intending to provide, aeronautical services to the public.

18. Airfield Access.

a. The Agency assures that it will not grant or allow general easement or public access that opens onto or crosses the airport runways, taxiways, flight line, passenger facilities, or any area used for emergency

Docusign Envelope ID: EBFDF60F-F2EE-4305-9C90-D6E520CBD296

equipment, fuel, supplies, passengers, mail and freight, radar, communications, utilities, and landing systems, including but not limited to flight operations, ground services, emergency services, terminal facilities, maintenance, repair, or storage, except for those normal airport providers responsible for standard airport daily services or during special events at the airport open to the public with limited and controlled access.

b. The Agency assures that it will not grant or allow general easement or public access to any portion of the airfield from adjacent real property which is not owned, operated, or otherwise controlled by the Agency without prior Department approval.

19. Retention of Rights and Interests. The Agency will not sell, lease, encumber, or otherwise transfer or dispose of any part of its title or other interests in the real property shown as airport owned or controlled on the current airport layout plan without prior written approval by the Department. It will not sell, lease, encumber, terminate, waive, or otherwise transfer or dispose of any part of its title, rights, or other interest in existing noise easements or avigation easements on any property, airport or non-airport, without prior written approval by the Department. These assurances shall not limit the Agency's right to lease airport property for airport-compatible purposes.

20. Consultant, Contractor, Scope, and Costs.

a. The Department has the right to disapprove the Agency's employment of consultants, contractors, and subcontractors for all or any part of this Project if the specific consultants, contractors, or subcontractors have a record of poor project performance with the Department.

b. Further, the Department maintains the right to disapprove the proposed Project scope and cost of professional services.

21. Planning Projects. For all planning projects or other aviation studies, the Agency assures that it will:

a. Execute the project per the approved project narrative or with approved modifications.

b. Furnish the Department with such periodic project and work activity reports as indicated in the approved scope of services.

c. Make such project materials available for public review, unless exempt from public disclosure.

1) Information related to airport security is considered restricted information and is exempt from public dissemination per Sections 119.071(3) and 331.22 F.S.
2) No materials prepared under this Agreement shall be subject to copyright in the United States or any other country.

d. Grant the Department unrestricted authority to publish, disclose, distribute, and otherwise use any of the material prepared in connection with this Agreement.

e. If the Project involves developing an Airport Master Plan or an Airport Layout Plan, and any updates thereto, it will be consistent with provisions of the Florida Aviation System Plan, will identify reasonable future growth of the airport and the Agency will comply with the Department airport master planning guidebook, including:

1) Provide copies, in electronic and editable format, of final Project materials to the Department, including computer-aided drafting (CAD) files of the Airport Layout Plan.
2) Develop a cost-feasible financial plan, approved by the Department, to accomplish the projects described in the Airport Master Plan or depicted in the Airport Layout Plan, and any updates thereto. The cost-feasible financial plan shall realistically assess Project phasing considering availability of state and local funding and federal funding under the FAA's priority system.
3) Enter all projects contained in the cost-feasible plan in the Joint Automated Capital Improvement Program (JACIP).

Docusign Envelope ID: EBFDF60F-F2EE-4305-9C90-D6E520CBD296

f. The Agency understands and agrees that Department approval of this Agreement or any planning material developed as part of this Agreement does not constitute or imply any assurance or commitment on the part of the Department to approve any pending or future application for state aviation funding.

g. The Agency will submit master planning draft and final deliverables for Department and, if required, FAA approval prior to submitting any invoices to the Department for payment.

22. Land Acquisition Projects. For the purchase of real property, the Agency assures that it will:

a. Laws. Acquire the land in accordance with federal and/or state laws governing such action.

b. Administration. Maintain direct control of Project administration, including:

1) Maintain responsibility for all related contract letting and administrative procedures related to the purchase of real property.
2) Secure written Department approval to execute each agreement for the purchase of real property with any third party.
3) Ensure a qualified, State-certified general appraiser provides all necessary services and documentation.
4) Furnish the Department with a projected schedule of events and a cash flow projection within 20 calendar days after completion of the review appraisal.
5) Establish a Project account for the purchase of the land.
6) Collect and disburse federal, state, and local project funds.

c. Reimbursable Funds. If funding conveyed by this Agreement is reimbursable for land purchase in accordance with Chapter 332, F.S., the Agency shall comply with the following requirements:

1) The Agency shall apply for a FAA Airport Improvement Program grant for the land purchase within 60 days of executing this Agreement.
2) If federal funds are received for the land purchase, the Agency shall notify the Department, in writing, within 14 calendar days of receiving the federal funds and is responsible for reimbursing the Department within 30 calendar days to achieve normal project federal, state, and local funding shares per Chapter 332, F.S.
3) If federal funds are not received for the land purchase, the Agency shall reimburse the Department within 30 calendar days after the reimbursable funds are due in order to achieve normal project state and local funding shares as described in Chapter 332, F.S.
4) If federal funds are not received for the land purchase and the state share of the purchase is less than or equal to normal state and local funding shares per Chapter 332, F.S., when reimbursable funds are due, no reimbursement to the Department shall be required.

d. New Airport. If this Project involves the purchase of real property for the development of a new airport, the Agency assures that it will:

1) Apply for federal and state funding to construct a paved runway, associated aircraft parking apron, and connecting taxiway within one year of the date of land purchase.
2) Complete an Airport Master Plan within two years of land purchase.
3) Complete airport construction for basic operation within 10 years of land purchase.

e. Use of Land. The Agency assures that it shall use the land for aviation purposes in accordance with the terms and assurances of this Agreement within 10 years of acquisition.

f. Disposal of Land. For the disposal of real property the Agency assures that it will comply with the following:
1) For land purchased for airport development or noise compatibility purposes, the Agency shall, when the land is no longer needed for such purposes, dispose of such land at fair market value and/or make available to the Department an amount equal to the state's proportionate share of its market value.

Docusign Envelope ID: EBFDF60F-F2EE-4305-9C90-D6E520CBD296

2) Land will be considered to be needed for airport purposes under this assurance if:

a) It serves aeronautical purposes such as a runway protection zone or as a noise buffer.
b) Revenue from uses of such land contributes to airport financial self-sufficiency.

3) Disposition of land under Sections D.22.f.1. or D.22.f.2. of this Exhibit, above, shall be subject to retention or reservation of any interest or right therein needed to ensure such land will only be used for purposes compatible with noise levels related to airport operations.
4) Revenues from the sale of such land must be accounted for as outlined in Section D.1. of this Exhibit, and expended as outlined in Section D.9. of this Exhibit.

23. Construction Projects. The Agency assures that it will:

a. Project Certifications. Certify Project compliances, including:

1) Consultant and contractor selection comply with all applicable federal, state and local laws, rules, regulations, and policies.
2) All design plans and specifications comply with federal, state, and professional standards and applicable FAA advisory circulars, as well as the minimum standards established by the Department for State of Florida licensing as a public-use airport.
3) Completed construction complies with all applicable local building codes.
4) Completed construction complies with the Project plans and specifications with certification of that fact by the Project Engineer.

b. Design Development. For the plans, specifications, construction contract documents, and any and all other engineering, construction, and contractual documents produced by the Engineer, which are hereinafter collectively referred to as "plans", the Engineer will certify that:

1) The plans shall be developed in accordance with sound engineering and design principles, and with generally accepted professional standards.
2) The plans shall be consistent with the intent of the Project as defined in Exhibit A and Exhibit B of this Agreement.
3) The Project Engineer shall perform a review of the certification requirements listed in Section B.2. of this Exhibit, Construction Certification, and make a determination as to their applicability to this Project.
4) Development of the plans shall comply with all applicable laws, ordinances, zoning and permitting requirements, public notice requirements, and other similar regulations.

c. Inspection and Approval. The Agency assures that:

1) The Agency will provide and maintain competent technical supervision at the construction site throughout the Project to assure that the work conforms to the plans, specifications, and schedules approved by the Department, as applicable, for the Project.
2) The Agency assures that it will allow the Department to inspect the work and that it will provide any cost and progress reporting, as may be required by the Department.
3) The Agency assures that it will take the appropriate corrective action necessary, as required by the Department, for work which does not conform to the Department standards.

d. Pavement Preventive Maintenance. The Agency assures that for a project involving replacement or reconstruction of runway or taxiway pavement it has implemented an airport pavement maintenance management program and that it will use such program for the useful life of any pavement constructed, reconstructed, or repaired with state financial assistance at the airport.

Docusign Envelope ID: EBFDF60F-F2EE-4305-9C90-D6E520CBD296

24. Noise Mitigation Projects. The Agency assures that it will:

a. Government Agreements. For all noise compatibility projects that are carried out by another unit of local government or are on property owned by a unit of local government other than the Agency, the Agency shall enter into an agreement with that government body.

1) The local agreement, satisfactory to the Department, shall obligate the unit of local government to the same terms and assurances that apply to the Agency.
2) The Agency assures that it will take steps to enforce the local agreement if there is substantial non-compliance with the terms of the local agreement.

b. Private Agreements. For noise compatibility projects on privately owned property:

1) The Agency shall enter into an agreement with the owner of that property to exclude future actions against the airport.
2) The Agency assures that it will take steps to enforce such agreement if there is substantial non-compliance with the terms of the agreement.

- End of Exhibit E -

Docusign Envelope ID: EBFDF60F-F2EE-4305-9C90-D6E520CBD296

Exhibit E1

PROGRAM SPECIFIC TERMS AND CONDITIONS

(Prohibition on Discrimination Based on Health Care Choices)

This exhibit forms an integral part of the Agreement between the Department and the Agency.

1. **Statutory Reference.** Section 339.08, F.S. and Section 381.00316, F.S.

2. **Statutory Compliance.** Pursuant to Section 339.08, F.S., the Department may not expend state funds to support a project or program of certain entities if the entity is found to be in violation of Section 381.00316, F.S. The Department shall withhold state funds until the entity is found to be in compliance with Section 381.00316, F.S. This shall apply to any of the following entities:

    a. A public transit provider as defined in s. 341.031(1), F.S.;
    b. An authority created pursuant to chapter 343, F.S., chapter 348, F.S., or chapter 349, F.S.; c. A public-use airport as defined in s. 332.004, F.S.; or
    d. A port listed in s. 311.09(1), F.S.

- End of Exhibit E1 -

Docusign Envelope ID: EBFDF60F-F2EE-4305-9C90-D6E520CBD296

EXHIBIT F

Contract Payment Requirements
Florida Department of Financial Services, Reference Guide for State Expenditures
Cost Reimbursement Contracts

Invoices for cost reimbursement contracts must be supported by an itemized listing of expenditures by category (salary, travel, expenses, etc.). Supporting documentation shall be submitted for each amount for which reimbursement is being claimed indicating that the item has been paid. Documentation for each amount for which reimbursement is being claimed must indicate that the item has been paid. Check numbers may be provided in lieu of copies of actual checks. Each piece of documentation should clearly reflect the dates of service. Only expenditures for categories in the approved agreement budget may be reimbursed. These expenditures must be allowable (pursuant to law) and directly related to the services being provided.

Listed below are types and examples of supporting documentation for cost reimbursement agreements:

(1) Salaries: A payroll register or similar documentation should be submitted. The payroll register should show gross salary charges, fringe benefits, other deductions and net pay. If an individual for whom reimbursement is being claimed is paid by the hour, a document reflecting the hours worked times the rate of pay will be acceptable.

(2) Fringe Benefits: Fringe Benefits should be supported by invoices showing the amount paid on behalf of the employee (e.g., insurance premiums paid). If the contract specifically states that fringe benefits will be based on a specified percentage rather than the actual cost of fringe benefits, then the calculation for the fringe benefits amount must be shown.

Exception: Governmental entities are not required to provide check numbers or copies of checks for fringe benefits.

(3) Travel: Reimbursement for travel must be in accordance with Section 112.061, Florida Statutes, which includes submission of the claim on the approved State travel voucher or electronic means.

(4) Other direct costs: Reimbursement will be made based on paid invoices/receipts. If nonexpendable property is purchased using State funds, the contract should include a provision for the transfer of the property to the State when services are terminated. Documentation must be provided to show compliance with Department of Management Services Rule 60A-1.017, Florida Administrative Code, regarding the requirements for contracts which include services and that provide for the contractor to purchase tangible personal property as defined in Section 273.02, Florida Statutes, for subsequent transfer to the State.

(5) In-house charges: Charges which may be of an internal nature (e.g., postage, copies, etc.) may be reimbursed on a usage log which shows the units times the rate being charged. The rates must be reasonable.

(6) Indirect costs: If the contract specifies that indirect costs will be paid based on a specified rate, then the calculation should be shown.

Contracts between state agencies, and/or contracts between universities may submit alternative documentation to substantiate the reimbursement request that may be in the form of FLAIR reports or other detailed reports.

The Florida Department of Financial Services, online Reference Guide for State Expenditures can be found at this web address https://www.myfloridacfo.com/Division/AA/Manuals/documents/ReferenceGuideforStateExpenditures.pdf.

Docusign Envelope ID: EBFDF60F-F2EE-4305-9C90-D6E520CBD296

EXHIBIT G

AUDIT REQUIREMENTS FOR AWARDS OF STATE FINANCIAL ASSISTANCE

THE STATE RESOURCES AWARDED PURSUANT TO THIS AGREEMENT CONSIST OF THE FOLLOWING:

SUBJECT TO SECTION 215.97, FLORIDA STATUTES:~

Awarding Agency: Florida Department of Transportation
State Project Title: Aviation Grant Program
CSFA Number: 55.004
***Award Amount:** $200,000

*The award amount may change with amendments

Specific project information for CSFA Number 55.004 is provided at: https://apps.fldfs.com/fsaa/searchCatalog.aspx

COMPLIANCE REQUIREMENTS APPLICABLE TO STATE RESOURCES AWARDED PURSUANT TO THIS AGREEMENT:

State Project Compliance Requirements for CSFA Number 55.004 are provided at: https://apps.fldfs.com/fsaa/searchCompliance.aspx

The State Projects Compliance Supplement is provided at: https://apps.fldfs.com/fsaa/compliance.aspx

Docusign Envelope ID: EBFDF60F-F2EE-4305-9C90-D6E520CBD296

To: Jennifer.Gaona@dot.state.fl.us

FLORIDA DEPARTMENT OF TRANSPORTATION
FUNDS APPROVAL

G3982

2/11/2025

CONTRACT INFORMATION

Contract:	G3982
Contract Type:	GD - GRANT DISBURSEMENT (GRANT)
Method of Procurement:	G - GOVERMENTAL AGENCY (287.057,F.S.)
Vendor Name:	CITY OF WINTER HAVEN
Vendor ID:	F596000453027
Beginning Date of This Agreement:	02/10/2025
Ending Date of This Agreement:	06/30/2026
Contract Total/Budgetary Ceiling:	ct = $200,000.00
Description:	Winter Haven Airport Replace Beacon & PAPI Units

FUNDS APPROVAL INFORMATION

FUNDS APPROVED/REVIEWED FOR JASON ADANK, CPA, COMPTROLLER ON 2/11/2025

Action:	Original
Reviewed or Approved:	APPROVED
Organization Code:	55012020129
Expansion Option:	A8
Object Code:	751000
Amount:	$200,000.00
Financial Project:	45194419401
Work Activity (FCT):	215
CFDA:	
Fiscal Year:	2025
Budget Entity:	55100100
Category/Category Year:	088719/25
Amendment ID:	O001
Sequence:	00
User Assigned ID:	
Enc Line (6s)/Status:	0001/04

Total Amount: $200,000.00